Struktur eines Compilers

Carsten Gips (HSBI)

Unless otherwise noted, this work is licensed under CC BY-SA 4.0.

Sprachen verstehen, Texte transformieren

The cat runs quickly.

=> Struktur? Bedeutung?

Compiler: Big Picture

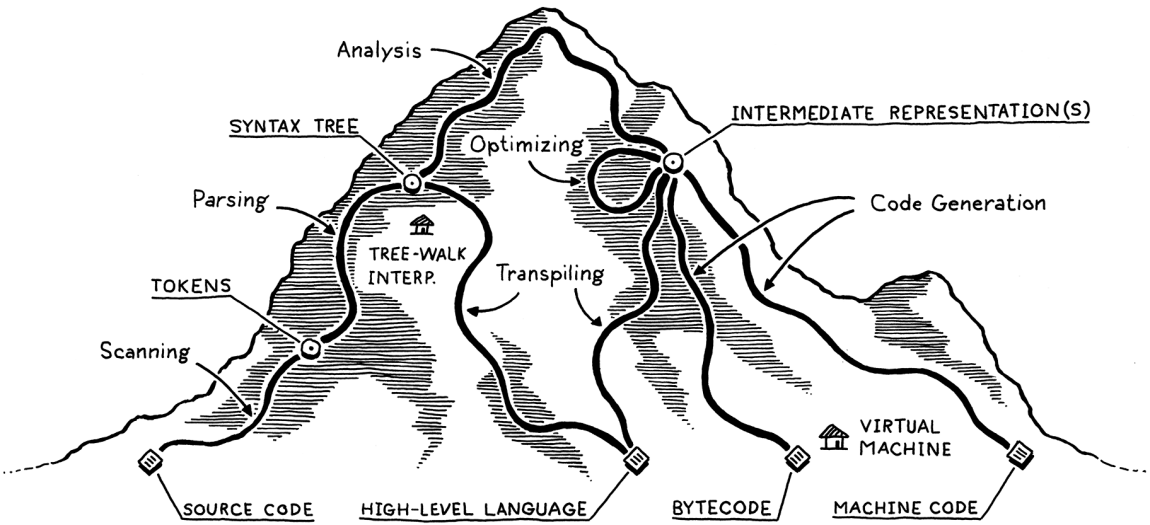

Quelle: A Map of the Territory (mountain.png) by Bob Nystrom on Github.com (MIT)

Compiler: Prinzipieller Aufbau

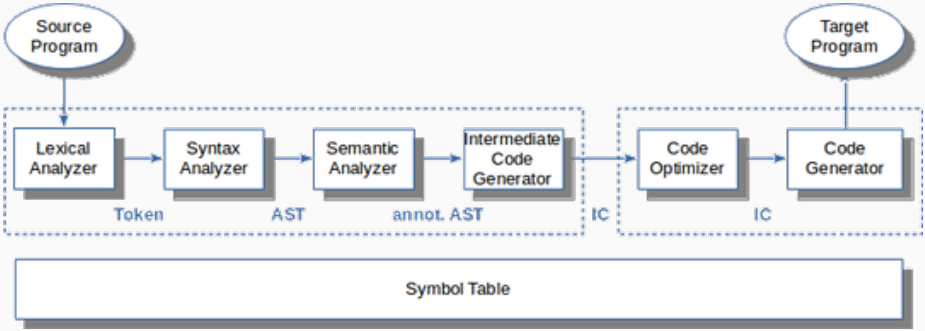

Lexikalische Analyse: Wörter (“*Token*”) erkennen

```
sp = 100;
```

Lexikalische Analyse: Wörter (“*Token*”) erkennen

```
sp = 100;
```

```
<ID, sp>, <OP, =>, <INT, 100>, <SEM>
```

Syntaxanalyse: Sätze erkennen

```
<ID, sp>, <OP, =>, <INT, 100>, <SEM>
```

Syntaxanalyse: Sätze erkennen

```
<ID, sp>, <OP, =>, <INT, 100>, <SEM>
```

```
statement : assign SEM ;
assign : ID OP INT ;
```

Syntaxanalyse: Sätze erkennen

```
<ID, sp>, <OP, =>, <INT, 100>, <SEM>
```

```
statement : assign SEM ;
assign : ID OP INT ;
```

```
                statement                =
                /       \               / \
            assign      SEM            sp  100
          /   |   \      |
        ID    OP  INT    ;
        |     |    |
        sp    =   100
```

Vorschau: Parser implementieren

```
stat : assign | ifstat | ... ;
assign : ID '=' expr ';' ;
```

```
void stat() {
    switch (<<current token>>) {
        case ID : assign(); break;
        case IF : ifstat(); break;
        ...
        default : <<raise exception>>
    }
}
void assign() {
    match(ID);
    match('=');
    expr();
    match(';');
}
```

Semantische Analyse: Bedeutung erkennen

```
{
    int x = 42;
    {
        int x = 7;
        x += 3;     // ???
    }
}
```

Semantische Analyse: Bedeutung erkennen

```
{
    int x = 42;
    {
        int x = 7;
        x += 3;     // ???
    }
}
```

```
                                                = {type: real, loc: tmp1}
sp = 100;                                      / \
                                              /   \
                                            sp     inttofloat
                                     {type: real,       |
                                      loc: var b}      100
```

Zwischencode generieren

```
                    = {type: real, loc: tmp1}
                   / \
                  /   \
                sp     inttofloat
      {type: real,        |
       loc: var b}      100
```

=> `t1 = inttofloat(100)`

Code optimieren

`t1 = inttofloat(100)` => `t1 = 100.0`

`x = y*0;` => `x = 0;`

Code generieren

- Maschinencode:

```
STD  t1, 100.0
```

- Andere Sprache:
  - Bytecode
  - C
  - ...

Probleme

```
5*4+3
```

AST?

Probleme

```
5*4+3
```

AST?

```
stat : expr ';'
     | ID '(' ')' ';'
     ;
expr : ID '(' ')'
     | INT
     ;
```

Wrap-Up

- Compiler übersetzen Text in ein anderes Format

- Typische Phasen:
  1. Lexikalische Analyse
  2. Syntaxanalyse
  3. Semantische Analyse
  4. Generierung von Zwischencode
  5. Optimierung des (Zwischen-) Codes
  6. Codegenerierung

LICENSE

Unless otherwise noted, this work is licensed under CC BY-SA 4.0.

Exceptions

- Figure A Map of the Territory (mountain.png) by Bob Nystrom on Github.com (MIT)