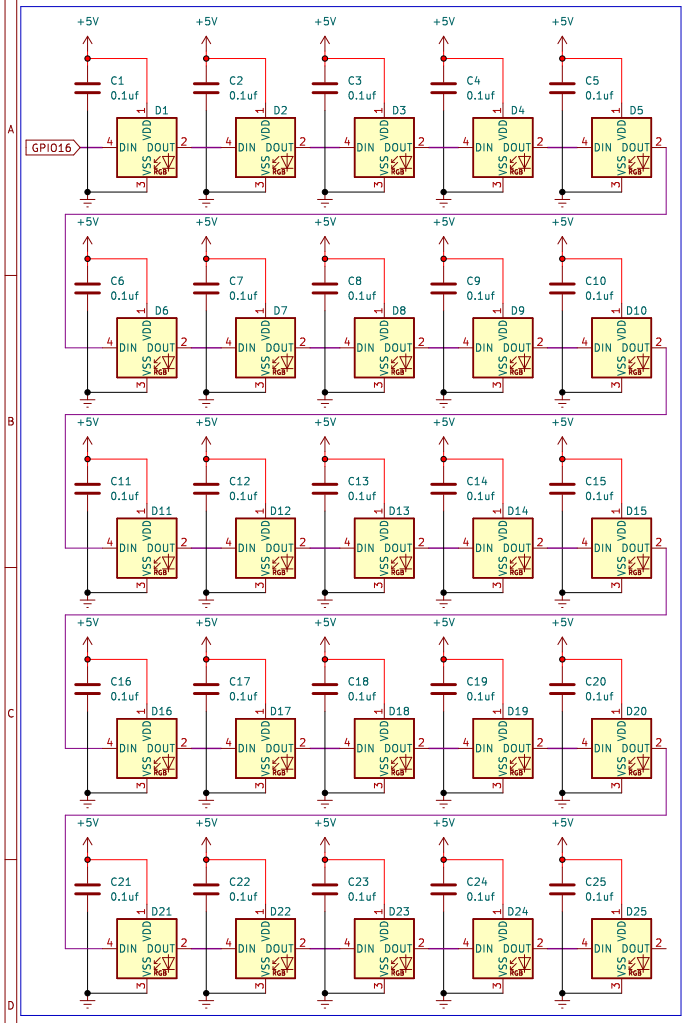

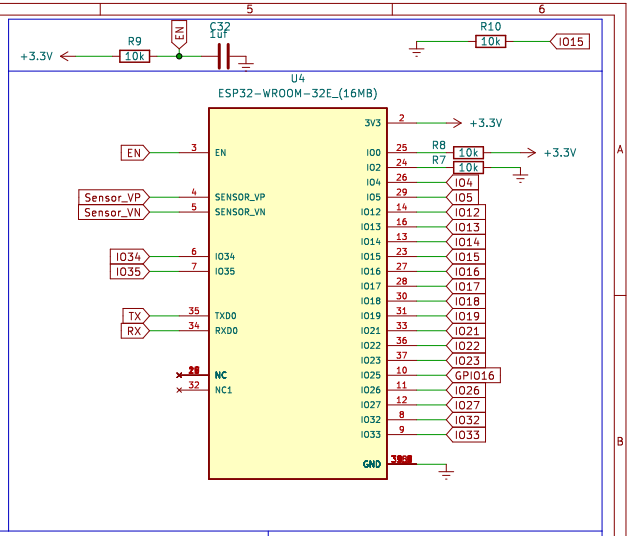

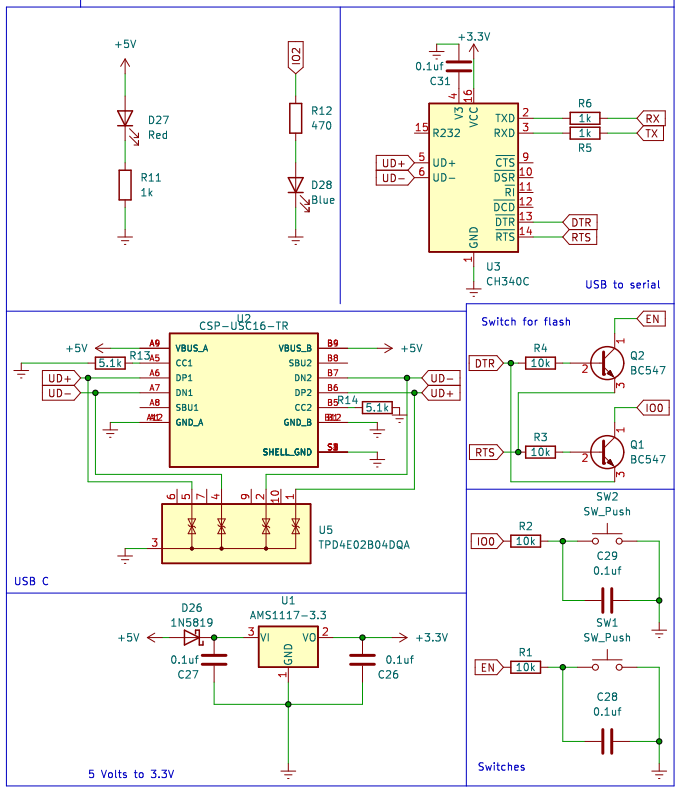

Conlass

Sheet:

File: ani_prototype.kicad_sch

Title: ESP32-LED Test

Size: User	Date: 28.01.23	**Rev: 1**
KiCad E.D.A. kicad 7.0.1		Id: 1/1