NanoPi NEO USB HAT
Revision 0

Based upon schematic by David Burkitt

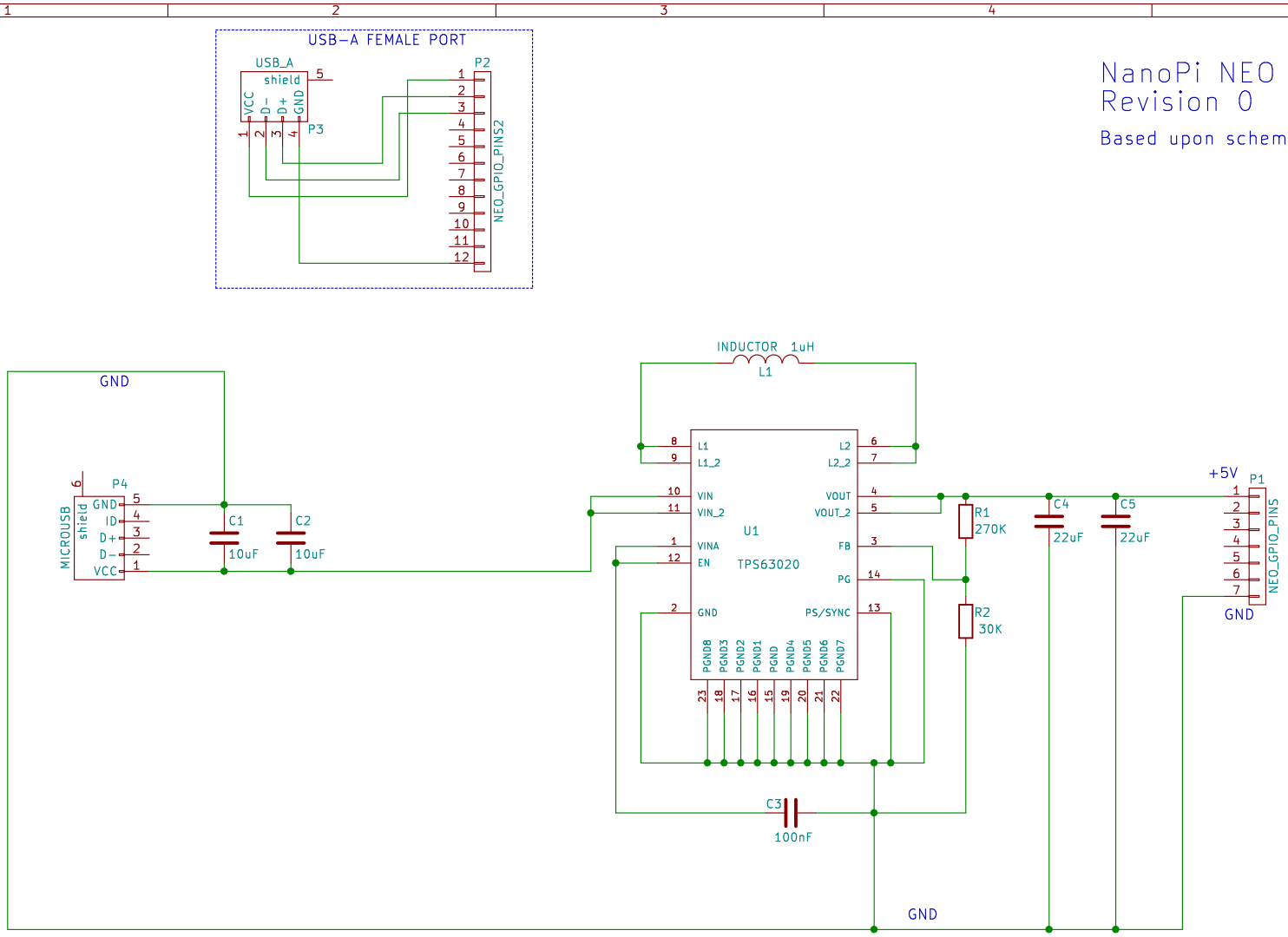

DAK

ConnectBox

Sheet: /

File: NanoPi_Neo_Daughterboard.sch

Title: NEO USB HAT

Size: USLetter	Date: 2017-06-14	**Rev: 0**
KiCad E.D.A. kicad 4.0.2-stable		Id: 1/1