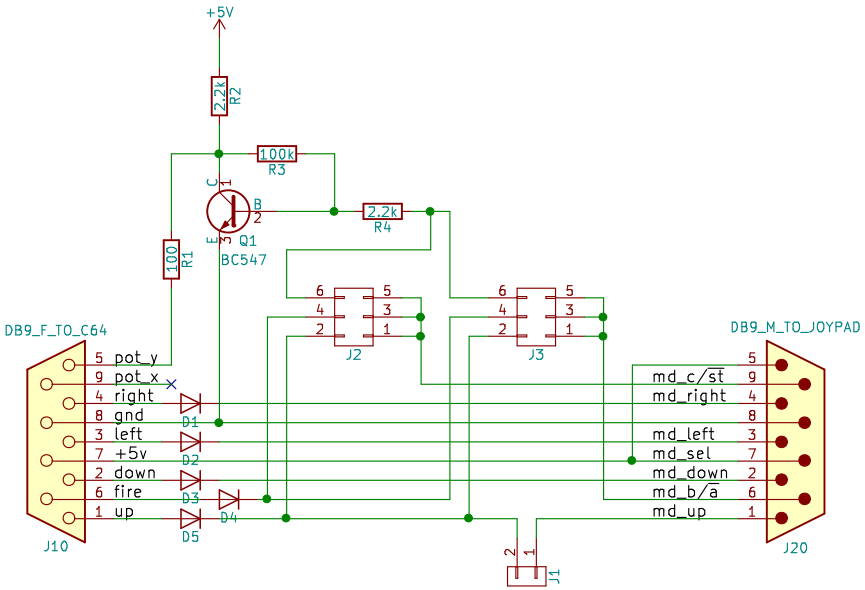

Recommended diodes are 1N4148 but any diode will work fine

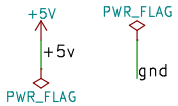

Based on an article published on Computer World #5
https://www.scribd.com/document/8945979/Commodore-World-Issue-05
SukkoPera (Thanks Etemenanki)

Sheet: /
File: OpenC64MegaDrivePadAdapter.sch

Title: Open Sega Mega Drive Joypad to C64 Adapter

Size: A4	Date: 2017-10-01	**Rev: 1**
KiCad E.D.A. kicad 4.0.7		Id: 1/1