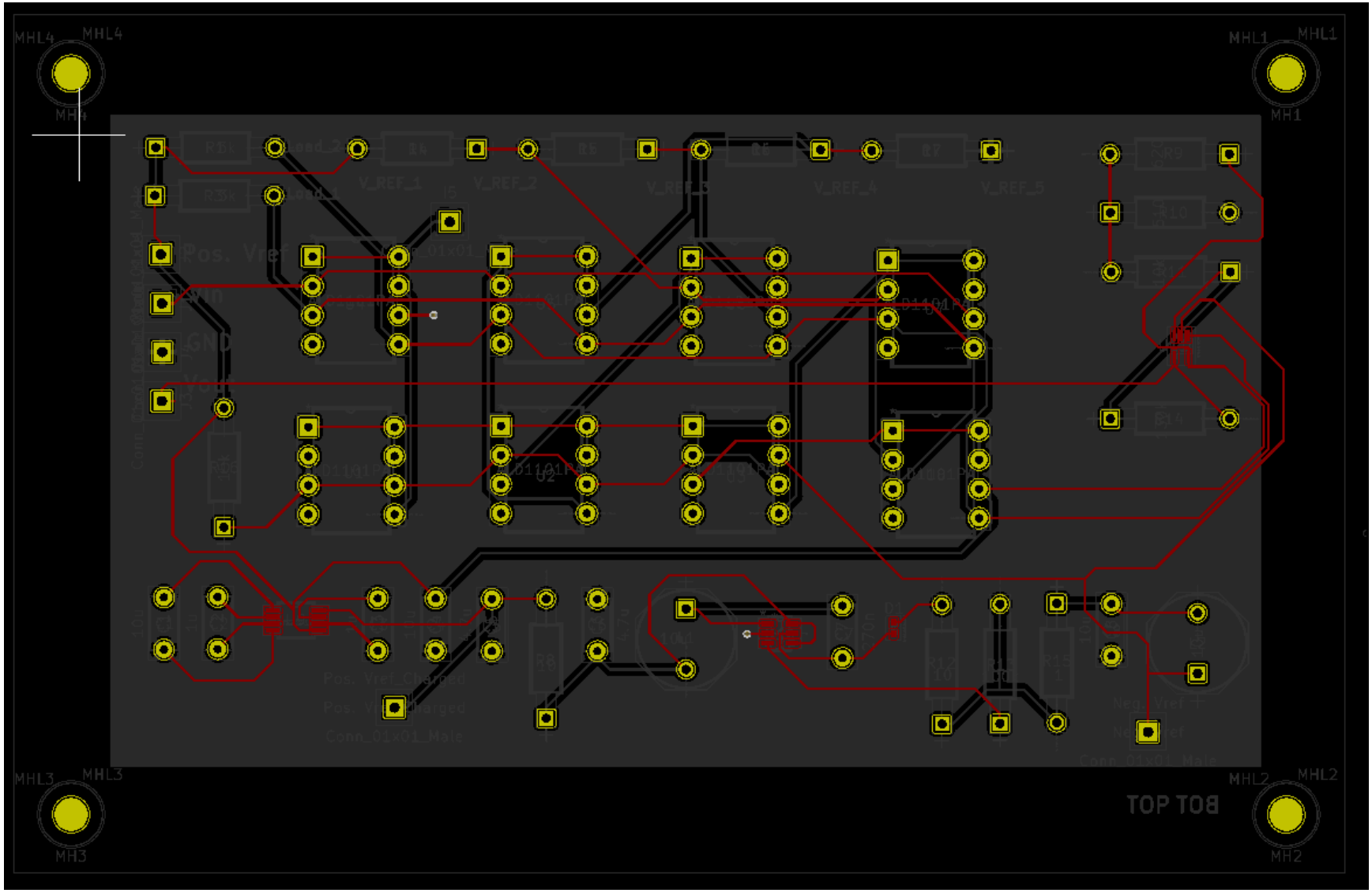
MHL4
MHL1
MHL3
MHL2
MH4
MH1
MH3
MH2
V_REF_1
V_REF_2
V_REF_3
V_REF_4
V_REF_5
Pos. Vref
GND
Volt
Pos. Vref_Charged
Neg. Vref
TOP
BOT

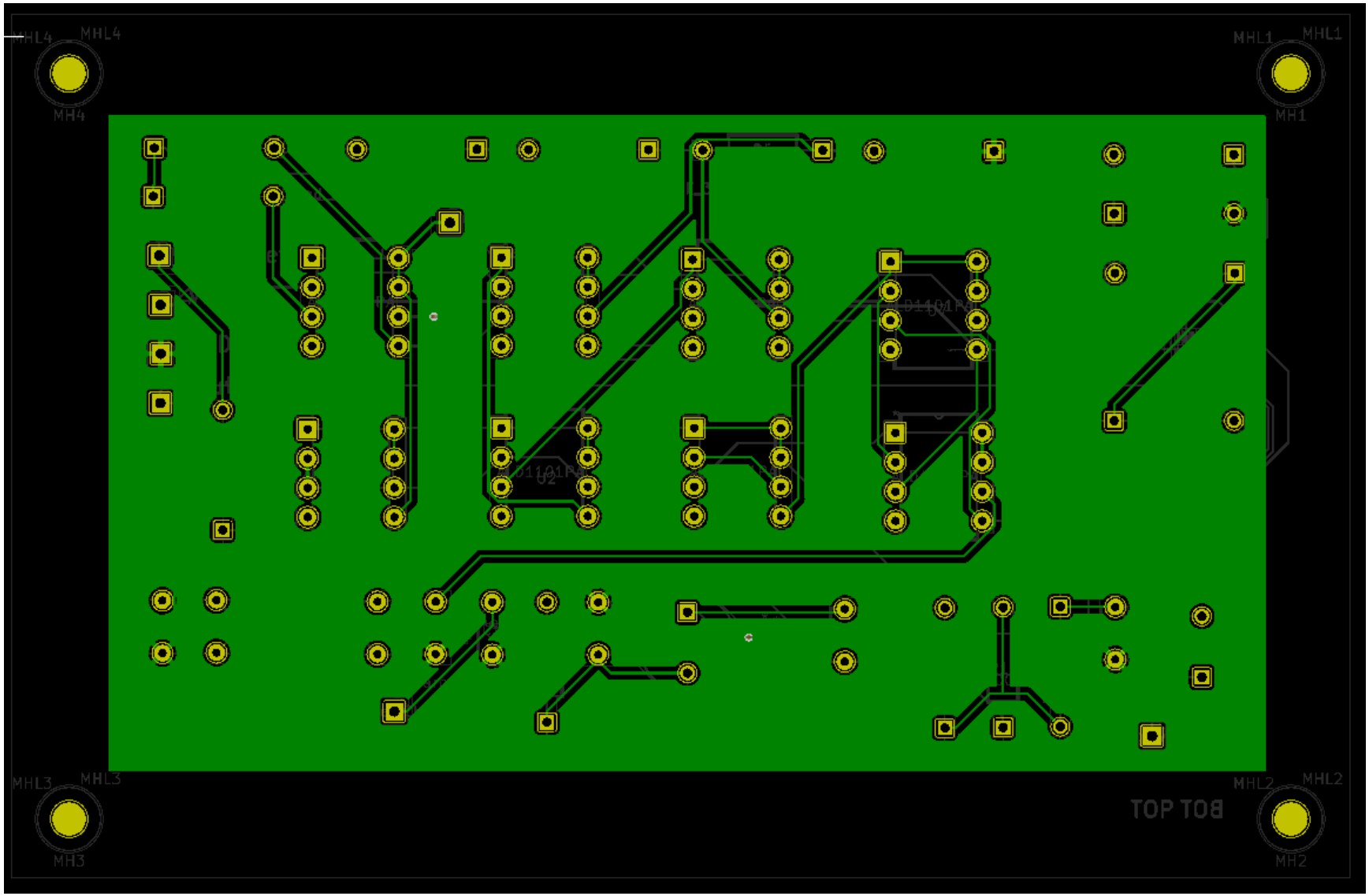
MHL4
MHL4
MH4
MHL1
MHL1
MH1
MHL3
MHL3
MH3
MHL2
MHL2
MH2
TOP
BOT

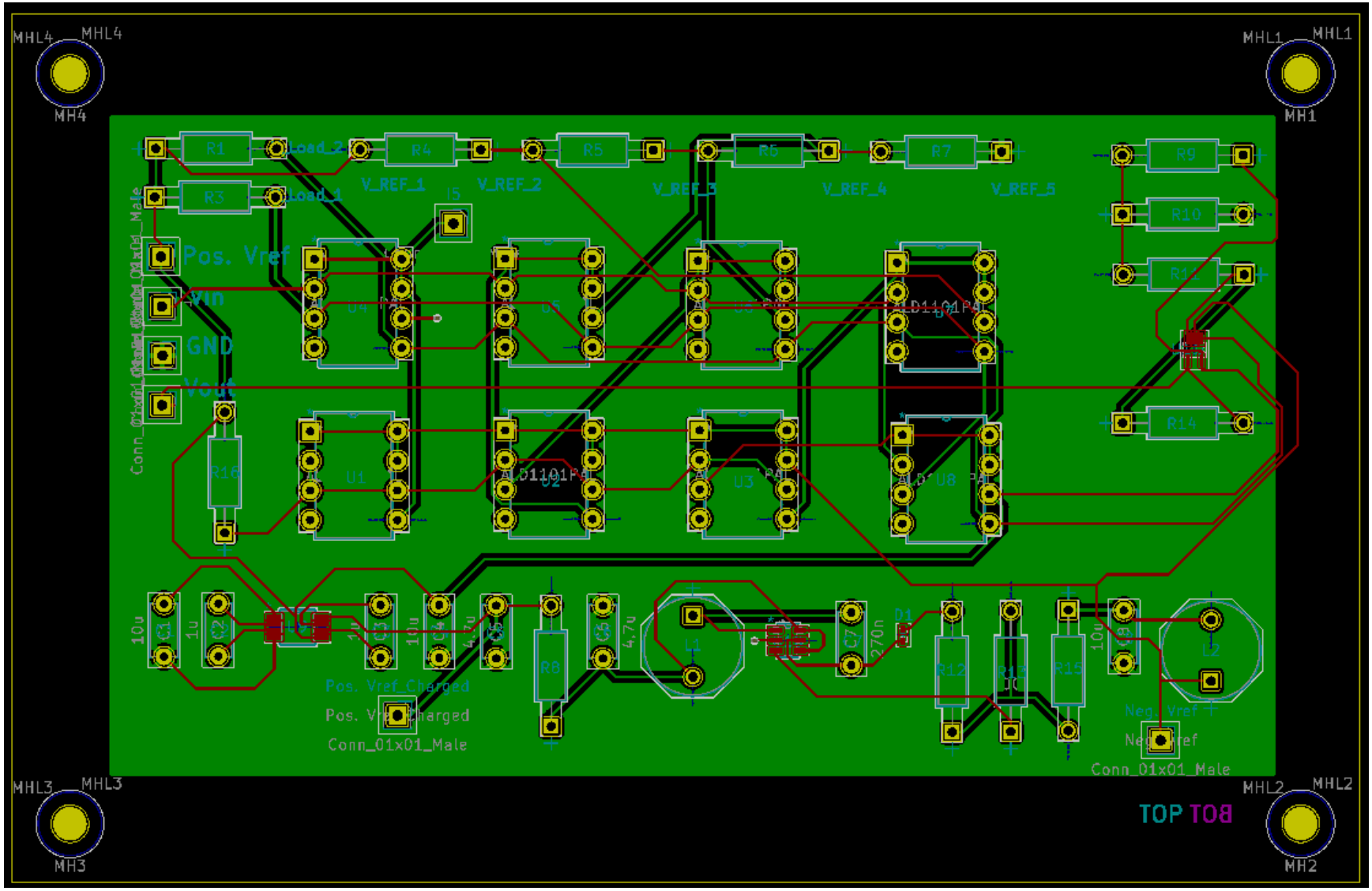
MHL4
MHL4
MH4
MHL1
MHL1
MH1
R1
R3
Load_2
Load_1
R4
R5
R6
R7
V_REF_1
V_REF_2
V_REF_3
V_REF_4
V_REF_5
R9
R10
R11
R14
Pos. Vref
Vin
GND
Vout
Conn_01x01_Male
R16
U1
U2
U3
U4
U5
U6
U8
ALD1101PA
10u
C1
1u
C2
C3
10u
C4
4.7u
C5
R8
C6
4.7u
L1
C7
270n
D1
R12
R13
R15
10u
C8
L2
Pos. Vref_Charged
Pos. Vref_Charged
Conn_01x01_Male
Neg. Vref
Neg. Vref
Conn_01x01_Male
MHL3
MHL3
MH3
MHL2
MHL2
MH2
TOP BOT

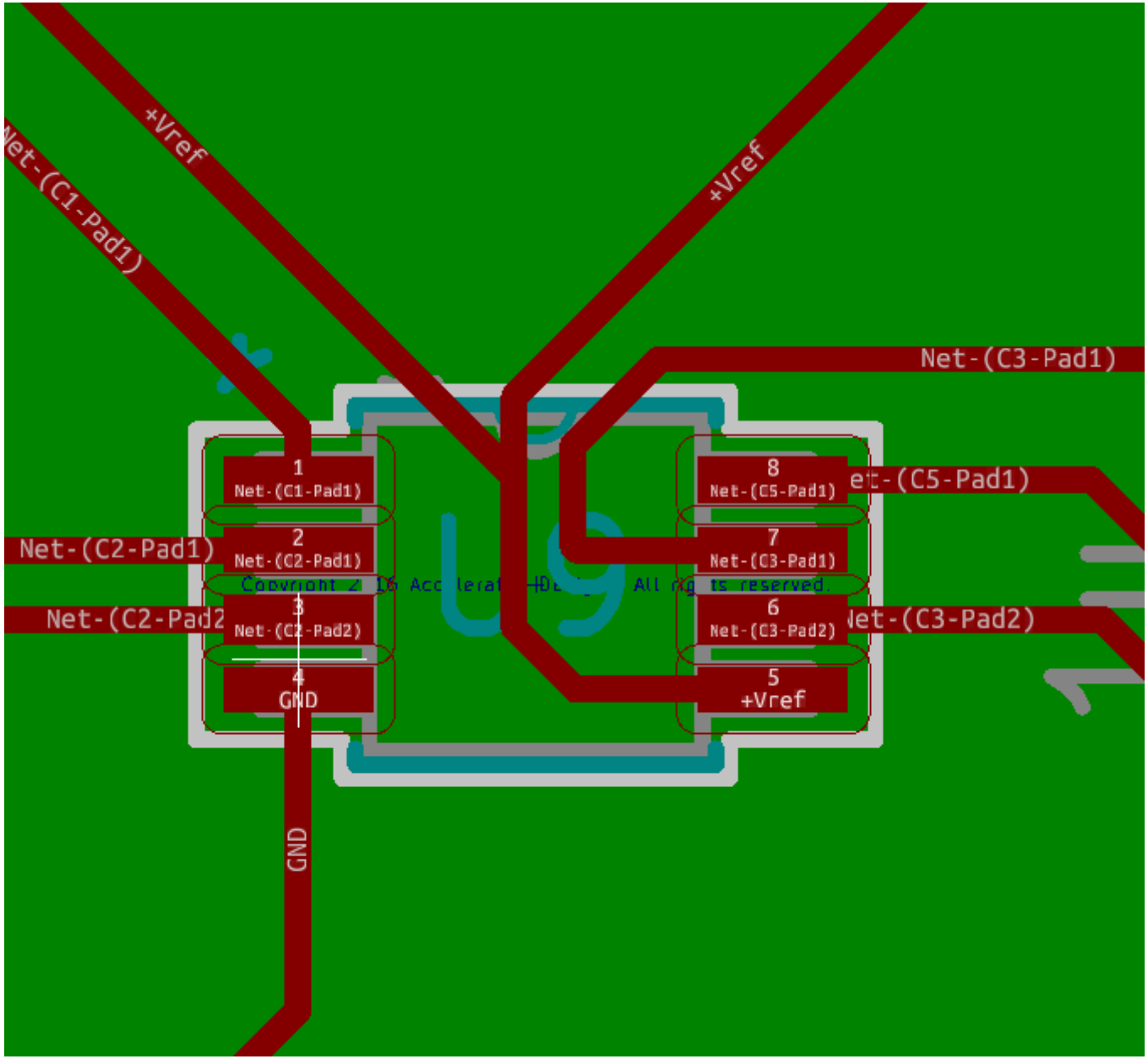
+Vref
Net-(C1-Pad1)
+Vref
Net-(C3-Pad1)
1
Net-(C1-Pad1)
8
Net-(C5-Pad1)
Net-(C5-Pad1)
Net-(C2-Pad1)
2
Net-(C2-Pad1)
7
Net-(C3-Pad1)
Net-(C2-Pad2
3
Net-(C2-Pad2)
6
Net-(C3-Pad2)
Net-(C3-Pad2)
4
GND
5
+Vref
GND

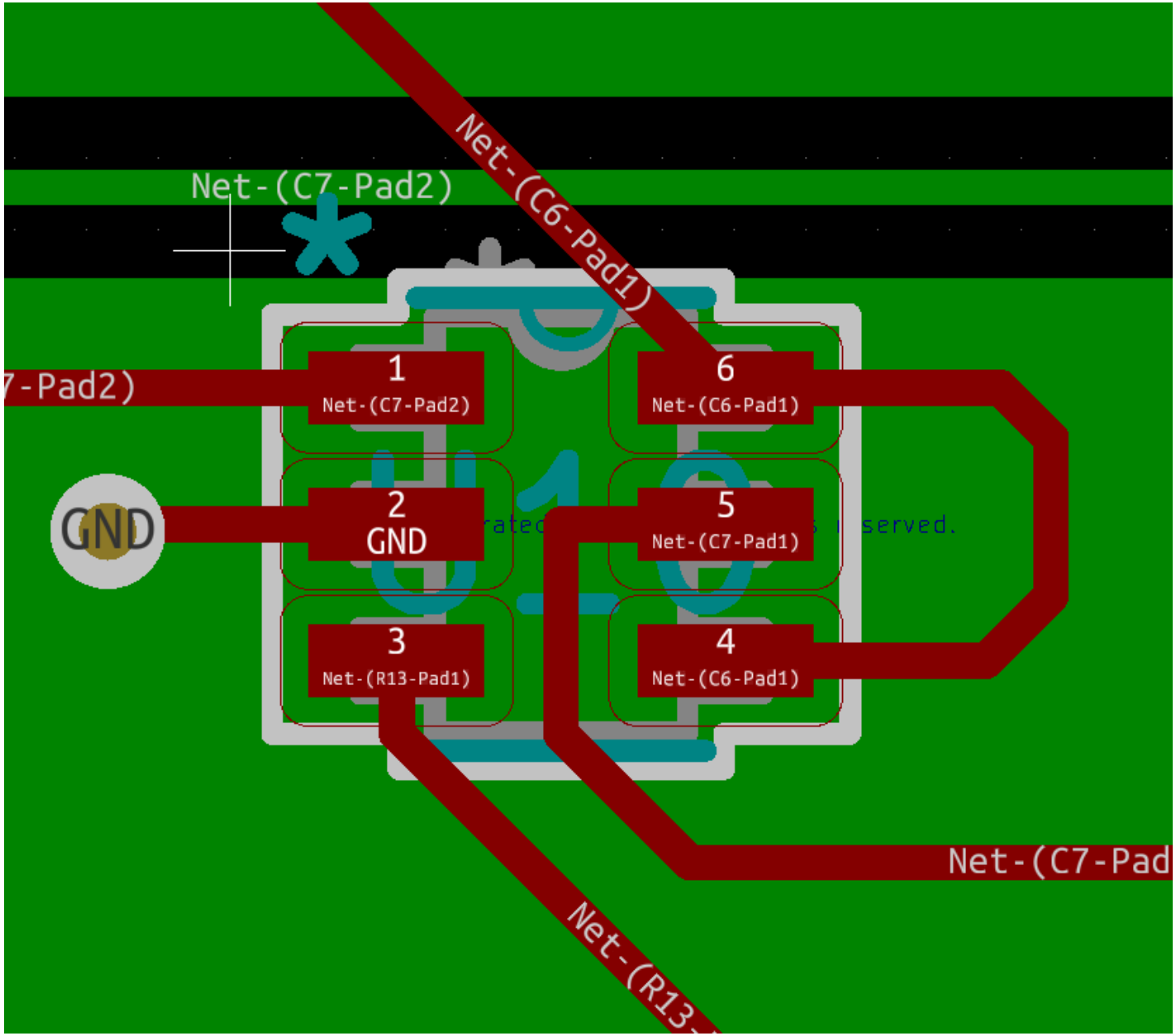
Net-(C7-Pad2)
Net-(C6-Pad1)
7-Pad2)
1
Net-(C7-Pad2)
6
Net-(C6-Pad1)
GND
2
GND
5
Net-(C7-Pad1)
3
Net-(R13-Pad1)
4
Net-(C6-Pad1)
Net-(C7-Pad
Net-(R13-

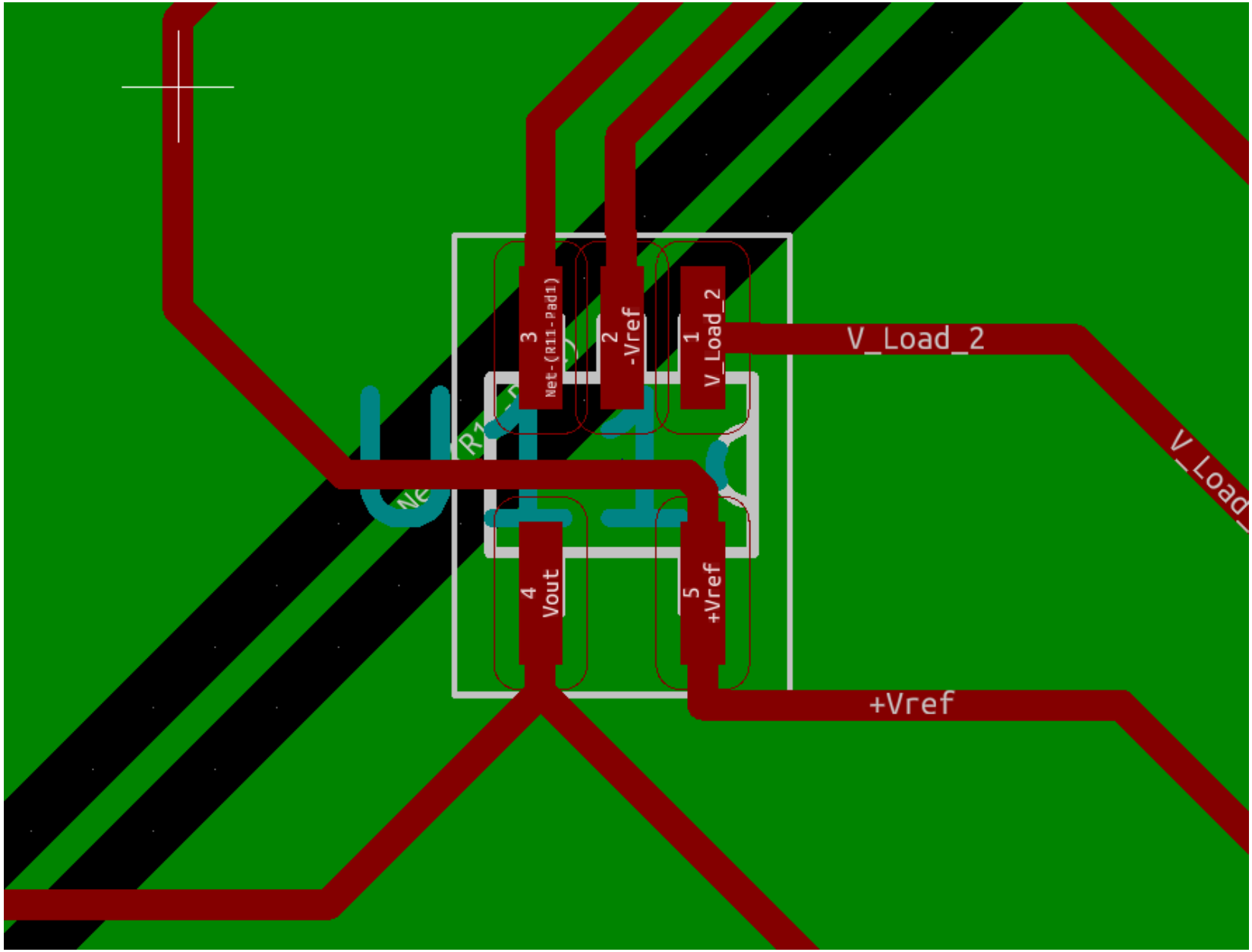
3
Net-(R11-Pad1)
2
-Vref
1
V_Load_2
4
Vout
5
+Vref
V_Load_2
+Vref
V_Load