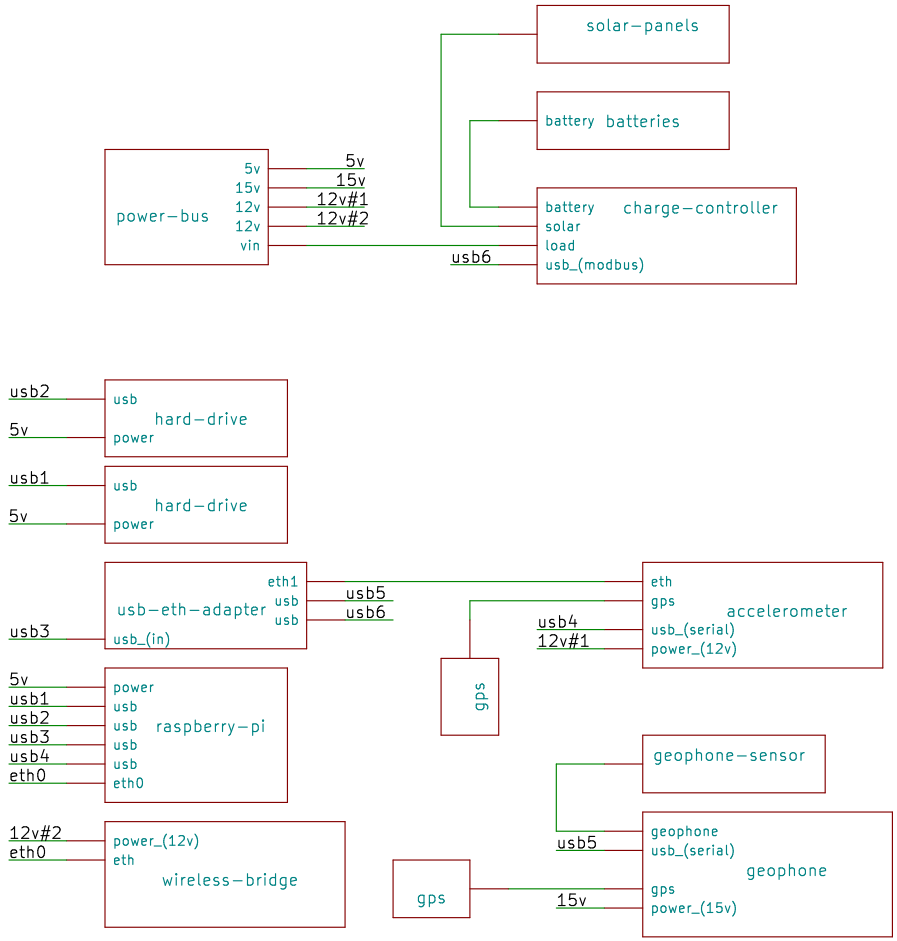

Sheet: /glacier/
File: glacier.sch

Title:

Size: A4	Date:	Rev:
KiCad E.D.A. kicad 4.0.6		Id: 2/3

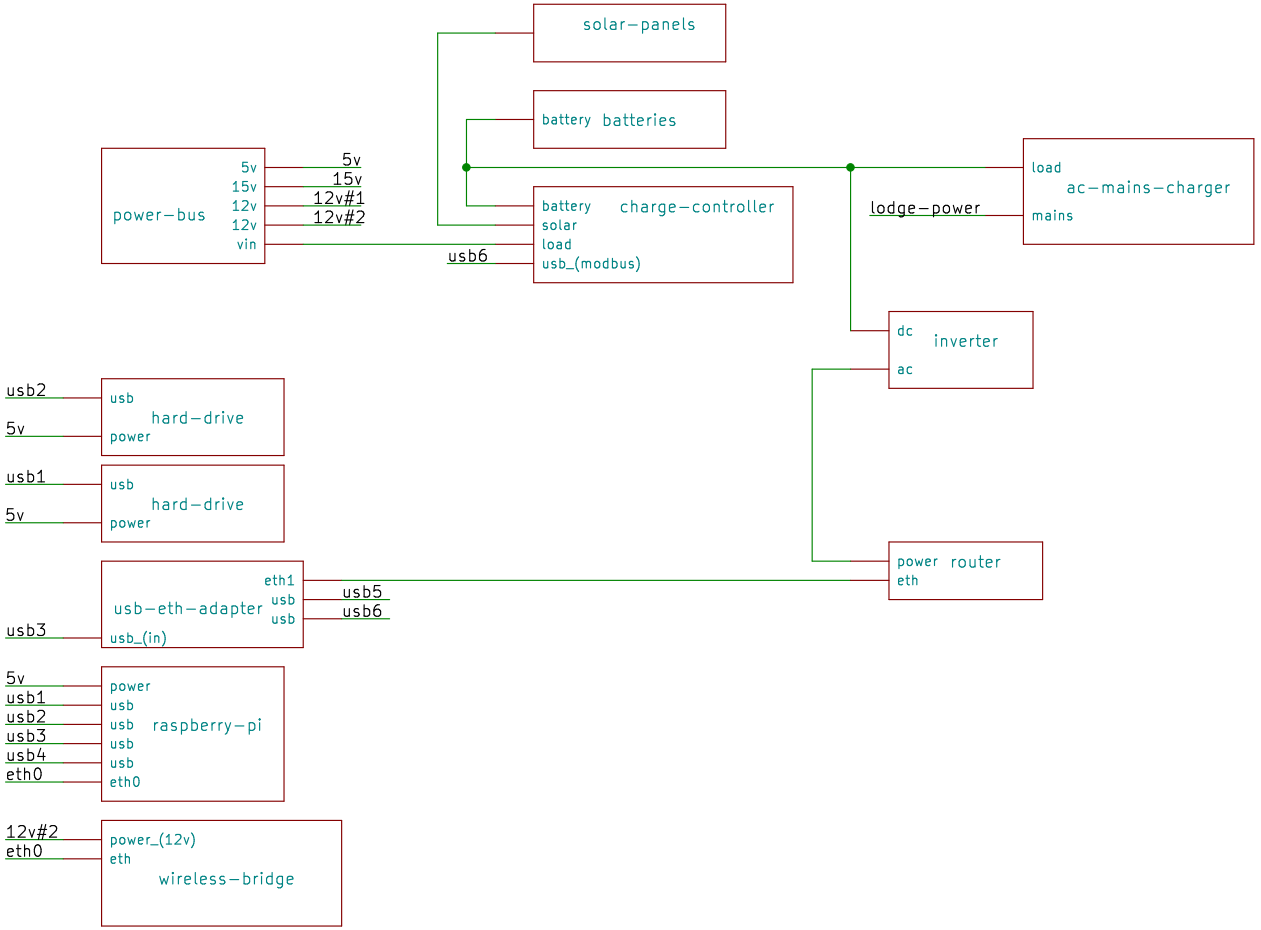

Sheet: /lodge/
File: lodge.sch

Title:

Size: A4	Date:	Rev:
KiCad E.D.A. kicad 4.0.6		Id: 3/3