energyintel
energy evolved

Internship Tasks Description

Prepared and presented by:

Constantinos Paschalis

Nicosia, Cyprus, 23/08/2025

E247

Sodium

Works with

Should it work like this

Alternatives

energyintel
energy evolved

Alternatives

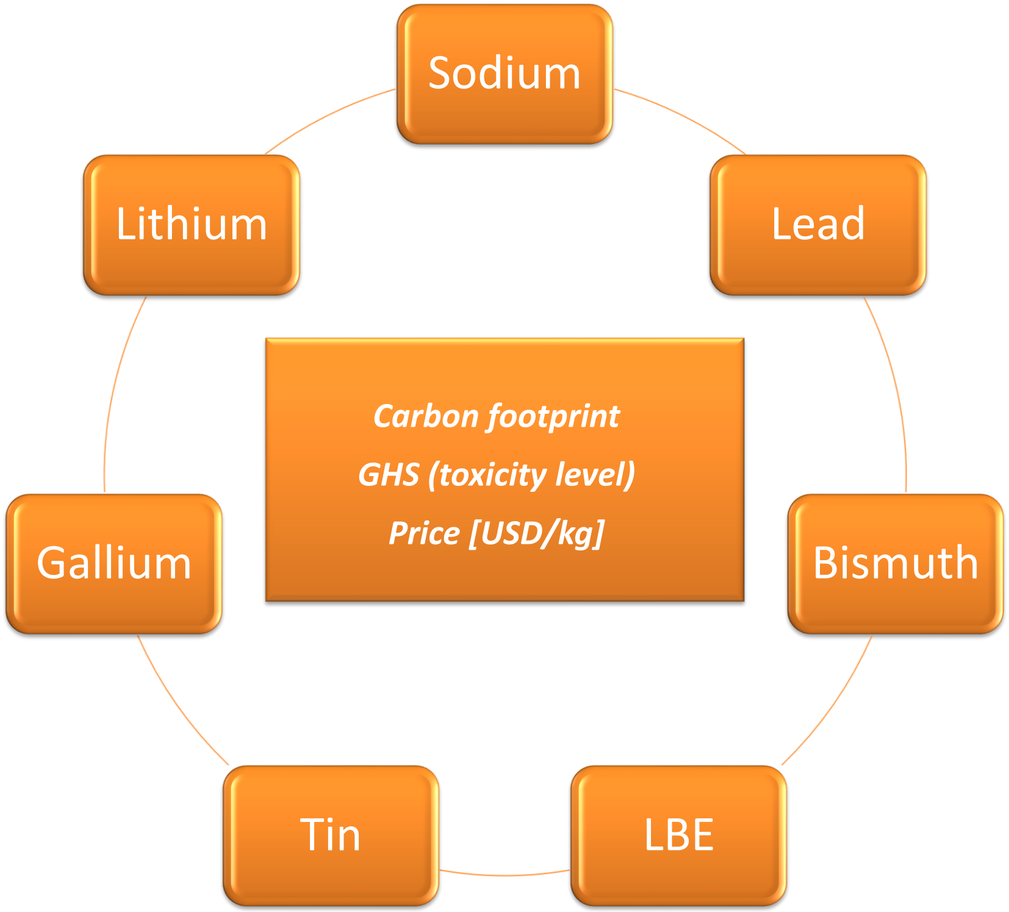

Note: *For both PCM (Phase Change Material) and HTF (Heat Transfer Fluid) their parameters for Viscosity, Density, Thermal Conductivity, Prandtl Number were found Bibliographically*

Goal

Goal

- Select the optimal fluid doing a linear optimization solving a set of non-linear equations for the selection of the most suitable fluid to be applied in E247.

Fluid Selection Parameters

- Fluid Cost
- Discharge Cycle efficiency (Efficiency of tank to fluid and fluid to hydrogen in the Heat exchanger)
- Carbon Footprint of the Fluid
- GHS (toxicity level)

Important Calculations

- Power transferred to Hydrogen
- Pump needed for operation

Model content

- Fluid Characteristics (Cost, Toxicity, Carbon Footprint, e.t.c)
- Convection coefficient calculation (Both for Heat Exchanger and pipes)
- Calculation oh the power of Pump needed
- Full Dynamic Model for Charging phase
- Full Dynamic Model for Discharging phase
- Optimization

MCDA (Multi Criteria Decision Analysis)

Okay Math is good ... But wait a moment, which alternative is the best?

Normalization: $I = \frac{x_{ic} - \min(x_i)}{\max(x_i) - \min(x_i)}$ $if\ highest\ value\ is\ the\ best\ performing$

Aggregation using the additive method: Score = $\sum_{i=1}^{n} I_{ic} \times w_i$

Weight Symbol	Description	Value
w_{cf}	Carbon Footprint [kg CO_2/kg]	0.1
w_{ghs}	Global Harmonized System Hazard Score	0.1
w_{pump}	Pumping Power required [W]	0.05
w_{price}	Fluid Cost [USD]	0.1
w_{react}	Reactivity	0.6

MCDA Results – Constant Power of 42 kW

Fluid	Carbon Footprint [kgCo2/kg]	GHS (Global Harmonized System – Toxicity)	Price [USD]	Pumping Power [W]	Reactivity
Sodium	21.3	4	150	120	5
Lead	76	2	1269	460	1
Bismuth	30.1	4	3776	620	1
LBE	80	1	2748	524	1
Tin	2.93	4	7275	277	1
Gallium	11.93	1	51603	0.16	2
Lithium	15	1	2224	15.3	5

Note: GHS is on a scale where 1 is the worst, while Reactivity 1 is the best (least reactive).

Fluid	Without Weighting (Ranking)	With Weighting (Ranking)
Sodium	4.39 (2)	0.36 (7)
Lead	2.89 (6)	0.76 (3)
Bismuth	3.61 (5)	0.86 (2)
LBE	1.31 (7)	0.61 (5)
Tin	5.04 (1)	0.94 (1)
Gallium	3.97 (3)	0.67 (4)
Lithium	3.79 (4)	0.28 (6)

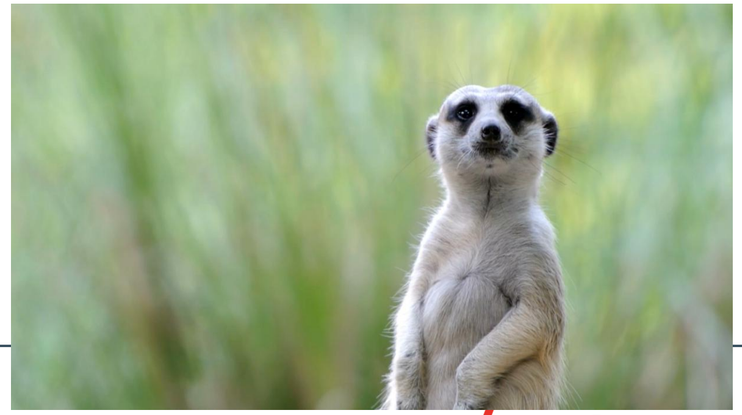

by Unknown Author is licensed under

Sodium seem to be the worst! But further work and a different approach might show different results

Design of a container for a containerized solution

Note: A detailed report is already handed in

A very Detailed analysis on a DNV Container, Including:

- *Manufacturing Flowchart*
- *Applicable Standards*
- *Dimensions, Materials, Loads*
- *Frame assembly both Bottom, Top, corner casting and corner posts*
- *Floor and Wall Design*
- *Welding Requirements and Standards*
- *Doors and Ventilation requirement and standards*
- *Painting and Coating*
- *Maintenance and Inspection*
- *Marking and Labeling*
- *Documentation and Certification*

Design of a container – Final Design

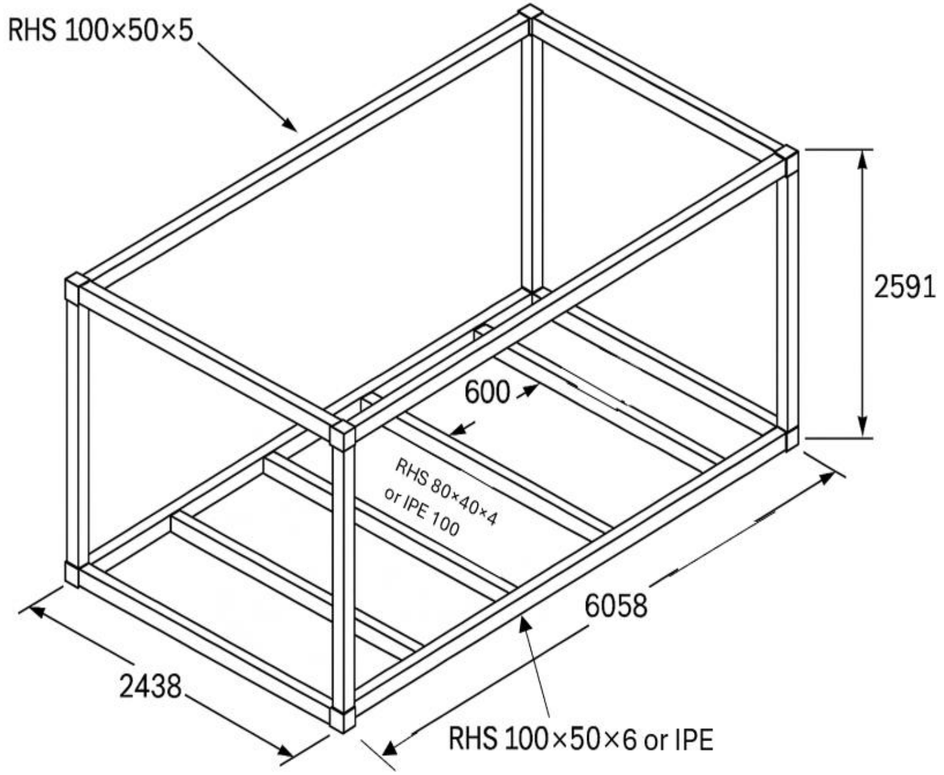

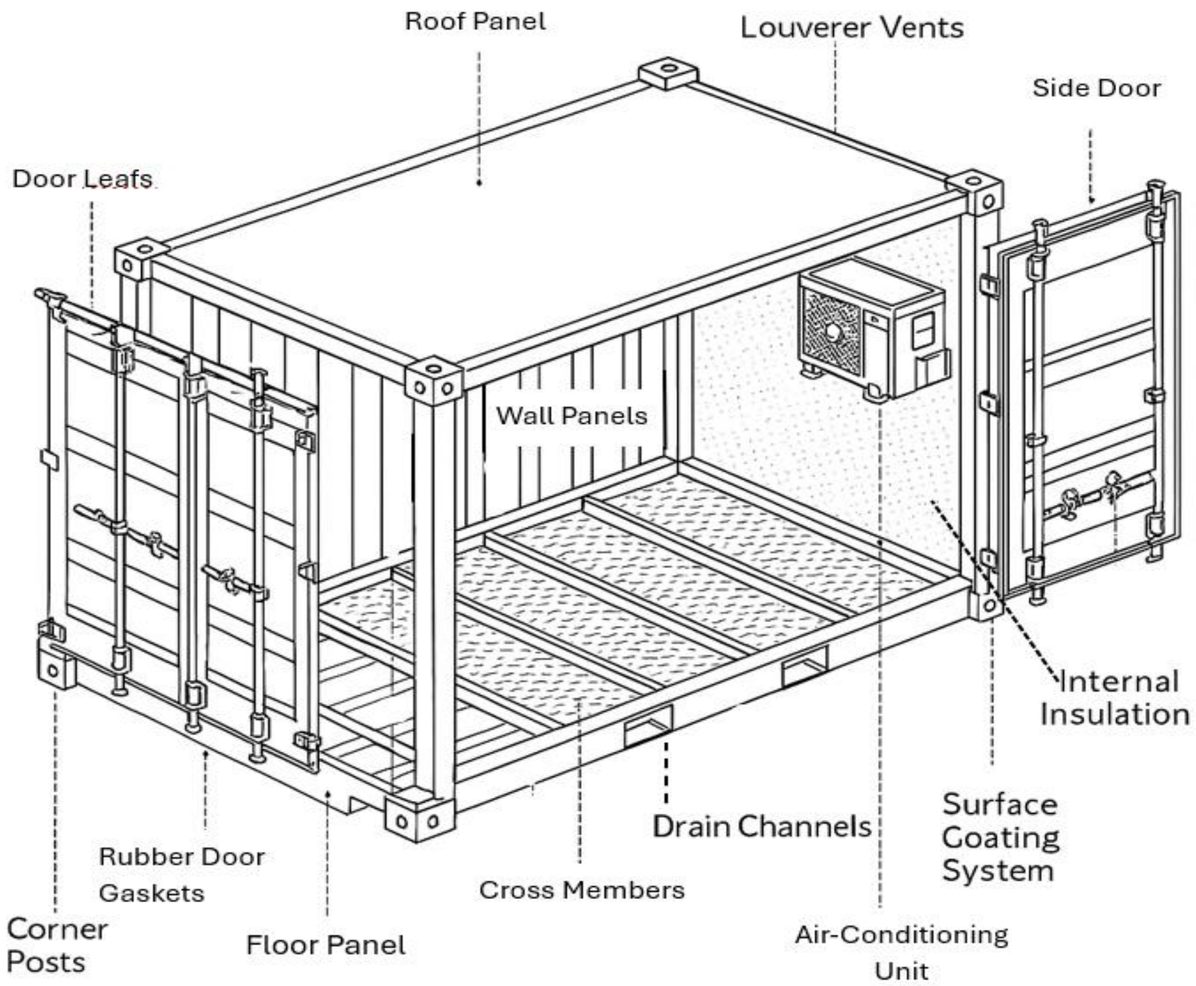

Find Sensors and Communicate with sellers, alongside with suggested designs for implementation

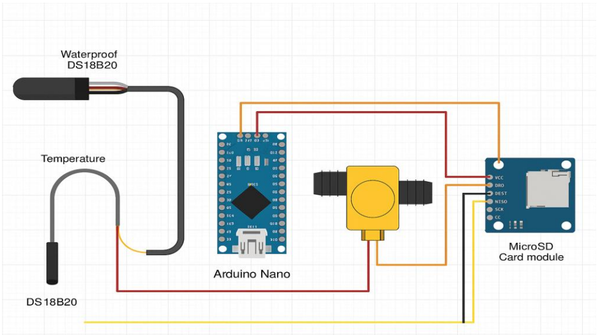

Timesheet Creation

Data Analysis of Azelio's data set to find the KPI's of the thermal storage unit as well with reading of the articles from Azelio to take the key values

And a small report on an aluminum recycling Factory alongside with a rough potential cost. With an economic analysis for the Operational cost and Annualized cost.

Machine	Capex [USD]	OPEX/year [USD]	Total Annualized Cost [USD]
Hydraulic Shear	40,000- 120,000	45,000 - 90,000	85,000 – 210,000
Eddy-Current Separator	900 - 50,000	1,000 - 5,000	1,900 – 55,000
Tilting Rotary Furnace	10,000 - 100,000	80,000 - 100,000	90,000 – 200,000
Fluxing and Degrassing	10,000 - 40,000	1,000 - 3,000	11,000 – 43,000

energyintel
energy evolved

Internship Benefits:

- Worked with a highly motivated, experienced and well organize team in a friendly environment that was able to enrich my knowledge and experience
- Tasks that made me expand my knowledge and apply it in practical situations
- Apply my theoretical thermodynamics and modelling skills in a problem, providing insights on the results and designs
- General grow as an engineer in the field of energy having the opportunity to solve real life problems, and see a broaden aspect of the needs of the industry in Cyprus

Thank you all for helping and guiding me!

energyintel
energy evolved

energyintel
energy evolved

GET IN TOUCH

Energy Intel Group
1, Grigori Afxentiou Street,
Palouriotissa 1040, Nicosia, Cyprus

Tel.: +357 22 380 707
info@energyintel.com.cy www.energyintel.com.cy

|

energyintel
energy evolved