@Seismicisolation

HB 2.2—2003

(Incorporating Amendment Nos 1 and 2)

Australian Standards

for civil engineering students

Part 2: Structural engineering

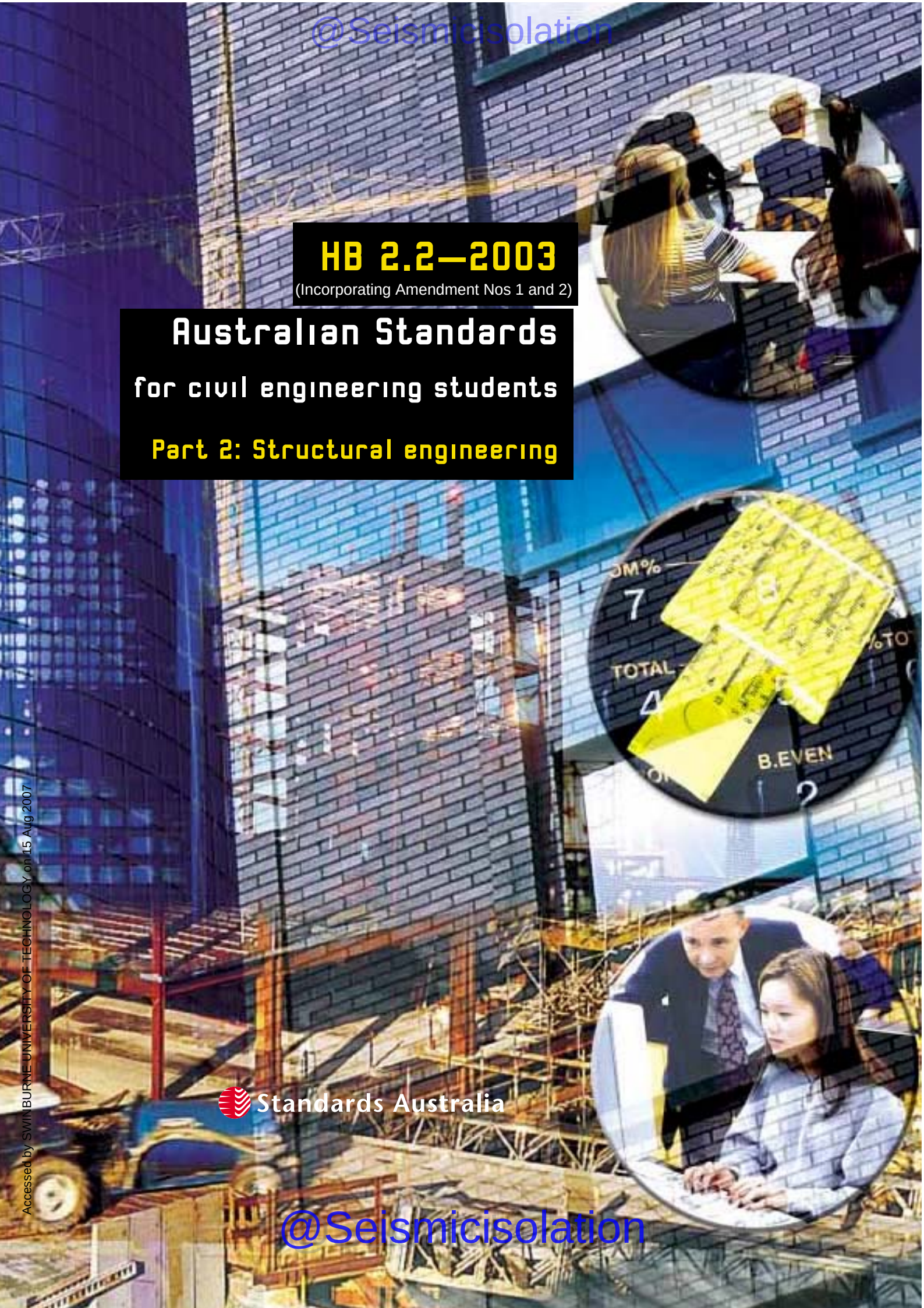

Standards Australia

Accessed by SWINBURNE UNIVERSITY OF TECHNOLOGY on 15 Aug 2007

@Seismicisolation

@Seismicisolation

HB 2.2—2003
(Incorporating Amendment Nos 1 and 2)

Australian Standards for civil engineering students

Part 2: Structural engineering

Originated as part of HB 2—1982.
Previous edition HB 2.2—2002.
Eighth edition 2003.
Reissued incorporating Amendment No. 1 (March 2003).
Reissued incorporating Amendment No. 2 (July 2004).

Accessed by SWINBURNE UNIVERSITY OF TECHNOLOGY on 15 Aug 2007

COPYRIGHT

© Standards Australia International

All rights are reserved. No part of this work may be reproduced or copied in any form or by any means, electronic or mechanical, including photocopying, without the written permission of the publisher.

Published by Standards Australia International Ltd
GPO Box 5420, Sydney, NSW 2001, Australia
ISBN 0 7337 5027 3

@Seismicisolation

@Seismicisolation

INTRODUCTION

This Handbook is the eighth edition (2003) of Part 2 of Australian Standards for civil engineering students. It was first published by Standards Australia in 1982 as a text book of abridged Standards suited to civil engineering subjects taught at tertiary level. The continuing intention is to make Standards more readily accessible to students and educational institutions.

Because of tightened copyright laws and the increased surveillance of copyright breaches, by 1981 the organization had become aware of a real need for a publication of this type. Lecturers from schools of civil engineering were asking for rights to copy and reproduce Standards, because purchase of Standards in their complete form was financially beyond most students. The Handbook was, therefore, designed to fill the requirements of both students and lecturers for a copy of commonly used parts of relevant Standards, at a reasonable cost.

This Handbook—

a) *is re-issued incorporating Amendment No. 1 (March 2003), which corrects the editorial errors in some characters/symbols (such as f'_c, ρ, ζ, ≤, ±, α, ε, °) on the following pages:*

Introduction (this page), pages 6, 7, 11, 14, 15, 19, 27 to 32, 37, 38, 46 to 49, 51 to 53, 72, 78, 79, 84, 106, 112, 117, 118, 120, 121, 132, 526, 527, 545 to 547, 554 to 557, 560, 569 and 570;

and

b) *incorporates Amendment No. 2 (July 2004). The changes required by this Amendment are indicated in the text by a marginal bar and amendment number against the clause, note, table, figure, or part thereof affected.*

This Handbook was prepared by Standards Australia in consultation with Schools and Departments of Civil Engineering and Building in Universities, Institutes of Technology and Colleges of Technical and Further Education in all States. It is not an Australian Standard but comprises extracts from selected Australian Standards considered relevant to undergraduate courses in civil engineering and advanced courses in building and building sciences. It is hoped that by this means, students will be better able to understand and use Standards when they enter the workforce.

Extracts in this part of the Handbook were selected to familiarize students with the nature and extent of structural engineering Standards and the type of constraints they imposed on persons working in the building industry. While extracts include portions of Standards that refer to frequently encountered situations, they do not contain all requirements that may be of critical importance to their assessment. In addition, while the Standards from which these extracts were taken were current editions at the time of publication of this Handbook, at any subsequent time the relevant Standards may have been amended or superseded.

For the foregoing reasons, this Handbook should only be used for educational purposes. Standards Australia does not accept any liability for any consequences that may result from the use of the Handbook for any purpose other than student instruction.

Views of teachers and students on this Handbook will be welcomed by Standards Australia, particularly on the inclusion of additional material or the deletion of other material in future revisions. Because this Handbook is comprised of ‘extracts’, it will be noted that, in some cases, Standards that are referred to are not necessarily included in the Handbook.

Accessed by SWINBURNE UNIVERSITY OF TECHNOLOGY on 15 Aug 2007

@Seismicisolation

@Seismicisolation

CONTENTS

Page

FOREWORD 4
CHAPTER 1 CONCRETE STRUCTURES 5
CHAPTER 2 STEEL STRUCTURES 135
CHAPTER 3 TIMBER STRUCTURES—DESIGN METHODS 269
CHAPTER 4 MASONRY STRUCTURES 405
CHAPTER 5 STRUCTURAL DESIGN ACTIONS 483
CHAPTER 6 RESIDENTIAL SLABS AND FOOTINGS—CONSTRUCTION 615

Accessed by SWINBURNE UNIVERSITY OF TECHNOLOGY on 15 Aug 2007

@Seismicisolation

@Seismicisolation

FOREWORD

Preparation and use of Standards

Australian Standards are issued by Standards Australia.

Within Standards Australia, the Construction Group produces Standards dealing with—

(a) specifications for building materials;

(b) methods of testing for the properties of construction materials;

(c) rules for design and construction in the principal structural materials (usually called codes, and adopted by Governments in building regulations);

(d) glossaries of terms; and

(e) other matters related to building and civil engineering—such as standard fire tests and rules for demolition of old buildings.

Standards are revised and updated every few years in accordance with accepted good current practice, and experience in the use of the previous edition of the Standard.

Standards usually specify minimum requirements for the performance and safety of particular products or forms of construction. They are not intended to prevent or inhibit the development of new products or the application of good manufacturing design and construction techniques within the intent and spirit of the Standards.

The emphasis in modern Standards is on the required results (performance) rather than the methods or materials required to achieve these results (prescription).

Contents of Part 2

Part 2 contains extracts from Standards related to structural engineering design and construction in the commonly used materials.

This edition of Part 2 of the Handbook includes extracts from the following Standards:

AS	
1170	Minimum design loads on structures
1170.4—1993	Part 4: Earthquake loads
1720	Timber structures
1720.1—1997	Part 1: Design methods
2870—1996	Residential slabs and footings—Construction
3600—2001	Concrete structures
3700—2001	Masonry structures
4100—1998	Steel structures
AS/NZS	
1170	Structural design actions
1170.0:2002	Part 0: General principle
1170.1:2002	Part 1: Permanent, imposed and other actions
1170.2:2002	Part 2: Wind actions

Where included Standards have been amended, the amendments have been incorporeated in the extracts.

Accessed by SWINBURNE UNIVERSITY OF TECHNOLOGY on 15 Aug 2007

@Seismicisolation

@Seismicisolation

CHAPTER 1

CONCRETE STRUCTURES

This Chapter consists of edited extracts from AS 3600—2001, *Concrete structures*. The Standard deals with the design and construction of plain, reinforced and prestressed concrete structures and members, but does not apply to special structures such as mass concrete dams or non-structural elements such as precast concrete pipes.

Accessed by SWINBURNE UNIVERSITY OF TECHNOLOGY on 15 Aug 2007

@Seismicisolation

@Seismicisolation

STANDARDS AUSTRALIA

Australian Standard

Concrete structures

SECTION 1 SCOPE AND GENERAL

1.1 SCOPE AND APPLICATION

1.1.1 Scope

This Standard sets out minimum requirements for the design and construction of concrete structures and members that contain reinforcing steel, or tendons, or both. It also sets out minimum requirements for plain concrete members.

This Standard will be referenced in the Building Code of Australia by way of BCA Amendment No. 9 to be published by 1 July 2001, thereby superseding the previous edition, AS 3600—1994, which will be withdrawn 12 months from the date of publication of this edition.

1.1.2 Application

This Standard is intended to apply to concrete structures made of concrete—

(a) with a characteristic compressive strength at 28 days (f'_c) in the range of 20 MPa to 65 MPa; and

(b) with a saturated surface-dry density in the range 1800 kg/m^3 to 2800 kg/m^3.

The Standard also applies to reinforcing steels complying with—

(a) AS 1302, or having a yield strength (f_{sy}) of 500 MPa and Ductility Class N in accordance with AS/NZS 4671. These reinforcing materials may be used, without restriction, in all applications referred to in this Standard; and

(b) AS 1303 or AS 1304, or having a yield strength (f_{sy}) of 500 MPa and Ductility Class L in accordance with AS/NZS 4671. These reinforcing materials shall not be used in any situation where the reinforcement is expected to undergo large deformation under strength limit state conditions.

NOTE: The use of Ductility Class L reinforcement is further limited by other clauses within this Standard.

(c) Prestressing tendons complying with AS 1310, AS 1311, or AS 1313, as appropriate.

For concrete road bridges and for concrete railway bridges, HB77.5 and HB77.8, respectively, shall be used where applicable.

The general principles of concrete design and construction embodied in this Standard may be applied to concrete other than that specified above, or to concrete structures or members not specifically mentioned herein.

This Standard is not intended to apply to the design of mass concrete structures. It is also not intended that the requirements of this Standard should take precedence over those of other Australian Standards.

NOTES:

1 It is intended that the design of a structure or member, to which this Standard applies, be carried out by, or under the supervision of, a suitably experienced and competent person.

Accessed by SWINBURNE UNIVERSITY OF TECHNOLOGY on 15 Aug 2007

@Seismicisolation

@Seismicisolation

2 Consideration is being given to extending the application of the Standard to structures in which the characteristic compressive strength of concrete (f'_c) is greater than 65 MPa. However, before such an extension could be incorporated, current research data indicates that some requirements of the Standard would need to be more stringent than those presently given and others appropriately modified.

1.2 REFERENCED DOCUMENTS

The documents referred to in this Standard are listed in Appendix C.

1.3 USE OF ALTERNATIVE MATERIALS OR METHODS

1.3.1 General

Provided that the requirements of Section 2 are met, this Standard shall not be interpreted so as to prevent the use of materials or methods of design or construction not specifically referred to herein.

NOTE: Where the intended use is subject to the control of a Building Authority, approval for the use of alternative materials or methods will need to be obtained from the Authority.

1.3.2 Existing structures

Where the strength or serviceability of an existing structure is to be evaluated, the general principles of this Standard may be applied. (See also Appendix B.)

1.4 DESIGN

1.4.1 Design data

The following design data shall be shown in the drawings:

(a) Reference number and date of issue of applicable design Standards.

(b) Live loads used in design.

(c) Exposure classification for durability.

(d) Fire-resistance rating, if applicable.

(e) Class and, where appropriate, grade designation of concrete.

(f) Grade, Ductility Class and type of reinforcement and grade and type of tendons.

(g) The appropriate earthquake design category, acceleration coefficient and site factor determined from AS 1170.4.

1.4.2 Design details

The drawings or specification for concrete members and structures shall include, as appropriate, the following:

(a) The shape and size of each member.

(b) The finish and method of control for unformed surfaces.

(c) Class of formwork in accordance with AS 3610 for the surface finish specified.

(d) The size, quantity and location of all reinforcement, tendons and structural fixings and the cover to each.

(e) Any required properties of the concrete.

(f) The curing procedure.

(g) The force required in each tendon, the maximum jacking force to be applied and the order in which tendons are to be stressed.

Accessed by SWINBURNE UNIVERSITY OF TECHNOLOGY on 15 Aug 2007

@Seismicisolation

@Seismicisolation

(h) The location and details of planned construction or movement joints, connections and splices, and the method to be used for their protection.

(i) The minimum period of time before stripping of forms and removal of shores.

(j) Any constraint on construction assumed in the design.

(k) Any other requirements.

1.5 CONSTRUCTION

All concrete structures, designed in accordance with this Standard, shall be constructed to ensure that all the requirements of the design as contained in the drawings and specifications are achieved.

1.6 DEFINITIONS

1.6.1 General

The definitions below apply to this Standard. Definitions peculiar to a particular Clause or Section are given in that clause or section and referred to below.

1.6.2 Administrative definitions

1.6.2.1 *Approved*

Except as may be otherwise stated, approved by the relevant Authority.

1.6.2.2 *Building authority or other relevant regulatory authority*

A body having statutory powers to control the design and erection of the structure in the area in which the structure is to be erected.

1.6.2.3 *Drawings*

The drawings forming part of the documents setting out the work to be executed.

1.6.2.4 *Specification*

The specification forming part of the documents setting out the work to be executed.

1.6.3 Technical definitions

1.6.3.1 *Action*

Any agent, such as imposed load, foundation movement or temperature gradient, which may act on a structure.

1.6.3.2 *Action effects*

The forces and moments, deformations, cracks and other effects, which are produced in a structure or in its component members by an action.

1.6.3.3 *Average ambient temperature*

The mean value of the daily maximum and minimum ambient temperatures at a site, averaged over the relevant period (i.e. $(\Sigma T_{max.} + \Sigma T_{min.})/ (2 \times \text{number of days})$).

1.6.3.4 *Cement*

Portland or blended cement complying with AS 3972, or a mixture of either of these with one or more supplementary cementitious materials complying with AS 3582.

1.6.3.5 *Characteristic strength*

That value of the material strength, as assessed by standard test, which is exceeded by 95% of the material.

Accessed by SWINBURNE UNIVERSITY OF TECHNOLOGY on 15 Aug 2007

@Seismicisolation

@Seismicisolation

1.6.3.6 *Composite concrete member*

A member consisting of concrete components constructed separately but structurally connected so that the member responds as a unit to applied actions.

1.6.3.7 *Concrete*

A mixture of cement, aggregates, and water, with or without the addition of chemical admixtures.

1.6.3.8 *Construction joint*

A joint, including a joint between precast segments, that is located in a part of a structure for convenience of construction and made so that the load-carrying capacity and serviceability of the structure will be unimpaired by the inclusion of the joint.

1.6.3.9 *Cover*

The distance between the outside of the reinforcing steel or tendons and the nearest permanent surface of the member excluding any surface finish.

NOTE: Unless otherwise noted, the tolerances on position of reinforcement and tendons given in Clause 19.5.3 apply.

1.6.3.10 *Creep factor*

The ratio of creep strain to elastic strain under conditions of constant stress.

1.6.3.11 *Critical tensile zone*

A region of a beam or slab where the design bending moment at the serviceability limit state ($M^*_{s.1}$), calculated with short-term load factor $\psi_s = 1.0$, equals or exceeds the critical moment for flexural cracking (M_{crit}), which is calculated assuming a flexural ensile strength of concrete equal to 3.0 MPa.

1.6.3.12 *Direct loading*

Loading on a structure that includes the self-weight of its component elements and externally applied loads.

1.6.3.13 *Ductility Class*

A designation relating to the ductility of reinforcement, ('L' designates 'low', 'N' designates 'normal').

1.6.3.14 *Effective depth*

The distance from the extreme compressive fibre of the concrete to the resultant tensile force in the reinforcing steel and tendons in that zone which will be tensile at the ultimate strength condition in pure bending.

1.6.3.15 *Effective span*

The lesser of ($L_n + D$) and L.

1.6.3.16 *Exposure classification*

See Clause 4.3.

1.6.3.17 *Fire-resistance level*

See Clause 5.2.

1.6.3.18 *Fire-resistance period*

See Clause 5.2

1.6.3.19 *Fire-separating function*

See Clause 5.2.

Accessed by SWINBURNE UNIVERSITY OF TECHNOLOGY on 15 Aug 2007

@Seismicisolation

@Seismicisolation

1.6.3.20 *Fitment*

A unit of reinforcement commonly known as a tie, stirrup, ligature or helix.

1.6.3.21 *Flat slab*

A continuous two-way solid or ribbed slab, with or without drop-panels, having at least two spans in each direction, supported internally by columns without beams and supported externally by walls, or columns with or without spandrel beams, or both.

1.6.3.22 *Footing*

A part of a structure in direct contact with and transmitting load to the supporting foundation.

1.6.3.23 *Foundation*

The soil, subsoil or rock, whether built-up or natural, upon which a structure is supported.

1.6.3.24 *Grout*

A mixture of cement and water, with or without the addition of sand, or chemical admixtures, proportioned to produce a pourable liquid without segregation of the constituents.

1.6.3.25 *Headed reinforcement*

A steel bar that achieves anchorage by means of a suitably sized head or end plate (see Clause 13.1.2.6).

1.6.3.26 *Hollow-core slab or wall*

See Clause 5.2.

1.6.3.27 *Initial force*

The force immediately after transfer, at a stated position in a tendon.

1.6.3.28 *Insulation*

See Clause 5.2.

1.6.3.29 *Integrity*

See Clause 5.2.

1.6.3.30 *Jacking force*

The force in a tendon measured at the jack.

1.6.3.31 *Lightweight concrete*

Concrete made with lightweight coarse and normal-weight fine aggregates and having a saturated surface-dry density in the range of 1800 kg/m^3 to 2100 kg/m^3.

1.6.3.32 *Limit state*

Any limiting condition for which the structure ceases to fulfil its intended function.

1.6.3.33 *Loadbearing member*

See Clause 5.2.

1.6.3.34 *Movement joint*

A joint that is made in or between portions of a structure for the specific purpose of permitting relative movement between the parts of the structure on either side of the joint.

1.6.3.35 *Normal-class concrete*

Concrete is specified primarily by a Standard strength grade and which complies with AS 1379.

Accessed by SWINBURNE UNIVERSITY OF TECHNOLOGY on 15 Aug 2007

@Seismicisolation

@Seismicisolation

1.6.3.36 *One-way slab*

A slab characterized by flexural action mainly in one direction.

1.6.3.37 *Plain concrete member*

A member either unreinforced or containing reinforcement but assumed to be unreinforced.

1.6.3.38 *Post-tensioning*

The tensioning of tendons after the concrete has hardened.

1.6.3.39 *Prestressed concrete*

Concrete into which internal stresses are induced deliberately by tendons and include concrete commonly referred to as partially prestressed.

1.6.3.40 *Prestressing steel*

See tendon.

1.6.3.41 *Pretensioning*

The tensioning of tendons before the concrete is placed.

1.6.3.42 *Reinforcement, reinforcing steel*

Steel bar, wire, or mesh but not tendons.

1.6.3.43 *Ribbed slab*

See Clause 5.2.

1.6.3.44 *Shear wall*

A wall that is intended to resist lateral forces acting in or parallel to the plane of the wall.

1.6.3.45 *Slag*

Ground granulated iron blast furnace slag complying with AS 3582.2.

1.6.3.46 *Special-class concrete*

Concrete specified to have certain properties or characteristics different from or additional to those of normal-class concrete, and which complies with AS 1379.

1.6.3.47 *Strength grade*

The numerical value of the characteristic compressive strength of concrete at 28 days (f'_c). (see Clauses 6.1.1.1 and 19.1.6)

1.6.3.48 *Structural adequacy*

See Clause 5.2.

1.6.3.49 *Tendon*

A wire, strand or bar or any discrete group of such wires, strands or bars, which is intended to be pretensioned or post-tensioned.

1.6.3.50 *Transfer*

The time of initial transfer of prestressing forces from the tendons to the concrete.

1.6.3.51 *Transmission length*

The length, at transfer, over which the stress in a pretensioned tendon builds up from zero at one end to its full value.

1.6.3.52 *Two-way slab*

A slab characterized by significant flexural action in two directions, usually at right angles to one another.

Accessed by SWINBURNE UNIVERSITY OF TECHNOLOGY on 15 Aug 2007

@Seismicisolation

@Seismicisolation

1.6.3.53 *Uniform elongation*

Uniform strain of reinforcement at maximum stress, corresponding to the onset of necking.

1.7 NOTATION

Every symbol used in this Standard is listed below. Symbols that occur in more than one clause are defined below and used in the various clauses without further reference. Symbols that occur only in one clause are defined in that clause as well as being listed below.

Unless a contrary intention appears, the following applies:

(a) The symbols used in this Standard shall have the meanings ascribed to them below, with respect to the structure, or member, or condition to which a clause is applied.

(b) Where non-dimensional ratios are involved, both the numerator and denominator are expressed in identical units.

(c) The dimensional units for length, force and stress in all expressions or equations are to be taken as millimetres (mm), newtons (N) and megapascals (MPa) respectively.

(d) An asterisk (*) placed after a symbol as a superscript (e.g. M^*) denotes a design action effect due to the design load.

Symbol		Definition
A_b	=	the cross-sectional area of a reinforcing bar
A_c	=	the cross-sectional area of the core of a column used in Appendix A
A_{ct}	=	the cross-sectional area of concrete in the tensile zone assuming the section is uncracked
A_g	=	the gross cross-sectional area of a member
A_m	=	an area (see Clause 8.3.3)
A_p	=	the cross-sectional area of prestressing steel
A_{pt}	=	the cross-sectional area of the tendons in that zone, which will be tensile under ultimate load conditions
A_s	=	the cross-sectional area of reinforcement
A_{sc}	=	the cross-sectional area of compression reinforcement
A_{st}	=	the cross-sectional area of tension reinforcement
	=	the cross-sectional area of reinforcement in the zone which would be in tension under the design loads other than prestressing or axial loads
$A_{st.min.}$	=	the minimum cross-sectional area of reinforcement permitted in a beam in tension, or in a critical tensile zone of a beam or slab in flexure
A_{sv}	=	the cross-sectional area of shear reinforcement
$A_{sv.min.}$	=	the cross-sectional area of minimum shear reinforcement
A_{sw}	=	the cross-sectional area of the bar forming a closed tie

Accessed by SWINBURNE UNIVERSITY OF TECHNOLOGY on 15 Aug 2007

@Seismicisolation

@Seismicisolation

A_t	=	the area of a polygon (see Clause 8.3.5)
A_{tr}	=	the cross-sectional to area of transverse reinforcement perpendicular to the layer of bars within a spacing, *s* (see Clause 13.2.5)
A_1	=	a bearing area (see Clause 12.3)
A_2	=	a supplementary area (see Clause 12.3)
A_1/A_2	=	a ratio of areas (see Clause 8.4.2)
a	=	a distance
a_s	=	the length of a span support (see Clause 7.1.2)
a_v	=	the distance from the section at which shear is being considered to the face of the nearest support (see Clause 8.2.7.1)
b	=	the width of a cross-section
b_c	=	the width of the compression strut (see Clause 12.1.2.2)
b_{ef}	=	the effectve width of a compression face or flange of a member
b_f	=	the width of the shear interface (see Clause 8.4.3)
b_l	=	a member size (see Paragraph A12.3.3.2, Appendix A)
b_o	=	the width of a critical opening (see Clause 9.2.1)
b_t	=	a member size (see Paragraph A12.3.3.2, Appendix A)
b_v	=	the effective width of a web for shear (see Clause 8.2.6)
b_w	=	a width of the web; or
	=	the minimum thickness of the wall of a hollow section (see Clause 8.3.3)
c	=	the cover to reinforcing steel or tendons
D	=	the overall depth of a cross-section in the plane of bending
D_b	=	the overall depth of a spandrel beam
D_c	=	the smaller column dimension (see Clause 5.6.3.2 and 10.7.3.3)
D_g	=	the greater column dimension (see Clause 5.6.3.2)
D_s	=	the overall depth of a slab or drop panel
d	=	the effective depth of a cross-section (see Clause 1.6.3)
d_b	=	the nominal diameter of a bar, wire, or tendon
d_c	=	the depth of a compression strut (see Clause 12.1.2.2)
d_d	=	the diameter of a prestressing duct (see Clause 8.2.6)
d_o	=	the distance from the extreme compression fibre of the concrete to the centroid of the outermost layer of tensile reinforcement or tendons but for prestressed concrete members not less than 0.8*D*
d_p	=	the distance from the extreme compressive fibre of the concrete to the centroid of the tendons in that zone which will be tensile under ultimate strength conditions
d_{sc}	=	the distance from the extreme compressive fibre of the concrete to the centroid of compressive reinforcement (see Clause 8.1.5)
E_c	=	the mean value of the modulus of elasticity of concrete at 28 days

Accessed by SWINBURNE UNIVERSITY OF TECHNOLOGY on 15 Aug 2007

@Seismicisolation

@Seismicisolation

E_{cj} = the mean value of the modulus of elasticity of concrete at the appropriate age, determined in accordance with Clause 6.1.2

E_p = the modulus of elasticity of tendons, determined in accordance with Clause 6.3.2

E_s = the modulus of elasticity of reinforcement, determined in accordance with Clause 6.2.2

e = the eccentricity of axial force from a centroidal axis; or

= the base of Napierian logarithms

e_a = an additional eccentricity (see Clause 11.4.4)

F^*_c = the design force in the compression zone due to flexure (see Clause 8.3.6)

F_d = a uniformly distributed design load, factored for strength or serviceability as appropriate

$F_{d.ef}$ = the effective design service load per unit length or area, used in serviceability design

$f_{c.28}$ = the mean value of the compressive strength of concrete at 28 days

$f_{c.cal}$ = the calculated compressive strength of concrete in a compression strut (see Clause 12.1.2.2)

f_{cm} = the mean value of the compressive strength of concrete at the relevant age

f_{cp} = the compressive strength of concrete at transfer

f_{cs} = the maximum shrinkage-induced stress on the uncracked section at the extreme fibre at which cracking occurs (see Clause 8.5.3.1).

f_{cv} = a concrete shear strength (see Clause 9.2.3)

f_p = the tensile strength of tendons determined in accordance with Clause 6.3.1

f_{py} = the yield strength of tendons determined in accordance with Clause 6.3.1

f_s = the maximum tensile stress permitted in the reinforcement immediately after the formation of a crack

f_{scr} = the tensile stress in reinforcement at a cracked section, due to the short-term load combination for the serviceability limit states when direct loads are applied

$f_{scr.1}$ = the tensile stress in reinforcement at a cracked section, due to the short-term load combination for the serviceability limit states, calculated with $\psi_s = 1.0$, when direct loads are applied

f_{sy} = the yield strength of reinforcing steel, determined in accordance with Clause 6.2.1

$f_{sy.f}$ = the yield strength of reinforcement used as fitments, determined in accordance with Clause 6.2.1

f'_c = the characteristic compressive cylinder strength of concrete at 28 days

f'_{cf} = the characteristic flexural tensile strength of concrete determined in accordance with Clause 6.1.1.2

f'_{ct} = the characteristic principal tensile strength of concrete determined in accordance with Clause 6.1.1.3

G = the dead load

g = the dead load per unit length or area

Accessed by SWINBURNE UNIVERSITY OF TECHNOLOGY on 15 Aug 2007

@Seismicisolation

@Seismicisolation

H_w = the overall height of a wall

H_{wu} = the unsupported height of a wall

H_{we} = the effective height of a wall

I = a second moment of area, of the gross concrete cross-section about the centroidal axis

I_c, I_f = the second moment of area of a column and a flexural member respectively

I_{cr} = the second moment of area of a cracked section with the reinforcement transformed to an equivalent area of concrete

I_{ef} = an effective second moment of area (see Clause 8.5.3)

J_t = a torsional modulus

j = a duration in days (see Clause 6.3.4.3)

k = a coefficient, ratio, or factor used with and without numerical subscripts

k_{cs} = a factor used in serviceability design to take account of the long-term effects of creep and shrinkage

k_m = a coefficient calculated in accordance with Clause 10.4.2

k_r = a ratio (see Clause 12.2.4)

k_s = a coefficient that takes into account the shape of the stress distribution within the section immediately prior to cracking, as well as the effect of non-uniform self-equilibrating stresses

k_u = the neutral axis parameter, being the ratio, at ultimate strength and under any combination of bending and compression, of the depth to the neutral axis from the extreme compressive fibre, to d

k_{uo} = the ratio, at ultimate strength, of the depth to the neutral axis from the extreme compressive fibre, to d_o

L = centre-to-centre distance between the supports of a flexural member

L_e = the effective length of a column

L_{ef} = the effective span of a member, taken as the lesser of (L_n + D) and L for a beam or slab; or

= L_n + D/2 for a cantilever

L_l = the distance between centres of lateral restraints

L_n = the length of clear span in the direction in which moments are being determined, measured face-to-face of supporting beams, columns or walls, or for a cantilever, the clear projection

L_o = a length of span (see Clause 7.4.2)

L'_o = a length of span (see Clause 7.4.5)

L_p = the development length for pretensioned tendons

L_{pa} = a length of tendon (see Clause 6.4.2.3)

L_s = the span between formwork supports (see Clause 19.6.2.4)

L_{st} = the development length of a bar for a tensile stress less than the yield stress

$L_{sy.c}$($L_{sy.t}$) = the development length for compression (tension), being the length of embedment required to develop the yield strength of a bar in compression (tension)

Accessed by SWINBURNE UNIVERSITY OF TECHNOLOGY on 15 Aug 2007

@Seismicisolation

@Seismicisolation

L_t = the width of a design strip (see Clause 7.1.2)

L_u = the unsupported length of a column, taken as the clear distance between the faces of members capable of providing lateral support to the column. Where column capitals or haunches are present, L_u is measured to the lowest extremity of the capital or haunch

L_w = the overall length of a wall

L_x = the shorter effective span of a slab supported on four sides

L_y = the longer effective span of a slab supported on four sides

M^* = the bending moment at a cross-section calculated using the design load for strength specified in Clause 3.3, i.e. the design bending moment

M^*_v = the design bending moment to be transferred from a slab to a support

M^*_x, M^*_y = the design bending moment in a column about the major and minor axes respectively; or

= the positive design bending moment, at midspan in a slab, in the x and y direction respectively

M^*_1, M^*_2 = the smaller and larger design bending moment respectively at the ends of a column

M_{cr} = the bending moment causing cracking of the section with due consideration to prestress, restrained shrinkage and temperature stresses

M_{crit} = the critical moment for flexural cracking calculated assuming a flexural tensile strength of concrete equal to 3.0 MPa

M_o = the total static moment in a span (see Clause 7.4.2); or

= the decompression moment (see Clause 8.2.7.2)

M^*_s = the design bending moment at the serviceability limit state

$M^*_{s.1}$ = the design bending moment at the serviceability limit state, calculated with $\psi_s = 1.0$

M_u = the ultimate strength in bending at a cross-section of an eccentrically loaded compression member

M_{ub} = the particular ultimate strength in bending when $k_{uo} = 0.003/(0.003 + f_{sy}/E_s)$

M_{ud} = the reduced ultimate strength in bending without axial force, at a cross-section (see Clause 8.1.3(c))

M_{uo} = the ultimate strength in bending without axial force, at a cross-section

$(M_{uo})_{min.}$ = the minimum strength in bending at a critical cross-section (see Clause 8.1.4.1)

M_{ux}, M_{uy} = the ultimate strength in bending about the major and minor axes respectively of a column under the design axial force N^*

N^* = the axial compressive or tensile force on a cross-section calculated using the design load for strength specified in Clause 3.3, i.e. the design axial force

N_c = the buckling load used in column design

N_u = the ultimate strength in compression, or tension, at a cross-section of an eccentrically loaded compression or tension member respectively

N_{ub} = the particular ultimate strength in compression of a cross-section when $k_{uo} = 0.003/(0.003 + f_{sy}/E_s)$

Accessed by SWINBURNE UNIVERSITY OF TECHNOLOGY on 15 Aug 2007

@Seismicisolation

@Seismicisolation

N_{uo} = the ultimate strength in compression without bending, of an axially loaded cross-section

N_{uot} = the ultimate strength in tension without bending, of an axially loaded cross-section

n = the number of bars uniformly spaced around a helix (see Clause 13.2.5)

P = the force in the tendons; or

= the maximum force in the anchorage (see Clause 12.2.4)

P_v = the vertical component of the prestressing force

p = a reinforcement ratio

p_w = a reinforcement ratio in a wall

Q = the live load (including impact, if any)

q = the live load per unit length or area

R = the design relaxation of a tendon, determined in accordance with Clause 6.3.4.3

R_b = the basic relaxation of a tendon, determined in accordance with Clause 6.3.4.2

R_u = the ultimate strength (see Clause 2.3)

r = the radius of gyration of a cross-section

S^* = the design action effect (see Clause 2.3)

s = the centre-to-centre spacing of shear or torsional reinforcement, measured parallel to the longitudinal axis of a member; or

= the standard deviation; or

= the maximum spacing of transverse reinforcement within $L_{sy.c}$, or spacing of stirrups or ties, or spacing of successive turns of a helix, all measured centre to centre, mm (see Clause 13.2.5)

T = a temperature; or

= the force resultant of tensile stresses (see Clause 12.2.4)

T^* = the torsional moment at a cross-section calculated using the design load for strength specified in Clause 3.3, i.e. the design torsional moment

T_u = the ultimate torsional strength

T_{uc} = the ultimate torsional strength of a beam without torsional reinforcement and in the presence of shear

T_{us} = the ultimate torsional strength of a beam with torsional reinforcement, (see Clause 8.3.5)

$T_{u.max.}$ = the ultimate torsional strength of a beam limited by web crushing failure

t_{nom} = the nominal thickness of topping (see Clause 5.10.2)

t_d = a difference in thicknesses (see Clause 5.10.2)

t_h = the hypothetical thickness of a member used in determining creep and shrinkage, taken as $2A_g/u_e$

t_w = the thickness of a wall

Accessed by SWINBURNE UNIVERSITY OF TECHNOLOGY on 15 Aug 2007

@Seismicisolation

@Seismicisolation

u	=	the length of the critical shear perimeter for two-way action (see Clause 9.2.1)
u_e	=	the exposed perimeter of a member cross-section plus half the perimeter of any closed voids contained therein, used to calculate t_h
u_t	=	the perimeter of the polygon defined for A_t (see Clause 8.3.6)
V^*	=	the shear force at a section, calculated using the design load for strength specified in Clause 3.3, i.e. the design shear force
V_o	=	the shear force which would occur at a section when the bending moment at that section was equal to the decompression moment M_o
V_t	=	the shear force producing a principal tensile stress (see Clause 8.2.7.2)
V_u	=	the ultimate shear strength
$V_{u.max.}$	=	the ultimate shear strength limited by web crushing failure
$V_{u.min.}$	=	the ultimate shear strength of a beam provided with minimum shear reinforcement (see Clause 8.2.9)
V_{uc}	=	the ultimate shear strength excluding shear reinforcement (see Clause 8.2.7)
V_{uf}	=	the ultimate longitudinal shear strength at an interface
V_{uo}	=	the ultimate shear strength of a slab with no moment transfer
V_{us}	=	the contribution by shear reinforcement to the ultimate shear strength of a beam or wall (see Clauses 8.2.10, 11.5.5)
X	=	a dimension (see Figure 9.2.1)
x	=	the shorter overall dimension of a rectangular part of a cross-section; or
	=	the smaller dimension of a component rectangle of a T-, L-, or I-section
Y	=	a dimension (see Figure 9.2.1)
y	=	the longer overall dimension of a rectangular part of a cross-section; or
	=	the larger dimension of a component rectangle of a T-, L-, or I-section
y_1	=	the larger dimension of a closed rectangular tie
Z	=	the section modulus of an uncracked cross-section (see Clause 8.1.4.1)
α	=	a coefficient
α_n	=	a coefficient (see Clause 10.6.5)
α_{tot}	=	an angular value in radians (see Clause 6.4.2.3)
α_v	=	the angle between the inclined shear reinforcement and the longitudinal tensile reinforcement
β	=	a coefficient with or without numerical subscripts; or
	=	a fixity factor
β_d	=	a factor (see Clause 10.4.3)
β_h	=	a ratio (see Clause 9.2.1)
β_p	=	an estimated angular deviation in radians per metre (see Clause 6.4.2.3)
β_x, β_y	=	the short and long span bending moment coefficients respectively, for slabs supported on four sides

Accessed by SWINBURNE UNIVERSITY OF TECHNOLOGY on 15 Aug 2007

@Seismicisolation

@Seismicisolation

γ	=	the ratio, under design bending or combined bending and compression, of the depth of the assumed rectangular compressive stress block to $k_u d$
γ_1, γ_2	=	the column end restraint coefficients determined in accordance with Clause 10.5.3
Δ	=	a deflection
δ, δ_b, δ_s	=	moment magnifiers for slenderness effects, (see Clause 10.4)
ε	=	a strain
ε_{cc}	=	the strain due to concrete creep (see Clause 6.4.3.3)
ε_{cs}	=	the design shrinkage strain determined in accordance with Clause 6.1.7.2
$\varepsilon_{cs.b}$	=	the basic shrinkage strain determined in accordance with Clause 6.1.7.1
ε_{su}	=	the uniform strain at maximum stress, corresponding to the onset of necking
θ_v, θ_t	=	the angle between the concrete compression strut and the longitudinal axis of the member (see Clauses 8.2.10, 8.3.5)
λ_{uc}	=	a ratio of loads (see Clause 10.4.3)
μ	=	the friction curvature coefficient (see Clause 6.4.2.3)
ν	=	Poisson's ratio for concrete, determined in accordance with Clause 6.1.5
ρ	=	the density of concrete, in kilograms per cubic metre (kg/m^3), determined in accordance with Clause 6.1.3
σ_{ci}	=	a sustained concrete stress (see Clause 6.4.3.3)
σ_{cp}	=	the average intensity of effective prestress in concrete
$\sigma_{cp.f}$	=	a compressive stress at the extreme fibre (see Clause 8.2.7.2)
σ_{pa}	=	the stress at a point in the tendon (see Clause 6.4.2.3)
$\sigma_{p.ef}$	=	the effective stress in the tendon (see Clause 8.1.6)
σ_{pi}	=	the stress in the tendon immediately after transfer
σ_{pj}	=	the stress in the tendon at the jacking end (see Clause 6.4.2.2)
σ_{pu}	=	the maximum stress which would be reached in a tendon at ultimate strength of a flexural member
σ_{st}	=	a calculated tensile stress in reinforcement (see Clause 13.1.2.2)
ϕ	=	the strength reduction factor (see Clause 2.3)
ϕ_{cc}	=	the design creep factor determined in accordance with Clause 6.1.8.2
$\phi_{cc.b}$	=	the basic creep factor determined in accordance with Clause 6.1.8.1
ψ_c	=	the combination live load factor used in assessing the design load for strength
ψ_s	=	the short-term live load factor used in assessing the design load for serviceability
ψ_l	=	the long-term live load factor used in assessing the design load for serviceability

Accessed by SWINBURNE UNIVERSITY OF TECHNOLOGY on 15 Aug 2007

@Seismicisolation

@Seismicisolation

SECTION 2 DESIGN REQUIREMENTS AND PROCEDURES

2.1 DESIGN REQUIREMENTS

2.1.1 Aim

The aim of structural design is to provide a structure that is durable, serviceable and has adequate strength while serving its intended function and that satisfies other relevant requirements such as robustness, ease of construction and economy.

A structure is durable if it withstands expected wear and deterioration throughout its intended life without the need for undue maintenance.

A structure is serviceable and has adequate strength if the probability of loss of serviceability and the probability of structural failure are both acceptably low throughout its intended life.

2.1.2 Requirements

The design of a structure and its component members shall take into account, as appropriate, stability, strength, serviceability, durability, fire resistance and any other relevant design requirements, in accordance with the procedures given in this Section.

2.2 DESIGN FOR STABILITY

The structure, as a whole, and its parts shall be designed to prevent instability due to overturning, uplift and sliding, as follows:

(a) The design action effect and the design resistance effect shall be determined from Clause 3.2.

(b) The whole or part of the structure shall be proportioned so that its design resistance effect is not less than the design action effect.

2.3 DESIGN FOR STRENGTH

The structure and its component members shall be designed for strength, as follows:

(a) The loads and other actions shall be determined from Clause 3.1 and the design load for strength shall be determined from Clause 3.3.

(b) The design action effect (S^*), due to the design load for strength, shall be determined by an appropriate analysis in accordance with the requirements of Section 7.

(c) The design strength (ϕR_u), shall be determined in accordance with the requirements of Sections 8 to 15, as appropriate, where ϕ is a strength reduction factor, which shall not exceed the appropriate value given in Table 2.3.

(d) The member shall be proportioned so that its design strength is not less than the design action effect, i.e. $\phi R_u \geq S^*$.

2.4 DESIGN FOR SERVICEABILITY

2.4.1 General

The structure and its component members shall be designed for serviceability by controlling or limiting deflection, lateral drift, cracking and vibration, as appropriate, in accordance with the relevant requirements of Clauses 2.4.2 to 2.4.5.

Accessed by SWINBURNE UNIVERSITY OF TECHNOLOGY on 15 Aug 2007

@Seismicisolation

@Seismicisolation

2.4.2 Deflection limits for beams and slabs

The deflection of beams and slabs under service conditions shall be controlled as follows:

(a) A limit for the calculated deflection of the member shall be chosen appropriate to the structure and its intended use. The values chosen shall not exceed the relevant value given in Table 2.4.2.

(b) The member shall be designed so that, under the design load for serviceability given in Clause 3.4, the deflections calculated in accordance with Section 8 or 9, as appropriate, do not exceed the chosen value.

TABLE 2.3

STRENGTH REDUCTION FACTORS

	Type of action effect	Strength reduction factor (ϕ)
(a)	Axial force without bending—	
	(i) Tension	0.8
	(ii) Compression	0.6
(b)	Bending without axial tension or compression where:	
	(i) $k_u \leq 0.4$	0.8
	(ii) $k_u > 0.4$	$0.8\ M_{ud}/M_{uo} \geq 0.6$
(c)	Bending with axial tension	$\phi + [(0.8 - \phi)(N_u/N_{uot})]$ and ϕ is obtained from (b)
(d)	Bending with axial compression where:	
	(i) $N_u \geq N_{ub}$	0.6
	(ii) $N_u < N_{ub}$	$0.6 + [(\phi - 0.6)\ (1 - N_u/N_{ub})]$ and ϕ is obtained from (b)
(e)	Shear	0.7
(f)	Torsion	0.7
(g)	Bearing	0.6
(h)	Compression and tension in strut and tie action	0.7
(i)	Bending, shear and compression in plain concrete	0.6
(j)	Bending, shear and tension in fixings	0.6

2.4.3 Lateral drift

Unbraced frames and multistorey buildings subject to lateral loading shall be designed to limit calculated inter-storey lateral drift to 1/500 of the storey height.

2.4.4 Cracking

The cracking of beams or slabs under service conditions shall be controlled in accordance with the requirements of Clause 8.6 or 9.4 as appropriate.

2.4.5 Vibration

The vibration of beams or slabs under service conditions shall be controlled in accordance with the requirements of Clause 8.7 or 9.5 as appropriate.

Accessed by SWINBURNE UNIVERSITY OF TECHNOLOGY on 15 Aug 2007

@Seismicisolation

@Seismicisolation

TABLE 2.4.2

LIMITS FOR CALCULATED DEFLECTION OF BEAMS AND SLABS

Type of member	Deflection to be considered	Deflection limitation (Δ/L_{ef}) for spans (Notes 1 and 2)	Deflection limitation (Δ/L_{ef}) for cantilevers (Note 3)
All members	The total deflection	1/250	1/125
Members supporting masonry partitions	The deflection which occurs after the addition or attachment of the partitions	1/500 where provision is made to minimize the effect of movement, otherwise 1/1000	1/250 where provision is made to minimize the effect of movement, otherwise 1/500
Bridge members	The live load (and impact) deflection	1/800	1/400

NOTES:

1 In flat slabs, the deflection to which the above limits apply is the theoretical deflection of the line diagram representing the idealized frame defined in Clause 7.5.2.

2 Deflection limits given may not safeguard against ponding.

3 For cantilevers, the values of Δ/L_{ef} given in this Table apply only if the rotation at the support is included in the calculation of Δ.

2.5 DESIGN FOR STRENGTH AND SERVICEABILITY BY LOAD TESTING OF A PROTOTYPE

Notwithstanding the requirements of Clauses 2.3 and 2.4, a structure or a component member may be designed for strength or serviceability, or both, by load testing a prototype in accordance with Appendix B using appropriate design loads determined from Clauses 3.3 or 3.4. If this alternative procedure is adopted, the requirements of Clause 2.2 and of Clauses 2.6 to 2.8 as appropriate, shall also apply.

2.6 DESIGN FOR DURABILITY

The structure and its component members shall be designed for durability in accordance with the requirements of Section 4.

2.7 DESIGN FOR FIRE RESISTANCE

The structure and its component members shall be designed for the appropriate fire resistance in accordance with Section 5.

2.8 OTHER DESIGN REQUIREMENTS

Requirements such as fatigue, progressive collapse and any special performance requirements shall be considered where relevant and if significant, shall be taken into account in the design of the structure in accordance with the principles of this Standard and appropriate engineering principles.

The design of bridges for loads resulting from floods or collision shall be carried out in accordance with HB77.

Where seismic actions are a consideration, the additional requirements of Appendix A shall apply.

Accessed by SWINBURNE UNIVERSITY OF TECHNOLOGY on 15 Aug 2007

@Seismicisolation

@Seismicisolation

SECTION 3 LOADS AND LOAD COMBINATIONS FOR STABILITY, STRENGTH AND SERVICEABILITY

3.1 LOADS AND OTHER ACTIONS

3.1.1 Loads

The design of a structure for stability, strength and serviceability shall take account of the action effects directly arising from the following loads:

(a) For structures generally, the dead and live, wind, snow and earthquake loads specified in AS 1170.1, AS 1170.2, AS 1170.3 and AS 1170.4 respectively.

(b) For housing, the wind loads specified in AS 4055 may be used, if applicable.

(c) For bridges, if applicable, loads specified in HB77.

(d) For retaining structures, earth pressure and liquid pressure, as applicable.

(e) Accidental loading, if applicable.

(f) Any additional load that may be required.

3.1.2 Construction loads

Loading conditions, which may arise from construction activities and which adversely affect the requirements for stability, strength or serviceability, shall be taken into account. If appropriate, the values assumed for design purposes shall be specified (see also Clause 19.6.2).

3.1.3 Other actions

Any action which may significantly affect the stability, strength or serviceability of the structure, including but not limited to the following, shall be taken into account:

(a) Foundation movements.

(b) Temperature changes and gradients.

(c) Axial shortening.

(d) Dynamic effects.

(e) Shrinkage or expansion of concrete during setting or subsequently.

(f) Creep of concrete.

The value of any of the above actions shall be appropriate to the design state being considered.

3.2 LOAD COMBINATIONS FOR STABILITY DESIGN

The design action effects and the design resistance effects for stability design shall be determined as follows:

(a) The loads and other actions determined from Clause 3.1 shall be subdivided into components tending to cause instability and components tending to resist instability.

(b) The design action effect shall be calculated from the components of the loads and other actions tending to cause instability, factored and combined in accordance with Clause 3.3.

(c) The design resistance effect shall be calculated from 0.8 times the components of the unfactored loads and other actions tending to resist instability.

Accessed by SWINBURNE UNIVERSITY OF TECHNOLOGY on 15 Aug 2007

@Seismicisolation

@Seismicisolation

3.3 LOAD COMBINATIONS FOR STRENGTH DESIGN

3.3.1 Structures other than bridges

The design load for strength design of structures other than bridges, shall be determined from the load combinations for the strength limit states given in AS 1170.1, except that the combination

$$1.25G + W_u + \psi_c Q$$

may be replaced by the more severe of—

$1.4G$; and

$$1.1G + W_u + \psi_c Q$$

Where applicable, the prestressing force (P) shall be included with a load factor of unity in each load combination, except for the case of dead load plus prestress at transfer, when the more severe of—

$1.15G + 1.15P$; and

$0.8G + 1.15P$

shall apply (see also Clause 7.6.7).

3.3.2 Bridges

Where applicable, the design loads for the strength design of bridges shall be determined from the load combinations given in HB77.

3.4 LOAD COMBINATIONS FOR SERVICEABILITY DESIGN

The design load for serviceability design for deflection shall be taken from the appropriate combinations of factored loads for short-term and long-term effects given in AS 1170.1. Where applicable, the prestressing force (P) shall be included with a load factor of unity in all load combinations (see also Clause 7.6.7).

3.5 LOAD COMBINATIONS FOR FIRE-RESISTANCE DESIGN

The combination of factored loads to be used for fire resistance in conjunction with Clause 5.8 and 5.9 shall be as given in AS 1170.1 for the fire limit state.

Accessed by SWINBURNE UNIVERSITY OF TECHNOLOGY on 15 Aug 2007

@Seismicisolation

@Seismicisolation

SECTION 4 DESIGN FOR DURABILITY

4.1 APPLICATION OF SECTION

The requirements of this Section apply to plain, reinforced, and prestressed, concrete structures and members with a design life of 40 to 60 years.

NOTES:

1 More stringent requirements would be appropriate for structures with a design life in excess of 60 years (e.g. monumental structures), while some relaxation of the requirements may be acceptable for structures with a design life less than 40 years (e.g. temporary structures).

2 Durability is a complex topic and compliance with these requirements may not be sufficient to ensure a durable structure. The Commentary (AS 3600 Supp 1) contains background to, and further guidance on, the provisions of this Section.

4.2 DESIGN FOR DURABILITY

4.2.1 General

Durability shall be allowed for in design by determining the exposure classification in accordance with Clause 4.3 and, for that exposure classification, complying with the appropriate requirements for—

(a) concrete quality and curing, in accordance with Clauses 4.4 to 4.6;

(b) chemical content restrictions, in accordance with Clause 4.9; and

(c) cover, in accordance with Clause 4.10.

4.2.2 Additional requirements

In addition to the requirements specified in Clause 4.2.1—

(a) members subject to abrasion from traffic (e.g. pavements and floors) shall satisfy the requirements of Clause 4.7; and

(b) members subject to cycles of freezing and thawing shall satisfy the requirements of Clause 4.8.

4.3 EXPOSURE CLASSIFICATION

4.3.1 General

The following is applicable:

(a) The exposure classification for a surface of a member shall be determined from Table 4.3 and Figure 4.3.

(b) For determining concrete quality requirements in accordance with Clauses 4.4 to 4.6 and Clause 4.9, as appropriate, the exposure classification for the member shall be taken as the most severe exposure of any of its surfaces.

(c) For determining cover requirements for corrosion protection in accordance with Clause 4.10.3, the exposure classification shall be taken as the classification for the surface from which the cover is measured.

NOTE: In Table 4.3, classifications A1, A2, B1, B2 and C represent increasing degrees of severity of exposure, while classification U represents an exposure environment not specified in the table but for which a degree of severity of exposure should be appropriately assessed. Protective surface coatings may be taken into account in the assessment of the exposure classification.

4.3.2 Concession for exterior exposure of a single surface

Where the exterior exposure is essentially only one surface of a member, concrete of the next lower grade than would otherwise be required by Clause 4.4 or 4.5 may be used, provided that the cover from that surface is increased by—

(a) 20 mm from the value required by Clause 4.10.3.2; or

(b) 15 mm from the value required by Clause 4.10.3.4.

Accessed by SWINBURNE UNIVERSITY OF TECHNOLOGY on 15 Aug 2007

@Seismicisolation

@Seismicisolation

TABLE 4.3

EXPOSURE CLASSIFICATIONS

Surface and exposure environment	Exposure classification	
	Reinforced or prestressed concrete members (Note 1)	Plain concrete members (Note 1)
1 Surface of members in contact with the ground		
(a) Members protected by a damp-proof membrane	A1	A1
(b) Residential footings in non-aggressive soils	A1	A1
(c) Other members in non-aggressive soils	A2	A1
(d) Members in aggressive soils (Note 2)	U	U
2 Surfaces of members in interior environments		
(a) Fully enclosed within a building except for a brief period of weather exposure during construction;	A1	A1
(b) In industrial buildings, the member being subject to repeated wetting and drying	B1	A1
3 Surfaces of members in above-ground exterior environments		
In areas that are:		
(a) Inland (> 50 km from coastline) environment being—		
(i) non-industrial and arid climatic zone (Notes 3 and 4)	A1	A1
(ii) non-industrial and temperate climatic zone	A2	A1
(iii) non-industrial and tropical climatic zone	B1	A1
(iv) industrial and any climatic zone	B1	A1
(b) Near-coastal (1 km to 50 km from coastline), any climatic zone	B1	A1
(c) Coastal (Up to 1 km from coastline but excluding tidal and splash zones) (Note 5), any climatic zone	B2	A1
4 Surfaces of members in water		
(a) In fresh water	B1	A1
(b) In sea water—		
(i) permanently submerged	B2	U
(ii) in tidal or splash zones	C	U
(c) In soft or running water	U	U
5 Surfaces of members in other environments		
Any exposure environment not otherwise described in Items 1 to 4	U	U

NOTES:

1 In this context, reinforced concrete includes any concrete containing metals that rely on the concrete for protection against environmental degradation. Plain concrete members containing reinforcement or other metallic embedment should, therefore, be treated as reinforced members, when considering durability.

2 Permeable soils with a pH < 4.0, or with ground water containing more than 1 g per litre of sulphate ions, would be considered aggressive. Salt-rich soils in arid areas should be considered as exposure classification C.

3 The climatic zones referred to are those given in Figure 4.3, which is a simplified version of Plate 8 of the Bureau of Meteorology publication 'Climate of Australia', 1982 Edition.

4 Industrial refers to areas that are within 3 km of industries that discharge atmospheric pollutants.

5 For the purpose of this Table, the coastal zone includes locations within 1 km of the shoreline of large expanses of salt water (e.g. Port Phillip Bay, Sydney Harbour east of the Spit and Harbour Bridges, Swan River west of the Narrows Bridge). Where there are strong prevailing winds or vigorous surf, the distance should be increased beyond 1 km and higher levels of protection should be considered. Proximity to small salt water bays, estuaries and rivers may be disregarded.

Accessed by SWINBURNE UNIVERSITY OF TECHNOLOGY on 15 Aug 2007

@Seismicisolation

@Seismicisolation

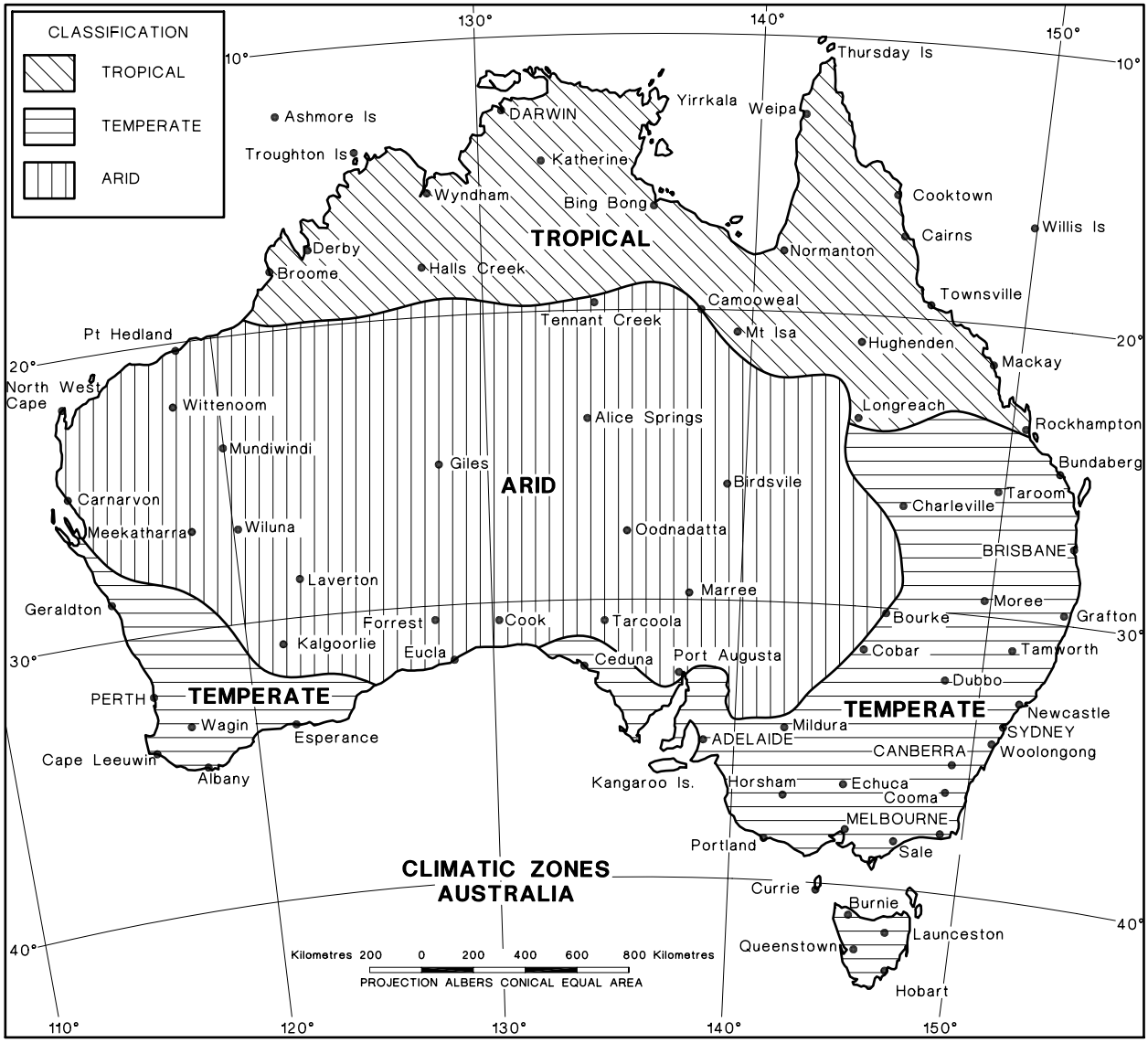

Note: 'Woolongong', on the east coast of Australia, should read 'Wollongong'.

FIGURE 4.3 CLIMATIC ZONES REFERRED TO IN TABLE 4.3

4.4 REQUIREMENTS FOR CONCRETE FOR EXPOSURE CLASSIFICATIONS A1 AND A2

Members subject to exposure classifications A1 or A2 shall be initially cured continuously for at least three days under ambient conditions, or cured by accelerated methods, so that the average compressive strength of the concrete at the completion of curing is not less than 15 MPa.

Concrete in the member shall have an f'_c not less than—

(a) 20 MPa for exposure classification A1; or

(b) 25 MPa for exposure classification A2.

Accessed by SWINBURNE UNIVERSITY OF TECHNOLOGY on 15 Aug 2007

@Seismicisolation

@Seismicisolation

4.5 REQUIREMENTS FOR CONCRETE FOR EXPOSURE CLASSIFICATIONS B1, B2 AND C

Members subject to exposure classifications B1, B2 or C shall be initially cured continuously for at least 7 days under ambient conditions, or cured by accelerated methods so that the average compressive strength of the concrete at the completion of curing is not less than 20 MPa for exposure classification B1, 25 MPa for exposure classifications B2, 32 MPa for exposure classification C and 40 MPa for 65 MPa concrete.

Concrete in the member shall have an f'_c not less than—

(a) 32 MPa for exposure classification B1;

(b) 40 MPa for exposure classification B2; or

(c) 50 MPa for exposure classification C.

In addition, for special-class concrete, the minimum cement content and the cement type shall be specified.

Where the requirement of Item (c) cannot be satisfied due to inadequate aggregate strength, concrete with f'_c not less than 40 MPa may be used for exposure classification C, provided that the cement content of the mix is not less than 470 kg/m^3 and the covers required by Clause 4.10.3 are increased by 10 mm.

4.6 REQUIREMENTS FOR CONCRETE FOR EXPOSURE CLASSIFICATION U

Concrete in members subject to exposure classification U shall be specified to ensure durability under the particular exposure environment.

4.7 ADDITIONAL REQUIREMENTS FOR ABRASION

In addition to the other durability requirements of this Section, concrete for members subject to abrasion from traffic shall have a characteristic compressive strength not less than the applicable value given in Table 4.7.

TABLE 4.7

STRENGTH REQUIREMENTS FOR ABRASION

Member and/or traffic	Minimum characteristic strength (f'_c) MPa
Footpaths and residential driveways	20
Commercial and industrial floors not subject to vehicular traffic	25
Pavements or floors subject to:	
(a) Light pneumatic-tyred traffic (vehicles up to 3 t gross mass)	25
(b) Medium or heavy pneumatic-tyred traffic (vehicles heavier than 3 t gross mass)	32
(c) Non-pneumatic-tyred traffic	40
(d) Steel-wheeled traffic	To be assessed but not less than 40

NOTE: f'_c refers to the strength of the wearing course.

Accessed by SWINBURNE UNIVERSITY OF TECHNOLOGY on 15 Aug 2007

@Seismicisolation

@Seismicisolation

4.8 ADDITIONAL REQUIREMENTS FOR FREEZING AND THAWING

In addition to the other durability requirements of this Section, where the surface exposure includes exposure to cycles of freezing and thawing, concrete in the member shall—

(a) have an f'_c not less than—

(i) 32 MPa for occasional exposure (< 25 cycles p.a.); or

(ii) 40 MPa for frequent exposure (≥ 25 cycles p.a.); and

(b) contain a percentage of entrained air not outside the following ranges—

(i) for 10 mm to 20 mm nominal size aggregate ..... 8% to 4%; or

(ii) for 40 mm nominal size aggregate ..... 6% to 3%,

where the percentage of entrained air is determined in accordance with AS 1012.4.

4.9 RESTRICTIONS ON CHEMICAL CONTENT IN CONCRETE

Chemical admixtures added to concrete to be used in structures or elements designed in accordance with this Standard shall comply with AS 1478.1. In addition, strongly ionized salts, such as chlorides or nitrates, shall not be added unless it is demonstrated that the resulting concentration of soluble ions does not adversely affect the durability of the concrete, or the durability of the reinforcement, tendons, ducts or cast-in inserts embedded in it.

4.10 REQUIREMENTS FOR COVER TO REINFORCING STEEL AND TENDONS

4.10.1 General

The cover to reinforcing steel and tendons shall be the greatest of the values determined from Clauses 4.10.2 and 4.10.3, as appropriate, unless exceeded by the covers required by Section 5 for fire resistance.

4.10.2 Cover for concrete placement

Designers shall specify appropriate covers to ensure that the concrete can be satisfactorily placed and compacted around the reinforcement, tendons or ducts, or any combination of these, in accordance with the requirements of Clause 19.1.3.

In the determination of an appropriate cover, consideration shall be given to the size and shape of the member; the size and configuration of the reinforcement and, if present, the tendons or ducts; and the aggregate size, the workability of the concrete and the direction of concrete placement.

Where the presence of ducts is not a consideration, covers to reinforcement or tendons greater than their nominal size or the maximum nominal aggregate size, whichever is larger, shall be deemed to satisfy the requirements of the first two paragraphs of the Clause.

4.10.3 Cover for corrosion protection

4.10.3.1 *General*

For corrosion protection, the cover shall be not less than the appropriate value given in Clauses 4.10.3.2 to 4.10.3.5.

4.10.3.2 *Standard formwork and compaction*

Where concrete is cast in formwork complying with AS 3610 and compacted in accordance with Clause 19.1.3 of this Standard, the cover shall be not less than the value given in Table 4.10.3.2 appropriate to the exposure classification and f'_c.

Accessed by SWINBURNE UNIVERSITY OF TECHNOLOGY on 15 Aug 2007

@Seismicisolation

@Seismicisolation

4.10.3.3 *Cast against ground*

Where concrete is cast on or against ground and compacted in accordance with Clause 19.1.3, the cover to a surface in contact with the ground shall be as given in Table 4.10.3.2 but increased by—

(a) 10 mm if the concrete surface is protected by a damp-proof membrane; or

(b) 20 mm otherwise.

4.10.3.4 *Rigid formwork and intense compaction*

Where concrete is precast in rigid steel forms and subjected to intense compaction, such as obtained with vibrating tables or form vibrators, the cover shall be not less than the value given in Table 4.10.3.4, appropriate to the exposure classification and f'_c.

4.10.3.5 *Structural members manufactured by spinning or rolling*

Where structural members are manufactured by spinning or rolling concrete having a water/cement ratio less than 0.35, and provided that no negative tolerance is allowed on the fixing of reinforcement, the cover for corrosion protection shall be not less than the value given in Table 4.10.3.5 for the appropriate exposure classification.

TABLE 4.10.3.2

REQUIRED COVER WHERE STANDARD FORMWORK AND COMPACTION ARE USED

Exposure classification	Required cover, mm				
	Characteristic strength (f'_c)				
	20 MPa	25 MPa	32 MPa	40 MPa	≥ 50 MPa
A1	20	20	20	20	20
A2	(50)	30	25	20	20
B1	—	(60)	40	30	25
B2	—	—	(65)	45	35
C	—	—	—	(70)	50

NOTES:

1 Bracketed figures are the appropriate covers when the concession given in Clause 4.3.2, relating to the strength grade permitted for a particular exposure classification, is applied.

2 Increased values are required if Clause 4.10.3.3 applies.

Accessed by SWINBURNE UNIVERSITY OF TECHNOLOGY on 15 Aug 2007

@Seismicisolation

@Seismicisolation

TABLE 4.10.3.4

REQUIRED COVER WHERE RIGID FORMWORK AND INTENSE COMPACTION ARE USED

Exposure classification	Required cover, mm				
	Characteristic strength (f'_c)				
	20 MPa	25 MPa	32 MPa	40 MPa	≥ 50 MPa
A1	15	15	15	15	15
A2	(35)	20	15	15	15
B1	—	(45)	30	25	20
B2	—	—	(50)	35	25
C	—	—	—	(55)	40

NOTE: Bracketed figures are the appropriate covers when the concession given in Clause 4.3.2, relating to the strength grade permitted for a particular exposure classification, is applied.

TABLE 4.10.3.5

REQUIRED COVER FOR SPUN OR ROLLED MEMBERS

Exposure classification	Cover mm
A1 & A2	10
B1	15
B2	20
C	25

Accessed by SWINBURNE UNIVERSITY OF TECHNOLOGY on 15 Aug 2007

@Seismicisolation

@Seismicisolation

SECTION 5 DESIGN FOR FIRE RESISTANCE

5.1 SCOPE OF SECTION

This Section sets out the requirements for the design of reinforced and prestressed concrete structures and members to resist the effects of fire and gives methods for determining the fire-resistance levels required by the relevant Authority.

5.2 DEFINITIONS

For the purpose of this Section, the following definitions apply:

5.2.1 Fire-resistance level

The fire-resistance periods for structural adequacy, integrity and insulation expressed in that order, as required by the relevant Authority.

5.2.2 Fire-resistance period

The time, in minutes, for a member to reach the appropriate failure criterion specified in AS 1530.4, if tested for fire in accordance with that Standard.

5.2.3 Fire-separating function

The function served by the boundary elements of a fire compartment, which are required to have a fire-resistance level, of preventing a fire in that compartment from spreading to adjoining compartments.

NOTES:

When tested in accordance with AS 1530.4, prototypes of such members are exposed to fire from only one direction at a time and are assumed to be similarly exposed for the purpose of interpreting this Section.

Roofs, walls and floors may serve this function.

5.2.4 Hollow-core slab or wall

A slab or wall having mainly a uniform thickness and containing essentially continuous voids, where the thickness of concrete between adjacent voids and the thickness of concrete between any part of a void and the nearest surface is not less than the greater of one fifth the required effective thickness of the slab or wall and 25 mm.

5.2.5 Insulation

The ability of a fire-separating member, such as a wall or floor, to limit the surface temperature on one side of the member when exposed to fire on the other side.

5.2.6 Integrity

The ability of a fire-separating member to resist the passage of flames or hot gases through the member when exposed to fire on one side.

5.2.7 Loadbearing member

A member intended to support or transmit vertical loads additional to its own weight and where the design axial force at mid-height of the member is greater than $0.03 f'_c A_g$.

5.2.8 Ribbed slab

A slab incorporating parallel ribs spaced at not greater than 1500 mm centre-to-centre in one or two directions.

5.2.9 Structural adequacy

The ability of a member to maintain its structural function when exposed to fire.

Accessed by SWINBURNE UNIVERSITY OF TECHNOLOGY on 15 Aug 2007

@Seismicisolation

@Seismicisolation

5.3 DESIGN REQUIREMENTS

5.3.1 General

A member shall be designed to have a fire-resistance period for each of structural adequacy, integrity and insulation not less than the required fire-resistance level.

5.3.2 Joints

Joints between members or between adjoining parts shall be constructed so that the fire-resistance level of the whole assembly is not less than that required for the member.

5.3.3 Spalling of beams and columns

NOTE: Standards Australia is not prepared at present to specify requirements for the prevention of spalling of concrete from beams or columns exposed to fire; however, reference may be made to BS 8110.2, in relation to this topic.

5.3.4 Methods for determining fire-resistance periods

The fire-resistance periods for a member shall be determined by either—

(a) proportioning the member in accordance with Clauses 5.4 to 5.7, 5.11 and 5.12 as appropriate; or

(b) the methods given in Clause 5.8 or Clause 5.9.

5.4 FIRE-RESISTANCE PERIODS FOR BEAMS

5.4.1 Insulation and integrity for beams

Fire-resistance periods for insulation and integrity are not generally relevant to beams but, where required, are met by satisfying the corresponding resistance periods for structural adequacy.

5.4.2 Structural adequacy for beams incorporated in roof or floor systems

A beam, whose upper surface is integral with or protected by a slab complying with Clause 5.5, which has a web of uniform width or which tapers uniformly over its depth, has one of the fire-resistance periods for structural adequacy shown in Figures 5.4.2(A) and 5.4.2(B), if it is proportioned so that—

(a) the beam width, measured at the centroid of the lowest level of longitudinal bottom reinforcement; and

(b) the cover to the longitudinal bottom reinforcement

are not less than the values for that period obtained from—

(i) Figure 5.4.2(A), for simply supported beams; or

(ii) Figure 5.4.2(B), for continuous beams.

Cover to tendons shall be increased from the relevant values for longitudinal bottom reinforcement obtained from Figure 5.4.2(A) or Figure 5.4.2(B), as appropriate, by 5 mm for periods of 30 and 60 min and by 10 mm for periods of 90 min and greater.

For the purpose of this Clause, a beam shall be considered continuous if, under imposed load, it is flexurally continuous at least at one end.

5.4.3 Structural adequacy for beams exposed to fire on all sides

A beam of approximately rectangular cross-section, which can be exposed to fire on all four sides, has a particular fire-resistance period for structural adequacy if it is proportioned so that—

(a) the total depth of the beam is not less than the least value of b_w for that period, obtained from Figure 5.4.2(A) or Figure 5.4.2(B) as appropriate;

Accessed by SWINBURNE UNIVERSITY OF TECHNOLOGY on 15 Aug 2007

@Seismicisolation

@Seismicisolation

(b) the cross-sectional area of the beam is not less than twice the area of a square with a side equal to b_w determined as for Item (a); and

(c) the cover is not less than the value for that period determined using the minimum dimension of the beam for b_w in the relevant figure and applies to all longitudinal reinforcement or tendons.

5.4.4 Increasing fire-resistance periods of beams by insulating materials

For beams, the fire-resistance periods may be increased, in accordance with Clause 5.10, by the application of insulating material to the surfaces exposed to fire.

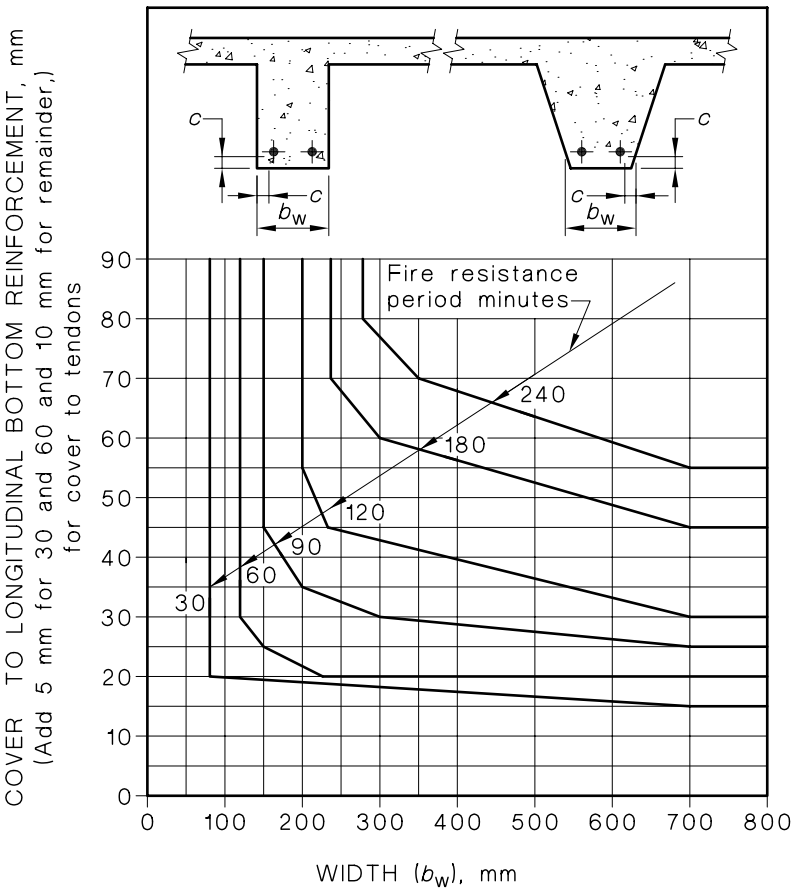

FIGURE 5.4.2(A) STRUCTURAL ADEQUACY REQUIREMENTS — SIMPLY SUPPORTED BEAMS

Accessed by SWINBURNE UNIVERSITY OF TECHNOLOGY on 15 Aug 2007

@Seismicisolation

@Seismicisolation

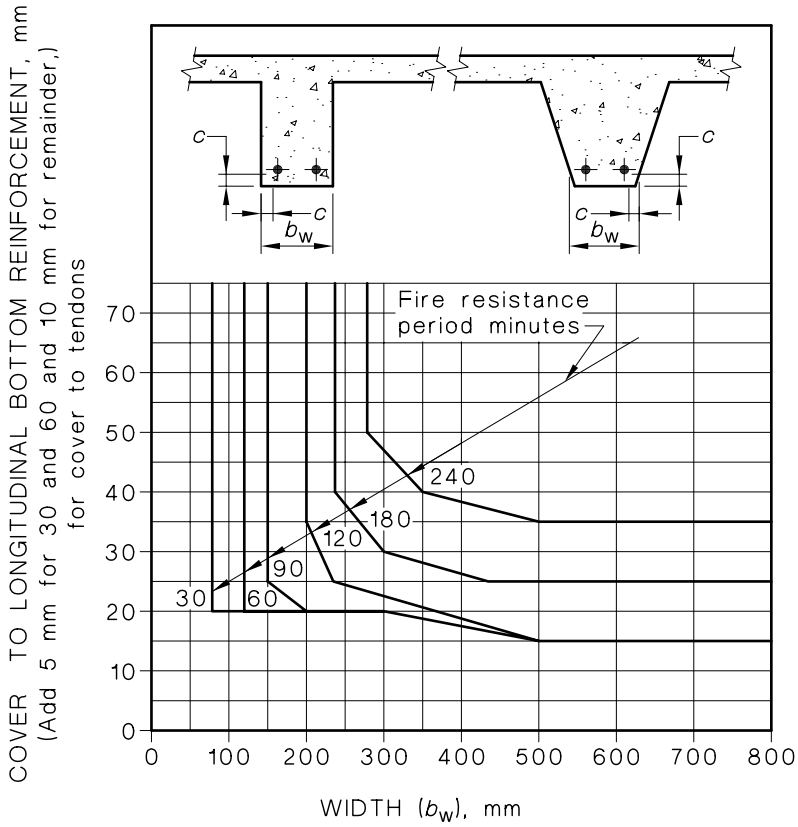

FIGURE 5.4.2(B) STRUCTURAL ADEQUACY REQUIREMENTS — CONTINUOUS BEAMS

5.5 FIRE-RESISTANCE PERIODS FOR SLABS

5.5.1 Insulation for slabs

A slab has one of the fire-resistance periods for insulation given in Table 5.5.1 if the effective thickness of the slab is not less than the corresponding value given in the table.

The effective thickness of the slab to be used in Table 5.5.1 shall be taken as follows:

(a) For solid slabs, the actual thickness.

(b) For hollow-core slabs, the net cross-sectional area divided by the width of the cross-section.

(c) For ribbed slabs, the thickness of the solid slab between the webs of adjacent ribs.

TABLE 5.5.1

MINIMUM EFFECTIVE THICKNESS FOR INSULATION

Fire-resistance minutes	Effective thickness mm
30	60
60	80
90	100
120	120
180	150
240	170

Accessed by SWINBURNE UNIVERSITY OF TECHNOLOGY on 15 Aug 2007

@Seismicisolation

@Seismicisolation

5.5.2 Integrity for slabs

A slab has a particular fire-resistance period for integrity if it meets the requirements for both insulation and structural adequacy for that period.

5.5.3 Structural adequacy for slabs

For the purpose of this Clause, a slab shall be considered continuous if, under imposed load, it is flexurally continuous at least at one end.

The fire-resistance period for structural adequacy for a slab shall be determined in accordance with either of the following, as appropriate.

(a) A solid or hollow-core slab has one of the fire-resistance periods for structural adequacy given in Table 5.5.3(A) if, for the appropriate support conditions, the cover to the bottom reinforcement and tendons is not less than the corresponding value given in the table.

(b) A ribbed slab has a particular fire-resistance period for structural adequacy if, for the appropriate support conditions and fire-resistance period, it is proportioned so that—

(i) the width of the ribs and the cover to the longitudinal bottom reinforcement in them are not less than those given in Table 5.5.3(B); and

(ii) the cover to the bottom reinforcement in the slab between the ribs is not less than that determined in accordance with Item (a) above.

A rib incorporating tendons has a fire-resistance period for structural adequacy determined in accordance with Item (i) above, if the cover to tendons is 10 mm greater than the appropriate value for reinforcement.

5.5.4 Increasing fire-resistance periods of slabs by insulating materials

For slabs, the fire-resistance periods may be increased, in accordance with Clause 5.10, by the addition of toppings and/or the application of insulating materials to the soffit.

Other methods (e.g. addition of insulating materials in hollow cores) may be used but any increase afforded shall be determined in accordance with Clause 5.8.

TABLE 5.5.3(A)

FIRE-RESISTANCE REQUIREMENTS FOR STRUCTURAL ADEQUACY OF SLABS

Fire-resistance period	Cover to bottom reinforcement or tendons mm			
	Simply supported slabs		Continuous slabs	
minutes	Reinforcement	Tendons	Reinforcement	Tendons
30	15	20	10	15
60	20	25	15	20
90	25	35	15	25
120	30	40	15	25
180	45	55	25	35
240	55	65	35	45

NOTE: For simply supported two-way slabs, the values for cover may be reduced by 5 mm.

Accessed by SWINBURNE UNIVERSITY OF TECHNOLOGY on 15 Aug 2007

@Seismicisolation

@Seismicisolation

TABLE 5.5.3(B)

FIRE-RESISTANCE REQUIREMENTS FOR STRUCTURAL ADEQUACY OF RIBS

Fire-resistance period minutes	Simply supported one-way and two-way ribbed slabs		Continuous one-way and two-way ribbed slabs	
	Minimum width of rib mm	Cover mm	Minimum width of rib mm	Cover mm
30	80	15	70	15
60	110	25	75	20
90	135	35	110	25
120	150	45	125	35
180	175	55	150	45
240	200	65	175	55

NOTE: Cover is measured to the longitudinal bottom reinforcement.

5.6 FIRE-RESISTANCE PERIODS FOR COLUMNS

5.6.1 General

Fire-resistance periods for a column shall be determined in accordance with either —

(a) Clauses 5.6.2 and 5.6.3 if the column —

(i) can be exposed to fire on all sides; or

(ii) is built into or forms part of a wall not capable of serving a fire-separating function; or

(iii) is built into or forms part of a wall having a fire-separating function but which has a fire-resistance period for structural adequacy less than that required for the column; or

(iv) is built into and protrudes by more than the cover to the longitudinal steel beyond the fire-exposed face of a wall having a fire-separating function; or

(b) Clause 5.7 in all other instances.

5.6.2 Insulation and integrity for columns

Fire-resistance periods for insulation and integrity do not apply to columns described in Clause 5.6.1(a). Where a column serves a fire-separating function and Clause 5.6.1(a) is not applicable, the fire resistance periods for insulation and integrity shall be determined in accordance with Clauses 5.7.2 and 5.7.3.

5.6.3 Structural adequacy for columns

5.6.3.1 *General*

The structural adequacy of a column shall be determined either by Clause 5.6.3.2 or the deemed-to-satisfy rules given in Clause 5.6.3.3.

5.6.3.2 *Structural adequacy by calculation*

The fire resistance period (FRP), in minutes, for structural adequacy of a reinforced concrete column, of an aspect ratio within the range 1:1 to 1:8, minimum dimension within the range 150 mm to 1000 mm, cover to main reinforcement in the range 20 mm to 40 mm, constructed of concrete with f'_c in the range 20 MPa to 50 MPa and with L_e not less than 5 D_c shall be determined from the following expression:

$$\text{FRP} = \left(k\, f_c'^{\,1.3} D_c^{\,3.3} D_g^{\,1.8}\right) / \left(10^5 N^{*1.5} L_e^{\,0.9}\right)$$

Accessed by SWINBURNE UNIVERSITY OF TECHNOLOGY on 15 Aug 2007

@Seismicisolation

@Seismicisolation

where

k = a coefficient dependent on the steel ratio

= 1.5 when $A_s/A_g < 0.025$; or

= 1.7 when $A_s/A_g \geq 0.025$

f'_c = the characteristic compressive strength of concrete, in megapascals

D_c = the smaller column dimension of a rectangular column, in millimetres

D_g = the greater column dimension of a rectangular column, in millimetres

N^* = the design axial force for the fire limit state, in kilonewtons, but not less than $0.4\ N_{uo}$

L_e = the effective length of the column, in millimetres

For columns with cross-section dimensions greater than 1000 mm, the FRP shall be calculated assuming D_c and D_g have maximum values of 1000 mm.

For columns with L_e less than 5 D_c, the FRP shall be calculated assuming $L_e = 5\ D_c$.

For columns of circular or regular polygonal cross-section, D_c and D_g in the above equation shall be taken as equal to $\sqrt{A_g}$. For prestressed columns, the above equation may be used, provided the cover to tendons is not less than 45 mm or the cover required for durability, whichever is the larger.

5.6.3.3 *Structural adequacy by proportioning*

A column shall be deemed to have one of the fire-resistance periods for structural adequacy shown in Figure 5.6.3, if it is proportioned so that the minimum cross-sectional dimension and the cover to the longitudinal reinforcement are not less than the values obtained from that Figure.

For any particular fire-resistance period, the cover to tendons shall be 10 mm greater than the relevant values for longitudinal reinforcement obtained from Figure 5.6.3.

For columns of circular cross-section, or regular polygonal cross-section with more than four faces, the dimension '*b*' in Figure 5.6.3 shall be taken as the diameter of circular columns, or the diameter of the circumscribed circle passing through the external corners of polygonal columns.

5.6.4 Increasing fire-resistance periods for columns by insulating materials

For columns, the fire-resistance periods may be increased, in accordance with Clause 5.10, by the application of insulating material to the faces exposed to fire.

5.7 FIRE-RESISTANCE PERIODS FOR WALLS

5.7.1 General

The fire-resistance periods for a wall shall be determined in accordance with either —

(a) Clauses 5.7.2 to 5.7.4 if the wall has a fire-separating function; or

(b) Clause 5.6 in all other instances.

Accessed by SWINBURNE UNIVERSITY OF TECHNOLOGY on 15 Aug 2007

@Seismicisolation

@Seismicisolation

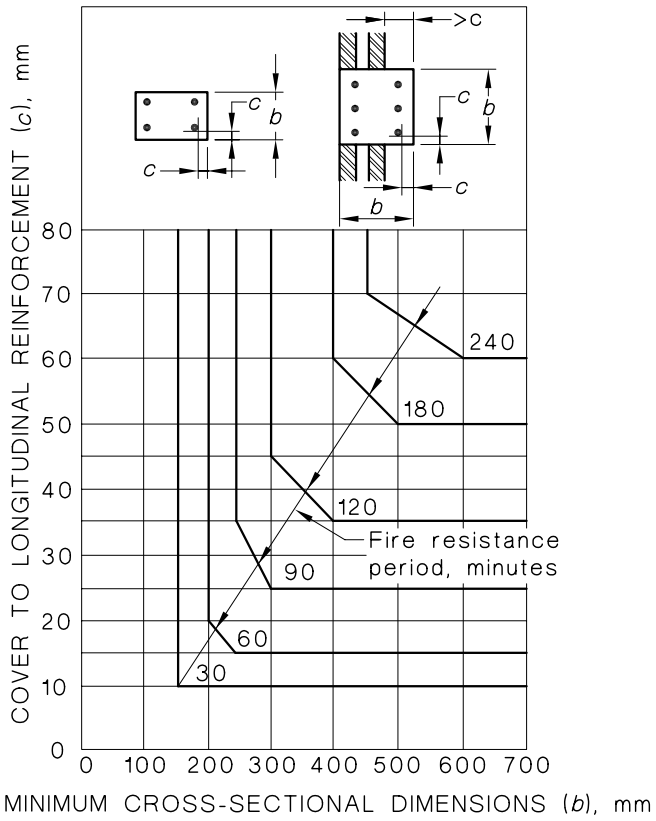

FIGURE 5.6.3 STRUCTURAL ADEQUACY REQUIREMENT—COLUMNS

5.7.2 Insulation for walls

A wall has one of the fire-resistance periods for insulation given in Table 5.7.2 if the effective thickness of the wall is not less than the corresponding value given in the table.

The effective thickness of the wall to be used in Table 5.7.2 shall be taken as follows:

(a) For solid walls, the actual thickness.

(b) For hollow-core walls the net cross-sectional area divided by the length of the cross-section.

TABLE 5.7.2

MINIMUM EFFECTIVE THICKNESS FOR INSULATION

Fire-resistance period minutes	Effective thickness mm
30	60
60	80
90	100
120	120
180	150
240	170

5.7.3 Integrity for walls

A wall has the stated fire-resistance period for integrity if it meets the requirements for both insulation and structural adequacy for that period.

Accessed by SWINBURNE UNIVERSITY OF TECHNOLOGY on 15 Aug 2007

@Seismicisolation

@Seismicisolation

5.7.4 Structural adequacy for walls

A laterally supported wall has the required fire-resistance period for structural adequacy if the following are satisfied:

(a) The wall complies with the requirements of Clause 11.2.

(b) Its effective thickness is not less than the thickness required by Clause 5.7.2 for that period.

(c) If $N^* \leq 0.03 f_c' A_g$ and H_{we}/t_w is not greater than 50.

(d) If $N^* > 0.03 f_c' A_g$—

(i) H_{we}/t_w is not greater than 20; and

(ii) the cover from the fire-exposed face to the vertical reinforcement or tendons is not less than the corresponding cover given in Table 5.7.4 for that period.

For the purpose of Items (c) and (d) above, the following apply:

(A) N^* is the design axial force at the mid-height of the wall.

(B) H_{we} is calculated in accordance with the principles of Section 10, or from Clause 11.4.3, with rotational restraint at the support, if any, being provided by a member outside the fire compartment including a continuation of the wall itself.If the wall spans horizontally, H_{wu} shall be taken as equal to L_l.

(C) If the wall is laterally supported on all four sides, H_{we} shall be determined—

(1) in accordance with Item (B) if $H_{wu} \leq L_l$; or

(2) by substituting L_l for H_{wu} in Item (B) if $H_{wu} > L_l$, the rotational restraint provided being determined for the supports in the direction of L_l.

TABLE 5.7.4

MINIMUM COVER TO VERTICAL REINFORCEMENT AND TENDONS FOR STRUCTURAL ADEQUACY OF WALLS

Fire-resistance period	Cover mm	
minutes	To reinforcement	To tendons
30	20	30
60	20	30
90	35	30
120	40	30
180	45	35
240	50	45

5.7.5 Increasing fire-resistance periods for walls by insulating materials

For walls, the fire-resistance periods may be increased, in accordance with Clause 5.10, by the application of insulating materials to the face exposed to fire.

Other methods (e.g. addition of insulation materials in hollow cores) may be used. Any increase afforded shall be determined in accordance with Clause 5.8.

Accessed by SWINBURNE UNIVERSITY OF TECHNOLOGY on 15 Aug 2007

@Seismicisolation

@Seismicisolation

5.8 FIRE-RESISTANCE PERIODS FROM FIRE TESTS

5.8.1 General

Fire tests on members shall be carried out in accordance with AS 1530.4, and the results applied in accordance with this Clause, as appropriate.

5.8.2 Loadbearing members tested under load

5.8.2.1 *Application of test results*

For prototype loadbearing members tested under load, in accordance with AS 1530.4, the fire test results shall be applied in accordance with either Clause 5.8.2.2 or 5.8.2.3, as appropriate.

5.8.2.2 *Members identical to the prototype*

The results of fire tests on a prototype may be applied directly to an identical member or system incorporated in a building structure.

For the purpose of this Clause, an incorporated member or system shall be considered identical to the prototype if —

(a) it is of the same shape, size and form of construction as the prototype;

(b) it is composed of materials having relevant properties within the variability range of those used in the prototype;

(c) it has the same type and similar degree of flexural restraint and restraint against thermal movements, as the prototype;

(d) it has thicknesses and covers, in relation to the expected direction of fire exposure, not less than the corresponding thicknesses and covers of the prototype; and

(e) it has an effective span, or effective length, which does not exceed that of the prototype by more than 3%.

5.8.2.3 *Floor or roof members, or systems, similar to the prototype*

The results of fire tests on a prototype floor or roof member, or system, may be applied to similar members or systems incorporated in a building structure if the test results are suitably modified by appropriate engineering calculations.

The engineering calculations shall take into account variations of the incorporated member or system from that of the prototype including, but not limited to, differences in the effective span; differences in magnitude, or distribution of loading, or both; and differences in the degree of restraint against flexural or thermal movements, or both.

Where the flexural restraint available at either or both ends of a span of the incorporated member or system exceeds the corresponding flexural restraint provided or induced in the prototype during the test, the design positive moment in that span may be reduced by not more than 10% of the excess for each end that the restraint is available.

For the purpose of this Clause, an incorporated member or system shall be considered similar to the prototype member or system provided that —

(a) the incorporated member or system —

  (i) is similar in geometry to the prototype;

  (ii) is of the same form of construction and is composed of materials similar to those used in the prototype; and

  (iii) has the same type of restraints against flexural, or thermal movements, or both, as provided or induced in the prototype; and

Accessed by SWINBURNE UNIVERSITY OF TECHNOLOGY on 15 Aug 2007

@Seismicisolation

@Seismicisolation

(b) the calculated stresses in the incorporated member or system, due to the short-term serviceability loads specified in Clause 3.4, do not exceed by more than 20% the calculated stresses in the corresponding sections of the prototype, due to the loads on it at the commencement of heating.

5.8.3 Beams, slabs and columns tested as non-loaded members

Temperatures measured within the cross-section of beams, slabs and columns, tested as non-loaded members in accordance with AS 1530.4, shall be used, in conjunction with a method of calculation given in Clause 5.9, to determine the structural adequacy of the constructed member.

5.9 PREDICTION OF FIRE-RESISTANCE PERIODS

The fire-resistance period of a concrete member may be predicted by methods of calculation provided the methods comply with Specification A2.3 of the Building Code of Australia, using the relevant properties of materials at elevated temperatures as appropriate. The information given in Figures 5.9(A) and 5.9(B) is only valid for reinforcement with yield strengths up to 450 MPa.

Similar information for 500 MPa steels shall be determined by tests, as necessary.

NOTE: Particular consideration should be given to the effects of moment redistribution in a fire situation when Ductility Class L reinforcement is used in critical regions.

5.10 INCREASE OF FIRE-RESISTANCE PERIODS BY USE OF INSULATING MATERIALS

5.10.1 Increase of fire-resistance periods by the addition of insulating materials

5.10.1.1 *General*

The fire-resistance periods for insulation and structural adequacy of a concrete member may be increased, by the addition to the surface of an insulating material, to provide increased thickness to the member, or greater insulation to the longitudinal reinforcement or tendons, or both.

5.10.1.2 *Acceptable forms of insulation*

Acceptable forms of insulation include the following:

(a) Slabs of 1:4 vermiculite concrete or of 1:4 perlite concrete, which are appropriately bonded to the concrete.

(b) Gypsum-vermiculite plaster or gypsum-perlite plaster, both mixed in the proportion of 0.16 m^3 of aggregate to 100 kg of gypsum, in the form of either slabs appropriately bonded to the concrete, or as a sprayed or trowelled application applied in situ.

(c) Any other fire-protective building board or material, which has been demonstrated to be suitable for the purpose in a standard fire-resistance test.

Accessed by SWINBURNE UNIVERSITY OF TECHNOLOGY on 15 Aug 2007

@Seismicisolation

@Seismicisolation

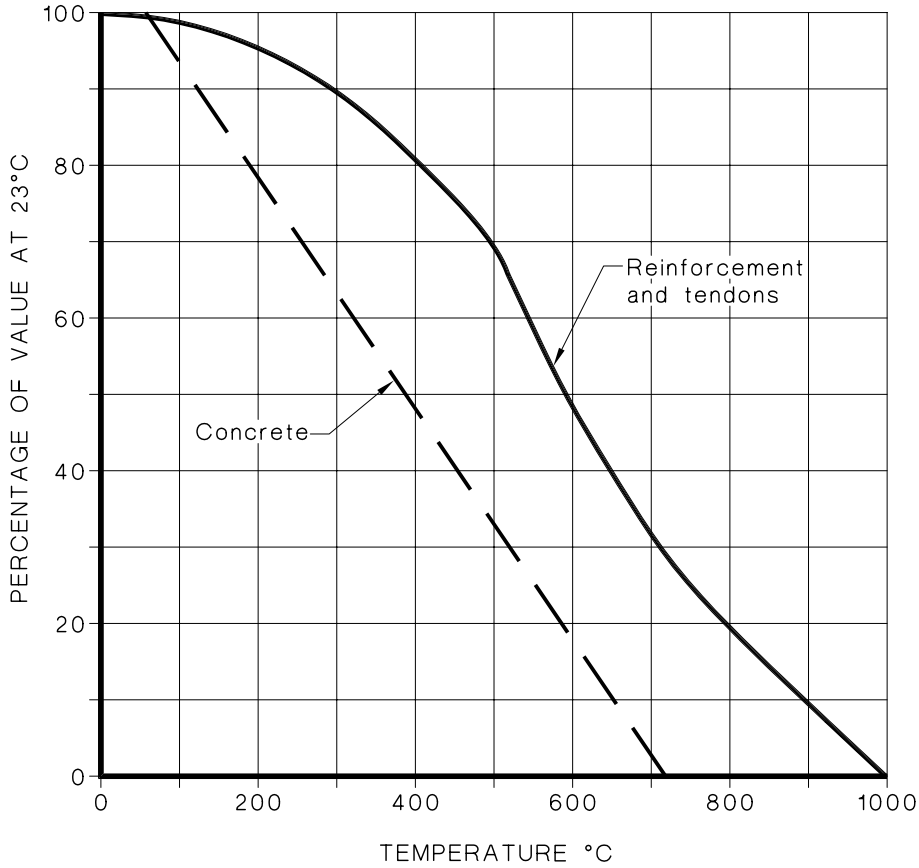

FIGURE 5.9(A) DECREASE OF ELASTIC MODULUS WITH TEMPERATURE

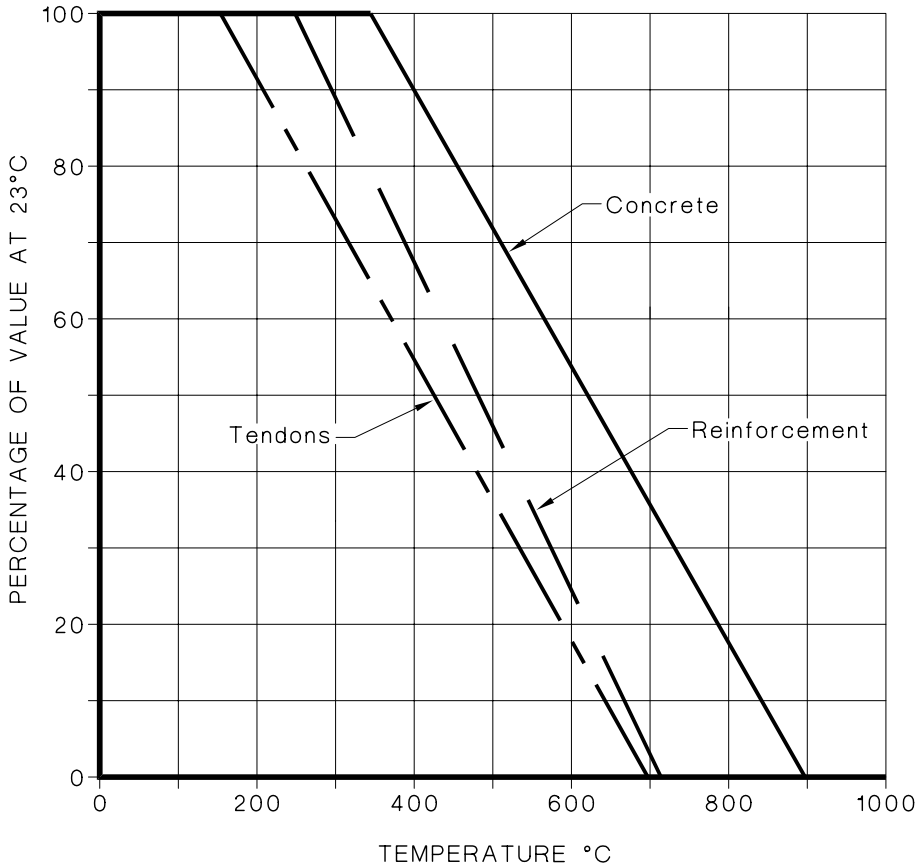

FIGURE 5.9(B) DECREASE OF STRENGTH WITH TEMPERATURE

@Seismicisolation

Accessed by SWINBURNE UNIVERSITY OF TECHNOLOGY on 15 Aug 2007

@Seismicisolation

5.10.1.3 *Thickness of insulating material*

The minimum thickness of insulating material added to attain the required fire-resistance level shall be determined by testing in accordance with AS 1530.4.

In the absence of such testing and only for the materials specified in Clause 5.10.1.2, the minimum thickness of insulating material to be added may be taken as the difference between the required cover or effective thickness specified in this Section and the actual cover or effective thickness, whichever governs, multiplied by —

(a) 0.75, for materials specified in Clauses 5.10.1.2 (a) and (b); or

(b) an appropriate factor for materials specified in Clause 5.10.1.2(c), where the factor is derived from tests in which the difference calculated above lies within the range of insulation thickness tested;

(c) and the thickness thus calculated rounded to the nearest 5 mm above.

5.10.1.4 *Reinforcement in sprayed or trowelled insulating materials*

Where the thickness of sprayed or trowelled insulating materials exceeds 10 mm, it shall be reinforced to prevent detachment during exposure to fire.

5.10.2 Increase of insulation period of slabs by application of toppings

The fire-resistance period for insulation of a slab may be increased by incorporating an integral or a separately applied topping of thickness given by the following equation:

$$t_{\text{nom}} = kt_d + 10$$

where

t_{nom} = nominal thickness of topping to be applied

k = 1.0 for a topping of plain concrete

= 0.8 for a topping of concrete made from lightweight aggregate complying with AS 2758.1

= 0.6 for a topping of gypsum (including jointed gypsum block) having a wearing overlay

t_{d} = the difference between the actual effective thickness of the slab and the effective thickness specified in Table 5.5.1, for the required fire- resistance period

5.11 RECESSES FOR SERVICES IN WALLS

The effect of recesses for services, on the fire-resistance periods for structural adequacy, integrity and insulation of a wall, shall be ignored if the thickness of wall remaining under the bottom of the recess is not less than half the wall thickness and the total recessed area, within any 5 m^2 of wall face, is not more than 10 000 mm^2 on one or both faces of the wall.

If the above limits are exceeded, the wall thickness (t) used to determine fire-resistance periods shall be taken as the overall thickness less the depth of the deepest recess.

5.12 CHASES

5.12.1 General

In concrete members subject to fire, chases shall be kept to a minimum. The effect of chases on the fire-resistance periods of walls shall be taken into account in accordance with the provisions of Clauses 5.12.2 and 5.12.3. The effects of chases in other members shall be taken into account using rational methods of analysis.

Accessed by SWINBURNE UNIVERSITY OF TECHNOLOGY on 15 Aug 2007

@Seismicisolation

@Seismicisolation

5.12.2 Effect of chases on structural adequacy of walls

The effect of chases, on the fire-resistance period for structural adequacy of walls, shall be taken into account as follows:

(a) For walls spanning one way, where —

(i) the chase direction is parallel to the span direction —ignored;

(ii) the chase direction is perpendicular to the span direction and of length not greater than four times the wall thickness or 0.4 times the overall length of the wall, whichever is greater —ignored; or

(iii) the chase is perpendicular to the span direction and of length greater than four times the wall thickness or 0.4 times the overall length of the wall—accounted for by using a slenderness ratio for the wall based on the reduced wall thickness.

(b) For walls spanning two ways (panel action), where —

(i) there is either a vertical chase with a length not greater than half the wall height (H), or a horizontal chase with a length not greater than half the wall length (L)—ignored;

(ii) the length of a vertical chase is greater than half the wall height (H), or the length of a horizontal chase is greater than half the wall length (L)—accounted for by using a slenderness ratio for the wall based on the reduced wall thickness, or the chase may be regarded as an unsupported edge and the panel designed as two sub-panels.

5.12.3 Effect of chases on integrity and insulation of walls

The effect of chases, on the fire-resistance periods for integrity and insulation of walls, shall be taken into account as follows:

(a) Where —

(i) the depth of the chase is not greater than 30 mm;

(ii) the cross-sectional area of the chase, on a plane perpendicular to the plane of the wall face and at right angles to the centre-line of the chase, is not greater than 1000 mm^2; and

(iii) the total face area of chases within any 5 m^2 of wall face is not greater than 100 000 mm^2 on one or both wall faces,

the effect shall be ignored.

(b) For cases other than those in Item (a) above, the effects shall be taken into account in accordance with the normal rules for insulation and integrity of walls, except that slenderness ratios shall be based on the reduced wall thickness.

Accessed by SWINBURNE UNIVERSITY OF TECHNOLOGY on 15 Aug 2007

@Seismicisolation

@Seismicisolation

SECTION 6 DESIGN PROPERTIES OF MATERIALS

6.1 PROPERTIES OF CONCRETE

6.1.1 Strength

6.1.1.1 *Characteristic compressive strength*

The characteristic compressive strength of concrete at 28 days (f'_c) may be either—

(a) taken as equal to the specified strength grade, provided that the appropriate curing is ensured and that the concrete complies with AS 1379; or

(b) determined statistically from compressive strength tests carried out in accordance with AS 1012.9.

The characteristic compressive strengths of the standard strength grades are 20 MPa, 25 MPa, 32 MPa, 40 MPa, 50 MPa, and 65 MPa.

6.1.1.2 *Characteristic flexural tensile strength*

The characteristic flexural tensile strength of concrete (f'_{cf}) may be either—

(a) taken as equal to $0.6\sqrt{f'_c}$ at 28 days and standard curing; or

(b) determined statistically from flexural strength tests carried out in accordance with AS 1012.11.

6.1.1.3 *Characteristic principal tensile strength*

The characteristic principal tensile strength of concrete (f'_{ct}) may be either—

(a) taken as equal to $0.4\sqrt{f'_c}$ at 28 days and standard curing; or

(b) determined statistically from indirect tensile strength tests carried out in accordance with AS 1012.10.

6.1.2 Modulus of elasticity

The modulus of elasticity of concrete at the appropriate age (E_{cj}) may be either—

(a) taken as equal to $(\rho)^{1.5} \times (0.043\sqrt{f_{cm}})$, in megapascals, consideration being given to the fact that this value has a range of ±20%; or

(b) determined by test in accordance with AS 1012.17.

6.1.3 Density

The density of concrete (ρ) may be either—

(a) for normal-weight concrete, taken as not less than 2400 kg/m^3; or

(b) determined by test in accordance with either AS 1012.12.1 or AS 1012.12.2.

6.1.4 Stress-strain curves

A stress-strain curve for concrete may be either—

(a) assumed to be of curvilinear form defined by recognized simplified equations; or

(b) determined from suitable test data.

For design purposes, the shape of the curve shall be modified so that the maximum stress is $0.85\,f'_c$.

Accessed by SWINBURNE UNIVERSITY OF TECHNOLOGY on 15 Aug 2007

@Seismicisolation

@Seismicisolation

6.1.5 Poisson's ratio

Poisson's ratio for concrete, v, may be either —

(a) taken as equal to 0.2; or

(b) determined by test in accordance with AS 1012.17.

6.1.6 Coefficient of thermal expansion

The coefficient of thermal expansion of concrete may be either —

(a) taken as equal to 10×10^{-6}/°C, consideration being given to the fact that this value has a range of ±20%; or

(b) determined from suitable test data.

6.1.7 Shrinkage

6.1.7.1 *Basic shrinkage strain*

The basic shrinkage strain of concrete ($\varepsilon_{cs.b}$), may be:

(a) Normal-class concrete —

(i) determined from measurements on similar local concrete; or

(ii) taken as equal to 850×10^{-6}.

(b) Special-class concrete —

(i) determined from measurements on similar local concrete; or

(ii) determined by tests after eight weeks drying, in accordance with AS 1012.13.

6.1.7.2 *Design shrinkage strain*

The design shrinkage strain (ε_{cs}) shall be determined from the basic shrinkage strain ($\varepsilon_{cs.b}$) by any accepted mathematical model for shrinkage behaviour, calibrated such that $\varepsilon_{cs.b}$ is also predicted by the chosen model.

In the absence of more accurate methods, the design shrinkage strain at any time after commencement of drying shrinkage may be taken as —

$$k_1 \, \varepsilon_{cs.b}$$

where

k_1 is obtained from Figure 6.1.7.2

Based on a value of $\varepsilon_{cs.b}$ of 850×10^{-6}, this method gives the typical design shrinkage strains given in Table 6.1.7.2.

Consideration shall be given to the fact that ε_{cs} has a range of ±40%.

Accessed by SWINBURNE UNIVERSITY OF TECHNOLOGY on 15 Aug 2007

@Seismicisolation

@Seismicisolation

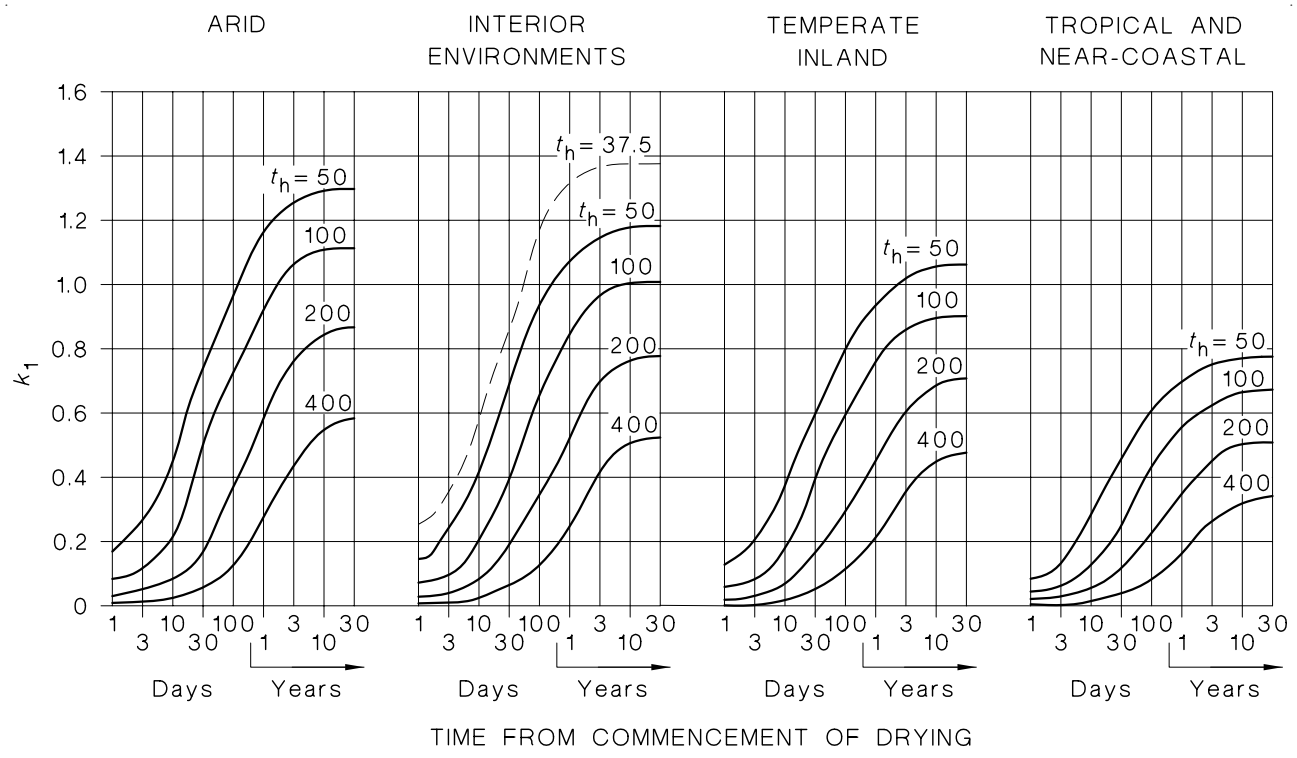

FIGURE 6.1.7.2 SHRINKAGE STRAIN COEFFICIENT (k_1) FOR VARIOUS ENVIRONMENTS

TABLE 6.1.7.2

TYPICAL DESIGN SHRINKAGE STRAINS AFTER 30 YEARS IN VARIOUS ENVIRONMENTS (FOR NORMAL-CLASS CONCRETE)

Exposure environment	Final design shrinkage strain (ε_{cs}), 10^{-6}			
	Hypothetical thickness (t_h), mm			
	50	100	200	400
Arid	1 100	940	730	500
Interior environments	1 000	860	670	450
Temperate inland	900	760	590	410
Tropical and near-coastal	650	570	440	300

NOTE: For descriptions of exposure environments see Table 4.3 and Figure 4.3.

6.1.8 Creep

6.1.8.1 *Basic creep factor*

The basic creep factor of concrete ($\phi_{cc.b}$) is the ratio of ultimate creep strain to elastic strain for a specimen loaded at 28 days under a constant stress of $0.4f'_c$ and may be —

(a) taken as the values given in Table 6.1.8.1; or

(b) determined from measurements on similar local concrete; or

(c) determined by tests in accordance with AS 1012.16.

Accessed by SWINBURNE UNIVERSITY OF TECHNOLOGY on 15 Aug 2007

@Seismicisolation

@Seismicisolation

TABLE 6.1.8.1

BASIC CREEP FACTOR

Characteristic strength (f'_c), MPa	**20**	**25**	**32**	**40**	**≥ 50**
Creep factor $\phi_{cc.b}$	5.2	4.2	3.4	2.5	2.0

6.1.8.2 *Design creep factor*

The design creep factor (ϕ_{cc}) for concrete shall be determined from the basic creep factor ($\phi_{cc.b}$) by any accepted mathematical model for creep behaviour, calibrated such that $\phi_{cc.b}$ is also predicted by the chosen model.

In the absence of more accurate methods, ϕ_{cc} at any time may be taken as —

$$k_2\ k_3\ \phi_{cc.b}$$

where k_2 and k_3 are obtained from Figure 6.1.8.2(A) and Figure 6.1.8.2(B) respectively.

Consideration shall be given to the fact that ϕ_{cc} has a range of approximately ±30%. This range is likely to be exceeded if —

(a) the cement used in the concrete has a sulphate content, expressed as SO_3 by mass of cement in accordance with AS 2350.2, outside the range 2% to 3.5%; or

(b) the concrete member is subjected to prolonged periods of temperature in excess of 25°C; or

(c) the member is subject to sustained stress levels in excess of 0.5 f'_c.

Based on a value of 2.5 for $\phi_{cc.b}$, this method gives the typical design creep factors given in Table 6.1.8.2.

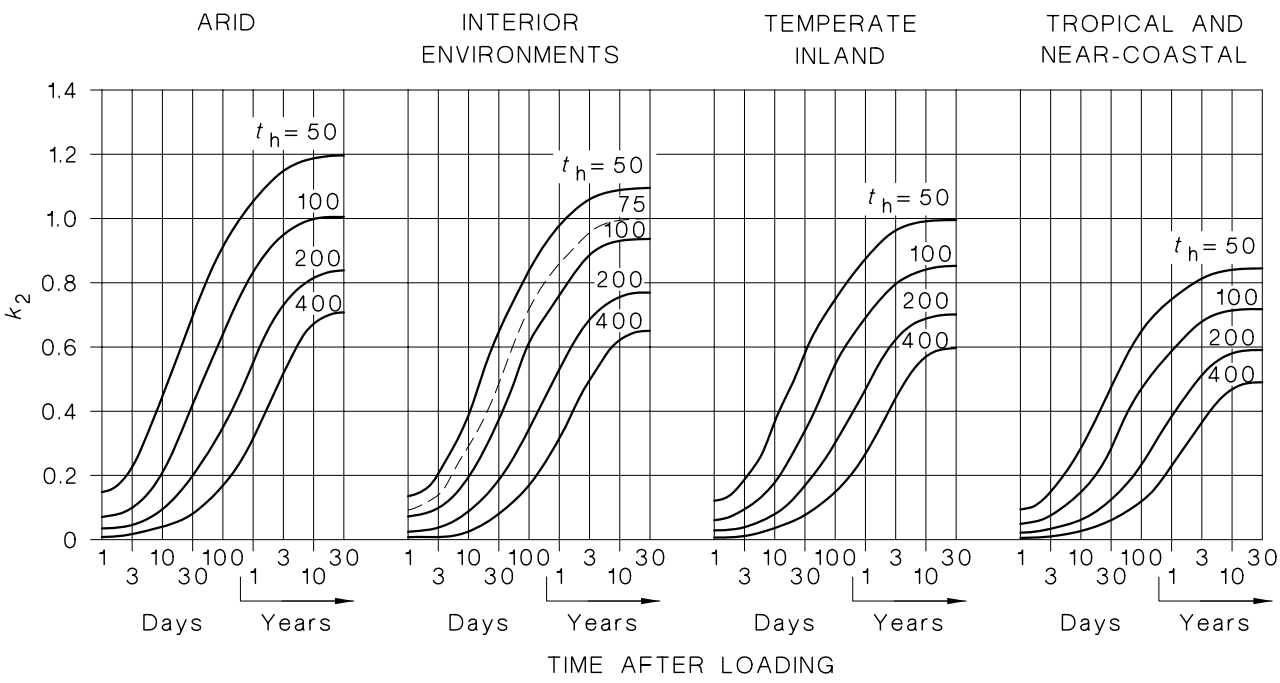

FIGURE 6.1.8.2 (A) CREEP FACTOR COEFFICIENT (k_2) FOR VARIOUS ENVIRONMENTS

Accessed by SWINBURNE UNIVERSITY OF TECHNOLOGY on 15 Aug 2007

@Seismicisolation

@Seismicisolation

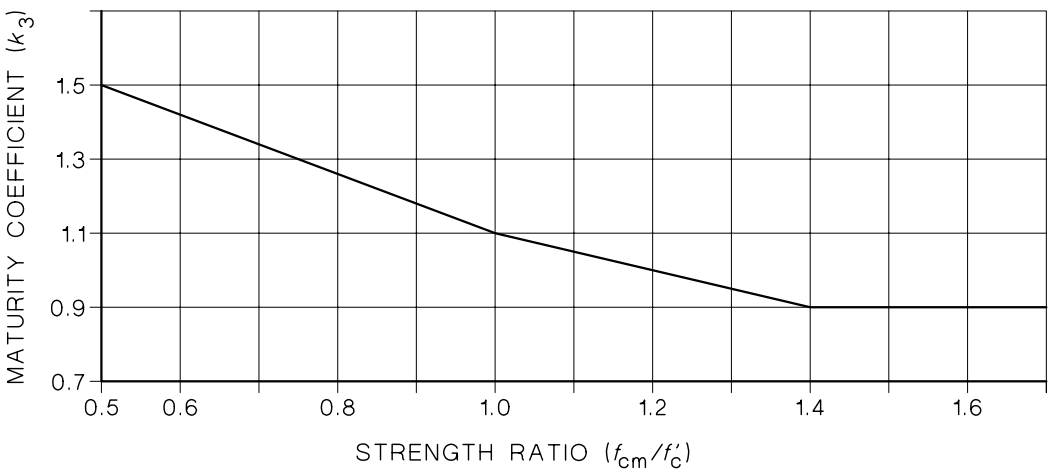

FIGURE 6.1.8.2(B) MATURITY COEFFICIENT (k_3)

TABLE 6.1.8.2

TYPICAL DESIGN CREEP FACTOR AFTER 30 YEARS IN VARIOUS ENVIRONMENTS FOR $\phi_{cc.b}$ = 2.5

Exposure environment	Concrete age at loading	Design creep factor (ϕ_{cc})			
		Hypothetical thickness (t_h), mm			
	days	50	100	200	400
Arid	0 to 7	3.9	3.3	2.7	2.3
	8 to 28	3.0	2.5	2.1	1.8
	> 28	2.7	2.3	1.9	1.6
Interior environment	0 to 7	3.5	3.1	2.5	2.1
	8 to 28	2.7	2.3	1.9	1.6
	> 28	2.5	2.1	1.7	1.5
Temperate inland	0 to 7	3.2	2.8	2.3	1.9
	8 to 28	2.5	2.1	1.8	1.5
	> 28	2.2	1.9	1.6	1.3
Tropical and near-coastal	0 to 7	2.7	2.3	1.9	1.6
	8 to 28	2.1	1.8	1.5	1.3
	> 28	1.9	1.6	1.4	1.1

NOTE: For descriptions of exposure environments, see Table 4.3, and Figure 4.3.

6.2 PROPERTIES OF REINFORCEMENT

6.2.1 Strength and ductility

The yield strength of reinforcement (f_{sy}) shall be taken as not greater than the value specified in Table 6.2.1 for the appropriate type of reinforcement (see also Clause 19.2.1.1).

The ductility of the reinforcement shall be characterized by its uniform strain (ε_{su}) and tensile-to-yield stress ratio and designated as low (L) or normal (N) as given in Table 6.2.1. Values of these parameters for each ductility class shall comply with AS/NZS 4671.

Reinforcement types complying with AS 1302 may be considered to be Class N without any additional testing requirements. Testing is required for reinforcement types complying with AS 1303 and AS 1304 to demonstrate that they satisfy the requirements for Class L steels specified in AS/NZS 4671.

Accessed by SWINBURNE UNIVERSITY OF TECHNOLOGY on 15 Aug 2007

@Seismicisolation

@Seismicisolation

TABLE 6.2.1

STRENGTH AND DUCTILITY OF REINFORCEMENT

Reinforcement		Yield strength (f_{sy}) MPa	Ductility Class
Type	**Designation grade**		
Bar— Plain to AS 1302	250R (fitments only)	250	N
Deformed to AS 1302	250S	250	N
Deformed to AS 1302	400Y	400	N
Wire, plain or deformed to AS 1303	450W (fitments only)	450	L
Welded wire mesh, plain or deformed to AS 1304	450F	450	L
Bar deformed to AS/NZS 4671	D500L (fitments only) D500N	500 500	L N
Welded wire mesh, plain, deformed and indented to AS/NZS 4671	D500L	500	L
	D500N	500	N

NOTE: Reference should be made to AS/NZS 4671 for explanation to designations applying to 500 MPa steels.

6.2.2 Modulus of elasticity

The modulus of elasticity of reinforcement (E_s) for all stress values not greater than the yield strength (f_{sy}) may be either—

(a) taken as equal to 200×10^3 MPa; or

(b) determined by test.

6.2.3 Stress-strain curves

A stress-strain curve for reinforcement may be either—

(a) assumed to be of a form defined by recognized simplified equations; or

(b) determined from suitable test data.

6.2.4 Coefficient of thermal expansion

The coefficient of thermal expansion of reinforcement may be either—

(a) taken as equal to 12×10^{-6}/°C; or

(b) determined from suitable test data.

6.3 PROPERTIES OF TENDONS

6.3.1 Strength

(a) The tensile strength of tendons (f_p) shall be taken as the minimum tensile strength specified in Table 6.3.1.

(b) The yield strength of tendons (f_{py}) may either be taken as—

(i) for wire used in the as-drawn condition ..... $0.75f_p$;

(ii) for stress-relieved wire ..... $0.85f_p$;

(iii) for all grades of strand and bar tendons ..... $0.85f_p$:or

(iv) determined by test.

Accessed by SWINBURNE UNIVERSITY OF TECHNOLOGY on 15 Aug 2007

@Seismicisolation

@Seismicisolation

TABLE 6.3.1

TENSILE STRENGTH OF COMMONLY USED WIRE STRAND AND BAR

Material type and Standard	Nominal diameter mm	Area mm^2	Minimum breaking load kN	Minimum tensile strength (f_p) MPa
Wire, AS 1310	5 5 7	19.6 19.6 38.5	30.4 33.3 65.5	1 550 1 700 1 700
7-wire super strand, AS 1311	9.3 12.7 15.2	54.7 100 143	102 184 250	1 860 1 840 1 750
7-wire regular strand, AS 1311	12.7	94.3	165	1 750
Bars, AS 1313 (Super grade only)	23 29 32 38	415 660 804 1 140	450 710 870 1 230	1 080 1 080 1 080 1 080

6.3.2 Modulus of elasticity

The modulus of elasticity of tendons (E_p) may be either—

(a) taken as equal to—

(i) for stress-relieved wire to AS 1310 .....200×10^3 MPa;

(ii) for stress-relieved steel strand to AS 1311 .....195×10^3 MPa;

(iii) for cold worked high tensile alloy steel bars to AS 1313 ..... 170×10^3 MPa; or

(b) determined by test.

Consideration should be given to the fact that the modulus of elasticity of tendons may vary by ±5% and will vary more when a number of tendons are combined into a single cable.

6.3.3 Stress-strain curves

A stress-strain curve for tendons may be determined from appropriate test data.

6.3.4 Relaxation of tendons

6.3.4.1 *General*

This Clause applies to the relaxation, at any age and stress level, of low-relaxation wire, low-relaxation strand, and alloy-steel bars.

6.3.4.2 *Basic relaxation*

The basic relaxation (R_b) of a tendon after one thousand hours at 20°C and $0.7f_p$ may be either—

(a) taken as equal to, for Australian manufactured materials—

(i) low-relaxation wire 1%;

(ii) low–relaxation strand 2%;

(iii) alloy-steel bars ..... 3%; or

(b) determined in accordance with AS 1310, AS 1311, or AS 1313 as appropriate.

Accessed by SWINBURNE UNIVERSITY OF TECHNOLOGY on 15 Aug 2007

@Seismicisolation

@Seismicisolation

6.3.4.3 *Design relaxation*

The design relaxation of a tendon (*R*) shall be determined from —

$$R = k_4 k_5 k_6 R_b$$

where

k_4 = a coefficient dependent on the duration of the prestressing force

= $\log [5.4(j)^{1/6}]$

j = the time after prestressing, in days

k_5 = a coefficient, dependent on the stress in the tendon as a proportion of f_p, determined from Figure 6.3.4.3

k_6 = a function, dependent on the average annual temperature (*T*) in degrees Celsius, taken as *T*/20 but not less than 1.0

When determining the design relaxation, consideration shall be given to the effects of curing at elevated temperatures, if applicable.

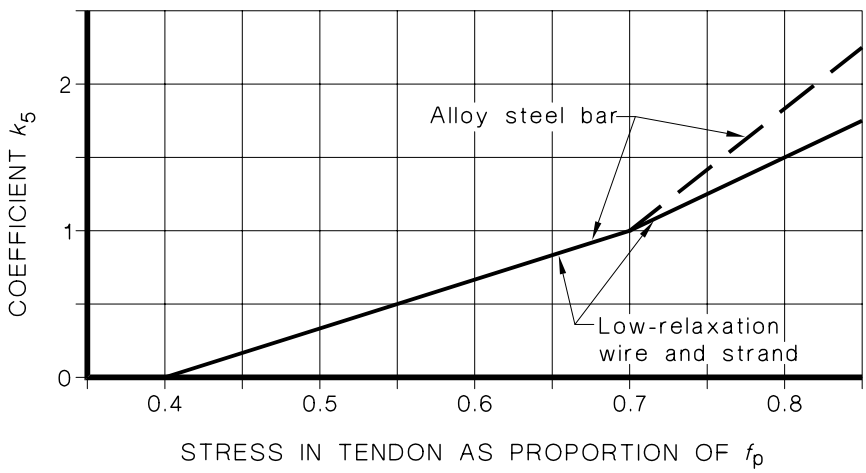

FIGURE 6.3.4.3 COEFFICIENT k_5

6.4 LOSS OF PRESTRESS IN TENDONS

6.4.1 General

The loss of prestress in tendons at any given time shall be taken to be the sum of the immediate loss of prestress and the time-dependent loss of prestress, calculated in accordance with Clauses 6.4.2 and 6.4.3 respectively.

For structures designed to operate above 40°C, special calculations based on appropriate test data shall be made.

6.4.2 Immediate loss of prestress

6.4.2.1 *General*

The immediate loss of prestress shall be estimated by adding the calculated losses of prestress due to elastic deformation of concrete, friction, anchoring and other immediate losses as may be applicable.

Accessed by SWINBURNE UNIVERSITY OF TECHNOLOGY on 15 Aug 2007

@Seismicisolation

@Seismicisolation

6.4.2.2 *Loss of prestress due to elastic deformation of concrete*

Calculation of the immediate loss of prestress due to elastic deformation of the concrete at transfer shall be based on the value of modulus of elasticity of the concrete at that age.

6.4.2.3 *Loss of prestress due to friction*

The stress variation along the design profile of a tendon due to friction in the jack, the anchorage and the duct shall be assessed as follows in order to obtain an estimate of the prestressing forces at the critical sections considered in the design.

The extension of the tendon shall be calculated allowing for the variation in tension along its length.

(a) *Friction in the jack and anchorage* The loss of prestress due to friction in the jack and anchorage shall be determined for the type of jack and anchorage system to be used.

(b) *Friction along the tendon* Friction loss shall be calculated from an analysis of the forces exerted by the tendon on the duct. In the absence of more detailed calculations the stress in the tendon (σ_{pa}) at a distance '*a*', measured from the jacking end, may be taken as —

$$\sigma_{pa} = \sigma_{pj} e^{-\mu(\alpha_{tot} + \beta_p L_{pa})}$$

where

σ_{pi} = the stress in the tendon at the jacking end

e = the base of Napierian logarithms

μ = the friction curvature coefficient for different conditions which, in the absence of specific data and when all tendons in contact in the one duct are stressed simultaneously, may be taken as—

(i) for greased-and-wrapped coating 0.15;

(ii) for bright and zinc-coated metal sheathing 0.15 to 0.20;

(iii) for bright and zinc-coated flat metal ducts 0.20

α_{tot} = the sum in radians of the absolute values of successive angular deviations of the prestressing tendon over the length (L_{pa})

β_p = an estimate, in radians per metre (rad/m), of the angular deviation due to wobble effects, which as a first approximation may be taken as—

(i) for sheathing containing tendons other than bars and having an internal diameter —

$\leq$ 50 mm: 0.024 to 0.016 rad/m

> 50 mm but $\leq$ 90 mm: 0.016 to 0.012 rad/m

> 90 mm but $\leq$ 140 mm: 0.012 to 0.008 rad/m

(ii) for flat metal ducts containing tendons other than bars: 0.024 rad/m to 0.016 rad/m;

(iii) for sheathing containing bars and having an internal diameter of 50 mm or less: 0.016 rad/m to 0.008 rad/m;

(iv) for bars of any diameter in a greased-and-wrapped coating: 0.008 rad/m

L_{pa} = the length of the tendon from the jacking end to a point at a distance '*a*' from that end

The magnitude of the friction due to duct curvature and wobble used in the design shall be verified during the stressing operation.

Accessed by SWINBURNE UNIVERSITY OF TECHNOLOGY on 15 Aug 2007

@Seismicisolation

@Seismicisolation

6.4.2.4 *Loss of prestress during anchoring*

In a post-tensioned member, allowance shall be made for loss of prestress when the prestressing force is transferred from the tensioning equipment to the anchorage. This allowance shall be checked on the site and any adjustment correspondingly required shall be made.

6.4.2.5 *Loss of prestress due to other considerations*

Where applicable, loss of prestress, due to the following, shall be taken into account in design:

(a) Deformation of the forms for precast members.

(b) Differences in temperature between stressed tendons and the actual stressed structures during heat treatment of the concrete.

(c) Changes in temperature between the time of stressing the tendons and the time of casting concrete.

(d) Deformations in the construction joints of precast structures assembled in sections.

(e) Relaxation of the tendon prior to transfer.

6.4.3 Time-dependent losses of prestress

6.4.3.1 *General*

The total time-dependent loss of prestress shall be estimated by adding the calculated losses of prestress due to shrinkage of the concrete, creep of the concrete, tendon relaxation, and other considerations as may be applicable.

6.4.3.2 *Loss of prestress due to shrinkage of the concrete*

The loss of stress in the tendon due to shrinkage of the concrete shall be taken as $E_p\varepsilon_{cs}$, modified to allow for the effects of reinforcement, where ε_{cs} is determined in accordance with Clause 6.1.7.2.

Where reinforcement is distributed throughout the member so that its effect on shrinkage is mainly axial, the loss of prestress in the tendons may be taken as $(E_p\varepsilon_{cs})$ divided by $(1 + 15A_s/A_g)$.

6.4.3.3 *Loss of prestress due to creep of the concrete*

The loss of prestress due to creep of the concrete shall be calculated from an analysis of the creep strains in the concrete. In the absence of more detailed calculations and provided that the sustained stress in the concrete at the level of the tendons at no time exceeds $0.5\,f'_c$, the loss of stress in the tendon due to creep of the concrete may be taken as $E_p.\varepsilon_{cc}$, in which ε_{cc} is given by —

$$\varepsilon_{cc} = \phi_{cc}\left(\sigma_{ci} / E_c\right)$$

where

ϕ_{cc} = the design creep factor, calculated in accordance with Clause 6.1.8.2

σ_{ci} = the sustained stress in the concrete at the level of the centroid of the tendons, calculated using the initial prestressing force prior to any time-dependent losses and the sustained portions of all the service loads given in Clause 3.4

6.4.3.4 *Loss of prestress due to tendon relaxation*

The loss of stress in a tendon due to relaxation of the tendon in the member shall be determined by modifying the percentage loss of stress due to the design relaxation of the tendon (*R*) to take into account the effects of shrinkage and creep.

Accessed by SWINBURNE UNIVERSITY OF TECHNOLOGY on 15 Aug 2007

@Seismicisolation

@Seismicisolation

In the absence of more detailed calculations, the percentage loss of stress in the tendon in the member may be taken as —

$$R\left(1-\frac{\text{the loss of stress due to creep and shrinkage}}{\sigma_{\mathrm{pi}}}\right)$$

where

σ_{pi} = the stress in the tendon immediately after transfer

6.4.3.5 *Loss of prestress due to other considerations*

Account shall be taken, if applicable, of —

(a) losses due to deformations in the joints of precast structures assembled in sections; and

(b) losses due to the effects of any increase in creep caused by frequently repeated loads.

Accessed by SWINBURNE UNIVERSITY OF TECHNOLOGY on 15 Aug 2007

@Seismicisolation

@Seismicisolation

SECTION 7 METHODS OF STRUCTURAL ANALYSIS

7.1 GENERAL

7.1.1 Methods of analysis

For the purpose of complying with the requirements for stability, strength and serviceability specified in Section 2, the action effects in a structure and its component members shall be determined by one of the following methods:

(a) For reinforced continuous beams or one-way slabs, the simplified method given in Clause 7.2.

(b) For reinforced two-way slabs supported by walls or beams on all four sides, the simplified method given in Clause 7.3.

(c) For reinforced two-way slab systems having multiple spans, the simplified method given in Clause 7.4.

(d) For reinforced or prestressed framed structures incorporating two-way slab systems, the idealized frame method given in Clause 7.5.

(e) For reinforced or prestressed structures —

(i) static analysis for determinate structures;

(ii) linear elastic analysis, in accordance with Clause 7.6;

(iii) an elastic analysis incorporating secondary bending moments due to lateral joint displacement, in accordance with Clause 7.7; or

(iv) rigorous structural analysis, in accordance with Clause 7.8.

(f) For slabs and frames, plastic methods of analysis, in accordance with Clause 7.9 or 7.10.

(g) For isolated footings and pile-caps and, where applicable, for combined footings, mats and pile-caps —

(i) where flexural action may be assumed, the methods given in this Section; or

(ii) where flexural action cannot be assumed, the methods given in Section 12.

(h) For non-flexural members, the methods given in Section 12.

(i) For any structure, member, or assembly of members, structural model tests designed and evaluated in accordance with the principles of mechanics.

7.1.2 Definitions

For the purpose of this Section, the following definitions apply:

7.1.2.1 *Column strip*

That portion of the design strip extending transversely from the centre-line of the supports—

(a) for an interior column strip, one-quarter of the distance to the centre-line of each adjacent and parallel row of supports; or

(b) for an edge column strip, to the edge of the slab and one-quarter of the distance to the centre line of the next interior and parallel row of supports,

but of total width not greater than $L/2$, as shown in Figure 7.1.2(A).

Accessed by SWINBURNE UNIVERSITY OF TECHNOLOGY on 15 Aug 2007

@Seismicisolation

@Seismicisolation

7.1.2.2 *Design strip*

That part of a two-way slab system, which is supported, in the direction of bending being considered, by a single row of supports and which in each span extends transversely from the centre-line of the supports —

(a) for an interior design strip, halfway to the centre-line of each adjacent and parallel row of supports; or

(b) for an edge design strip, to the edge of the slab and halfway to the centre-line of the next interior and parallel row of supports (see Figure 7.1.2(A)).

7.1.2.3 *Middle strip*

The portion of the slab between two column strips or between a column strip and a parallel supporting wall (see Figure 7.1.2(A)).

7.1.2.4 *Span support*

The length of a support in the direction of the span (a_s) taken as —

(a) for beams or for flat slabs without either drop panels or column capitals, the distance from the centre-line of the support to the face of the support; or

(b) for flat slabs with drop panels or column capitals or both, the distance from the centre-line of the support to the intersection with the plane of the slab soffit of the longest line, inclined at an angle of 45° to the centre-line of the support, which lies entirely within the surfaces of the slab and the support,

as shown in Figure 7.1.2(B).

For the purpose of Item (b), circular or polygonal columns may be regarded as square columns with the same cross-sectional area.

7.1.2.5 *Transverse width*

The width of the design strip (L_t) measured perpendicular to the direction of bending being considered (see Figure 7.1.2(A)).

Accessed by SWINBURNE UNIVERSITY OF TECHNOLOGY on 15 Aug 2007

@Seismicisolation

@Seismicisolation

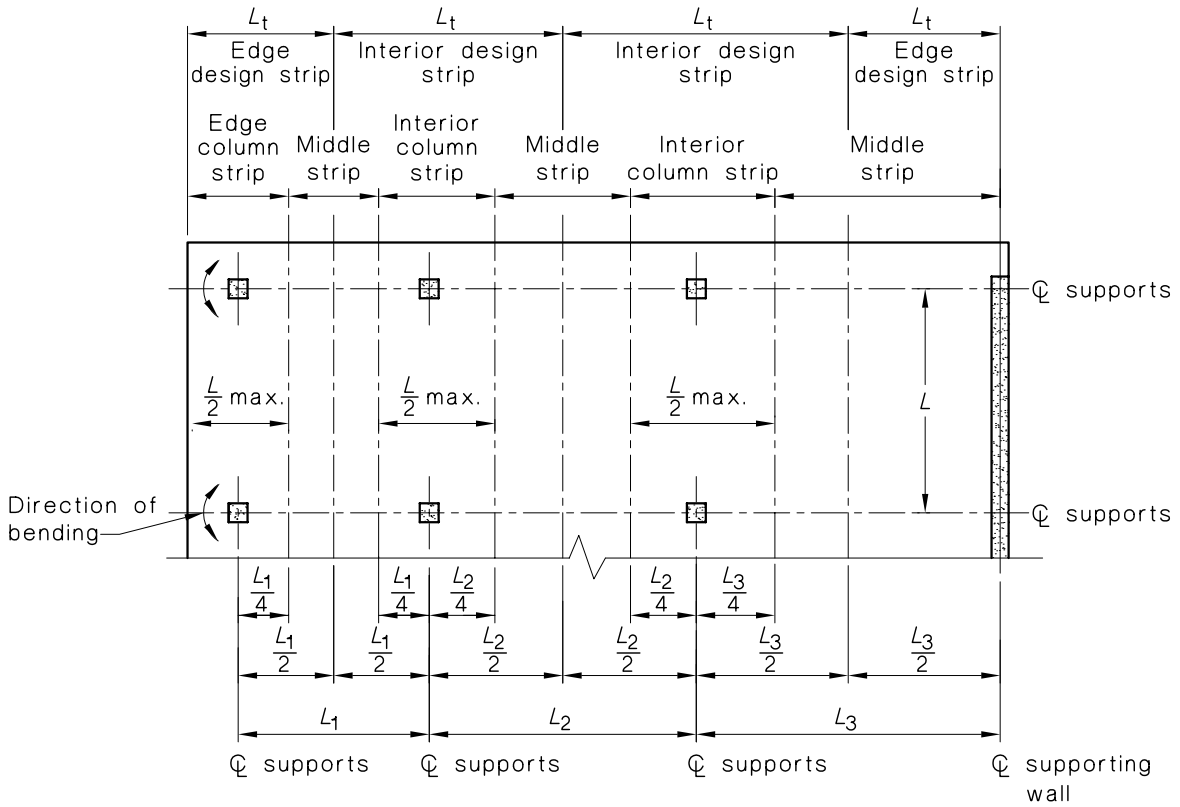

FIGURE 7.1.2(A) WIDTHS OF STRIPS FOR TWO-WAY SLAB SYSTEMS

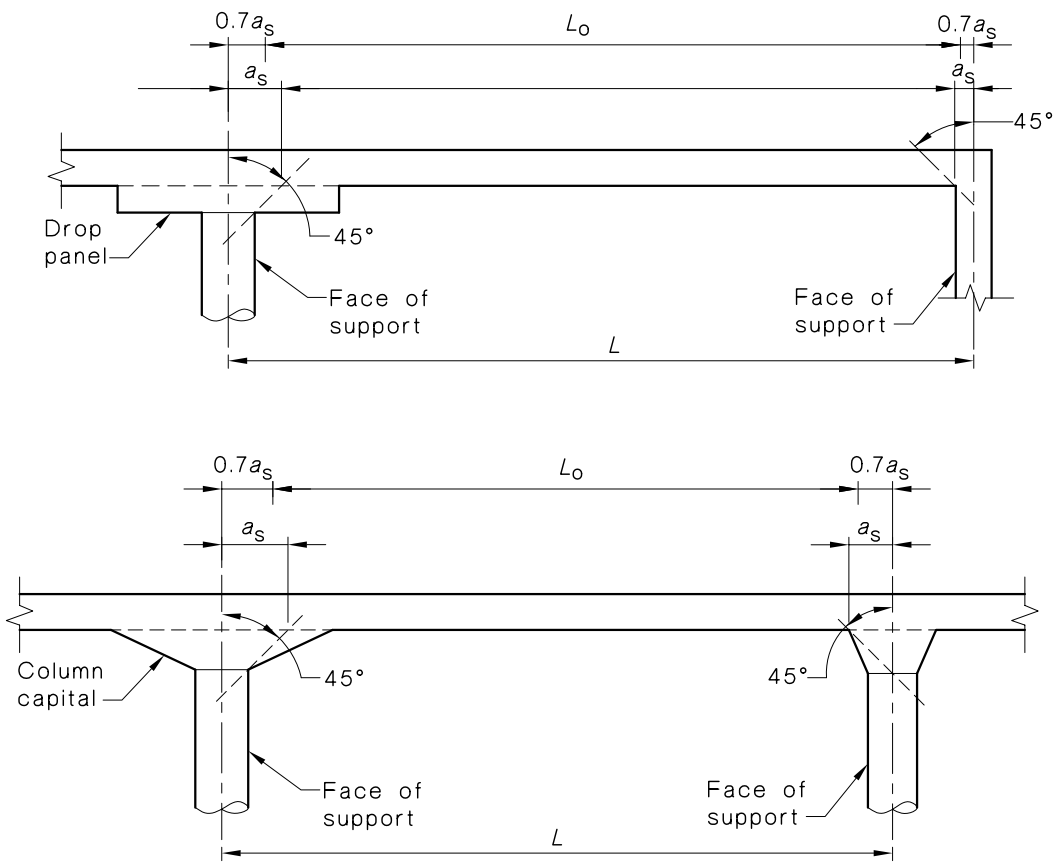

FIGURE 7.1.2(B) SPAN SUPPORT AND SPAN LENGTHS FOR FLAT SLABS

Accessed by SWINBURNE UNIVERSITY OF TECHNOLOGY on 15 Aug 2007

@Seismicisolation

@Seismicisolation

7.2 SIMPLIFIED METHOD FOR REINFORCED CONTINUOUS BEAMS AND ONE-WAY SLABS

7.2.1 Application

Clauses 7.2.2 to 7.2.4 may be used for the calculation of design bending moments and shear forces for strength in continuous beams and one-way slabs of reinforced concrete construction, provided that —

(a) the ratio of the longer to the shorter length of any two adjacent spans does not exceed 1.2;

(b) the loads are essentially uniformly distributed;

(c) the live load (q) does not exceed twice the dead load (g);

(d) members are of uniform cross-section;

(e) the reinforcement is arranged in accordance with the requirements of Clause 8.1.8.6 or Clause 9.1.3.2, as applicable; and

(f) bending moments at supports are caused only by the action of loads applied to the beam or slab.

7.2.2 Negative design moment

The negative design moment at the critical section, taken for the purpose of this Clause at the face of the support, shall be as follows:

(a) At the first interior support:

(i) Two spans only ..... $F_dL_n^2/9$.

(ii) More than two spans..... $F_dL_n^2/10$.

(b) At other interior supports..... $F_dL_n^2/11$.

(c) At interior faces of exterior supports for members built integrally with their supports:

(i) For beams where the support is a column..... $F_dL_n^2/16$.

(ii) For slabs and beams where the support is a beam ..... $F_dL_n^2/24$.

7.2.3 Positive design moment

The positive design moment shall be taken as follows:

(a) In an end span..... $F_dL_n^2/11$.

(b) In interior spans..... $F_dL_n^2/16$.

7.2.4 Transverse design shear force

The transverse design shear force in a member shall be taken as follows:

(a) In an end span:

(i) At the face of the interior support ..... $1.15F_dL_n/2$.

(ii) At mid-span..... $F_dL_n/7$.

(iii) At the face of the end support..... $F_dL_n/2$.

(b) In interior spans:

(i) At the face of supports..... $F_dL_n/2$.

(ii) At mid-span..... $F_dL_n/8$.

Accessed by SWINBURNE UNIVERSITY OF TECHNOLOGY on 15 Aug 2007

@Seismicisolation

@Seismicisolation

7.3 SIMPLIFIED METHOD FOR REINFORCED TWO-WAY SLABS SUPPORTED ON FOUR SIDES

7.3.1 Application

The design bending moments and shear forces for strength in reinforced two-way simply supported or continuous rectangular slabs, which are supported by walls or beams on four sides, may be determined from Clauses 7.3.2 to 7.3.4 provided that—

(a) the loads are essentially uniformly distributed;

(b) the reinforcement is arranged in accordance with the requirements of Clause 9.1.3.3; and

(c) bending moments at supports are caused only by the action of loads applied to the beam or slab.

7.3.2 Design bending moments

The design bending moments in a slab shall be determined as follows:

(a) The positive design bending moments at mid-span, M^*_x and M^*_y, on strips of unit width spanning, L_x and L_y, respectively shall be calculated from the following equations:

$$M^*_x = \beta_x F_d L_x^2$$

$$M^*_y = \beta_y F_d L_x^2$$

where F_d is the uniformly distributed design load per unit area factored for strength and β_x and β_y are given in Table 7.3.2.

The moments, so calculated, shall apply over a central region of the slab equal to three-quarters of L_x and L_y respectively. Outside of this region, the requirement for strength shall be deemed to be complied with by the minimum strength requirement of Clause 9.1.1.

(b) The negative design bending moments at a continuous slab edge shall be taken as 1.33 times the midspan values in the direction considered.

If the negative moment on one side of a common support is different from that on the other side, the unbalanced moment may be redistributed.

(c) The negative design bending moment at a discontinuous edge, where there is a likelihood of restraint, may be taken as half the midspan value in the direction considered.

7.3.3 Torsional moment at exterior corners

The torsional moment at the exterior corners of a slab shall be deemed to be resisted by complying with the requirements of Clause 9.1.3.3.

7.3.4 Load allocation

For calculating shear forces in the slab or the forces applied to the supporting walls or beams in the absence of more accurate calculations, it may be assumed that the uniformly distributed load on the slab is allocated to the supporting beams or walls as shown in Figure 7.3.4.

Accessed by SWINBURNE UNIVERSITY OF TECHNOLOGY on 15 Aug 2007

@Seismicisolation

@Seismicisolation

TABLE 7.3.2

BENDING MOMENT COEFFICIENTS FOR RECTANGULAR SLABS SUPPORTED ON FOUR SIDES

	Edge condition	Short span coefficients (β_x)								Long span coefficients (β_y) for all values of L_y/L_x
		Values of L_y/L_x								
		1.0	1.1	1.2	1.3	1.4	1.5	1.75	≥2.0	
1	Four edges continuous	0.024	0.028	0.032	0.035	0.037	0.040	0.044	0.048	0.024
2	One short edge discontinuous	0.028	0.032	0.036	0.038	0.041	0.043	0.047	0.050	0.028
3	One long edge discontinuous	0.028	0.035	0.041	0.046	0.050	0.054	0.061	0.066	0.028
4	Two short edges discontinuous	0.034	0.038	0.040	0.043	0.045	0.047	0.050	0.053	0.034
5	Two long edges discontinuous	0.034	0.046	0.056	0.065	0.072	0.078	0.091	0.100	0.034
6	Two adjacent edges discontinuous	0.035	0.041	0.046	0.051	0.055	0.058	0.065	0.070	0.035
7	Three edges discontinuous (one long edge continuous)	0.043	0.049	0.053	0.057	0.061	0.064	0.069	0.074	0.043
8	Three edges discontinuous (one short edge continuous)	0.043	0.054	0.064	0.072	0.078	0.084	0.096	0.105	0.043
9	Four edges discontinuous	0.056	0.066	0.074	0.081	0.087	0.093	0.103	0.111	0.056

7.4 SIMPLIFIED METHOD FOR REINFORCED TWO-WAY SLAB SYSTEMS HAVING MULTIPLE SPANS

7.4.1 Application

For multiple-span reinforced two-way slab systems; including solid slabs with or without drop panels, slabs incorporating ribs in two directions (waffle slabs) and beam-and-slab systems including thickened-slab bands, bending moments and shear forces in both directions may be determined in accordance with this Clause provided that the following requirements are met:

(a) There are at least two continuous spans in each direction.

(b) The support grid is rectangular, except that individual supports may be offset up to a maximum of 10% of the span in the direction of the offset.

(c) In any portion of the slab enclosed by the centre-lines of its supporting members, the ratio of the longer span to the shorter span is not greater than 2.0.

(d) In the design strips in each direction, successive span lengths do not differ by more than one third of the longer span and in no case is an end-span longer than the adjacent interior span.

(e) Lateral forces on the structure are resisted by shear walls or braced frames.

(f) Vertical loads are essentially uniformly distributed.

(g) The live load (q) does not exceed twice the dead load (g).

(h) The reinforcement is arranged in accordance with Clause 9.1.3.4 or Clause 8.1.8.6, as applicable.

Accessed by SWINBURNE UNIVERSITY OF TECHNOLOGY on 15 Aug 2007

@Seismicisolation

@Seismicisolation

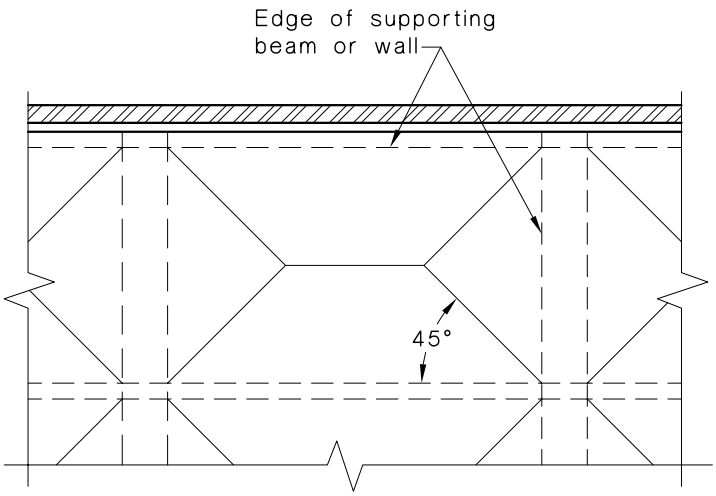

FIGURE 7.3.4 ALLOCATION OF LOAD

7.4.2 Total static moment for a span

The total static moment (M_o), for a span of the design strip shall be taken as not less than—

$$M_o = \frac{F_d L_t L_o^2}{8}$$

where

F_d = the design load per unit area on the slab

L_t = the width of the design strip

L_o = L minus 0.7 times the sum of the values of a_s at each end of the span (see Figure 7.1.2(B))

7.4.3 Design moments

The design moments in a span shall be determined by multiplying the total static moment (M_o) by the relevant factor given in Tables 7.4.3(A) and 7.4.3(B).

These design moments may be modified by up to 10% provided that the total static moment (M_o) for the span in the direction considered is not reduced.

The section under negative moment shall be designed to resist the larger of the two interior negative design moments determined for the spans framing into a common support, unless an analysis is made to distribute the unbalanced moment in accordance with the stiffness of the adjoining members.

Accessed by SWINBURNE UNIVERSITY OF TECHNOLOGY on 15 Aug 2007

@Seismicisolation

@Seismicisolation

TABLE 7.4.3(A)

DESIGN MOMENT FACTORS FOR AN END SPAN

Type of slab system and edge rotation restraint	Exterior negative moment factor	Positive moment factor	Interior negative moment factor
Flat slabs with exterior edge unrestrained	0.0	0.60	0.80
Flat slabs with exterior edge restrained by columns only	0.25	0.50	0.75
Flat slabs with exterior edge restrained by spandrel beams and columns	0.30	0.50	0.70
Flat slabs with exterior edge fully restrained	0.65	0.35	0.65
Beam-and-slab construction	0.15	0.55	0.75

TABLE 7.4.3(B)

DESIGN MOMENT FACTORS FOR AN INTERIOR SPAN

Type of slab system	Negative moment factor	Positive moment factor
All types	0.65	0.35

7.4.4 Transverse distribution of the design bending moment

The design negative and positive bending moments shall be distributed to the column strip and middle strip in accordance with Clause 7.5.5.

7.4.5 Moment transfer for shear in flat slabs

For the purpose of shear design, the bending moment, transferred from the slab to the support (M^*_v) shall be taken as the unbalanced bending moment at that support.

At an interior support, M^*_v shall be taken as not less than —

$$0.06\left[(1.25g + 0.75q)L_t(L_o)^2 - 1.25g\ L_t(L'_o)^2\right]$$

where

L'_o = is the smaller value of L_o for the adjoining spans

At an exterior support, the actual moment shall be taken.

7.4.6 Shear forces in beam-and-slab construction

In beam-and-slab construction, the shear forces in the supporting beams may be determined by using the allocation of load given in Clause 7.3.4.

7.4.7 Openings in slabs

Only openings that comply with the requirements of Clauses 7.5.7(a) and 7.5.7(b) shall be permitted in slabs.

Accessed by SWINBURNE UNIVERSITY OF TECHNOLOGY on 15 Aug 2007

@Seismicisolation

@Seismicisolation

7.5 IDEALIZED FRAME METHOD FOR STRUCTURES INCORPORATING TWO-WAY SLAB SYSTEMS

7.5.1 Application

This Clause applies to the analysis of reinforced and prestressed framed structures incorporating two-way slab systems having multiple spans including—

(a) solid slabs with or without drop panels;

(b) slabs incorporating ribs in two directions, including waffle-slabs;

(c) slabs having recessed soffits, if the portion of reduced thickness lies entirely within both middle strips;

(d) slabs having openings complying with the requirements of Clause 7.5.7; and

(e) beam-and-slab systems, including thickened slab bands.

7.5.2 The idealized frame

The idealized frame shall be one of a series of approximately parallel frames running longitudinally through the building, and a second series running transversely through the building.

Each idealized frame shall consist of the structure formed by the full height of a row of vertical supports, including footings and the design strips at each floor level supported by them.

7.5.3 Arrangement of vertical load for buildings

For building structures, the arrangement of vertical loads considered in the analysis shall consist of at least the following:

(a) Where the live loading pattern is fixed, the factored live load.

(b) Where the live load (Q) is variable but is not greater than three-quarters of the dead load (G), factored live load on all spans.

(c) Where the live load (Q) is variable and exceeds three-quarters of the dead load (G) for the floor under consideration—

  (i) three-quarters of the factored live load on alternate spans;

  (ii) three-quarters of the factored live load on two adjacent spans; and

  (iii) factored live load on all spans.

(d) The factored dead load, but patterned variations of factored dead loads need not be considered.

7.5.4 Calculation of action effects in the idealized frame

Each idealized frame shall be analysed in its entirety except that, for vertical loads on the frame it shall be permissible to analyse one floor at a time in accordance with Clause 7.6.2.

The bending moments, shear forces and axial forces in the idealized frame shall be calculated in accordance with the requirements for the linear elastic analysis of frames as specified in Clause 7.6 except that Clause 7.6.4 shall not apply.

Any change in length of columns and slabs due to axial force and any deflection due to shear force may be neglected.

Accessed by SWINBURNE UNIVERSITY OF TECHNOLOGY on 15 Aug 2007

@Seismicisolation

@Seismicisolation

The effective width of the idealized frame to be used in the determination of bending moments, varies depending on span length and column size and may be different for vertical and lateral forces. In the absence of more accurate calculations, the stiffness of horizontal flexural members at each floor level for a vertical load analysis may be based on a width —

(a) for flat slabs, equal to the width of the design strip, L_t; or

(b) for T-beams and L-beams, calculated in accordance with Clause 8.8.2.

7.5.5 Distribution of bending moments between column and middle strips

In the idealized frame method each design strip shall be divided into column strips and middle strips.

The column strip shall be designed to resist the total negative or positive bending moment at the critical cross-sections multiplied by an appropriate factor within the ranges given in Table 7.5.5.

That part of the design strip bending moment not resisted by the column strip shall be proportionally assigned to the half-middle strips on either side of it.

Each middle strip shall be designed to resist the sum of the moments assigned to its two adjoining halves, except that a middle strip adjacent to and parallel with an edge supported by a wall shall be designed to resist twice the bending moment assigned to the adjoining half middle strip from the next interior design strip parallel to the wall.

TABLE 7.5.5

DISTRIBUTION OF BENDING MOMENTS TO THE COLUMN STRIP

Bending moment under consideration	Column strip moment factor
Negative moment at an interior support	0.60 to 1.00
Negative moment at an exterior support	0.75 to 1.00
Positive moment at all spans	0.50 to 0.70

7.5.6 Torsional moments

Where moment is transferred to the column by torsional moment in the slab or spandrel beams, the slab or spandrel beams shall be designed in accordance with Clause 8.3 or Clause 9.2, as applicable.

In beam-and-slab construction, the spandrel beams shall be reinforced with at least the minimum torsional reinforcement required by Clause 8.3.7.

7.5.7 Openings in slabs

Slabs containing openings may be analysed in accordance with all of Clause 7.5 without the need for further calculation provided that the amount of reinforcement interrupted by the opening is distributed to each side of the opening and the plan dimensions of the opening are no larger than the following:

(a) The width of each middle strip, in the area common to two middle strips.

(b) One-quarter of the width of each strip, in the area common to a column strip and a middle strip.

(c) One-eighth of the width of each column strip, in the area common to two column strips, provided that the reduced section is capable of transferring the moment and shear forces to the support. The slab shall also comply with the shear requirements of Clause 9.2.

Accessed by SWINBURNE UNIVERSITY OF TECHNOLOGY on 15 Aug 2007

@Seismicisolation

@Seismicisolation

7.6 LINEAR ELASTIC ANALYSIS

7.6.1 Application

Linear elastic analysis may be used for the purpose of determining the action effects in a structure for strength and serviceability design.

For a structure that can be represented as a framework of line members, the analysis shall comply with Clauses 7.6.2 to 7.6.11. For other structures, the analysis shall comply with the general principles of these Clauses, as appropriate.

7.6.2 General

In the analysis of multistorey buildings, in situ concrete floor slabs may be assumed to act as horizontal diaphragms that distribute lateral forces to the framework.

Where the construction involves prefabricated elements supporting in situ construction, consideration in the analysis shall be given to the proposed construction sequence and the degree of propping of the prefabricated elements during construction.

The framework shall be analysed in its entirety, except that the following simplifications may be used:

(a) Regular building structures analysed as a series of parallel frames, the analysis being carried out in each of two directions at right angles.

(b) For beam and slab moments due to vertical loading in a building structure, each level thereof together with the columns as they occur above and below analysed separately, the columns being assumed fixed at the ends remote from the level under consideration. The bending moment at a given support determined on the assumption that the floor is fixed at the support one span away provided that the floor continues beyond that point.

(c) For column forces and moments due to vertical loading in a building structure, each level of columns together with the floors above and below, if any, analysed separately, the columns being assumed fixed against rotation and translation at their remote ends and the floors being assumed fixed at the adjacent supports.

7.6.3 Span length

The span length of flexural members shall be taken as the distance centre-to-centre of supports.

7.6.4 Arrangement of vertical live loads for buildings

For building structures, the arrangement of vertical live loads considered in the analysis shall consist of at least the following:

(a) Where the live loading pattern is fixed—the factored live load.

(b) Where the live load (Q) is variable and is not greater than three-quarters of the resultant load due to dead load (G) and prestress—the factored live load on all spans.

(c) Where the live load (Q) is variable and exceeds three-quarters of the resultant load due to dead load (G) and prestress—

  (i) the factored live load on alternate spans;

  (ii) the factored live load on two adjacent spans; and

  (iii) the factored live load on all spans.

Accessed by SWINBURNE UNIVERSITY OF TECHNOLOGY on 15 Aug 2007

@Seismicisolation

@Seismicisolation

7.6.5 Stiffness

7.6.5.1 *General*

In the calculation of deformations and action effects in a structure, for both the serviceability and strength limit states, an estimate of the stiffness of each member shall be based on either—

(a) the dimensions of the uncracked (gross) cross-sections; or

(b) other reasonable assumptions, which better represent conditions at the limit state being considered, provided they are applied consistently throughout the analysis.

The effect of haunching and other variations of cross-section along the axis of a member shall be considered and, where significant, taken into account in the determination of the member stiffness.

7.6.5.2 *Relative stiffness*

In the calculation of the relative stiffness of members for analysis, any reasonable assumption may be made. All such assumptions shall be applied consistently throughout the analysis.

The effect of haunching and variation of the cross-section along the axis of a member shall be considered and, where significant, taken into account in the determination of relative stiffness.

7.6.5.3 *Member stiffness*

The assumed stiffness of members shall be chosen to represent conditions at the limit state being analysed.

7.6.6 Deflections

The calculated deflections shall take into account the effects of cracking, tension stiffening, shrinkage, creep, and relaxation. Calculations in accordance with the requirements of Clauses 8.5 and 9.3 shall be deemed to satisfy this requirement. Where appropriate, consideration shall be given to deformation that may result due to deflection of the formwork or settlement of the supporting props during construction.

7.6.7 Secondary bending moments and shear resulting from prestress

The secondary bending moments and shears, and associated deformations that are produced in an indeterminate structure by prestressing, shall be taken into account in the design calculations for serviceability.

The secondary bending moments and shears may be determined by elastic analysis of the unloaded, uncracked structure for the effects of prestress.

In design calculations for strength, the secondary bending moments and shears shall be included with a load factor of 1.0 when the design moments and shears for the load combinations given in Clause 3.3.1 are calculated. For the special case of dead load plus prestress at transfer, the load factors given by Clause 3.3.1 shall apply.

7.6.8 Moment redistribution in reinforced concrete members for strength design

7.6.8.1 *General requirements*

In design calculations for strength of statically indeterminate reinforced concrete members, the elastically determined bending moments at any interior support may be reduced or increased by redistribution, provided an analysis is undertaken to show that there is adequate rotation capacity in critical moment regions to allow the assumed distribution of bending moments to be achieved.

Accessed by SWINBURNE UNIVERSITY OF TECHNOLOGY on 15 Aug 2007

@Seismicisolation

@Seismicisolation

The analysis shall take into account—

(a) the stress-strain curve of the steel reinforcement as defined in Clause 6.2.3 assuming for analysis purposes that fracture of the reinforcement occurs at ε_{su};

(b) static equilibrium of the structure after redistribution of the moments; and

(c) the properties of the concrete as defined in Clause 6.1.

Special consideration shall be given to the detrimental effects that significant relative foundation movements can have on the strength of continuous beams and slabs incorporating Ductility Class L reinforcing steel (low ductility) as the main reinforcement.

7.6.8.2 *Simplified approach for Class N reinforcement*

The requirement of Clause 7.6.8.1 shall be deemed to be met provided the following requirements are satisfied:

(a) All of the main reinforcement in the member is Ductility Class N.

(b) The elastic bending moment distribution before redistribution is determined in accordance with Clause 7.6.5(a) assuming uncracked cross-sections.

(c) The positive bending moment is adjusted to maintain equilibrium.

(d) Where the neutral axis parameter (k_u) is less than or equal to 0.2 in all peak moment regions, the redistribution does not exceed 30%.

(e) Where k_u exceeds 0.2 in one or more peak moment regions, but does not exceed 0.4, the redistribution does not exceed 75 (0.4 – k_u)%.

(f) Where k_u exceeds 0.4 in any peak moment region, no redistribution is made.

NOTES:

The values of k_u are calculated for cross-sections that have been designed on the basis of the redistributed moment diagram.

The amount of redistribution is measured by the percentage of the bending moment before redistribution.

7.6.8.3 *Approval for Class L reinforcement*

Where Ductility Class L reinforcement is used, moment redistribution shall not be permitted unless an analysis, as specified in Clause 7.6.8.1, is undertaken.

7.6.9 Moment redistribution in prestressed concrete members for strength design

In the design of continuous prestressed concrete members for strength, the resultant elastically determined negative moment at any intermediate support, including the secondary moment, may be reduced or increased in accordance with the requirements of Clause 7.6.8.

7.6.10 Critical section for negative moments

The critical section for maximum negative bending moment shall be taken at 0.7 times the span support (a_s) from the centre-line of the support.

7.6.11 Minimum transverse shear

Where the design is based on uniformly distributed live loads, in order to provide for live load on part of the span, the minimum live load shear force to be resisted by any section of the member shall be taken as not less than one quarter of the maximum live load shear force in the member.

Accessed by SWINBURNE UNIVERSITY OF TECHNOLOGY on 15 Aug 2007

@Seismicisolation

@Seismicisolation

7.7 ELASTIC ANALYSIS OF FRAMES INCORPORATING SECONDARY BENDING MOMENTS

7.7.1 Application

This Clause applies to the analysis of frames not restrained by bracing or shear walls, or both, for which the relative displacement at the ends of compression members is less than $L_u/250$ under the design loads for strength.

7.7.2 General

An elastic analysis incorporating secondary bending moments shall comply with the requirements of Clause 7.6 and the following:

(a) The effect of lateral joint displacements shall be taken into account.

(b) For strength design of a regular rectangular framed structure, the cross-sectional stiffness of the flexural members and columns may be taken as $0.4E_cI_f$ and $0.8E_cI_c$ respectively.

(c) For very slender members the change in bending stiffness of a member due to axial compression shall be considered.

7.8 RIGOROUS STRUCTURAL ANALYSIS

7.8.1 General

A rigorous structural analysis shall take into account the relevant material properties, geometric effects, three-dimensional effects and interaction with the foundations as specified in Clauses 7.8.2 to 7.8.6.

7.8.2 Material properties

The influence of the following material properties shall be taken into account:

(a) Non-linear relation between stress and strain in the concrete.

(b) Creep and shrinkage of the concrete.

(c) Concrete cracking.

(d) Tension stiffening.

(e) Non-linear behaviour of the steel.

7.8.3 Geometric effects

Equilibrium of the structure in the deformed condition shall be taken into account whenever deflections within the length of an axially loaded member, or relative end displacements significantly influence the magnitude and distribution of action effects in the structure.

7.8.4 Three-dimensional effects

The three-dimensional nature of the structure shall be taken into account in the interpretation of the results of the analysis and, if relevant, in the analysis itself.

7.8.5 Interaction with the foundations

Interaction with the foundations shall be taken into account in the analysis.

7.8.6 Construction sequence and propping

The effects of construction sequences and techniques, including temporary propping, shall be considered in the analysis.

Accessed by SWINBURNE UNIVERSITY OF TECHNOLOGY on 15 Aug 2007

@Seismicisolation

@Seismicisolation

7.9 PLASTIC METHODS OF ANALYSIS FOR SLABS

7.9.1 General

Plastic methods of analysis based on lower bound or yield line theory may be used for the analysis for strength of one-way and two-way slabs, provided Ductility Class N reinforcement is used throughout. The reinforcement shall be arranged with due regard to the serviceability requirements.

7.9.2 Lower bound method

The design bending moments obtained using lower bound theory shall satisfy the requirements of equilibrium and the boundary conditions applicable to the slab.

7.9.3 Yield line method

A yield line analysis for strength design of a slab shall satisfy the following requirements:

(a) The design bending moments shall be obtained from calculations based on the need for a mechanism to form over the whole or part of the slab at collapse.

(b) The mechanism that gives rise to the most severe design bending moments shall be used for the design of the slab.

7.10 PLASTIC METHODS OF ANALYSIS OF FRAMES

Plastic methods of analysis may be used for the strength design of frames and continuous beams provided that the structure can be shown to possess the moment-rotation capacities required, to achieve the plastic redistribution of moments implied in the analysis.

Accessed by SWINBURNE UNIVERSITY OF TECHNOLOGY on 15 Aug 2007

@Seismicisolation

@Seismicisolation

SECTION 8 BEAMS FOR STRENGTH AND SERVICEABILITY

8.1 STRENGTH OF BEAMS IN BENDING

8.1.1 General`

The strength of a beam cross-section under bending shall be determined using Clauses 8.1.2 to 8.1.8, the material properties given in Section 6 and the beam properties given in Clause 8.8.

This Clause does not apply to non-flexural members covered by Section 12.

8.1.2 Basic principles

8.1.2.1 *Combined bending and axial force*

Calculations for strength of cross-sections in bending, or in bending combined with axial force, shall incorporate equilibrium and strain-compatibility considerations and be consistent with the following assumptions:

(a) Plane sections normal to the axis remain plane after bending.

(b) The concrete has no tensile strength.

(c) The distribution of compressive stress is determined from a stress-strain relationship for the concrete in accordance with Clause 6.1.4 (see Note below).

(d) The strain in compressive reinforcement does not exceed 0.003.

NOTE: If a curvilinear stress-strain relationship is used, Clause 6.1.4 places a limit on the value of the maximum concrete stress.

8.1.2.2 *Rectangular stress block*

Where the neutral axis lies within the cross-section and provided that the maximum strain in the extreme compression fibre of the concrete is taken as 0.003, Clause 8.1.2.1(c) shall be deemed to be satisfied by assuming that a uniform compressive stress of 0.85 f'_c acts on an area bounded by —

(a) the edges of the cross-section; and

(b) a line parallel to the neutral axis at the strength limit state under the loading concerned, and located at a distance $\gamma k_u d$ from the extreme compressive fibre where—

$$\gamma = \left[0.85 - 0.007\left(f'_c - 28\right)\right] \text{ with the limits 0.65 to 0.85}$$

NOTE: The modification given in Clause 6.1.4 is included in the rectangular stress block assumptions.

8.1.2.3 *Dispersion angle of prestress*

In the absence of a more exact calculation, the dispersion angle of the prestressing force from the anchorage shall be assumed to be 60°, i.e. 30° either side of the centre-line.

8.1.3 Design strength in bending

The design strength in bending of a section with the neutral axis parameter (k_u) not greater than 0.4 shall be taken as ϕM_{uo}.

In peak moment regions, sections with k_u greater than 0.4 should be avoided. Sections with k_u greater than 0.4 shall not be used, unless all the following requirements are met:

(a) The structural analysis shall be carried out in accordance with Clauses 7.6 to 7.8.

Accessed by SWINBURNE UNIVERSITY OF TECHNOLOGY on 15 Aug 2007

@Seismicisolation

@Seismicisolation

(b) Compression reinforcement of at least 0.01 times the area of concrete in compression shall be provided.

(c) The design strength in bending shall be taken as ϕM_{uo}, where ϕ is determined from Item (b) (ii) of Table 2.3.

In the determination of ϕ, M_{ud} is the reduced ultimate strength of the cross-section in bending where $k_u = 0.4$ and the tensile force has been reduced to balance the reduced compressive force.

M_{ud} may be calculated by assuming that—

(i) there are no axial forces acting on the cross-section;

(ii) the concrete strain at the extreme compression fibre is 0.003;

(iii) the effective depth (d) is calculated for M_{uo};

(iv) k_u is reduced to 0.4; and

(v) the resultant of the tensile forces in the reinforcement and tendon is equal to the reduced compressive force calculated on the above assumptions.

8.1.4 Minimum strength requirements

8.1.4.1 *General*

The ultimate strength in bending (M_{uo}), at critical sections shall not be less than $(M_{uo})_{min.}$ given by—

$$(M_{uo})_{min.} = 1.2[Z(f'_{cf} + P/A_g) + Pe]$$

where

Z = the section modulus of the uncracked section, referred to the extreme fibre at which flexural cracking occurs

f'_{cf} = the characteristic flexural tensile strength of the concrete

e = the eccentricity of the prestressing force (P), measured from the centroidal axis of the uncracked section

This requirement may be waived at some critical sections of an indeterminate member provided it can be demonstrated that this will not lead to sudden collapse of a span.

For rectangular reinforced concrete cross-sections, the requirement that $M_{uo} \geq (M_{uo})_{min.}$ shall be deemed to be satisfied for the direction of bending being considered if minimum tensile reinforcement is provided such that—

$$A_{st}/bd \geq 0.22\,(D/d)^2\ f'_{cf}/f_{sy}$$

8.1.4.2 *Prestressed beams at transfer*

The strength of a prestressed beam at transfer shall be checked using the load combinations specified in Clause 3.3.1 and a strength reduction factor (ϕ) for the section of 0.6.

This requirement shall be deemed to be satisfied if the maximum compressive stress in the concrete, under the loads at transfer, does not exceed $0.5f_{cp}$.

8.1.5 Stress in reinforcement and bonded tendons at ultimate strength

The stress in the reinforcement at ultimate strength shall be taken as not greater than f_{sy}.

Accessed by SWINBURNE UNIVERSITY OF TECHNOLOGY on 15 Aug 2007

@Seismicisolation

@Seismicisolation

In the absence of a more accurate calculation and provided that the minimum effective stress in the tendons is not less than $0.5f_p$, the maximum stress which would be reached in bonded tendons at ultimate strength (σ_{pu}) shall be taken as —

$$\sigma_{pu} = f_p \left(1 - \frac{k_1 k_2}{\gamma}\right)$$

where

k_1 = 0.4 generally; or

if $f_{py} / f_p \geq 0.9$,

k_1 = 0.28; and

$$k_2 = \frac{1}{b_{ef}\, d_p\, f'_c} \left[A_{pt}\, f_p + \left(A_{st} - A_{sc}\right) f_{sy}\right]$$

Compression reinforcement may only be taken into account if d_{sc} is not greater than $0.15d_p$, in which case k_2 shall be taken as not less than 0.17.

8.1.6 Stress in tendons not yet bonded

Where the tendon is not yet bonded, the stress in the tendon at ultimate strength (σ_{pu}) shall be determined from the formula given in Item (a) below if the span-to-depth ratio is 35 or less, or from the formula given in Item (b) below if the span-to-depth ratio is greater than 35 but in no case shall σ_{pu} be taken greater than f_{py} —

(a) $$\sigma_{pu} = \sigma_{p.ef} + 70 + \frac{f'_c\, b_{ef}\, d_p}{100\, A_{pt}} \leq \sigma_{p.ef} + 400$$

(b) $$\sigma_{pu} = \sigma_{p.ef} + 70 + \frac{f'_c\, b_{ef}\, d_p}{300 A_{pt}} \leq \sigma_{p.ef} + 200$$

where $\sigma_{p.ef}$ is the effective stress in the tendon after allowing for all losses.

8.1.7 Spacing of reinforcement and tendons

The minimum clear distance between parallel bars (including bundled bars), ducts and tendons shall be such that the concrete can be properly placed and compacted in accordance with Clause 19.1.3. The maximum spacing of longitudinal reinforcement and tendons shall be determined in accordance with Clause 8.6.

8.1.8 Detailing of flexural reinforcement and tendons

8.1.8.1 *General procedure for detailing reinforcement and tendons*

The detailing of flexural reinforcement and tendons, including termination, anchorage and debonding, shall be based on a hypothetical bending-moment diagram formed by uniformly displacing the calculated positive and negative bending moment envelopes a distance D along the beam from each side of the relevant section of maximum moment.

8.1.8.2 *Distribution of reinforcement*

Tensile reinforcement shall be well distributed in zones of maximum concrete tension, including those portions of flanges of T-beams, L-beams and I-beams over a support.

8.1.8.3 *Continuation of negative moment reinforcement*

Not less than one-third of the total negative moment tensile reinforcement required at a support shall be extended a distance D beyond the point of contra-flexure.

Accessed by SWINBURNE UNIVERSITY OF TECHNOLOGY on 15 Aug 2007

@Seismicisolation

@Seismicisolation

8.1.8.4 *Anchorage of positive moment reinforcement*

Anchorage of positive moment reinforcement shall comply with the following requirements:

(a) At a simple support, sufficient positive moment reinforcement shall be anchored past the face of the support for a length L_{st} such that the anchored reinforcement can develop a tensile force of $1.5V^*$ at the face of the support, where V^* is the design shear force at a distance, d, from that face and L_{st} is determined from Clause 13.1.2.3.

(b) At a simple support, of the tensile reinforcement required at mid-span, not less than either —

(i) one-half shall extend past the face of the support for a length of $12d_b$ or an equivalent anchorage; or

(ii) one-third shall extend past the face of the support for a length of $8d_b$ plus $D/2$.

(c) At a support where the beam is continuous or flexurally restrained, not less than one quarter of the total positive moment reinforcement required at midspan shall continue past the near face of the support.

8.1.8.5 *Shear strength requirements near terminated flexural reinforcement*

If tensile reinforcement is terminated, the effect on the shear strength shall be assessed in accordance with the principles of the truss analogy.

This requirement shall be deemed to be satisfied if any one of the following conditions is met:

(a) Not more than a quarter of the maximum tensile reinforcement is terminated within any distance $2D$.

(b) At the cut-off point, $\phi V_u \geq 1.5V^*$.

(c) Stirrups are provided to give an area of shear reinforcement of $A_{sv} + A_{sv.min.}$ for a distance D along the terminated bar from the cut-off point, where A_{sv} and $A_{sv.min.}$ are determined in accordance with Clause 8.2.

8.1.8.6 *Deemed to comply arrangement of flexural reinforcement*

For continuous reinforced beams where the ratio of the longer to the shorter length of any two adjacent spans does not exceed 1.2 and where the loads are uniformly distributed and the live load (q) does not exceed twice the dead load (g) compliance with the following shall be deemed to satisfy the requirements of Clauses 8.1.8.2 to 8.1.8.5.

(a) Of the negative moment tensile reinforcement provided at the support —

(i) not less than one-quarter shall extend over the whole span;

(ii) not less than one-half shall extend $0.3L_n$ or more beyond the face of the support; and

(iii) the remainder, if any, shall extend $0.2L_n$ or more beyond the face of the support.

Where adjacent spans are unequal, the extension of negative reinforcement beyond each face of the common support shall be based on the longer span.

(b) Of the positive moment tensile reinforcement provided at mid-span —

(i) not less than one-half shall extend into a simple support for a length of $12d_b$;

(ii) not less than one-quarter shall extend into a support where the beam is continuous or flexurally restrained; and

(iii) the remainder, if any, shall extend to within $0.1L_n$ from the face of the support.

(c) To comply with shear requirements, not more than a quarter of the maximum tensile reinforcement shall be terminated within any distance $2D$.

Accessed by SWINBURNE UNIVERSITY OF TECHNOLOGY on 15 Aug 2007

@Seismicisolation

@Seismicisolation

8.1.8.7 *Restraint of compression reinforcement*

Compression reinforcement required for strength in beams shall be adequately restrained by fitments in accordance with Clause 10.7.3.

8.1.8.8 *Bundled bars*

Groups of parallel longitudinal bars bundled to act as a unit shall—

(a) have not more than four bars in any one bundle;

(b) be tied together in contact; and

(c) be enclosed within stirrups or ties.

Individual bars within a bundle, terminated within the span of flexural members, shall terminate at different points staggered by at least 40 times the diameter of the larger bar.

The unit of bundled bars shall be treated as an equivalent single bar of diameter derived from the total area of the bars in the bundle.

8.1.8.9 *Detailing of tendons*

In prestressed members—

(a) the tendons shall be arranged so that the flexural strength required by Clause 8.1.8.1 is achieved in all cross-sections;

(b) anchorages and stress development, as appropriate, shall be provided for all tendons in accordance with Sections 12 and 13; and

(c) at a simple support of a pretensioned member, at least one-third of the tendons required at the section of maximum positive moment shall be continued to the end of the member without debonding.

8.2 STRENGTH OF BEAMS IN SHEAR

8.2.1 Application

This Clause applies to reinforced and prestressed beams—

(a) subjected to shear force, bending moment and axial force; or

(b) subjected to shear force, bending moment and axial force in combination with torsion, provided that the additional requirements given in Clause 8.3 are complied with.

This Clause does not apply to non-flexural members covered by Section 12.

8.2.2 Design shear strength of a beam

The design shear strength of a beam shall be taken as ϕV_u where either—

(a) $V_u = V_{uc} + V_{us}$, taking account of Clauses 8.2.3 to 8.2.6, where V_{uc} is determined from Clause 8.2.7 and V_{us} is determined from Clauses 8.2.9 and 8.2.10; or

(b) V_u is calculated by means of a method based on the truss analogy, in which case Clauses 8.2.3 to 8.2.10 may not apply.

8.2.3 Tapered members

In members that are tapered along their length, the components of inclined tension or compression forces shall be taken into account in the calculation of shear strength.

8.2.4 Maximum transverse shear near a support

The maximum transverse shear near a support shall be taken as the shear at—

(a) the face of the support; or

Accessed by SWINBURNE UNIVERSITY OF TECHNOLOGY on 15 Aug 2007

@Seismicisolation

@Seismicisolation

(b) a distance of d_o from the face of the support, provided that—

(i) diagonal cracking can not take place at the support or extend into it;

(ii) there are no concentrated loads closer than $2d_o$ from the face of the support;

(iii) the value of β_3 in Clauses 8.2.7.1 and 8.2.7.2 is taken to be equal to one; and

(iv) the transverse shear reinforcement required at d_o from the support is continued unchanged to the face of the support.

In both Items (a) and (b) above, longitudinal tensile reinforcement required at d_o from the face of the support shall be continued onto the support and shall be fully anchored past that face.

8.2.5 Requirements for shear reinforcement

The following requirements for shear reinforcement shall apply:

(a) Where $V^* \leq 0.5\phi V_{uc}$, no shear reinforcement is required, except that where the overall depth of the beam exceeds 750 mm, minimum shear reinforcement shall be provided in accordance with Clause 8.2.8.

(b) Where $0.5\phi V_{uc} < V^* \leq \phi V_{u.min.}$, minimum shear reinforcement ($A_{sv.min.}$) shall be provided in accordance with Clause 8.2.8.

(c) The minimum shear reinforcement requirements of Items (a) and (b) may be waived—

(i) for beams, if $V^* \leq \phi V_{uc}$ and D does not exceed the greater of 250 mm and half the width of the web; and

(ii) for slabs to which this Clause applies, if $V^* \leq \phi V_{uc}$.

(d) Where $V^* > \phi V_{u.min.}$ shear reinforcement shall be provided in accordance with Clause 8.2.10.

8.2.6 Shear strength limited by web crushing

In no case shall the ultimate shear strength (V_u) be taken as greater than—

$$V_{u.max.} = 0.2\ f'_c\ b_v\ d_o + P_v$$

where

b_v = $(b_w - 0.5\Sigma d_d)$

Σd_d = the sum of the diameters of the grouted ducts, if any, in a horizontal plane across the web

P_v = the vertical component of the prestressing force at the section under consideration

8.2.7 Shear strength of a beam excluding shear reinforcement

8.2.7.1 *Reinforced beams*

The ultimate shear strength (V_{uc}) of a reinforced beam, excluding the contribution of shear reinforcement, shall be calculated from the following equation:

$$V_{uc} = \beta_1\ \beta_2\ \beta_3\ b_v\ d_o \left(\frac{A_{st}\ f'_c}{b_v\ d_o}\right)^{1/3}$$

Accessed by SWINBURNE UNIVERSITY OF TECHNOLOGY on 15 Aug 2007

@Seismicisolation

@Seismicisolation

where

β_1 = $1.1(1.6 - d_o/1000) \geq 1.1$

β_2 = 1; or

= $1 - (N^*/3.5A_g) \geq 0$ for members subject to significant axial tension; or

= $1 + (N^*/14A_g)$ for members subject to significant axial compression

β_3 = 1; or may be taken as—

= $2d_o/a_v$ but not greater than 2, provided that the applied loads and the support are orientated so as to create diagonal compression over the length a_v

A_{st} = cross-sectional area of longitudinal reinforcement provided in the tension zone and fully anchored at the cross-section under consideration

8.2.7.2 *Prestressed beams*

The ultimate shear strength (V_{uc}) of a prestressed beam, excluding the contribution of shear reinforcement, shall be taken as not greater than the lesser of the values obtained from the following, unless the cross-section under consideration is cracked in flexure, in which case only Item (a) applies:

(a) *Flexure-shear cracking*

$$V_{uc} = \beta_1 \beta_2 \beta_3 b_v d_o \left[\frac{(A_{st} + A_{pt}) f'_c}{b_v d_o} \right]^{1/3} + V_o + P_v$$

where

β_1, β_2, β_3 and A_{st} are as given in Clause 8.2.7.1 except that in determining β_2, N^* is taken as the value of the axial force excluding prestress

V_o = the shear force which would occur at the section when the bending moment at that section was equal to the decompression moment (M_o) given by—

$$M_o = Z\sigma_{cp.f}$$

where

$\sigma_{cp.f}$ = the compressive stress due to prestress, at the extreme fibre where cracking occurs

For simply supported conditions,

$$V_o = M_o / (M^* / V^*)$$

where M^* and V^* are the bending moment and shear force respectively, at the section under consideration, due to the same design loading

For statically indeterminate structures, shear forces and bending moments, due to the secondary effects of prestress, shall be taken into account when determining M_o and V_o.

(b) *Web-shear cracking*

$$V_{uc} = V_t + P_v$$

Accessed by SWINBURNE UNIVERSITY OF TECHNOLOGY on 15 Aug 2007

@Seismicisolation

@Seismicisolation

where

V_t = the shear force, which, in combination with the prestressing force and other action effects at the section, would produce a principal tensile stress of $0.33\sqrt{f'_c}$ at either the centroidal axis or the intersection of flange and web, whichever is the more critical

8.2.7.3 *Secondary effects on V_{uc}*

Where stresses due to secondary effects such as creep, shrinkage and differential temperature are significant, they shall be taken into account in the calculation of V_{uc}.

NOTE: Where significant reversal of loads may occur, causing cracking in a zone usually in compression, the value of V_{uc} obtained from Clause 8.2.7.1 may not apply.

8.2.8 Minimum shear reinforcement

The minimum area of shear reinforcement ($A_{sv.min.}$) provided in a beam shall be given by:

$$A_{sv.min} = 0.35 b_v s / f_{sy.f}$$

8.2.9 Shear strength of a beam with minimum reinforcement

The ultimate shear strength of a beam provided with minimum shear reinforcement ($A_{sv.min}$) shall be taken as —

$$V_{u.min.} = V_{uc} + 0.6 b_v d_o$$

8.2.10 Contribution to shear strength by the shear reinforcement

The contribution to the ultimate shear strength by shear reinforcement in a beam (V_{us}) shall be determined from the following equations:

(a) For perpendicular shear reinforcement:

$$V_{us} = \left(A_{sv} f_{sy.f} d_o / s\right) \cot \theta_v$$

(b) For inclined shear reinforcement:

$$V_{us} = \left(A_{sv} f_{sy.f} d_o / s\right)\left(\sin \alpha_v \cot \theta_v + \cos \alpha_v\right)$$

where, for both Items (a) and (b) —

s = the centre-to-centre spacing of shear reinforcement, measured parallel to the longitudinal axis of the member

θ_v = the angle between the axis of the concrete compression strut and the longitudinal axis of the member, taken conservatively as 45° or, more accurately, to vary linearly from 30° when $V^* = \phi V_{u.min.}$ to 45° when $V^* = \phi V_{u.max.}$

α_v = angle between the inclined shear reinforcement and the longitudinal tensile reinforcement

8.2.11 Suspension reinforcement

If forces are applied to a beam in such a way that hanging action is required, reinforcement or tendons shall be provided to carry all the forces concerned.

8.2.12 Detailing of shear reinforcement

8.2.12.1 *Types*

Shear reinforcement shall comprise one or more of —

(a) stirrups or ties making an angle of between 45° and 90° with the longitudinal bars; and

(b) welded wire mesh placed to have wires perpendicular to the axis of the beam.

Accessed by SWINBURNE UNIVERSITY OF TECHNOLOGY on 15 Aug 2007

@Seismicisolation

@Seismicisolation

8.2.12.2 *Spacing*

Shear reinforcement shall be spaced longitudinally not further apart than 0.5*D* or 300 mm, whichever is less. Where $V^* \leq \phi V_{u.min.}$, the spacing may be increased to 0.75*D* or 500 mm, whichever is less.

The maximum transverse spacing across the width of the member shall not exceed the lesser of 600 mm and *D*.

8.2.12.3 *Extent*

Shear reinforcement, of area not less than that calculated as being necessary at any cross-section, shall be provided for a distance *D* from that cross-section in the direction of decreasing shear. The first fitment at each end of a span shall be positioned not more than 50 mm from the face of the adjacent support.

Shear reinforcement shall extend as close to the compression face and the tension face of the member as cover requirements and the proximity of other reinforcement and tendons will permit.

8.2.12.4 *Anchorage of shear reinforcement*

The anchorage of shear reinforcement transverse to the longitudinal flexural reinforcement may be achieved by hooks, cogs, welding of the transverse bars or welded splices.

NOTE: The type of anchorage used should not induce splitting or spalling of the concrete cover.

Shear reinforcement shall be deemed to be adequately anchored provided the following requirements are met:

(a) Bends in bars used as fitments shall enclose a longitudinal bar with a diameter larger than the diameter of the fitment bar. The enclosed bar shall be in contact with the fitment bend.

(b) A fitment hook should be located preferably in the compression zone of the structural member, where anchorage conditions are most favourable. Such an anchorage is considered satisfactory, if the hook consists of a 135° or 180° bend with a nominal internal diameter of $4d_b$ plus a straight extension of $10d_b$ or 100 mm, whichever is the greater.

(c) Where a fitment hook is located in the tension zone, the anchorage described in Item (b) is deemed to be satisfactory provided the stirrup spacing calculated using Clause 8.2.10 is multiplied by 0.8 and the maximum spacing specified in Clause 8.2.12.2 is also multiplied by 0.8.

(d) Notwithstanding the above, fitment cogs shall not be used when the anchorage of the fitment is solely in the cover concrete of the beam.

8.2.12.5 *End anchorage of mesh*

Where mesh is used as shear reinforcement, the ends shall be anchored—

(a) in accordance with Clause 8.2.12.4, if the wires are bent at least to the dimensions of a standard fitment hook; or

(b) by embedding two or more transverse wires at least 25 mm within the compression zone.

8.3 STRENGTH OF BEAMS IN TORSION

8.3.1 Application

This Clause applies to beams subjected to torsion combined with flexure and shear. It does not apply to non-flexural members covered by Section 12.

Accessed by SWINBURNE UNIVERSITY OF TECHNOLOGY on 15 Aug 2007

@Seismicisolation

@Seismicisolation

8.3.2 Torsion redistribution

Where torsional strength is not required for the equilibrium of the structure and the torsion in a member is induced solely by the angular rotation of adjoining members, it shall be permissible to disregard the torsional stiffness in the analysis and torsion in the member, if the torsion reinforcement requirements of Clauses 8.3.7 and the detailing requirements of Clause 8.3.8 are satisfied.

8.3.3 Torsional strength limited by web crushing

To prevent web crushing under the combined action of torsion and flexural shear, beams shall be proportioned so that the following inequality is satisfied:

$$\frac{T^*}{\phi T_{\text{u.max.}}} + \frac{V^*}{\phi V_{\text{u.max.}}} \leq 1$$

where $\phi V_{\text{u.max.}}$ is calculated from Clause 8.2.6 and —

$$T_{\text{u.max.}} = 0.2\, f_c'\, J_t$$

The torsional modulus (J_t) may be taken as —

= $0.4x^2y$ for solid rectangular sections

= $0.4\Sigma x^2y$ for solid T-, L-, or I-shaped sections, and

= $2A_m b_w$ for thin walled hollow sections, A_m being the area enclosed by the median lines of the walls of a single cell

8.3.4 Requirements for torsional reinforcement

Requirements for torsional reinforcement shall be determined from the following:

(a) Torsional reinforcement is not required if —

(i) $T^* < 0.25\phi T_{uc}$; or

(ii) $$\frac{T^*}{\phi T_{uc}} + \frac{V^*}{\phi V_{uc}} \leq 0.5; \text{ or}$$

(iii) the overall depth does not exceed the greater of 250 mm and half the width of the web, and

$$\frac{T^*}{\phi T_{uc}} + \frac{V^*}{\phi V_{uc}} \leq 1$$

where T_{uc} and V_{uc} are calculated in accordance with Clauses 8.3.5 and 8.2.7 respectively.

Accessed by SWINBURNE UNIVERSITY OF TECHNOLOGY on 15 Aug 2007

@Seismicisolation

@Seismicisolation

(b) If Item (a) above is not satisfied, torsional reinforcement, consisting of transverse closed ties and longitudinal reinforcement shall be provided so that the following inequality is satisfied:

$$\frac{T^*}{\phi T_{us}} + \frac{V^*}{\phi V_{us}} \leq 1$$

where T_{us} is calculated in accordance with Clause 8.3.5, considering all the closed ties provided and V_{us} is calculated in accordance with Clause 8.2.10, considering all the closed and open ties provided.

Longitudinal torsional reinforcement shall comply with Clause 8.3.6 and both transverse and longitudinal torsional reinforcement shall comply with Clause 8.3.7.

8.3.5 Torsional strength of a beam

For the purpose of Clause 8.3.4, the ultimate strength of a beam in pure torsion (T_{uc} or T_{us}) shall be determined from the following:

(a) For a beam without closed ties, the ultimate strength in pure torsion (T_{uc}) shall be calculated from—

$$T_{uc} = J_t \left(0.3\sqrt{f'_c}\right)\sqrt{(1+10\sigma_{cp}/f'_c)}$$

(b) For a beam with closed ties, the ultimate strength in pure torsion (T_{us}) shall be calculated from—

$$T_{us} = f_{sy.f}\left(A_{sw}/s\right)2A_t \cot\theta_t$$

where

A_t = the area of a polygon with vertices at the centre of longitudinal bars at the corners of the cross-section

θ_t = the angle between the axis of the concrete compression strut and the longitudinal axis of the member, taken conservatively as 45° or, more accurately, to vary linearly from 30° when $T^* = \phi T_{uc}$ to 45° when $T^* = \phi T_{u.max.}$

8.3.6 Longitudinal torsional reinforcement

Longitudinal torsional reinforcement shall be provided to resist the following design tensile forces, taken as additional to any design tensile forces due to flexure:

(a) In the flexural tensile zone, a force of—

$$0.5 f_{sy.f}\left(\frac{A_{sw}}{s}\right)u_t \cot^2\theta_t \text{; and}$$

(b) In the flexural compressive zone, a force of—

$$0.5 f_{sy.f}\left(\frac{A_{sw}}{s}\right)u_t \cot^2\theta_t - F_c^* \text{; but not less than zero,}$$

where

u_t = the perimeter of the polygon defined for A_t.

F_c^* = the absolute value of the design force in the compression zone due to flexure

Accessed by SWINBURNE UNIVERSITY OF TECHNOLOGY on 15 Aug 2007

@Seismicisolation

@Seismicisolation

8.3.7 Minimum torsional reinforcement

Where torsional reinforcement is required as specified in Clause 8.3.4—

(a) all of the minimum shear reinforcement required by Clause 8.2.8 shall be provided in the form of closed ties; and

(b) longitudinal torsional reinforcement shall be provided in accordance with Clause 8.3.6.

8.3.8 Detailing of torsional reinforcement

Torsional reinforcement shall be detailed in accordance with the following:

(a) Torsional reinforcement shall consist of both closed ties and longitudinal reinforcement.

(b) The closed ties shall be continuous around all sides of the cross-section and anchored so as to develop full strength at any point, unless a more refined analysis shows that over part of the tie full anchorage is not required. The spacing (s) of the closed ties shall not be greater than the lesser of $0.12u_t$ and 300 mm.

(c) The longitudinal reinforcement shall be placed as close as practicable to the corners of the cross-section, and in all cases at least one longitudinal bar shall be provided at each corner of the closed ties.

8.4 LONGITUDINAL SHEAR IN BEAMS

8.4.1 Application

This Clause applies to the transfer of longitudinal shear forces, across interface shear planes through webs and flanges of composite beams, and across shear planes through flanges cast monolithically.

8.4.2 Design shear force

For the purpose of this Clause, the design longitudinal shear force acting on a shear plane shall be taken as follows:

(a) For a shear plane through a flange, equal to $V^* A_1/A_2$

where

(i) for a flange in compression—

A_1/A_2 = the ratio of the area of flange outstanding beyond the shear plane to the total area of flange;

(ii) for a flange in tension—

A_1/A_2 = the ratio of the area of longitudinal reinforcement in the flange outstanding beyond the shear plane to the total area of longitudinal tensile reinforcement

(b) For a shear plane through the web, equal to V^*.

8.4.3 Design shear strength

The design longitudinal shear strength shall be taken as ϕV_{uf} where—

$$V_{uf} = \beta_4 A_s f_{sy} d/s + \beta_5 b_f d f'_{ct} \leq 0.2 f'_c b_f d$$

Accessed by SWINBURNE UNIVERSITY OF TECHNOLOGY on 15 Aug 2007

@Seismicisolation

@Seismicisolation

where

β_4, β_5 = the shear plane surface coefficients given in Clause 8.4.4

A_s = cross-sectional area of reinforcement anchored each side of the shear plane

f_{sy} = the yield strength of the reinforcement crossing the shear plane

d = effective depth of the composite beam

s = spacing of reinforcement crossing the shear plane

b_f = the width of the shear interface

f'_{ct} = the characteristic principal tensile strength of the concrete

8.4.4 Shear plane surface coefficients

The shear plane surface coefficients, β_4 and β_5, for the surface condition of the shear plane, shall be determined from Table 8.4.4, except that where the beam is subject to high levels of differential shrinkage, temperature effects, tensile stress, or fatigue effects across the shear plane, the value of β_5 should be reduced.

TABLE 8.4.4

SHEAR PLANE SURFACE COEFFICIENTS

Surface condition of the shear plane	Coefficients	
	β_4	β_5
A smooth surface, as obtained by casting against a form, or finished to a similar standard	0.6	0.1
A surface trowelled or tamped, so that the fines have been brought to the top, but where some small ridges, indentations or undulations have been left; slip-formed and vibro-beam screeded; or produced by some form of extrusion technique	0.6	0.2
A surface deliberately roughened — (a) by texturing the concrete to give a pronounced profile; (b) by compacting but leaving a rough surface with coarse aggregate protruding but firmly fixed in the matrix; (c) by spraying when wet, to expose the coarse aggregate without disturbing it; or (d) by providing mechanical shear keys.	0.9	0.4
Monolithic construction	0.9	0.5

8.4.5 Shear plane reinforcement

Where reinforcement is required to increase the longitudinal shear strength, the reinforcement shall consist of shear reinforcement anchored to develop its full strength at the shear plane. Shear and torsional reinforcement already provided, and which crosses the shear plane, may be taken into account for this purpose.

An area of shear reinforcement not less than $0.35 b_f s/f_{sy.f}$ shall be provided.

8.4.6 Minimum thickness of structural components

The average thickness of structural components subject to interface shear shall be not less than 50 mm with a minimum local thickness not less than 30 mm.

Accessed by SWINBURNE UNIVERSITY OF TECHNOLOGY on 15 Aug 2007

@Seismicisolation

@Seismicisolation

8.5 DEFLECTION OF BEAMS

8.5.1 General

The deflection of a beam shall be determined in accordance with Clause 8.5.2 or Clause 8.5.3.

Alternatively, for reinforced beams, the span-to-effective depth ratio shall comply with Clause 8.5.4.

8.5.2 Beam deflection by refined calculation

The calculation of the deflection of a beam by refined calculation shall make allowance for the following:

(a) Shrinkage and creep properties of the concrete.

(b) Expected load history.

(c) Cracking and tension stiffening.

8.5.3 Beam deflection by simplified calculation

8.5.3.1 *Short-term deflection*

The short-term deflections due to external loads and prestressing, which occur immediately on their application, shall be calculated using the value of E_{cj} determined in accordance with Clause 6.1.2 and the value of the effective second moment of area of the member (I_{ef}). This value of I_{ef} may be determined from the values of I_{ef} at nominated cross-sections as follows:

(a) For a simply supported span, the value at midspan.

(b) In a continuous beam—

  (i) for an interior span, half the midspan value plus one quarter of each support value; or

  (ii) for an end span, half the midspan value plus half the value at the continuous support.

(c) For a cantilever, the value at the support.

For the purpose of the above determinations, the value of I_{ef} at each of the cross-sections nominated in Items (a) to (c) above is given by—

$$I_{ef} = I_{cr} + (I - I_{cr})(M_{cr} / M^*_s)^3 \leq I_{e,max.}$$

where

$I_{e,max.}$ = I, for prestressed sections

= I, for reinforced sections when $p = \dfrac{A_{st}}{bd} \geq 0.005$

= 0.6 I, for reinforced sections when $p = \dfrac{A_{st}}{bd} < 0.005$

where

b = width of the cross-section at the compression face

M^*_s = the maximum bending moment at the section, based on the short-term serviceability load or the construction load

M_{cr} = $Z(f'_{cf} - f_{cs} + P / A_g) + Pe \geq 0.0$

where

@Seismicisolation

Accessed by SWINBURNE UNIVERSITY OF TECHNOLOGY on 15 Aug 2007

@Seismicisolation

Z = the section modulus of the uncracked section, referred to the extreme fibre at which cracking occurs

f'_{cf} = the characteristic flexural tensile strength of concrete

f_{cs} = the maximum shrinkage-induced tensile stress on the uncracked section at the extreme fibre at which cracking occurs, and for a singly reinforced section may be taken as

$$= \left(\frac{1.5p}{1+50p} E_s \varepsilon_{cs}\right)$$

p = $(A_{st} + A_{pt})/bd$

ε_{cs} = the design shrinkage strain determined in accordance with Clause 6.1.7

Alternatively, as a further simplification but only for reinforced members, I_{ef} at each nominated cross-section for rectangular sections, may be taken as—

I_{ef} = $(0.02 + 2.5p)bd^3$ when $p \geq 0.005$

I_{ef} = $(0.1–13.5p)bd^3 \leq 0.06\ bd^3$ when $p < 0.005$

8.5.3.2 *Long-term deflection*

For reinforced or prestressed beams, that part of the deflection that occurs after the short-term deflection shall be calculated as the sum of—

(a) the shrinkage component of the long-term deflection, determined from the estimated shrinkage properties of the concrete and the principles of mechanics; and

(b) the additional long-term creep deflections, determined by multiplying the short-term concrete deformations due to loads and prestress by appropriate creep coefficients.

8.5.3.3 *Multiplier method for long-term deflection of reinforced beams*

In the absence of more accurate calculations, the additional long-term deflection of a reinforced beam due to creep and shrinkage may be calculated by multiplying the short-term deflection caused by the sustained load considered, by a multiplier, k_{cs}, given by—

$$k_{cs} = [2 - 1.2(A_{sc} / A_{st})] \geq 0.8$$

where A_{sc}/A_{st} is taken at—

(a) midspan, for a simply supported or continuous beam; or

(b) the support, for a cantilever beam.

8.5.4 Deemed to comply span-to-depth ratios for reinforced beams

For reinforced beams of uniform cross-section, fully propped during construction, subject to uniformly distributed loads only and where the live load (q) does not exceed the dead load (g), beam deflections shall be deemed to comply with the requirements of Clause 2.4.2 if the ratio of effective span to effective depth is not greater than the value given by—

$$L_{ef} / d = \left[\frac{k_1\ (\Delta / L_{ef})\ b_{ef}\ E_c}{k_2\ F_{d.ef}}\right]^{1/3}$$

Accessed by SWINBURNE UNIVERSITY OF TECHNOLOGY on 15 Aug 2007

@Seismicisolation

@Seismicisolation

where

Δ/L_{ef} = the deflection limit selected in accordance with Clause 2.4.2

$F_{d.ef}$ = the effective design load per unit length, taken as—

(a) $(1.0 + k_{cs})g + (\psi_s + k_{cs}\ \psi_l)q$ for total deflection; or

(b) $k_{cs}\ g + (\psi_s + k_{cs}\ \psi_1)q$ for the deflection that occurs after the addition or attachment of the partitions

where

k_{cs} is determined in accordance with Clause 8.5.3.3 and ψ_s and ψ_l are given in AS 1170.1

k_1 = I_{ef}/bd^3, which may be taken as

= $0.02 + 2.5p$ for rectangular sections where $p \geq 0.005$

= $0.1–13.5p \leq 0.06$ for rectangular sections where $p < 0.005$

k_2 = the deflection constant, taken as—

(a) for simply-supported beams, 5/384; or

(b) for continuous beams, where in adjacent spans the ratio of the longer span to the shorter span does not exceed 1.2 and where no end span is longer than an interior span—

(i) 2.4/384 in an end span; or

(ii) 1.5/384 in interior spans

8.6 CRACK CONTROL OF BEAMS

8.6.1 Crack control for tension and flexure in reinforced beams

For the purpose of this Clause the following apply:

(a) The resultant action is considered to be *primarily tension* when the whole of the section is in tension, or *primarily flexure* when the tensile stress distribution within the section prior to cracking is triangular with some part of the section in compression.

(b) A critical tensile zone of a beam subject to flexure is defined as a region where the design bending moment at serviceability limit state ($M^*_{s.1}$) calculated with short-term load factor $\psi_s = 1.0$ (see Note 1), equals or exceeds the critical moment for flexural cracking (M_{crit}), which is calculated assuming a flexural tensile strength of concrete equal to 3.0 MPa.

(c) Where the main reinforcement has different yield strengths, the yield strength (f_{sy}) shall be taken as the lowest yield strength of any of the reinforcement.

Cracking in reinforced beams subjected to tension, flexure with tension, or flexure, shall be deemed to be controlled if the appropriate requirements in Items (i) and (ii), and either Item (iii) for beams primarily in tension or Item (iv) for beams primarily in flexure, are satisfied. For regions of beams fully enclosed within a building except for a brief period of weather exposure during construction, and where it is assessed that wider cracks can be tolerated, only Item (ii) need be satisfied.

(i) The minimum area of reinforcement ($A_{st.min}$) in a beam primarily subject to tension, or in a critical tensile zone of a beam primarily subject to flexure shall be—

$$A_{st.min.} = 3k_s A_{ct} / f_s$$

Accessed by SWINBURNE UNIVERSITY OF TECHNOLOGY on 15 Aug 2007

@Seismicisolation

@Seismicisolation

where

k_s = a coefficient that takes into account the shape of the stress distribution within the section immediately prior to cracking, as well as the effect of non-uniform self-equilibrating stresses, and equals 0.8 for tension and 0.6 for flexure

A_{ct} = the area of concrete in the tensile zone, being that part of the section in tension assuming the section is uncracked

f_s = the maximum tensile stress permitted in the reinforcement immediately after formation of a crack, which shall be the lesser of the yield strength of the reinforcement f_{sy} and the maximum steel stress given in Table 8.6.1(A) for the largest nominal diameter, d_b, of the bars in the section

(ii) The distance from the side or soffit of a beam to the centre of the nearest longitudinal bar shall not exceed 100 mm. Bars with a diameter less than half the diameter of the largest bar in the section shall be ignored. The centre-to-centre spacing of bars near a tension face of the beam shall not exceed 300 mm. For T-beams and L-beams, the reinforcement required in the flange shall be distributed across the effective width.

(iii) For beams primarily subject to tension, the calculated steel stress (f_{scr}) shall not exceed the maximum steel stress given in Table 8.6.1(A) for the largest nominal diameter (d_b) of the bars in the section, and under direct loading the calculated steel stress ($f_{scr.1}$) shall not exceed $0.8f_{sy}$.

(iv) For beams primarily subject to flexure, the calculated steel stress (f_{scr}) shall not exceed the maximum steel stress given in Table 8.6.1(A) for the largest nominal diameter (d_b), of the bars in the tensile zone, and under direct loading the calculated steel stress ($f_{scr.1}$) shall not exceed $0.8f_{sy}$. Alternatively, the calculated steel stress (f_{scr}) shall not exceed the maximum steel stress given in Table 8.6.1(B) for the largest centre-to-centre spacing of adjacent parallel bars in the tensile zone (see Note 2), and under direct loading the calculated steel stress $f_{scr.1}$ shall not exceed $0.8f_{sy}$. Bars with a diameter less than half the diameter of the largest bar in the section shall be ignored when determining spacing.

NOTES:

1 Design bending moments M^*_s and $M^*_{s.1}$ at the serviceability limit state will normally be estimated using elastic analysis. Inaccurate estimates may be obtained if they are determined from the design bending moments M^* at the strength limit state when the amount of moment redistribution is unknown; for example, if plastic methods of analysis are used for strength design.

2 If comparing the calculated steel stress (f_{scr}) with the maximum steel stresses determined from Tables 8.6.1(A) and 8.6.1(B) depending on the bar diameter and bar spacing, respectively, the greater of these two maximum steel stresses may be used.

Accessed by SWINBURNE UNIVERSITY OF TECHNOLOGY on 15 Aug 2007

@Seismicisolation

@Seismicisolation

TABLE 8.6.1(A)

MAXIMUM STEEL STRESS FOR TENSION OR FLEXURE IN BEAMS

Nominal bar diameter (d_b), mm	Maximum steel stress, MPa
10	360
12	330
16	280
20	240
24	210
28	185
32	160
36	140
40	120

NOTE: Values for other bar diameters may be calculated using the equation:
Maximum steel stress = $-173 \log_e (d_b) + 760$ MPa.

TABLE 8.6.1(B)

MAXIMUM STEEL STRESS FOR FLEXURE IN BEAMS

Centre-to-centre spacing, mm	Maximum steel stress, MPa
50	360
100	320
150	280
200	240
250	200
300	160

NOTE: Intermediate values may be calculated using the equation:
Maximum steel stress = $-0.8 \times$ centre-centre spacing + 400 MPa.

8.6.2 Crack control for flexure in prestressed beams

Flexural cracking, in a prestressed beam, shall be deemed to be controlled if, under the short-term service loads, the resulting maximum tensile stress in the concrete does not exceed $0.25\sqrt{f_c'}$ or, if this stress is exceeded, by providing reinforcement or bonded tendons, or both, near the tensile face and limiting either—

(a) the calculated maximum flexural tensile stress under short term service loads to $0.6\sqrt{f_c'}$; or

(b) both—

(i) the increment in steel stress near the tension face to 200 MPa, as the load increases from its value when the extreme concrete tensile fibre is at zero stress to the short-term service load value; and

(ii) the centre-to-centre spacing of reinforcement, including bonded tendons, to 200 mm.

8.6.3 Crack control in the side face of beams

For crack control in the side face of beams where the overall depth exceeds 750 mm, longitudinal reinforcement, consisting of 12 mm bars at 200 mm centres, or 16 mm bars at 300 mm centres, shall be placed in each side face.

Accessed by SWINBURNE UNIVERSITY OF TECHNOLOGY on 15 Aug 2007

@Seismicisolation

@Seismicisolation

8.6.4 Crack control at openings and discontinuities

Reinforcement shall be provided for crack control at openings and discontinuities in a beam.

8.7 VIBRATION OF BEAMS

Vibration of beams shall be considered and appropriate action taken where necessary to ensure that the vibrations induced by machinery, or vehicular or pedestrian traffic, will not adversely affect the serviceability of the structure.

8.8 T-BEAMS AND L-BEAMS

8.8.1 General

Where a slab is assumed to provide the flange of a T-beam or L-beam, the longitudinal shear capacity of the flange-web connection shall be checked in accordance with Clause 8.4.

For isolated T-beams or L-beams, the shear strength of the slab flange on vertical sections parallel to the beam shall also be checked in accordance with Clause 8.2.

8.8.2 Effective width of flange for strength and serviceability

In the absence of a more accurate determination, the effective width of the flange of a T-beam or L-beam for strength and serviceability shall be taken as—

(a) T-beams ..... $b_{ef} = b_w + 0.2a$; and

(b) L-beams ..... $b_{ef} = b_w + 0.1a$

where a is the distance between points of zero bending moment, which for continuous beams, may be taken as $0.7L$.

In both Items (a) and (b) above, the overhanging part of the flange considered effective shall not exceed half the clear distance to the next member. The effective width so determined may be taken as constant over the entire span.

8.9 SLENDERNESS LIMITS FOR BEAMS

8.9.1 General

Unless a stability analysis is carried out, beams shall comply with the limits specified in Clauses 8.9.2 to 8.9.4, as appropriate.

8.9.2 Simply supported and continuous beams

For a simply supported or continuous beam, the distance L_l between points at which lateral restraint is provided shall be such that L_l/b_{ef} does not exceed the lesser of $180b_{ef}/D$ and 60.

8.9.3 Cantilever beams

For a cantilever beam having lateral restraint only at the support, the ratio of the clear projection L_n to the width, b_{ef}, at the support shall be such that L_n/b_{ef} does not exceed the lesser of $100b_{ef}/D$ and 25.

8.9.4 Reinforcement for slender prestressed beams

For a prestressed beam in which L_l/b_{ef} exceeds 30, or for a prestressed cantilever beam in which L_n/b_{ef} exceeds 12, the following reinforcement shall be provided:

(a) Stirrups providing a steel area, A_{sv}, in accordance with Clause 8.2.8.

(b) Additional longitudinal reinforcement, consisting of at least one bar in each corner of the compression face, such that—

$$A_{sc} \geq 0.35A_{pt}f_{pt}/f_{sy}$$

@Seismicisolation

Accessed by SWINBURNE UNIVERSITY OF TECHNOLOGY on 15 Aug 2007

@Seismicisolation

SECTION 9 DESIGN OF SLABS FOR STRENGTH AND SERVICEABILITY

9.1 STRENGTH OF SLABS IN BENDING

9.1.1 General

The strength of a slab in bending shall be determined in accordance with Clauses 8.1.1 to 8.1.6 except that for two-way reinforced slabs, the minimum strength requirements of Clause 8.1.4.1 shall be deemed to be satisfied by providing minimum tensile reinforcement such that A_{st}/bd is not less than one of the following:

(a) Slabs supported by columns .....0.0025.

(b) Slabs supported by beams or walls.....0.002.

(c) Slab footings .....0.002.

9.1.2 Reinforcement and tendon distribution in two-way flat slabs

In two-way flat slabs, at least 25% of the total of the design negative moment in a column-strip and adjacent half middle-strips shall be resisted by reinforcement or tendons or both, located in a cross-section of slab centred on the column and of a width equal to twice the overall depth of the slab or drop panel plus the width of the column.

9.1.3 Detailing of tensile reinforcement in slabs

9.1.3.1 *General procedure for arrangement*

Tensile reinforcement shall be arranged in accordance with the following as appropriate:

(a) Where the bending moment envelope has been calculated, the termination and anchorage of flexural reinforcement shall be based on a hypothetical bending-moment diagram formed by displacing the calculated positive and negative bending-moment envelopes a distance D along the slab from each side of the relevant sections of maximum moment. Nevertheless, the following shall apply:

(i) Not less than one-third of the total negative moment reinforcement required at a support shall be extended a distance $12d_b$ or D, whichever is greater, beyond the point of contraflexure.

(ii) At a simply supported discontinuous end of a slab, not less than one-half of the total positive moment reinforcement required at midspan shall be anchored by extension past the face of the support for a distance of $12d_b$ or D, whichever is greater, or by an equivalent anchorage.

Where no shear reinforcement is required in accordance with Clause 8.2.5 or Clause 9.2, the extension of the midspan positive moment reinforcement past the face of the support may be reduced to $8d_b$ if at least one-half of the reinforcement is so extended, or to $4d_b$ if all the reinforcement is so extended.

(iii) At a support where the slab is continuous or flexurally restrained, not less than one-quarter of the total positive moment reinforcement required at midspan shall continue past the near face of the support.

(iv) Where frames incorporating slabs are intended to resist lateral loading, the effects of such loading on the arrangement of the slab reinforcement shall be taken into account but in no case shall the lengths of reinforcement be made less than those shown in Figures 9.1.3.2 and 9.1.3.4, as appropriate.

(b) Where the bending moment envelope has not been calculated, the requirements of Clauses 9.1.3.2. to 9.1.3.4, as appropriate to the type of slab, shall be satisfied.

Accessed by SWINBURNE UNIVERSITY OF TECHNOLOGY on 15 Aug 2007

@Seismicisolation

@Seismicisolation

9.1.3.2 *Deemed-to-comply arrangement for one-way slabs*

For one-way slabs continuous over two or more spans where—

(a) the ratio of the longer to the shorter of any two adjacent spans does not exceed 1.2; and

(b) the live loads may be assumed to be uniformly distributed and the live load (q) is not greater than twice the dead load (g),

the arrangement of tensile reinforcement shown in Figure 9.1.3.2 shall be deemed to comply with Clause 9.1.3.1(a).

Where adjacent spans are unequal, the extension of negative moment reinforcement beyond each face of the common support shall be based on the longer span.

For one-way slabs of single span, the arrangement of tensile reinforcement shown in Figure 9.1.3.2, for the appropriate end support conditions shall be deemed to comply with Clause 9.1.3.1(a).

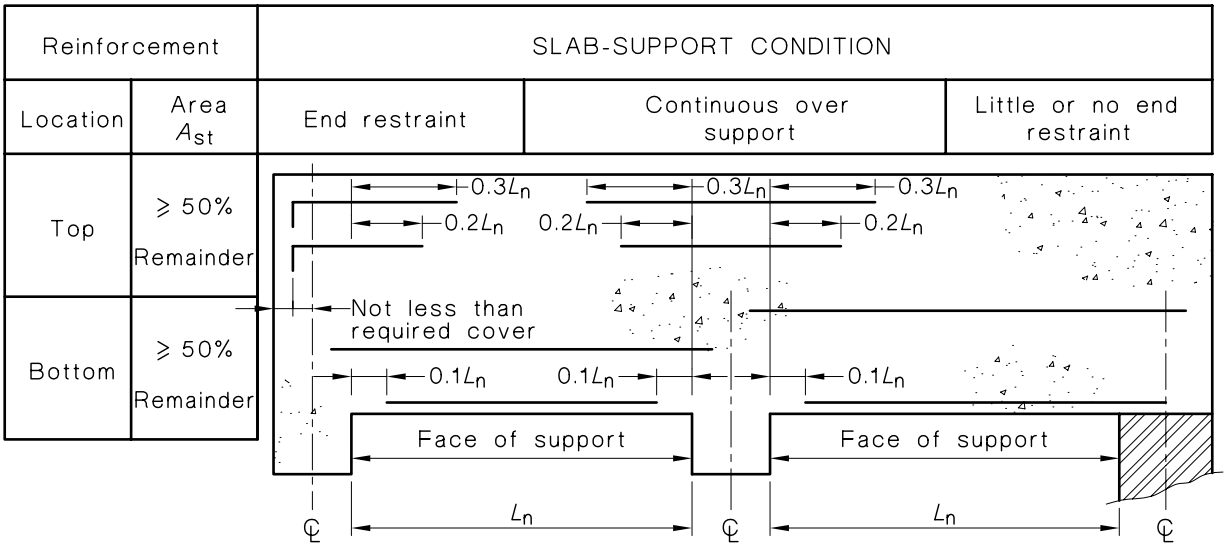

FIGURE 9.1.3.2 ARRANGEMENT OF REINFORCEMENT

9.1.3.3 *Deemed-to-comply arrangement for two-way slabs supported on beams or walls*

For two-way simply supported or continuous rectangular slabs supported by walls or beams on four sides, the arrangement of tensile reinforcement, shown in Figure 9.1.3.2 and further prescribed herein, shall be deemed to comply with Clause 9.1.3.1(a).

The arrangement shall apply to each direction.

Where a simply supported or continuous slab is not square, the arrangement shall be based on the span (L_n) taken as the shorter span.

Where adjacent continuous rectangular slabs have unequal shorter spans, the extension of negative moment reinforcement beyond each face of a common support shall be based on the span (L_n) taken as the longer of the shorter spans.

Negative moment reinforcement provided at a discontinuous edge shall extend from the face of the support into the span for a distance of 0.15 times the shorter span.

At an exterior corner of a two-way rectangular slab supported on four sides and restrained against uplift, reinforcement shall be provided in both the top and the bottom of the slab.

@Seismicisolation

Accessed by SWINBURNE UNIVERSITY OF TECHNOLOGY on 15 Aug 2007

@Seismicisolation

This reinforcement shall consist of two layers perpendicular to the edges of the slab and extend from each edge for a distance not less than 0.2 times the shorter span. The area of the reinforcement in each of the four layers shall be not less than—

(a) for corners where neither edge is continuous ..... 0.75 A_{st}; and

(b) for corners where one edge is continuous ..... 0.5 A_{st},

where A_{st} is the area of the maximum positive moment reinforcement required at midspan.

Any reinforcement provided may be considered as part of this reinforcement.

9.1.3.4 *Deemed-to-comply arrangement for two-way flat slabs*

For multispan, reinforced, two-way flat slabs, the arrangement of tensile reinforcement, shown in Figure 9.1.3.4 and further prescribed herein, shall be deemed to comply with Clause 9.1.3.1(a).

Where adjacent spans are unequal, the extension of negative moment reinforcement beyond each face of the common support shall be based on the longer span.

All slab reinforcement perpendicular to a discontinuous edge shall be extended (straight, bent or otherwise) past the internal face of the spandrel, wall or column for a length—

(a) *for positive moment reinforcement*, not less than 150 mm except that it shall extend to the edge of the slab if there is no spandrel beam or wall; and

(b) *for negative moment reinforcement*, such that the calculated force is developed at the internal face in accordance with Clause 13.1.

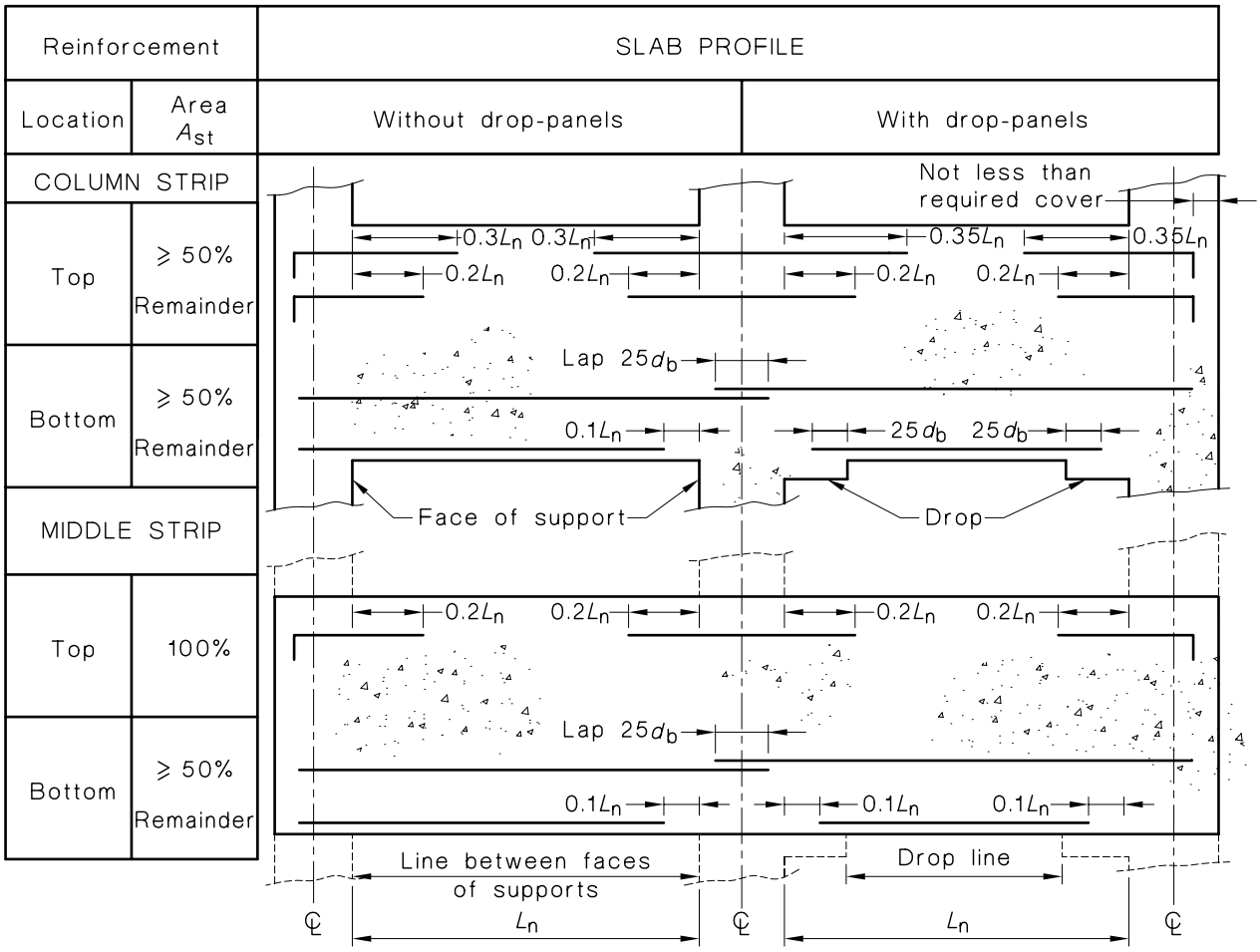

FIGURE 9.1.3.4 ARRANGEMENT OF REINFORCEMENT

Accessed by SWINBURNE UNIVERSITY OF TECHNOLOGY on 15 Aug 2007

@Seismicisolation

@Seismicisolation

9.1.4 Spacing of reinforcement and tendons

The minimum clear distance between parallel bars (including bundled bars), ducts and tendons shall be such that the concrete can be properly placed and compacted in accordance with Clause 19.1.3.

The maximum spacing of reinforcement and tendons shall be determined in accordance with Clause 9.4.

9.2 STRENGTH OF SLABS IN SHEAR

9.2.1 General

For the purpose of this Clause, the following definitions and symbols apply to flat slabs:

9.2.1.1 *Critical shear perimeter*

The perimeter defined by a line geometrically similar to the boundary of the effective area of a support or concentrated load and located at a distance of $d_{om}/2$ therefrom (see Figure 9.2.1(A)).

9.2.1.2 *Critical opening*

Any opening through the thickness of a slab where an edge, or part of the edge, of the opening is located at a clear distance of less than $2.5b_o$ from the critical shear perimeter (see Figure 9.2.1(A)).

9.2.1.3 *Effective area of a support or concentrated load*

The area totally enclosing the actual support or load and for which the perimeter is a minimum (see Figure 9.2.1(A)).

9.2.1.4 *Torsion strip*

A strip of slab of width a, whose longitudinal axis is perpendicular to the direction of M^*_v (see Figure 9.2.1(B)).

a = the dimension of the critical shear perimeter measured parallel to the direction of M^*_v (see Figure 9.2.1(B))

b_o = the dimension of an opening (see Figure 9.2.1(A))

b_w = the width of the web of a spandrel beam (see Figure 9.2.1(B))

D_b = the overall depth of a spandrel beam (see Figure 9.2.6)

D_s = the overall depth of a slab or drop panel as appropriate

d_{om} = the mean value of d_o, averaged around the critical shear perimeter

M^*_v = the bending moment transferred from the slab to a support in the direction being considered (see Figure 9.2.1(B))

u = the length of the critical shear perimeter (see Figure 9.2.1(A))

y_1 = the larger overall dimension of a closed tie (see Figure 9.2.6)

β_h = the ratio of the longest overall dimension of the effective loaded area, Y, to the overall dimension, X, measured perpendicular to Y (see Figure 9.2.1(A)).

9.2.2 Application

The strength of a slab in shear shall be determined in accordance with the following:

(a) Where shear failure can occur across the width of the slab, the design shear strength of the slab shall be calculated in accordance with Clause 8.2.

Accessed by SWINBURNE UNIVERSITY OF TECHNOLOGY on 15 Aug 2007

@Seismicisolation

@Seismicisolation

(b) Where shear failure can occur locally around a support or concentrated load, the design shear strength of the slab shall be taken as ϕV_u, where V_u is calculated in accordance with one of the following, as appropriate:

(i) Where M^*_v is zero, V_u is taken as equal to V_{uo} calculated in accordance with Clause 9.2.3.

(ii) Where M^*_v is not zero, V_u is calculated in accordance with Clause 9.2.4.

9.2.3 Ultimate shear strength where M^*_v is zero

The ultimate shear strength of a slab where M^*_v is zero, V_{uo}, is given by either—

(a) where there is no shear head—

$$V_{uo} = ud_{om}\left(f_{cv} + 0.3\sigma_{cp}\right)$$

where

$$f_{cv} = 0.17\left(1 + \frac{2}{\beta_h}\right)\sqrt{f'_c} \le 0.34\sqrt{f'_c}\text{; or}$$

(b) where there is a shear head—

$$V_{uo} = ud_{om}(0.5\sqrt{f'_c} + 0.3\sigma_{cp}) \le 0.2ud_{om}f'_c$$

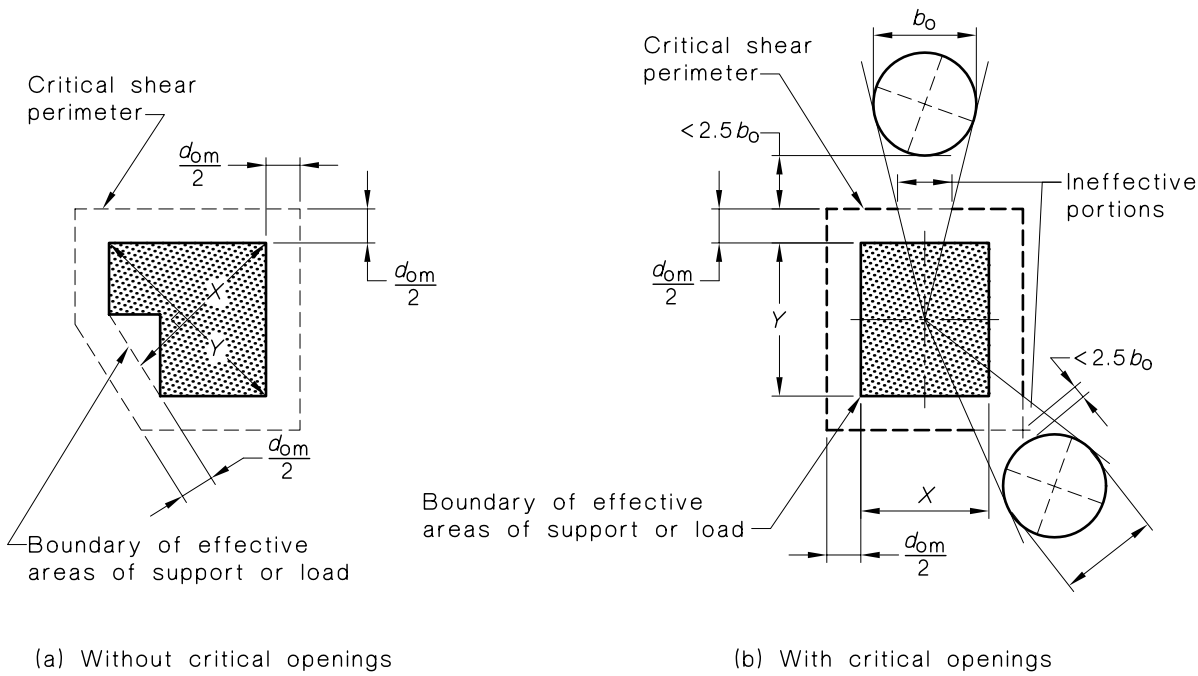

FIGURE 9.2.1(A) CRITICAL SHEAR PERIMETER

Accessed by SWINBURNE UNIVERSITY OF TECHNOLOGY on 15 Aug 2007

@Seismicisolation

@Seismicisolation

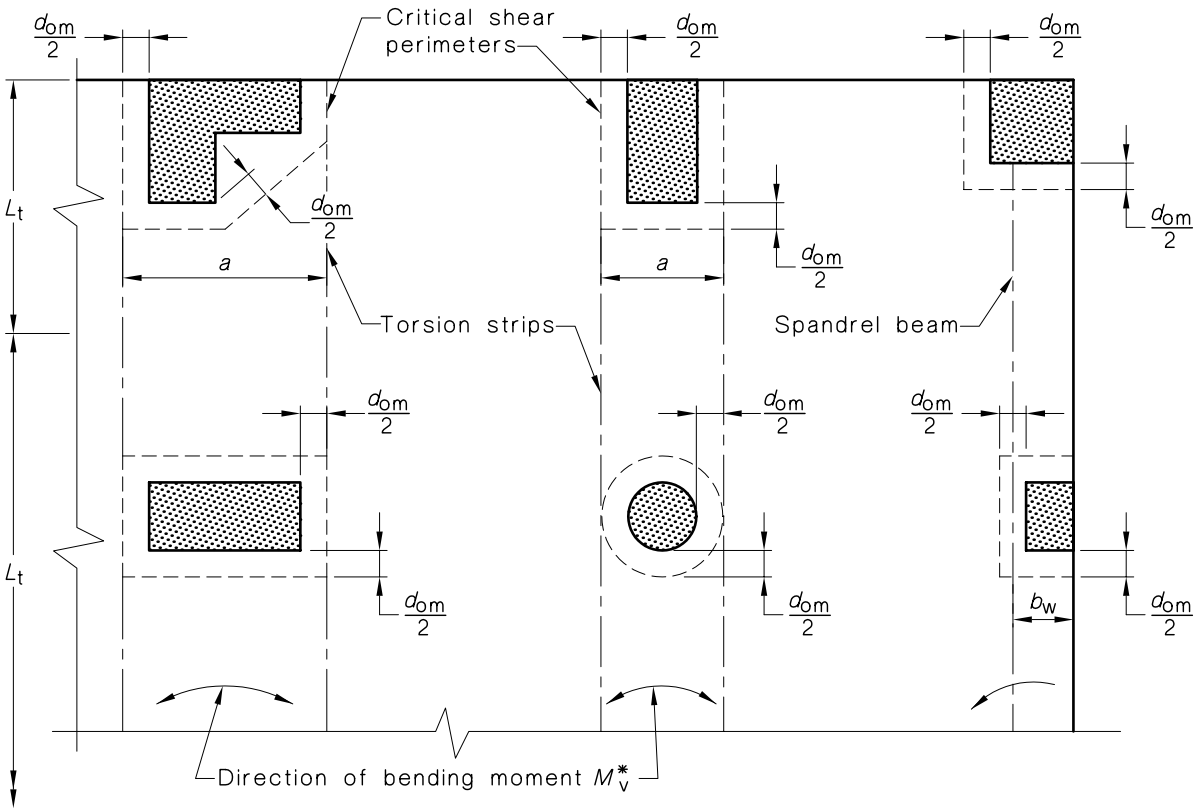

FIGURE 9.2.1(B) TORSION STRIPS AND SPANDREL BEAMS

9.2.4 Ultimate shear strength where M^*_v is not zero

Where M^*_v is not zero and shear reinforcement, if provided, complies with Clauses 9.2.5 and 9.2.6, then V_u shall be determined from one of the following:

(a) If there are no closed ties in the torsion strip or spandrel beams, V_u is given by—

$$V_u = V_{uo} / [\ 1.0+(uM^*_v/8V^*ad_{om})\ ]$$

(b) If the torsion strip contains the minimum quantity of closed ties, V_u shall be taken as $V_{u.min.}$ given by—

$$V_{u.min.} = 1.2V_{uo} / [\ 1.0 + (uM^*v / 2V^*a^2)\ ]$$

(c) If there are spandrel beams perpendicular to the direction of M^*_v which contain the minimum quantity of closed ties, V_u shall be taken as $V_{u.min}$ given by—

$$V_{u.min.} = 1.2V_{uo}\,(D_b / D_s)\ [1.0+(uM^*_v / 2V^*ab_w)]$$

(d) If the torsion strip or spandrel beam, contains more than the minimum quantity of closed ties, V_u is given by—

$$V_u = V_{u.min.}\sqrt{[(A_{sw} / s)/(0.2\,y_1 / f_{sy.f})]}$$

where $V_{u.min.}$ is calculated in accordance with Item (b) or (c), as appropriate.

In no case shall V_u be taken greater than $V_{u.max.}$ given by—

$$V_{u.max.} = 3V_{u.min.}\sqrt{(x / y)}$$

where x and y are the shorter and longer dimensions respectively of the cross-section of the torsion strip or spandrel beam.

Accessed by SWINBURNE UNIVERSITY OF TECHNOLOGY on 15 Aug 2007

@Seismicisolation

@Seismicisolation

9.2.5 Minimum area of closed ties

The minimum cross-sectional area of the reinforcement forming the closed ties shall satisfy the following inequality:

$$A_{sw} / s \geq 0.2 y_1 / f_{sy.f}$$

9.2.6 Detailing of shear reinforcement

Reinforcement for slab shear in torsion strips and spandrel beams shall be in the form of closed ties arranged and detailed in accordance with the following:

(a) The ties shall extend along the torsion strip or spandrel beam for a distance not less than $L_t/4$ from the face of the support or concentrated load, on one or both sides of the centroid axis, as applicable. The first tie shall be located at not more than 0.5*s* from the face of the support.

(b) The spacing (*s*) of the ties shall not exceed the greater of 300 mm and, D_b or D_s, as applicable.

(c) At least one longitudinal bar shall be provided at each corner of the tie.

(d) The dimensions of the ties are as shown in Figure 9.2.6.

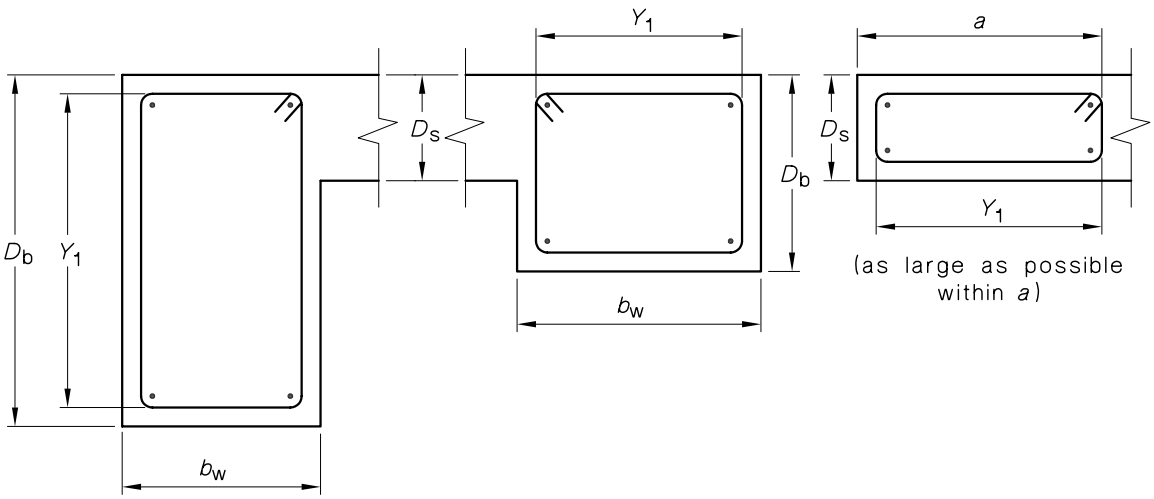

FIGURE 9.2.6 PARAMETERS AND DETAILS OF SHEAR REINFORCEMENT FOR SLABS

9.3 DEFLECTION OF SLABS

9.3.1 General

The deflection of a slab shall be determined in accordance with Clause 9.3.2 or Clause 9.3.3.

Alternatively, for reinforced slabs, the span-to-depth ratio of the slab shall comply with Clause 9.3.4.

9.3.2 Slab deflection by refined calculation

The calculation of the deflection of a slab by refined calculation shall make allowance for the following:

(a) Two-way action.

(b) Shrinkage and creep properties of the concrete.

(c) Expected load history.

Accessed by SWINBURNE UNIVERSITY OF TECHNOLOGY on 15 Aug 2007

@Seismicisolation

@Seismicisolation

(d) Cracking and tension stiffening.

(e) Deflection of formwork or settlement of props during construction when the slab formwork is supported off suspended floors below.

9.3.3 Slab deflection by simplified calculation

The deflection of a slab subject to uniformly distributed loads shall be calculated in accordance with Clause 8.5.3 on the basis of an equivalent beam taken as follows:

(a) For a one-way slab, a prismatic beam of unit width.

(b) For a rectangular slab supported on four sides, a prismatic beam of unit width through the centre of the slab, spanning in the short direction L_x, with the same conditions of continuity as the slab in that direction and with the load distributed so that the proportion of load carried by the beam is given by—

$$L_y^{\ 4} / \left(aL_x^{\ 4} + L_y^{\ 4}\right)$$

where α is given in Table 9.3.3 for the appropriate slab-edge condition.

(c) For a two-way flat slab having multiple spans (for deflections along the centreline of the supports), the design strips of the idealized frame described in Clause 7.5.2.

TABLE 9.3.3

COEFFICIENT OF PROPORTIONALITY (α)

	Edge condition	Coefficient (α)
1	Four edges continuous	1.0
2	One short edge discontinuous	0.5
3	One long edge discontinuous	2.0
4	Two short edges discontinuous	0.2
5	Two long edges discontinuous	5.0
6	Two adjacent edges discontinuous	1.0
7	Three edges discontinuous (one long edge continuous)	0.4
8	Three edges discontinuous (one short edge continuous)	2.5
9	Four edges discontinuous	1.0

9.3.4 Deemed to comply span-to-depth ratio for reinforced slabs

9.3.4.1 *One-way slabs and two-way flat slabs*

For a reinforced one-way slab, or a multiple-span reinforced two-way flat slab of essentially uniform depth, fully propped during construction, subject to uniformly distributed loads and where the live load (q) does not exceed the dead load (g), slab deflections shall be deemed to comply with the requirements of Clause 2.4.2 if the ratio of the effective span to the effective depth is not greater than the value given by—

$$L_{ef} / d = k_3 k_4 \left[\frac{(\Delta / L_{ef}) E_c}{F_{d.ef}} \right]^{1/3}$$

where

Δ / L_{ef} = the deflection limit selected in accordance with Clause 2.4.2 and the deflection (Δ) is taken on the centre-line between the supports used

Accessed by SWINBURNE UNIVERSITY OF TECHNOLOGY on 15 Aug 2007

@Seismicisolation

@Seismicisolation

to calculate L_{ef}

L_{ef} = the effective span

$F_{d.ef}$ = the effective design load, per unit area, taken as—

(a) $(1.0 + k_{cs})g + (\psi_s + k_{cs}\psi_l)q$, for total deflection; or

(b) $k_{cs}\, g + (\psi_s + k_{cs}\psi_l)q$, for the deflection that occurs after the addition or attachment of the partitions

where

k_{cs} is determined in accordance with Clause 8.5.3.3 and ψ_s and ψ_l are given in AS 1170.1

k_3 = 1.0 for a one-way slab

= 0.95 for a two-way flat slab without drop panels

= 1.05 for a two-way flat slab with drop panels, which extend at least $L/6$ in each direction on each side of a support centre-line and have an overall depth not less than 1.3 D, where D is the slab thickness beyond the drops

k_4 = the deflection constant, which may be taken as—

(a) for simply supported slabs, 1.6; or

(b) for continuous slabs, where in adjoining spans the ratio of the longer span to the shorter span does not exceed 1.2 and where no end span is longer than an interior span—

(i) 2.0 in an end span; or

(ii) 2.4 in interior spans

9.3.4.2 *Rectangular slabs supported on four sides*

For a reinforced concrete slab, supported on four sides by walls or beams, subject to uniformly distributed loads and where the live load (q) does not exceed the dead load (g) the slab deflection shall be deemed to comply with the requirements of Clause 2.4.2 if the ratio of the shorter effective span to the effective depth satisfies the requirements given in Clause 9.3.4.1, except that—

(a) k_3 shall be taken as 1.0; and

(b) the appropriate value of k_4 shall be taken from Table 9.3.4.2.

Accessed by SWINBURNE UNIVERSITY OF TECHNOLOGY on 15 Aug 2007

@Seismicisolation

@Seismicisolation

TABLE 9.3.4.2

SLAB-SYSTEM MULTIPLIER (k_4) FOR RECTANGULAR SLABS SUPPORTED ON FOUR SIDES

Edge condition	Deflection constant (k_4)			
	Ratio of long to short side (L_y/L_x)			
	1.0	1.25	1.5	2.0
1 Four edges continuous	4.00	3.40	3.10	2.75
2 One short edge discontinuous	3.75	3.25	3.00	2.70
3 One long edge discontinuous	3.75	2.95	2.65	2.30
4 Two short edges discontinuous	3.55	3.15	2.90	2.65
5 Two long edges discontinuous	3.55	2.75	2.25	1.80
6 Two adjacent edges discontinuous	3.25	2.75	2.50	2.20
7 Three edges discontinuous (one long edge continuous)	3.00	2.55	2.40	2.15
8 Three edges discontinuous (one short edge continuous)	3.00	2.35	2.10	1.75
9 Four edges discontinuous	2.50	2.10	1.90	1.70

9.4 CRACK CONTROL OF SLABS

9.4.1 Crack control for flexure in reinforced slabs

For the purpose of this Clause the following apply:

(a) A critical tensile zone is defined as a region of a slab where the design bending moment at the serviceability limit state ($M^*_{s.1}$) calculated with short-term load factor $\psi_s = 1.0$ (see Note 1), equals or exceeds the critical moment for flexural cracking (M_{crit}), which is calculated assuming a flexural tensile strength of concrete equal to 3.0 MPa.

(b) In cases when the main reinforcement has different yield strengths, the yield strength (f_{sy}) shall be taken as the lowest yield strength of any of the reinforcement.

Cracking in reinforced slabs subject to flexure shall be deemed to be controlled if the appropriate requirements in Items (i), (ii), (iii), (iv) and (v) are satisfied. For areas of slabs fully enclosed within a building except for a brief period of weather exposure during construction and, where it is assessed that wider cracks can be tolerated, only Item (i) and Item (iii) need be satisfied.

(i) The minimum area of reinforcement in a tensile zone of a slab shall comply with Clause 9.1.1.

(ii) In a critical tensile zone, the minimum area of reinforcement ($A_{st.min.}$) shall not be less than—

$$A_{st.min.} = 3k_s A_{ct} / f_s$$

where

k_s = a coefficient that takes into account the shape of the stress distribution within the section immediately prior to cracking, as well as the effect of non-uniform self-equilibrating stresses, and equals 0.6

A_{ct} = the area of concrete in the tensile zone, being that part of the section in tension assuming the section is uncracked

f_s = the maximum tensile stress permitted in the reinforcement immediately after formation of a crack, which shall be the lesser of the yield strength of the reinforcement (f_{sy}) and the maximum steel stress given in Table 9.4.1(A) for the largest nominal diameter (d_b) of the bars in the section.

Accessed by SWINBURNE UNIVERSITY OF TECHNOLOGY on 15 Aug 2007

@Seismicisolation

@Seismicisolation

(iii) The centre-to-centre spacing of bars in each direction shall not exceed the lesser of $2.0D_s$ or 300 mm. Bars with a diameter less than half the diameter of the largest bar in the cross-section shall be ignored.

(iv) The calculated steel stress (f_{scr}) shall not exceed the maximum steel stress given in Table 9.4.1(A) for the largest nominal diameter (d_b) of the bars in the tensile zone. Alternatively, the calculated steel stress (f_{scr}) shall not exceed the maximum steel stress determined from Table 9.4.1(B) for the largest centre-to-centre spacing of adjacent parallel bars in the tensile zone (see Note 2). Bars with a diameter less than half the diameter of the largest bar in the section shall be ignored when determining spacing.

(v) The calculated steel stress $f_{scr.1}$ shall not exceed $0.8f_{sy}$.

NOTES:

1 Design bending moments M^*_s and $M^*_{s.1}$ at the serviceability limit state will normally be estimated using elastic analysis. Inaccurate estimates may be obtained if they are determined from the design bending moments M^* at the strength limit state when the amount of moment redistribution is unknown; for example, if plastic methods of analysis are used for strength design.

2 If comparing the calculated steel stress (f_{scr}) with the maximum steel stresses determined from Tables 9.4.1(A) and 9.4.1(B) depending on the bar diameter and bar spacing, respectively, the greater of these two maximum steel stresses may be used.

TABLE 9.4.1(A)

MAXIMUM STEEL STRESS FOR FLEXURE IN SLABS

Nominal bar diameter (d_b) mm	Maximum steel stress (MPa) for overall depth, D_s (mm) of:	
	≤ 300	> 300
6	375	450
8	345	400
10	320	360
12	300	330
16	265	280
20	240	
24	210	

NOTE: Values for other bar diameters may be calculated using the appropriate equation, as follows:
Maximum steel stress equals

$-173\log_e(d_b) + 760$ MPa for $d_b \geq 20$ mm

$-173\log_e(d_b) + 760$ MPa for $d_b < 20$ mm and $D_s > 300$ mm

$-114\log_e(d_b) + 580$ MPa for $d_b < 20$ mm and $D_s \leq 300$ mm

Accessed by SWINBURNE UNIVERSITY OF TECHNOLOGY on 15 Aug 2007

@Seismicisolation

@Seismicisolation

TABLE 9.4.1(B)

MAXIMUM STEEL STRESS FOR FLEXURE IN SLABS

Centre-to-centre spacing (mm)	Maximum steel stress (MPa)
50	360
100	320
150	280
200	240
250	200
300	160

NOTE: Intermediate values may be calculated using the equation:
Maximum steel stress = −0.8 × centre-to-centre spacing + 400 MPa

9.4.2 Crack control for flexure in prestressed slabs

Flexural cracking in a prestressed slab shall be deemed to be controlled if under the short-term service loads, the resulting maximum tensile stress in the concrete does not exceed $0.25\sqrt{f'_c}$ or, if this stress is exceeded, by providing reinforcement or bonded tendons near the tensile face and limiting—

(a) either the calculated maximum flexural tensile stress in the concrete under short-term service load to $0.5\sqrt{f'_c}$; or

(b) both—

(i) the increment in steel stress near the tension face to 150 MPa as the load increases from its value when the extreme concrete tensile fibre is at zero stress to the short-term service load value; and

(ii) the centre-to-centre spacing of reinforcement, including bonded tendons, to 500 mm.

9.4.3 Crack control for shrinkage and temperature effects

9.4.3.1 *General*

The area of reinforcement required to control cracking due to shrinkage and temperature effects shall take into account the influence of flexural action, the degree of restraint against in-plane movements and the exposure classification, in accordance with Clauses 9.4.3.2 to 9.4.3.5.

For members greater than 500 mm thick, the reinforcement required near each surface may be calculated using 250 mm for *D*.

9.4.3.2 *Reinforcement in the primary direction*

No additional reinforcement is required to control expansion or contraction cracking if the area of reinforcement in the direction of the span of a one-way slab, or in each direction of a two-way slab, is not less than—

(a) the area required by Clause 9.1.1; and

(b) 75% of the area required by one of Clauses 9.4.3.3 to 9.4.3.5, as appropriate.

9.4.3.3 *Reinforcement in the secondary direction in unrestrained slabs*

Where the slab is free to expand or contract in the secondary direction, the minimum area of reinforcement in that direction shall be $(1.75–2.5\ \sigma_{cp})\ bD \times 10^{-3}$. This requirement may be waived if the width of the slab in the secondary direction is less than 2.5 m.

Accessed by SWINBURNE UNIVERSITY OF TECHNOLOGY on 15 Aug 2007

@Seismicisolation

@Seismicisolation

9.4.3.4 *Reinforcement in the secondary direction in restrained slabs*

Where a slab is restrained from expanding or contracting in the secondary direction, the area of reinforcement in that direction shall be not less than the following, as appropriate:

(a) For a slab fully enclosed within a building except for a brief period of weather exposure during construction—

(i) where a minor degree of control over cracking is required .....$(1.75 - 2.5\sigma_{cp})bD \times 10^{-3}$;

(ii) where a moderate degree of control over cracking is required .....$(3.5 - 2.5\sigma_{cp})bD \times 10^{-3}$; and

(iii) where a strong degree of control over cracking is required .....$(6.0 - 2.5\sigma_{cp})bD \times 10^{-3}$.

(b) For all other surface and exposure environments in classification A1 and for exposure classification A2 —

(i) where a moderate degree of control over cracking is required, ...$(3.5 - 2.5\sigma_{cp})bD \times 10^{-3}$;

(ii) where a strong degree of control over cracking is required, ...$(6.0 - 2.5\sigma_{cp})bD \times 10^{-3}$.

(c) For exposure classifications B1, B2 and C .....$(6.0 - 2.5\sigma_{cp})bD \times 10^{-3}$.

9.4.3.5 *Reinforcement in the secondary direction in partially restrained slabs*

Where a slab is partially restrained from expanding or contracting in the secondary direction, the minimum area of reinforcement in that direction shall be assessed taking into account the requirements of Clauses 9.4.3.3 and 9.4.3.4.

9.4.4 Crack control in the vicinity of restraints

In the vicinity of restraints, special attention shall be paid to the internal forces and cracks that may be induced by prestressing, shrinkage or temperature.

9.4.5 Crack control at openings and discontinuities

For crack control at openings and discontinuities in a slab, additional properly anchored reinforcement shall be provided if necessary.

9.5 VIBRATION OF SLABS

Vibration in slabs shall be considered and appropriate action taken, where necessary, to ensure that vibrations induced by machinery or vehicular and pedestrian traffic will not adversely affect the serviceability of the structure.

9.6 MOMENT RESISTING WIDTH FOR ONE-WAY SLABS SUPPORTING CONCENTRATED LOADS

The width of a solid one-way simply supported or continuous slab deemed to resist the moments caused by a concentrated load, may be taken as follows:

(a) Where the load is not near an unsupported edge:

$$b_{ef} = \text{the load width} + 2.4a(1.0-(a/L_n))$$

where

a = the perpendicular distance from the nearer support to the section under consideration

Accessed by SWINBURNE UNIVERSITY OF TECHNOLOGY on 15 Aug 2007

@Seismicisolation

@Seismicisolation

(b) Where the load is near an unsupported edge, not greater than the lesser of—

(i) the value given in Item (a) above; and

(ii) half the value given in Item (a) above plus the distance from the centre of the load to the unsupported edge.

9.7 LONGITUDINAL SHEAR IN COMPOSITE SLABS

Composite slab systems shall be checked for longitudinal shear at the interfaces between components in accordance with Clause 8.4.

Accessed by SWINBURNE UNIVERSITY OF TECHNOLOGY on 15 Aug 2007

@Seismicisolation

@Seismicisolation

SECTION 10 DESIGN OF COLUMNS FOR STRENGTH AND SERVICEABILITY

10.1 GENERAL

10.1.1 Design strength

The design strength of a column shall be determined by its ability to resist the axial forces and bending moments caused by the design loading for strength and any additional bending moments produced by slenderness effects.

10.1.2 Minimum bending moment

At any cross-section of a column, the design bending moment about each principal axis shall be taken to be not less than N^* times $0.05D$, where D is the overall depth of the column in the plane of the bending moment.

10.1.3 Definitions

For the purpose of this Section the following definitions apply:

10.1.3.1 *Braced columns*

Members for which the lateral load on the structure in the direction under consideration is resisted by masonry infill panels, shear walls or lateral bracing.

10.1.3.2 *Short columns*

Columns in which the additional bending moments due to slenderness can be taken as zero.

10.1.3.3 *Slender columns*

Columns that do not satisfy the requirements for short columns.

10.2 DESIGN PROCEDURES

10.2.1 Design procedure using linear elastic analysis

Where the axial forces and bending moments are determined by a linear elastic analysis as provided in Clause 7.6, a column shall be designed as follows:

(a) For a short column, in accordance with Clauses 10.3, 10.6 and 10.7.

(b) For a slender column, in accordance with Clauses 10.4 to 10.7.

10.2.2 Design procedure, incorporating secondary bending moments

Where the axial forces and bending moments are determined by an elastic analysis incorporating secondary bending moments due to lateral joint displacements, as provided in Clause 7.7, a column shall be designed in accordance with Clauses 10.6 and 10.7. The bending moments in slender columns shall be further increased by applying the moment magnifier for a braced column (δ_b) calculated in accordance with Clause 10.4.2 with L_e taken as L_u in the determination of N_c.

10.2.3 Design procedure, using rigorous analysis

Where the axial forces and bending moments are determined by a rigorous analysis, as provided in Clause 7.8, a column shall be designed in accordance with Clauses 10.6 and 10.7 without further consideration of additional moments due to slenderness.

Accessed by SWINBURNE UNIVERSITY OF TECHNOLOGY on 15 Aug 2007

@Seismicisolation

@Seismicisolation

10.3 DESIGN OF SHORT COLUMNS

10.3.1 General

Short columns shall be designed in accordance with Clauses 10.6 and 10.7, with additional bending moments due to slenderness taken to be zero. Alternatively, for short columns with small axial forces or small bending moments, the design may be in accordance with Clauses 10.3.2 and 10.3.3 respectively.

A column shall be deemed to be short where—

(a) for a braced column—

$$L_e / r \leq 25; \text{ or}$$

$$\leq 60\left(1 + M^*_1 / M^*_2\right)\left(1.0 - N^* / 0.6 N_{uo}\right)$$

whichever is the greater; or

(b) for an unbraced column—

$$L_e / r \leq 22$$

Where, for Items (a) and (b) above—

r = the radius of gyration of the cross-sections determined in accordance with Clause 10.5.2

M^*_1/M^*_2 = the ratio of the smaller to the larger of the design bending moments at the ends of the column. The ratio is taken to be negative when the column is bent in single curvature and positive when the column is bent in double curvature. When the absolute value of M^*_2 is less than or equal to $0.05DN^*$, the ratio shall be taken as –1.0.

L_e = the effective length determined in accordance with Clause 10.5; or alternatively may be taken as—

(i) for a braced column restrained by a flat slab floor, L_u;

(ii) for a braced column restrained by beams, $0.9L_u$; and

(iii) for a column designed in accordance with Clause 10.2.2, L_u

10.3.2 Short column with small compressive axial force

Where the design compressive axial force (N^*) in a short column is less than $0.1 f'_c A_g$, the cross-section may be designed for bending only.

10.3.3 Short braced column with small bending moments

The bending moments in a short interior column of a braced rectangular framed building structure may be disregarded if—

(a) the ratio of the longer to the shorter length of any two adjacent spans does not exceed 1.2;

(b) the loads are essentially uniformly distributed;

(c) the live load (q) does not exceed twice the dead load (g);

(d) members are of uniform cross-section; and

(e) the cross-section of the column is symmetrically reinforced,

in which case the design axial strength (ϕN_u) is taken as not greater than $0.75\phi N_{uo}$, where N_{uo} is determined in accordance with Clause 10.6.3.

Accessed by SWINBURNE UNIVERSITY OF TECHNOLOGY on 15 Aug 2007

@Seismicisolation

@Seismicisolation

10.4 DESIGN OF SLENDER COLUMNS

10.4.1 General

Slender columns shall be designed in accordance with Clauses 10.6 and 10.7, with additional bending moments due to slenderness effects taken into account by multiplying the largest design bending moment by the moment magnifier (δ).

The moment magnifier (δ) shall be calculated in accordance with Clause 10.4.2 for a braced column and Clause 10.4.3 for an unbraced column.

For columns subject to bending about both principal axes, the bending moment about each axis shall be magnified by δ, using the restraint conditions applicable to each plane of bending.

The additional end moments calculated from moment magnification may be distributed to the members of the joint in proportion to their stiffness.

10.4.2 Moment magnifier for a braced column

The moment magnifier (δ) for a braced column, shall be taken to be equal to δ_b given by—

$$\delta_b = k_m / (1 - N^* / N_c) \geq 1$$

where

N_c = the buckling load given in Clause 10.4.4

k_m = $(0.6 - 0.4\ M^*_1/M^*_2)$ but shall be taken as not less than 0.4, except that if the column is subjected to significant transverse loading between its ends and in the absence of more exact calculations, k_m shall be taken as 1.0

10.4.3 Moment magnifier for an unbraced column

The moment magnifier (δ) for an unbraced column shall be taken as the larger value of δ_b or δ_s where—

(a) δ_b for an individual column is calculated in accordance with Clause 10.4.2 assuming the column is braced; and

(b) δ_s for each column in the storey is calculated as

$$1/\left(1 - \sum N^* / \sum N_c\right)$$

where the summations include all columns within the storey and N_c is calculated for each column in accordance with Clause 10.4.4.

As an alternative to Item (b), δ_s may be calculated from a linear elastic critical buckling load analysis of the entire frame, where δ_s is taken as a constant value for all columns given by—

$$\delta_s = 1/\left[1 - (1 + \beta_d) / (\phi_s\ \lambda_{uc})\right]$$

where

β_d = $G/(G + Q)$ taken as zero when $L_e/r \leq 40$ and $N^* \leq M^*/2D$, and G and Q are the design axial load components due to dead load and live load respectively

ϕ_s = a correlation factor taken as 0.6.

λ_{uc} = the ratio of the elastic critical buckling load of the entire frame to the design load for strength, calculated by taking the cross-sectional stiffness of the flexural members and columns as $0.4E_cI_f$ and $0.8E_cI_c$ respectively.

The frame shall be proportioned so that δ_s for any column is not greater than 1.5.

Accessed by SWINBURNE UNIVERSITY OF TECHNOLOGY on 15 Aug 2007

@Seismicisolation

@Seismicisolation

10.4.4 Buckling load

The buckling load, N_c, shall be taken as—

$$N_c = \left(\pi^2 / L_e^{\ 2}\right)\left[182 d_o \left(\phi M_{ub}\right) / \left(1 + \beta_d\right)\right]$$

where

ϕM_{ub} = the design strength in bending of the cross-section when k_{uo} = 0.545 and ϕ = 0.6.

10.5 SLENDERNESS

10.5.1 General

The slenderness ratio (L_e/r) of a column shall not exceed 120, unless a rigorous analysis has been carried out in accordance with Clause 7.8 and the column is designed in accordance with Clause 10.2.3.

Where the forces and moments acting on a column have been obtained from a linear elastic analysis, as specified in Clause 7.6, the influence of slenderness shall be taken into account using a radius of gyration (r) specified in Clause 10.5.2 and an effective length (L_e), in accordance with Clause 10.5.3.

10.5.2 Radius of gyration

The radius of gyration (r) shall be calculated for the gross concrete cross-section. For a rectangular cross-section, r may be taken as 0.3D, where D is the overall dimension in the direction in which stability is being considered and for a circular cross-section, r may be taken as 0.25D.

10.5.3 Effective length of a column

The effective length of a column (L_e) shall be taken as kL_u where the effective length factor, k, is determined from Figure 10.5.3(A) for columns with simple end restraints, or more generally from Figure 10.5.3(B) or 10.5.3(C), as appropriate.

The end restraint coefficients (γ_1 and γ_2) shall be determined—

(a) for regular rectangular framed structures where the axial forces in the beams are generally small, in accordance with Clause 10.5.4;

(b) for all structures, including non-rectangular framed structures or structures where the axial forces in the restraining members are large, in accordance with Clause 10.5.5; and

(c) where the column ends at a footing, in accordance with Clause 10.5.6.

Alternatively, the effective length of a column may be determined from the elastic critical buckling load of the frame, as calculated by analysis.

10.5.4 End restraint coefficients for regular rectangular framed structures

For regular rectangular framed structures, the end restraint coefficient (γ_1) at one end of a column and the end restraint coefficient (γ_2) at the other end may each be calculated as—

$$\frac{\Sigma(I/L)_c}{\Sigma(\beta I/L)_b}$$

Accessed by SWINBURNE UNIVERSITY OF TECHNOLOGY on 15 Aug 2007

@Seismicisolation

@Seismicisolation

where

$\Sigma(I/L)_c$ = the sum of the stiffness in the plane of bending of all the columns meeting at and rigidly connected to the end of the column under consideration

$\Sigma(\beta I/L)_b$ = the sum of the stiffness in the plane of bending of all the beams or slabs, or both, meeting at and rigidly connected to the same end of the column under consideration

β = a fixity factor, given in Table 10.5.4, for fixity conditions at the end of each beam or slab, or both, opposite to the end connected to the column under consideration

TABLE 10.5.4

FIXITY FACTOR (β)

Fixity conditions at far end of a beam or slab, or both	Fixity factor (β)	
	Beam or slab or both, in a braced frame	Beam or slab or both in an unbraced frame
Pinned	1.5	0.5
Rigidly connected to a column	1.0	1.0
Fixed	2.0	0.67

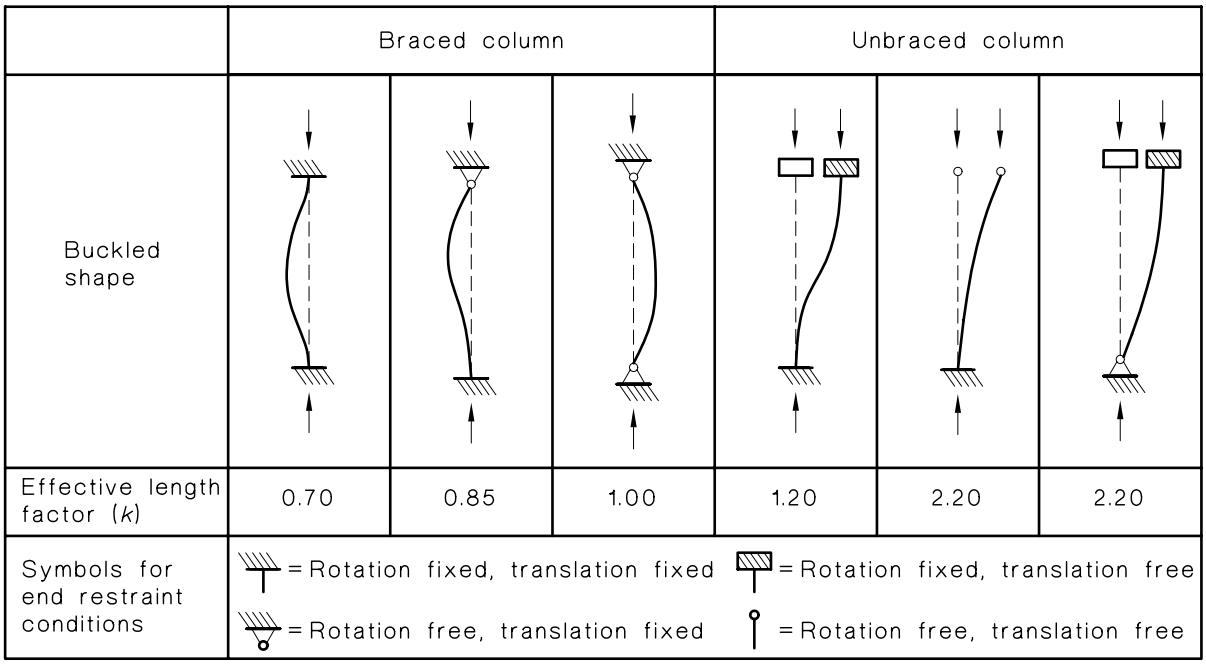

FIGURE 10.5.3(A) EFFECTIVE LENGTH FACTORS (k) FOR COLUMNS WITH SIMPLE END RESTRAINTS

Accessed by SWINBURNE UNIVERSITY OF TECHNOLOGY on 15 Aug 2007

@Seismicisolation

@Seismicisolation

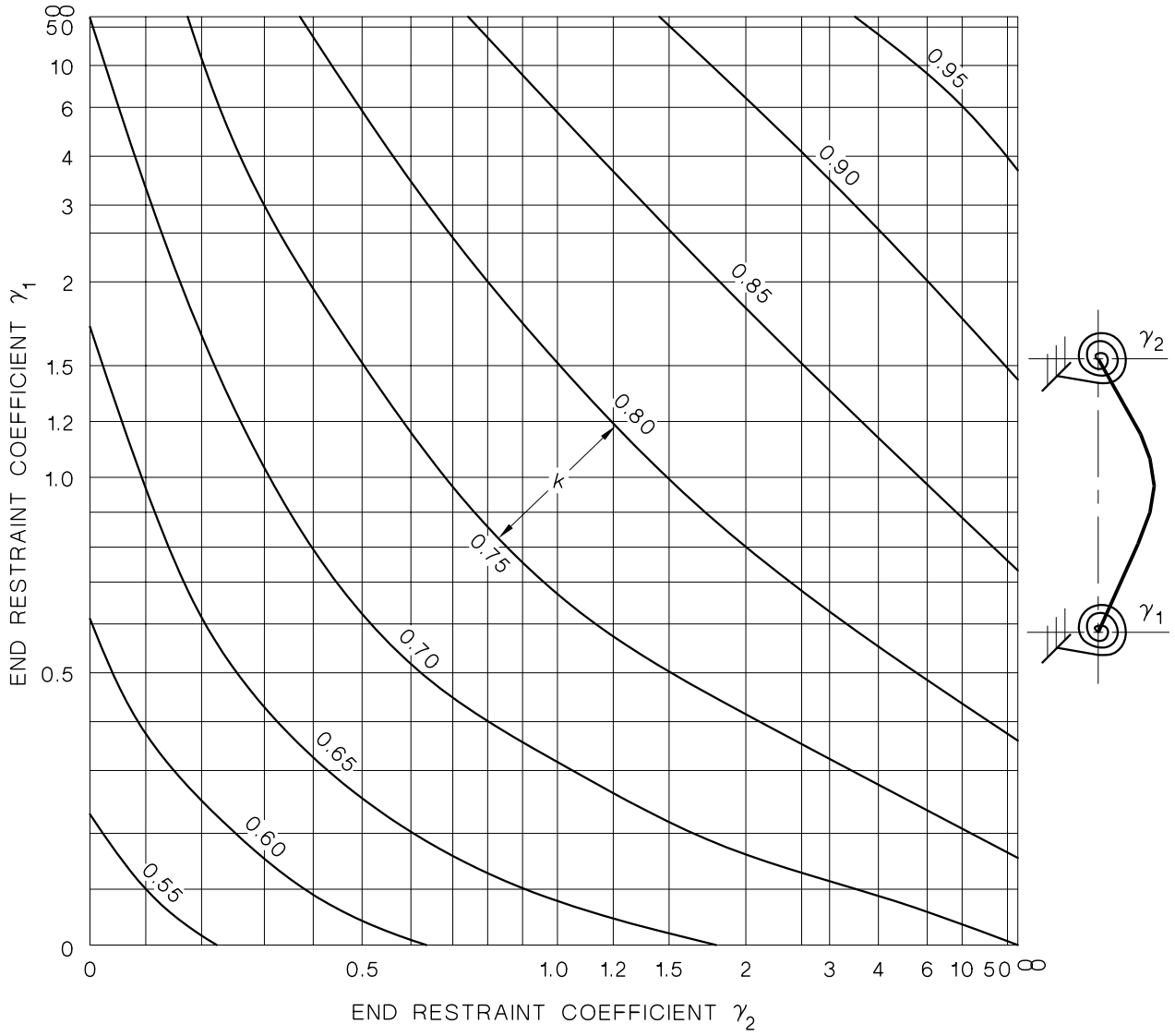

FIGURE 10.5.3(B) EFFECTIVE LENGTH FACTOR (*k*) FOR A BRACED COLUMN

Accessed by SWINBURNE UNIVERSITY OF TECHNOLOGY on 15 Aug 2007

@Seismicisolation

@Seismicisolation

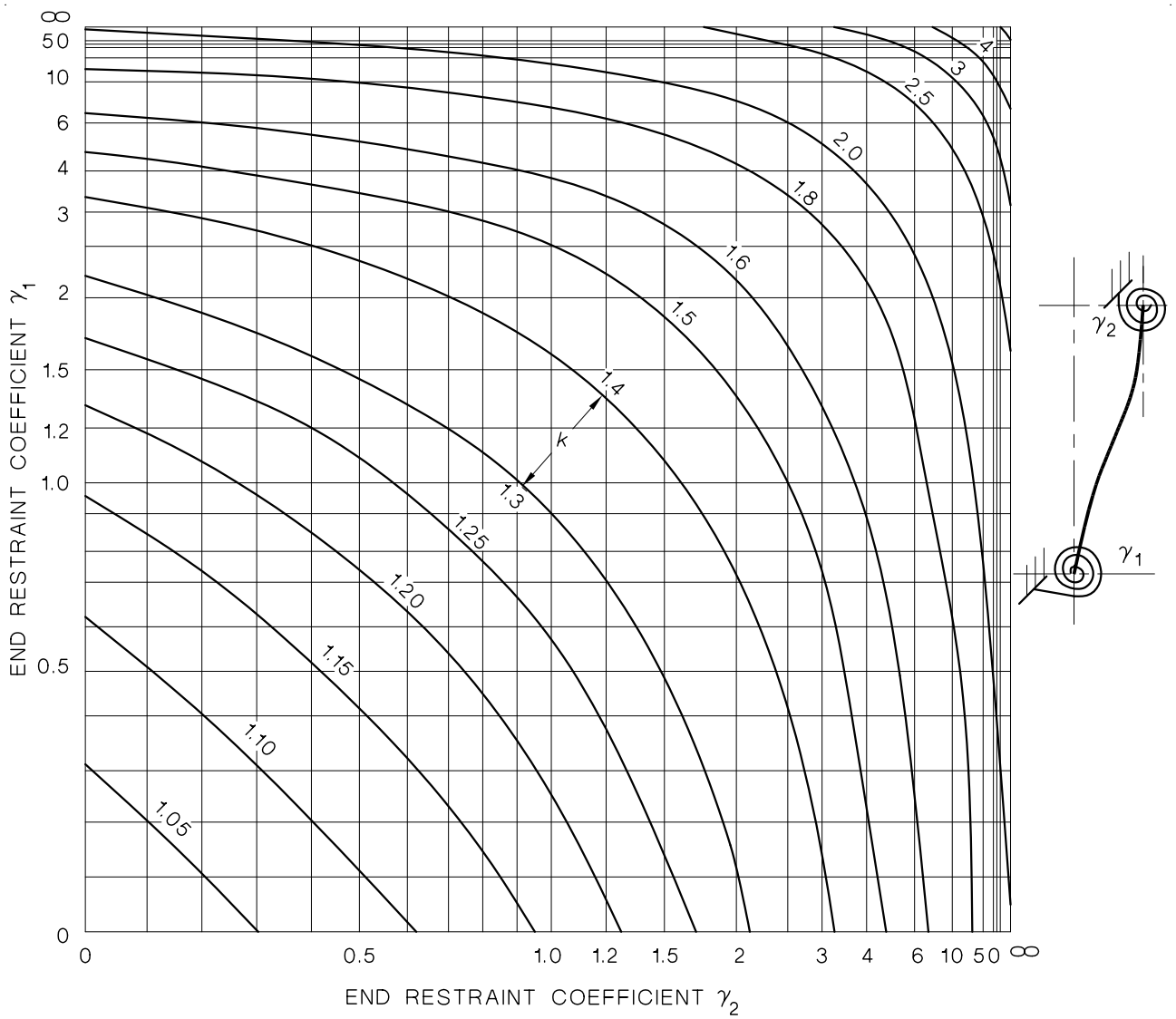

FIGURE 10.5.3(C) EFFECTIVE LENGTH FACTOR (k) FOR AN UNBRACED COLUMN

10.5.5 End restraint coefficients for any framed structure

For any framed structure, the end restraint coefficient (γ_1) at one end of a column and the end restraint coefficient (γ_2) at the other end may be calculated as the ratio of the column stiffness to the sum of the stiffness of all the members, except the column, meeting at the end under consideration. In the calculation of the stiffness of the members other than the column, due account shall be taken of the fixity conditions of each member at the end remote from the column-end being considered as well as any reduction in member stiffness due to axial compression.

Accessed by SWINBURNE UNIVERSITY OF TECHNOLOGY on 15 Aug 2007

@Seismicisolation

@Seismicisolation

10.5.6 End restraint provided by footings

Where a footing provides negligible restraint to the rotation of the end of a column, γ is theoretically infinite but may be taken as 10.

Where a footing is specifically designed to prevent rotation of the end of a column, γ is theoretically zero but shall be taken as one unless analysis would justify a smaller value.

10.6 STRENGTH OF COLUMNS IN COMBINED BENDING AND COMPRESSION

10.6.1 Basis of strength calculations

Calculations for the strength of cross-sections in bending, combined with axial forces, shall incorporate equilibrium and strain-compatibility considerations and be consistent with the following assumptions:

(a) Plane sections normal to the axis remain plane after bending.

(b) The concrete has no tensile strength.

(c) The distribution of stress in the concrete and the steel is determined using a stress-strain relationship determined from Clauses 6.1.4 and 6.2.3 respectively (see Note).

(d) The strain in compressive reinforcement does not exceed 0.003.

Columns subject to axial force with bending moments about each principal axis may take into account the concessions given in Clauses 10.6.4 and 10.6.5.

NOTE: If a curvilinear stress-strain relationship is used, Clause 6.1.4 places a limit on the value of the maximum concrete stress.

10.6.2 Rectangular stress block

Where the neutral axis lies within the cross-section and provided that the maximum strain in the extreme compression fibre of the concrete is taken as 0.003, Clause 10.6.1(c) shall be deemed to be satisfied for the concrete by assuming that a uniform concrete compressive stress of 0.85 f'_c acts on an area bounded by—

(a) the edges of the cross-section; and

(b) a line parallel to the neutral axis under the loading concerned, and located at a distance $\gamma k_u d$ from the extreme compressive fibre where—

$$\gamma = \left[0.85 - 0.007\left(f'_c - 28\right)\right] \text{ with the limits 0.65 to 0.85.}$$

NOTE: The modification given in Clause 6.1.4 is included in the rectangular stress block assumptions.

10.6.3 Calculation of N_{uo}

The ultimate strength in compression (N_{uo}) shall be calculated by assuming—

(a) a uniform concrete compressive stress of 0.85 f'_c; and

(b) a maximum strain in the steel and the concrete of 0.0025.

10.6.4 Design based on each bending moment acting separately

For a rectangular cross-section, where the ratio of the larger to the smaller cross-sectional dimension does not exceed 3.0, which is subjected simultaneously to an axial force and bending moments about each principal axis, the cross-section may be designed for the axial force with each bending moment considered separately, provided that the line of action of the resultant axial force falls within the shaded area of the cross-section shown in Figure 10.6.4.

Accessed by SWINBURNE UNIVERSITY OF TECHNOLOGY on 15 Aug 2007

@Seismicisolation

@Seismicisolation

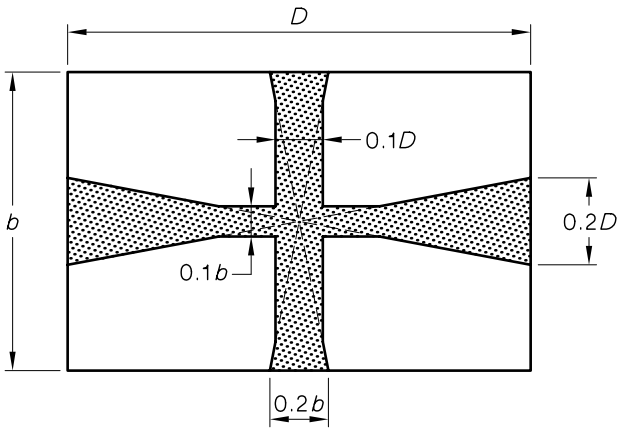

Shaded areas symetrical about column centrelines

FIGURE 10.6.4 LIMITATION FOR LINE OF ACTION OF THE RESULTANT AXIAL FORCE

10.6.5 Design for biaxial bending and compression

A rectangular cross-section, subject to axial force and bending moment acting simultaneously about each principal axis, may be designed such that—

$$\left(\frac{M^*_x}{\phi M_{ux}}\right)^{\alpha_n} + \left(\frac{M^*_y}{\phi M_{uy}}\right)^{\alpha_n} \leq 1.0$$

where

ϕM_{ux}, ϕM_{uy} = the design strength in bending, calculated separately, about the major and minor axis respectively under the design axial force (N^*)

M^*_x, M^*_y = the design bending moment about the major and minor axis respectively, magnified if applicable

α_n = $0.7 + 1.7\ N^*/0.6N_{uo}$, within the limits $1 \leq \alpha_n \leq 2$

10.7 REINFORCEMENT REQUIREMENTS FOR COLUMNS

10.7.1 Limitations on longitudinal steel

The cross-sectional area of the longitudinal reinforcement in a column shall—

(a) be not less than $0.01A_g$ except that, in a column which has a larger area than that required for strength, a reduced value of A_{sc} may be used if $A_{sc}f_{sy} > 0.15N^*$; and

(b) not exceed $0.04A_g$ unless the amount and disposition of the reinforcement will not prevent the proper placing and compaction of the concrete at splices and at junctions of the members.

10.7.2 Bundled bars

Groups of parallel longitudinal bars, which are bundled to act as a unit, shall have not more than 4 bars in any one bundle and be tied together in contact.

10.7.3 Restraint of longitudinal reinforcement

10.7.3.1 *General requirements*

The following longitudinal bars in columns shall be laterally restrained in accordance with Clause 10.7.3.2:

(a) Single bars—

@Seismicisolation

Accessed by SWINBURNE UNIVERSITY OF TECHNOLOGY on 15 Aug 2007

@Seismicisolation

(i) each corner bar;

(ii) all bars, where bars are spaced at centres of more than 150 mm; and

(iii) at least every alternate bar, where bars are spaced at 150 mm or less.

(b) Bundled bars, each bundle.

10.7.3.2 *Lateral restraint*

Lateral restraint shall be deemed to be provided if the longitudinal reinforcement is placed within and in contact with—

(a) a non-circular tie—

(i) at a bend in the tie, where the bend has an included angle of 135° or less;

(ii) between two 135° fitment hooks; or

(iii) inside a single 135° fitment hook of a fitment, which is approximately perpendicular to the column face; or

(b) a circular tie or helix and the longitudinal reinforcement are equally spaced around the circumference.

10.7.3.3 *Diameter and spacing of ties and helices*

The diameter and spacing of ties and helices shall comply with the following:

(a) The bar diameter of the tie or helix shall be not less than that given in Table 10.7.3.3.

TABLE 10.7.3.3

BAR DIAMETERS FOR TIES AND HELICES

Longitudinal bar diameter mm	Minimum bar diameter of tie or helix mm
Single bars up to 20	6
Single bars 24 to 36	10
Bundled bars	12

(b) The spacing of ties, or the pitch of a helix, shall not exceed the smaller of—

(i) D_c and $15d_b$ for single bars; or

(ii) $0.5D_c$ and $7.5d_b$ for bundled bars,

where

D_c = the smaller column dimension if rectangular or the column diameter if circular

d_b = the diameter of the smallest bar in the column

(c) One tie, or the first turn of a helix, shall be located not more than 50 mm vertically above the top of a footing, or the top of a slab in any storey. Another tie, or the final turn of a helix, shall be located not more than 50 mm vertically below the soffit of the slab except that in a column with a capital, the tie or turn of the helix shall be located at a level at which the area of the cross-section of the capital is not less than twice that of the column.

Accessed by SWINBURNE UNIVERSITY OF TECHNOLOGY on 15 Aug 2007

@Seismicisolation

@Seismicisolation

Where beams or brackets frame from four directions into a column and adequately restrain the column in all directions, the ties or helix may be terminated 50 mm below the highest soffit of such beams or brackets.

(d) Welded wire mesh, having strength and anchorage equivalent to that required for bars, may be used.

10.7.3.4 *Detailing of ties and helices*

Detailing of ties and helices shall be as follows:

(a) A rectangular tie shall be spliced by welding, or by fixing two 135° fitment hooks around a bar or a bundle at a fitment corner. Internal ties may be spliced by lapping within the column core.

(b) A circular shaped tie shall be spliced either by welding, or by overlapping and fixing two 135° fitment hooks around adjacent longitudinal bars or bundles.

(c) A helix shall be anchored at its end by one-and-one-half extra turns of the helix. It may be spliced within its length either by welding, or by mechanical means.

(d) Where hooks or cogs are specified in combination with bundled bars, the internal diameter of the bend shall be increased sufficiently to readily accommodate the bundle.

10.7.3.5 *Column joint reinforcement*

Where bending moments from a floor system are transferred to a column, lateral shear reinforcement, of area $A_{sv} \geq 0.35\ bs/f_{sy.f}$, shall be provided through the joint unless restraint on all sides is provided by a floor system of approximately equal depth.

10.7.4 Splicing of longitudinal reinforcement

10.7.4.1 *General*

Longitudinal reinforcement in columns shall be spliced in accordance with Clauses 10.7.4.2 to 10.7.4.5 and the splices shall comply with Clause 13.2.

10.7.4.2 *Minimum tensile strength*

At any splice in a column, a tensile strength in each face of the column of not less than $0.25 f_{sy} A_s$ shall be provided, where A_s is the cross-sectional area of longitudinal reinforcement in that face.

10.7.4.3 *Where tensile force exceeds the minimum tensile strength*

At any splice in a column where tensile stress exists and the tensile force in the longitudinal bars at any face of the column, due to strength design load effects, exceeds the minimum strength requirements given in Clause 10.7.4.2, the force in the bars shall be transmitted by—

(a) a welded or mechanical splice; or

(b) a lap-splice in tension in accordance with Clause 13.2.2 or 13.2.5.

10.7.4.4 *End-bearing splice in compression*

Where the splice is always in compression, the force in the longitudinal bar may be transmitted by the bearing of square-cut mating ends held in concentric contact by a sleeve, provided that an additional tie, which complies with Clause 10.7.3, is placed above and below each sleeve. The bars shall be rotated to achieve the maximum possible area of contact between the ends of the bars and the requirements of Clause 10.7.4.2 shall be met.

10.7.4.5 *Offset bars*

Where a longitudinal bar is offset to form a lap splice—

Accessed by SWINBURNE UNIVERSITY OF TECHNOLOGY on 15 Aug 2007

@Seismicisolation

@Seismicisolation

(a) the slope of the inclined part of the bar in relation to the axis shall not exceed 1 in 6;

(b) the portions of the bar on either side of the offset shall be parallel; and

(c) adequate lateral support shall be provided at the offset.

Where a column face is offset 75 mm or greater, longitudinal bars shall not be offset by bending but shall be lap-spliced with separate splicing bars placed adjacent to the offset column faces.

10.8 TRANSMISSION OF AXIAL FORCE THROUGH FLOOR SYSTEMS

The transmission of axial force through floor systems shall be designed for in accordance with the following:

(a) Where the strength specified for the column concrete is greater than 1.4 times that specified for the floor system, proper transmission of force through the floor concrete shall be provided by adding vertical reinforcement, in accordance with calculations made on the basis of the lower concrete strength.

(b) Notwithstanding the requirements of Item (a) above, where the ratio of specified strength for the columns to specified strength for the floor system does not exceed 2.0, proper transmission of force through the floor concrete shall be deemed to exist if—

(i) the column is restrained on four sides by beams of approximately equal depth, or by a slab;

(ii) the column is restrained on three sides by beams of approximately equal depth, or by a slab, and the unrestrained face is the shorter side of the column and the column has a ratio of long to short sides of not less than 3.0;

(iii) the column is restrained on three sides by beams of approximately equal depth, or by a slab, and the dimension of the column perpendicular to the unrestrained face is not less than twice the depth of the floor system; or

(iv) the column is restrained on two sides by beams of approximately equal depth, or by a slab, and the height of the column cast with concrete of the floor system is not greater than 0.25 times the least dimension of the column.

Accessed by SWINBURNE UNIVERSITY OF TECHNOLOGY on 15 Aug 2007

@Seismicisolation

@Seismicisolation

SECTION 11 DESIGN OF WALLS

11.1 APPLICATION

This Section applies to the design of planar walls.

11.2 DESIGN PROCEDURES

11.2.1 General

Planar walls shall be designed in accordance with Clauses 11.2.2 to 11.2.6 if appropriate. The reinforcement provided shall comply with Clause 11.6.

11.2.2 Walls subject only to in-plane vertical forces

Walls subject only to in-plane vertical forces may be designed either —

(a) in accordance with the simplified methods of Clause 11.4 if they are braced in accordance with Clause 11.3; or

(b) as columns in accordance with Section 10 if vertical reinforcement is provided in each face, except that Clause 11.6.4 shall override the requirements of Clause 10.7.3.

11.2.3 Walls subject to in-plane vertical and horizontal forces

Walls subject to vertical and horizontal forces in the plane of the wall shall be designed for vertical action effects in accordance with Clause 11.2.2 and horizontal action effects in accordance with Clause 11.5.

11.2.4 Walls subject principally to horizontal forces perpendicular to the wall

Walls subject to horizontal forces perpendicular to the plane of the wall and for which the design vertical force (N^*) at mid-height does not exceed $0.03 f'_c A_g$, shall be designed as slabs in accordance with the appropriate clauses of Section 9 except that the ratio of effective height to thickness shall not exceed 50, where the effective height is determined from Clause 11.4.3.

11.2.5 Walls subject to in-plane vertical forces and horizontal forces perpendicular to the wall

Walls subject to in-plane vertical forces and horizontal forces perpendicular to the plane of the wall shall be designed as columns in accordance with Section 10, except that Clause 11.6.4 shall override the requirements of Clause 10.7.3.

11.2.6 Walls forming part of a framed structure

Walls subject to axial forces bending moments and shear forces arising from forces acting on the frame shall be designed in accordance with Sections 9 and 10 as appropriate.

11.3 BRACING OF WALLS

Walls shall be assumed to be braced if they are laterally supported by a structure in which all the following apply:

(a) Walls or vertical braced elements are arranged in two directions so as to provide lateral stability to the structure as a whole.

(b) Lateral forces are resisted by shear in the planes of these walls or by braced elements.

(c) Floor and roof systems are designed to transfer lateral forces.

Accessed by SWINBURNE UNIVERSITY OF TECHNOLOGY on 15 Aug 2007

@Seismicisolation

@Seismicisolation

(d) Connections between the wall and the lateral supports are designed to resist a horizontal force not less than—

(i) the simple static reactions to the total applied horizontal forces at the level of lateral support; and

(ii) 2.5% of the total vertical load that the wall is designed to carry at the level of lateral support, but not less than 2 kN per metre length of wall.

11.4 SIMPLIFIED DESIGN METHOD FOR BRACED WALLS SUBJECT TO VERTICAL FORCES ONLY

11.4.1 Eccentricity of vertical load

The design of a wall shall take account of the actual eccentricity of the vertical force but in no case shall the design bending moment (M^*) be taken as less than N^* times $0.05t_w$.

The vertical load transmitted to a wall by a discontinuous concrete floor or roof shall be assumed to act at one-third the depth of the bearing area measured from the span face of the wall. Where there is an in situ concrete floor continuous over the wall, the load shall be assumed to act at the centre of the wall.

The resultant eccentricity of the total vertical load on a braced wall at any level between horizontal lateral supports, shall be calculated on the assumption that the resultant eccentricity of all the vertical loads above the upper support is zero.

11.4.2 Maximum effective height-to-thickness ratio

The ratio of effective height to thickness (H_{we}/t_w), shall not exceed 30, except that for walls in which the design axial force (N^*) at mid-height does not exceed $0.03f'_c A_g$, the ratio may be increased to 50.

11.4.3 Effective height

The effective height (H_{we}) of a braced wall shall be taken as follows:

(a) Where restrained against rotation at both ends by—

(i) floors ..... $0.75H_{wu}$; or

(ii) intersecting walls or similar members ..... $0.75L_l$,

whichever is the lesser.

(b) Where not restrained against rotation at both ends by—

(i) floors ..... $1.0H_{wu}$; or

(ii) intersecting walls or similar members ..... $1.0L_l$,

whichever is the lesser,

where in both Items (a) and (b)

H_{wu} = the unsupported height of the wall

L_l = the horizontal distance between centres of lateral restraint

11.4.4 Design axial strength of a wall

The design axial strength per unit length of a braced wall in compression shall be taken as ϕN_u, where

$\phi = 0.6$; and

$$N_u = (t_w - 1.2e - 2e_a)0.6f'_c$$

Accessed by SWINBURNE UNIVERSITY OF TECHNOLOGY on 15 Aug 2007

@Seismicisolation

@Seismicisolation

where

N_u = the ultimate strength per unit length of wall

t_w = the thickness of the wall

e = the eccentricity of the load measured at right angles to the plane of the wall, determined in accordance with Clause 11.4.1

e_a = an additional eccentricity taken as $(H_{we})^2/2500t_w$

11.5 DESIGN OF WALLS FOR IN-PLANE HORIZONTAL FORCES

11.5.1 In-plane bending

Where the in-plane horizontal forces, acting in conjunction with the axial forces, are such that on a horizontal cross-section there is—

(a) always compression over the entire section, in-plane bending may be neglected and the wall designed for horizontal shear only, in accordance with the remainder of this Section; or

(b) tension on part of the section, the wall shall be designed for in-plane bending in accordance with Section 8 and for horizontal shear in accordance with the remainder of this Section, or for in-plane bending and shear, in accordance with Section 12, if appropriate.

11.5.2 Critical section for shear

The critical section for maximum shear shall be taken at a distance from the base of $0.5L_w$ or $0.5H_w$, whichever is less.

11.5.3 Strength in shear

The design strength of a wall subject to in-plane shear shall be taken as ϕV_u

where

$$V_u = V_{uc} + V_{us}$$

and V_{us} and V_{us} are determined from Clause 11.5.4 and Clause 11.5.5 respectively but in no case shall V_u be taken as greater than—

$$V_{u.max.} = 0.2 f_c' \left(0.8 L_w t_w\right)$$

11.5.4 Shear strength without shear reinforcement

The ultimate shear strength of a wall without shear reinforcement, V_{uc}, shall be taken as—

(a) where $H_w / L_w \leq 1$,

$$V_{uc} = (0.66\sqrt{f_c'} - 0.21\frac{H_w}{L_w}\sqrt{f_c'})\, 0.8\, L_w\ t_w \text{; or}$$

(b) where $H_w/L_w > 1$, the lesser of the values calculated from Item (a) above and from—

$$V_{uc} = \left[0.05\sqrt{f_c'} + \frac{0.1\sqrt{f_c'}}{\left(\frac{H_w}{L_w} - 1\right)}\right] 0.8\, L_w\ t_w$$

but in any case

$$V_{uc} \geq 0.17\sqrt{f_c'}\,(0.8 L_w\ t_w)$$

Accessed by SWINBURNE UNIVERSITY OF TECHNOLOGY on 15 Aug 2007

@Seismicisolation

@Seismicisolation

11.5.5 Contribution to shear strength by shear reinforcement

The contribution to the ultimate shear strength of a wall by shear reinforcement (V_{us}) shall be determined from the following equation:

$$V_{us} = p_w f_{sy}(0.8 L_w t_w)$$

where p_w is determined as follows:

(a) For walls where $H_w/L_w \leq 1$, p_w shall be the lesser of the ratios of either the vertical reinforcement area or the horizontal reinforcement area to the cross-sectional area of wall in the respective direction.

(b) For walls where $H_w/L_w > 1$, p_w shall be ratio of the horizontal reinforcement area to the cross-sectional area of wall per vertical metre.

11.6 REINFORCEMENT REQUIREMENTS FOR WALLS

11.6.1 Minimum reinforcement

Walls shall have a reinforcement ratio (p_w)—

(a) in the vertical direction, of not less than the larger of either 0.0015 or the value required by structural analysis; and

(b) in the horizontal direction, of not less than 0.0025 except that where there is no restraint against horizontal shrinkage or thermal movements, this may be reduced to zero for walls less than 2.5 m overall in the horizontal direction, or to 0.0015 otherwise.

For walls greater than 500 mm thick, the minimum reinforcement required near each surface may be calculated using 250 mm for t_w.

11.6.2 Horizontal reinforcement for crack control

Where a wall is restrained from expanding or contracting horizontally due to shrinkage or temperature, the horizontal reinforcement ratio shall be not less than the following, as appropriate:

(a) For exposure classifications A1 and A2—

(i) where a minor degree of control over cracking is required 0.0025;

(ii) where a moderate degree of control over cracking is required 0.0035;

(iii) where a strong degree of control over cracking is required.....0.006.

(b) For exposure classifications B1, B2 and C .....0.006.

11.6.3 Spacing of reinforcement

The minimum clear distance between parallel bars, ducts and tendons shall be sufficient to ensure that the concrete can be placed and compacted to comply with Clause 19.1.3 but shall be not less than $3d_b$.

The maximum centre-to-centre spacing of parallel bars shall be $2.5t_w$ or 350 mm, whichever is the lesser.

For walls greater than 200 mm thick, the vertical and horizontal reinforcement shall be provided in two grids, one near each face of the wall.

11.6.4 Restraint of vertical reinforcement

For walls designed as columns in accordance with Section 10, the restraint provisions of Clause 10.7.3 do not apply if $N^* \leq 0.5\phi N_u$.

Accessed by SWINBURNE UNIVERSITY OF TECHNOLOGY on 15 Aug 2007

@Seismicisolation

@Seismicisolation

SECTION 12 DESIGN OF NON-FLEXURAL MEMBERS, END ZONES AND BEARING SURFACES

12.1 DESIGN OF NON-FLEXURAL MEMBERS

12.1.1 General

12.1.1.1 *Application*

This Clause applies to the design of non-flexural members including deep beams, footings, pile caps, corbels, continuous nibs and stepped joints where the ratio of the clear span or projection to the overall depth is less than—

(a) for cantilevers 1.5;

(b) for simply supported members ..... 3; and

(c) for continuous members ..... 4.

12.1.1.2 *Design basis*

The design strength of non-flexural members shall be calculated as ϕ times the ultimate strength, based on one of the following:

(a) The general principles of concrete strut and steel tension tie action in accordance with Clause 12.1.2.

(b) For deep beams, footings and pile caps stress analysis in accordance with Clause 12.1.3.

(c) Empirical design methods in accordance with Clause 12.1.4.

12.1.1.3 *Spacing of reinforcement*

The minimum clear distance between parallel bars, (including bundled bars), ducts, or tendons shall be sufficient to ensure that the concrete can be placed and compacted to comply with Clause 19.1.3.

12.1.2 Design based on strut and tie action

12.1.2.1 *Structural idealization*

The member shall be idealized as a series of tension ties and concrete struts interconnected at nodes to form a truss, to carry the loads to the supports.

In the idealization, the size of the struts and ties shall be no larger than the capacity of the nodes to transfer forces between the elements of the idealization.

12.1.2.2 *Concrete strut*

The ultimate strength of the concrete strut shall be taken as not greater than $b_c d_c f_{c.cal}$,

where

b_c = the width of the compression strut

d_c = the depth of the compression strut

$f_{c.cal}$ = $(0.8 - f'_c/200)\, f'_c$

12.1.2.3 *Nodes*

Where the design compressive stress incident on the nodes exceeds $\phi f_{c.cal}$, confinement reinforcement shall be provided.

Accessed by SWINBURNE UNIVERSITY OF TECHNOLOGY on 15 Aug 2007

@Seismicisolation

@Seismicisolation

12.1.2.4 *Tension tie*

The tension tie shall be effectively anchored, in accordance with Section 13, to transfer the force to the node of the truss.

12.1.2.5 *Additional reinforcement*

Additional reinforcement shall be provided to ensure adequate serviceability and to protect against the splitting of compression zones at stress concentrations or regions of high load intensity.

12.1.2.6 *Additional requirements for corbels*

Corbels designed as cantilevered deep beams, on the basis of concrete strut and tension tie action, shall take into account horizontal forces and movements from the supported members and shall comply with the following:

(a) The depth of the outside face shall be not less than half the depth at the face of the support.

(b) The line of action of the load may be taken at the outside edge of the bearing pad if any, or at the commencement of any edge chamfer, or at the outside face of the corbel as appropriate. Where a flexural member is being supported, the outside face of the corbel shall be protected against spalling.

(c) The tensile reinforcement shall be anchored at the free end of the corbel either by a welded or mechanical anchorage or by forming a loop in either a vertical or horizontal plane. Where the main reinforcement is looped, the loaded area shall not project beyond the straight portion of this reinforcement.

(d) Additional horizontal tensile reinforcement, having a total area equal to half of the main tensile reinforcement area, shall be distributed over the upper two-thirds of the corbel.

12.1.2.7 *Additional requirements for continuous concrete nibs*

Continuous nibs designed as short cantilever slabs, on the basis of concrete strut and tension tie action, shall take into account horizontal forces and movements from the supported members and shall comply with the following:

(a) The projection of the nib shall provide adequate bearing for the type of member supported, but shall be not less than 100 mm.

(b) The line of action of the load may be taken at the outside edge of the bearing pad if any, or at the commencement of any edge chamfer, or at the outside face of the nib as appropriate. Where a flexural member is being supported, the outside face of the nib shall be protected against spalling.

(c) The tensile reinforcement shall be anchored at the free end of the nib either by a welded or mechanical anchorage, or by forming a loop in either the vertical or horizontal plane. Vertical loops shall be fabricated from bars of size not greater than 12 mm. Where the main reinforcement is looped, the loaded area shall not project beyond the straight portion of this reinforcement.

12.1.2.8 *Additional requirements for stepped joints*

Stepped joints designed as short cantilevers, on the basis of concrete strut and tension tie action, shall take into account the horizontal forces and movements from the supported members and shall comply with the following:

(a) The horizontal reinforcement shall extend at least a distance equal to the beam depth (D) beyond the step and shall be provided with anchorage beyond the plane of any potential shear crack.

Accessed by SWINBURNE UNIVERSITY OF TECHNOLOGY on 15 Aug 2007

@Seismicisolation

@Seismicisolation

(b) In pretensioned members, the vertical component of the force in the prestressing steel shall be ignored.

12.1.3 Design based on stress analysis

12.1.3.1 *Analysis*

The ultimate strength of a deep beam, pile cap or footing, based on stress analysis, shall use a linear or non-linear analysis for the design loads, in accordance with accepted principles of mechanics.

12.1.3.2 *Compressive strength*

The ultimate compressive strength of the section shall be taken as the compressive stress ($f_{c.cal}$) calculated in accordance with Clause 12.1.2.2. It shall be permissible to average the calculated compressive stress over 100 mm, to reduce peak values.

Reinforcement, normal to the direction of the compressive stress, shall be provided to inhibit splitting in areas of high compressive stress.

12.1.3.3 *Tensile forces*

All tensile forces shall be taken by reinforcement fully anchored in accordance with Clause 13.1.

12.1.4 Empirical design methods

The ultimate strength of a non-flexural member may be based on design methods derived from test results, provided that the proportions of the member and the configurations of the reinforcement are within the range tested.

12.2 ANCHORAGE ZONES FOR PRESTRESSING ANCHORAGES

12.2.1 Application

This Clause applies to the design of rectangular anchorage zones in post-tensioned concrete members but is limited to cases having no more than two anchorages in any elevation or plan.

An anchorage zone is the zone between the loaded face and the cross-section at which a linear distribution of stress due to prestress is achieved.

12.2.2 General

Reinforcement shall be provided to carry tensile forces that arise from the action and dispersal of the prestressing forces in anchorage zones.

In general, the dispersal occurs through both the depth and the width of the anchorage zone, and reinforcement shall, therefore, be provided in planes parallel to the end faces in two orthogonal directions. A two-dimensional analysis for each loading case shall be carried out in each direction in turn. The tensile forces shall be calculated on longitudinal sections through anchorages and on longitudinal sections where peak values of transverse moments occur.

The transverse moment on a longitudinal section is the equilibrating moment acting on the free body bounded by the longitudinal section, a free surface parallel to it, the loaded face, and a plane parallel to the loaded face at the inner end of the anchorage zone.

12.2.3 Loading cases to be considered

Loading cases to be considered shall include—

(a) all anchorages loaded; and

(b) critical loadings during the stressing operation.

Accessed by SWINBURNE UNIVERSITY OF TECHNOLOGY on 15 Aug 2007

@Seismicisolation

@Seismicisolation

Where the distance between two anchorages is less than 0.3 times the total depth, or breadth, of the member, consideration shall be given to the effects of the pair acting in a manner similar to a single anchorage subject to the combined forces.

12.2.4 Calculation of tensile forces along line of an anchorage force

The force resultant of transverse tensile stresses induced along the line of action of an anchorage force shall be taken as:

$$T = 0.25P(1 - k_r)$$

where

P = the maximum force occurring at the anchorage during jacking

k_r = the ratio of the depth, or breadth, of an anchorage bearing plate to the corresponding depth, or breadth, of the symmetrical prism

The symmetrical prism is defined as a notional prism with an anchorage at the centre of its end face and a depth, or breadth, taken as twice the distance from the centre of an anchorage to the nearer concrete face.

12.2.5 Calculation of tensile forces induced near the loaded face

At longitudinal sections remote from a single eccentric anchorage, or between widely spaced anchorages, where the sense of the transverse moment indicates that the tensile stress resultant acts near the loaded face, the tensile force shall be calculated as follows:

(a) For a single eccentric anchorage, by dividing the peak transverse moment by a lever arm assumed to be one half the overall depth of the member.

(b) Between pairs of anchorages, by dividing the peak transverse moment by a lever arm assumed to be 0.6 times the spacing of the anchorages.

12.2.6 Quantity and distribution of reinforcement

The cross-sectional area of reinforcement for each situation shall be calculated by dividing the tensile forces derived in accordance with Clauses 12.2.4 and 12.2.5 by 150 MPa. This reinforcement shall be distributed as follows:

(a) Reinforcement to resist the forces calculated under Clause 12.2.4 distributed uniformly from $0.2D$ to $1.0D$ from the loaded face. Similar reinforcement shall be placed from the plane at $0.2D$ to as near as practicable to the loaded face. D shall be equal to the depth or breadth of the symmetrical prism as appropriate.

(b) Reinforcement to resist the forces calculated under Clause 12.2.5 placed as close to the loaded face as is consistent with cover and compaction requirements.

At any plane parallel to the loaded face, the reinforcement shall be determined from the longitudinal section with the greatest reinforcement requirements at that plane, and shall extend over the full depth or breadth of the end zone.

12.3 BEARING SURFACES

Unless special confinement reinforcement is provided, the design bearing stress at a concrete surface shall not exceed $\phi 0.85 f'_c \sqrt{(A_2 / A_1)}$, or $\phi 2 f'_c$, whichever is less,

where

A_2 = the largest area of the supporting surface that is geometrically similar to and concentric with A_1

A_1 = the bearing area

Accessed by SWINBURNE UNIVERSITY OF TECHNOLOGY on 15 Aug 2007

@Seismicisolation

@Seismicisolation

In the case of a bearing surface where the supporting structure is sloped or stepped, it shall be permissible to take A_2 as the area of the base of the largest frustum of a right pyramid or cone—

(a) having for its opposite end the bearing area A_1;

(b) having side slopes of 1 longitudinally to 2 transversely, with respect to the direction of the load; and

(c) contained wholly within the supporting structure.

Accessed by SWINBURNE UNIVERSITY OF TECHNOLOGY on 15 Aug 2007

@Seismicisolation

@Seismicisolation

SECTION 13 STRESS DEVELOPMENT AND SPLICING OF REINFORCEMENT AND TENDONS

13.1 STRESS DEVELOPMENT IN REINFORCEMENT

13.1.1 General

The calculated force in reinforcing steel at any cross-section shall be developed on each side of that cross-section in accordance with Clauses 13.1.2 to 13.1.7.

13.1.2 Development length for bar in tension

13.1.2.1 *Development length to develop yield strength*

The development length ($L_{sy.t}$) to develop the yield strength (f_{sy}) of a bar in tension shall be calculated as follows:

(a) For all deformed bars:

$$L_{sy.t} = \frac{k_1 k_2 f_{sy} A_b}{(2a + d_b)\sqrt{f'_c}} \geq 25 k_1 d_b$$

where

k_1 = 1.25 for a horizontal bar with more than 300 mm of concrete cast below the bar; or

= 1.0 for all other bars

k_2 = 1.7 for bars in slabs and walls if the clear distance between adjacent parallel bars developing stress is not less than 150 mm

= 2.2 for longitudinal bars in beams and columns with fitments

= 2.4 for any other longitudinal bar

A_b = the cross-sectional area of the reinforcing bar

$2a$ = twice the cover to the deformed bar or the clear distance between adjacent parallel bars developing stress, whichever is less

(b) For plain bars used as fitments, where $d_b < 13$ mm,

$L_{sy.t} = 40 d_b$ but not less than 300 mm:

(c) For hard-drawn wire:

$$L_{sy.t} = 50 d_b$$

13.1.2.2 *Development length to develop less than yield strength*

The development length (L_{st}) to develop a tensile stress (σ_{st}) less than the yield strength (f_{sy}) shall be calculated from—

$$L_{st} = L_{sy.t} \sigma_{st} / f_{sy}$$

but shall be not less than—

(a) 12 d_b; or

(b) for slabs, as permitted by Clause 9.1.3.1(a)(ii).

Accessed by SWINBURNE UNIVERSITY OF TECHNOLOGY on 15 Aug 2007

@Seismicisolation

@Seismicisolation

13.1.2.3 *Development length around a curve*

Tensile stress may be considered to be developed around a curve if the internal diameter of the curve is $10d_b$ or greater.

13.1.2.4 *Development length of a bar with a standard hook*

Where a bar ends in a standard hook complying with Clause 13.1.2.5, the tensile development length of that end of the bar, measured from the outside of the hook, shall be taken as $0.5L_{sy.t}$ or $0.5L_{st}$ as applicable.

13.1.2.5 *Standard hooks*

The standard hook referred to in Clause 13.1.2.4, shall be one of the following—

(a) a hook consisting of a 135° or 180° bend with a nominal internal diameter complying with Clause 19.2.3.2 plus a straight extension of $4d_b$ or 70 mm whichever is greater; or

(b) a cog, consisting of a 90° bend with a nominal internal diameter complying with Clause 19.2.3.2 but not greater than $8d_b$ and having the same total length as required for a 180° hook of the same diameter bar.

13.1.2.6 *Development of headed reinforcement*

If the cross-sectional area of the head of the headed reinforcement or the area of the end plate for bars mechanically anchored with an end plate (see Clause 13.1.6), in the plane perpendicular to the axis of the bar, is at least 10 times the cross-sectional area of the bar, the bar shall be considered as fully anchored.

13.1.2.7 *Development length of plain bars*

The development length of plain bars shall rely on standard hooks as defined in Clause 13.1.2.5 except that the straight extension shall be the greater of $8d_b$ or 140 mm.

13.1.3 Development length for a bar in compression

The development length ($L_{sy.c}$) to develop the yield strength (f_{sy}) in compression in a deformed bar shall be taken as $20d_b$.

A bend or a standard hook shall not be considered effective in developing stress in reinforcement in compression.

13.1.4 Development length of bundled bars

The development length of a unit of bundled bars shall be based on the development length required for the largest bar within the bundle increased by—

(a) for a 3-bar bundle .....20%; and

(b) for a 4-bar bundle ..... 33%.

13.1.5 Development length of mesh in tension

The development length in tension for longitudinal wires of welded wire mesh shall be deemed to be provided by an embedment of at least two transverse wires so that the closer one is not less than 25 mm from the critical section concerned.

13.2 SPLICING OF REINFORCEMENT

13.2.1 General

The following general requirements shall apply to the splicing of reinforcement:

(a) Splices of reinforcement shall be made only as required or permitted on the design drawings or in specifications.

Accessed by SWINBURNE UNIVERSITY OF TECHNOLOGY on 15 Aug 2007

@Seismicisolation

@Seismicisolation

(b) The splice shall be made by welding, by mechanical means, by end-bearing, or by lapping.

(c) Splicing of reinforcement shall take into account the requirements of Clause 19.1.3 regarding the placement of concrete.

(d) Splices required in bars in tension tie members shall be made only by welding or mechanical means.

(e) Lapped splices shall not be used for bars in compression with diameter larger than 40 mm and for bars in tension with diameter larger than 32 mm.

(f) Welding of reinforcing bars shall not be made less than $3d_b$ from that part of a bar that has been bent and re-straightened.

13.2.2 Lapped splices for bars in tension

The lap length for splices for bars in tension shall be not less than the development length, ($L_{sy.t}$) given in Clause 13.1.2.1.

13.2.3 Lapped splices for mesh in tension

A lapped splice for welded wire mesh in tension shall be made so that the two outermost transverse wires of one sheet of mesh overlap the two outermost transverse wires of the sheet being lapped as shown in Figure 13.2.3.

FIGURE 13.2.3 LAPPED SPLICES FOR MESH

13.2.4 Lapped splices for bars in compression

The minimum length of a lapped splice for deformed bars in compression shall be the development length in compression ($L_{sy.c}$) given in Items (a), (b) or (c), as appropriate, but shall be not less than 300 mm, as follows:

(a) The development length in compression shall be in accordance with Clause 13.1.3 but not less than $0.07f_{sy}\,d_b$ for f_{sy} of 400 MPa or less, or $(0.125\,f_{sy} - 22)d_b$ for f_{sy} greater than 400 MPa.

(b) In compression members with stirrups or ties where at least 3 sets of ties are present over the length of the lap and $A_{tr}/s \geq A_b/1000$, a lap length of 0.8 times the value given in Item (a).

(c) In helically tied compression members, if at least 3 turns of helix are present over the length of the lap and $A_{tr}/s \geq n\,A_b/6000$, a lap length of 0.8 times the value given in Item (a).

In this Clause, A_b is defined as the area of the bar being spliced.

Accessed by SWINBURNE UNIVERSITY OF TECHNOLOGY on 15 Aug 2007

@Seismicisolation

@Seismicisolation

13.2.5 Lapped splices for bundled bars

Lapped splices for a unit of bundled bars shall be based on the lap splice length required for the largest bar within the bundle increased by —

(a) for a 3-bar bundle ..... 20%; and

(b) for a 4-bar bundle ..... 33%.

Individual bar splices within a bundle shall not overlap.

13.3 STRESS DEVELOPMENT IN TENDONS

13.3.1 General

The calculated force in tendons at any cross-section shall be developed on each side of that cross-section in accordance with Clause 13.3.2 or Clause 13.3.3.

13.3.2 Development length of pretensioned tendons

In the absence of substantiated test data, the development length (L_p) of pretensioned tendons for gradual release shall be taken as the transmission length given in Table 13.3.2, as appropriate to type of tendon and the strength of the concrete at transfer (f_{cp}).

Where strand or wire is untensioned, the development length shall be taken as not less than 1.5 times the value given in Table 13.3.2, as appropriate.

It shall be assumed that no change in the position of the inner end of the transmission length occurs with time but that a completely unstressed zone of length $0.1L_p$ develops at the end of the tendon.

TABLE 13.3.2

MINIMUM TRANSMISSION LENGTH FOR PRETENSIONED TENDONS

Type of tendon	L_p for gradual release	
	$f_{cp} \geq 32$ MPa	$f_{cp} < 32$ MPa
Indented wire	100 d_b	175 d_b
Crimped wire	70 d_b	100 d_b
Regular, super and compact strand	60 d_b	60 d_b

NOTES:

1 Sudden release of a tendon at transfer may cause large increases above the values tabulated.

2 The transmission lengths towards the top of a member may be as much as twice the values tabulated.

13.3.3 Stress development in post-tensioned tendons by anchorages

Anchorages for tendons shall be capable of developing in the tendon the minimum tensile strength (f_p).

In addition, anchorages for unbonded tendons shall be capable of sustaining cyclic loading conditions.

13.4 COUPLING OF TENDONS

Coupling of tendons shall comply with the following:

(a) Couplers shall be capable of developing the minimum tensile strength (f_p).

(b) Couplers shall be enclosed in housings of sufficient length to permit the necessary movements and to facilitate grouting of the duct.

Accessed by SWINBURNE UNIVERSITY OF TECHNOLOGY on 15 Aug 2007

@Seismicisolation

@Seismicisolation

SECTION 14 JOINTS, EMBEDDED ITEMS, FIXINGS AND CONNECTIONS

14.1 DESIGN OF JOINTS

14.1.1 Construction joints

A construction joint, including a joint between precast segments, in a part of a structure or member shall be designed and constructed so that the load-carrying capacity and serviceability of the structure or member will be unimpaired by the inclusion of the joint.

14.1.2 Movement joints

A movement joint in a part of a structure or member shall be designed and constructed so that the assessed relative movement or rotation, between the parts of the structure or member on either side of the joint, can occur without impairing the load-carrying capacity and serviceability of the structure or member.

14.2 EMBEDDED ITEMS AND HOLES IN CONCRETE

14.2.1 General

Embedded items and holes shall be permitted in concrete members provided that the required strength and serviceability of the member is satisfied.

For the purpose of this Clause embedded items include pipes and conduits with their associated fittings, sleeves, permanent inserts for fixings and other purposes, holding-down bolts, bar chairs and other supports.

For the purpose of this Clause, holes include holes through a member, holes along the length of a member, rebates, and penetrations.

14.2.2 Limitation on materials

The materials to be embedded shall comply with the following requirements, as appropriate:

(a) Conduits and pipes used for electrical purposes shall comply with the relevant requirements of AS/NZS 3000.

(b) Other embedded items shall be protected from corrosion or deterioration.

(c) Metals such as aluminium shall not be embedded in structural concrete unless effectively coated, covered, or treated to prevent chemical action between the metal and the concrete and electrolytic action between the metal and steel.

14.2.3 Pipes containing liquid, gas or vapour

Pipes that are intended to contain liquid, gas or vapour under pressure or extremes of temperature may be embedded in structural concrete, provided that—

(a) the maximum pressure to which any piping or fitting is intended to be subjected shall not exceed 2000 kPa; and

(b) the effect that inclusion of the pipe has on the strength and serviceability behaviour of the member, is taken into account.

14.2.4 Spacing and cover

The minimum clear distance between embedded items and between embedded items and bars (including bundled bars), tendons, or ducts, shall be sufficient to ensure that the concrete can be placed and compacted to comply with Clause 19.1.3.

The cover to embedded items that are not corrosion resistant shall comply with Section 4.

Accessed by SWINBURNE UNIVERSITY OF TECHNOLOGY on 15 Aug 2007

@Seismicisolation

@Seismicisolation

14.3 REQUIREMENTS FOR FIXINGS

Fixings, including holding-down bolts, inserts and ferrules, shall comply with the following:

(a) A fixing shall be designed to transmit all forces, acting or likely to act on it.

(b) Forces on fixings used for lifting purposes shall include an impact factor in assessing the load.

(c) Fixings shall be designed to yield before ultimate failure in the event of overload.

(d) The anchorage of any fixings shall be designed in accordance with Section 13, as appropriate. The design strength of this anchorage shall be taken as ϕ times the ultimate strength where $\phi = 0.5$. In the case of shallow anchorages, cone-type failure in the concrete surrounding the fixing shall be investigated taking into account edge distance, spacing, the effect of reinforcement, if any, and concrete strength at time of loading.

(e) In the absence of calculations, the strength of a fixing shall be determined by load testing of a prototype to failure in accordance with Appendix B, Paragraph B4. The design strength of the fixing shall be taken as ϕ times the ultimate strength where the ultimate strength is taken as the average failure load divided by the appropriate factor given in Table B4.3 and $\phi = 0.6$.

(f) The spacing between, and cover to fixings shall be in accordance with Clause 14.2.4. The cover for fire resistance shall be in accordance with Section 5.

Fixings that are intended for lifting purposes shall have a ratio of ultimate strain to either yield strain or proportional limit strain of not less than 3.

14.4 CONNECTIONS

Monolithic connections between structural members shall be detailed to transmit the design action effects including allowance for any possible reversals of actions or action effects.

Accessed by SWINBURNE UNIVERSITY OF TECHNOLOGY on 15 Aug 2007

@Seismicisolation

@Seismicisolation

SECTION 15 PLAIN CONCRETE MEMBERS

15.1 APPLICATION

Plain concrete shall be used only for members in which a crack will not induce collapse. The requirements of this Section may be applied to plain concrete floors and pavements resting on the ground, footings and bored piers.

15.2 DESIGN

15.2.1 Basic principles of strength design

Members shall be designed in accordance with the following basic principles:

(a) Design of members for flexure shall be based on a linear stress-strain relationship in both tension and compression.

(b) The tensile strength of concrete may be considered in the design.

(c) No strength shall be assigned to reinforcement that may be present.

15.2.2 Section properties

In the calculation of strength, the entire cross-section of a member shall be considered except that for a member cast against soil, the overall relevant dimension shall be taken as 50 mm less than the actual dimension.

15.3 STRENGTH IN BENDING

The design strength of a member in bending shall be taken as ϕM_{uo}, where M_{uo} is calculated using the characteristic flexural tensile strength (f'_{cf}).

15.4 STRENGTH IN SHEAR

15.4.1 One-way action

Where the member acts essentially as a one-way member, and a shear failure can occur across the width, b, of the member, the design strength in shear shall be taken as ϕV_u where:

$$V_u = 0.15bD(f'_c)^{1/3}$$

The maximum shear shall be taken to occur at a distance $0.5D$ from the face of a support.

15.4.2 Two-way action

Where a shear failure can occur locally around a support or loaded area, the design strength in shear shall be taken as—

$$\phi V_u \,/\, \left[1 + (uM^* \;/ 8V^* aD\right]$$

where

$$V_u = 0.1uD(1 + 2/\beta_h)\sqrt{f'_c} \le 0.2uD\sqrt{f'_c}$$

and

u = the effective length of the critical shear perimeter (see Figure 9.2.1(A))

a = the dimension of the critical shear perimeter, which is parallel to the direction of bending being considered (see Figure 9.2.1(B)).

β_h = the ratio given in Clause 9.2.1

@Seismicisolation

Accessed by SWINBURNE UNIVERSITY OF TECHNOLOGY on 15 Aug 2007

@Seismicisolation

15.5 STRENGTH IN AXIAL COMPRESSION

The design strength under axial compression of a member, other than a wall, shall be taken as ϕN_{uo},

where—

$$N_{uo} = 0.45 f_c' A_g$$

provided that the unsupported length of the member is not greater than three times the least lateral dimension, except that this restriction does not apply to bored piers cast in-situ.

15.6 STRENGTH IN COMBINED BENDING AND COMPRESSION

In the absence of more exact calculations, members subject to combined bending and axial load shall be designed so that—

$$\frac{M^*_x}{\phi M_{ux}} + \frac{M^*_y}{\phi M_{uy}} + \frac{N^*}{\phi N_u} \leq 1$$

Accessed by SWINBURNE UNIVERSITY OF TECHNOLOGY on 15 Aug 2007

@Seismicisolation

@Seismicisolation

NOTES

Accessed by SWINBURNE UNIVERSITY OF TECHNOLOGY on 15 Aug 2007

@Seismicisolation

@Seismicisolation

CHAPTER 2

STEEL STRUCTURES

This Chapter consists of edited extracts from AS 4100—1998, *Steel structures*. The Standard applies to the design, fabrication and erection of steel work in buildings and in principle to other structures such as cranes.

Accessed by SWINBURNE UNIVERSITY OF TECHNOLOGY on 15 Aug 2007

@Seismicisolation

@Seismicisolation

STANDARDS AUSTRALIA

Australian Standard

Steel structures

SECTION 1 SCOPE AND GENERAL

1.1 SCOPE AND APPLICATION

1.1.1 Scope This Standard sets out minimum requirements for the design, fabrication, erection, and modification of steelwork in structures in accordance with the limit states design method.

This Standard applies to buildings, structures and cranes constructed of steel.

This Standard is intended to apply also to roadway, railway, and pedestrian bridges. However, the requirements given in this Standard may not always be sufficient for bridge applications. In these circumstances, the specifications of the relevant Authority shall be used.

This Standard does not apply to the following structures and materials:

(a) Steel elements less than 3 mm thick, with the exception of sections complying with AS 1163 and packers.

(b) Steel members for which the value of the yield stress used in design (f_y) exceeds 450 MPa.

(c) Cold-formed members, other than those complying with AS 1163, which shall be designed in accordance with AS/NZS 4600.

(d) Composite steel-concrete members, which shall be designed in accordance with AS 2327.

NOTE: The general principles of design, fabrication, erection, and modification embodied in this Standard may be applied to steel-framed structures or members not specifically mentioned herein.

1.1.2 Application This Standard will be referenced in the Building Code of Australia by way of BCA Amendment No. 3 to be published by 1 July 1998, thereby superseding the previous edition, AS 4100—1990, which will be withdrawn 12 months from the date of publication of this edition.

1.2 REFERENCED DOCUMENTS The documents referred to in this Standard are listed in Appendix A.

1.3 DEFINITIONS For the purpose of this Standard, the definitions below apply. Definitions peculiar to a particular Clause or Section are also given in that Clause or Section.

Action—the cause of stress or deformations in a structure.

Action effect or load effect—the internal force or bending moment due to actions or loads.

Authority—a body having statutory powers to control the design and erection of a structure.

Bearing-type connection—connection effected using either snug-tight bolts, or high-strength bolts tightened to induce a specified minimum bolt tension, in which the design action is transferred by shear in the bolts and bearing on the connected parts at the strength limit state.

Bearing-wall system—see AS 1170.4.

Braced frame—see AS 1170.4.

Braced member—one for which the transverse displacement of one end of the member relative to the other is effectively prevented.

Building frame system—see AS 1170.4.

Accessed by SWINBURNE UNIVERSITY OF TECHNOLOGY on 15 Aug 2007

@Seismicisolation

@Seismicisolation

Capacity factor—a factor used to multiply the nominal capacity to obtain the design capacity.

Complete penetration butt weld—a butt weld in which fusion exists between the weld and parent metal throughout the complete depth of the joint.

Concentric braced frame—see AS 1170.4.

Constant stress range fatigue limit—highest constant stress range for each detail category at which fatigue cracks are not expected to propagate (see Figure 11.6.1).

Cut-off limit—for each detail category, the highest variable stress range which does not require consideration when carrying out cumulative damage calculations (see Figures 11.6.1 and 11.6.2).

Design action effect or design load effect—the action or load effect computed from the design actions or design loads.

Design action or design load—the combination of the nominal actions or loads and the load factors, as specified in AS 1170.1, AS 1170.2, AS 1170.3 or AS 1170.4.

Design capacity—the product of the nominal capacity and the capacity factor.

Design life—period over which a structure or structural element is required to perform its function without repair.

Design resistance effect—the resistance effect computed from the loads and design capacities contributing towards the stability limit state resistance.

Design spectrum—sum of the stress spectra from all of the nominal loading events expected during the design life.

Detail category—designation given to a particular detail to indicate which of the S-N curves is to be used in the fatigue assessment.

Discontinuity—an absence of material, causing a stress concentration.

Drift—see AS 1170.4.

Dual system—see AS 1170.4.

Ductility—see AS 1170.4.

Earthquake design category—see AS 1170.4.

Earthquake resisting system—see AS 1170.4.

Eccentric braced frame—see AS 1170.4.

Exposed surface area to mass ratio—the ratio of the surface area exposed to the fire to the mass of steel.

Fatigue—damage caused by repeated fluctuations of stress leading to gradual cracking of a structural element.

Fatigue loading—set of nominal loading events described by the distribution of the loads, their magnitudes and the numbers of applications of each nominal loading event.

Fatigue strength—the stress range defined in Clause 11.6 for each detail category (see Figures 11.6.1 and 11.6.2) varying with the number of stress cycles.

Fire exposure condition—

(a) *three-sided fire exposure condition*—steel member incorporated in or in contact with a concrete or masonry floor or wall.

(b) *four-sided fire exposure condition*—a steel member exposed to fire on all sides.

Fire protection system—the fire protection material and its method of attachment to the steel member.

Fire-resistance level (FRL)—the fire-resistance grading period for structural adequacy only, in minutes, which is required to be attained in the standard fire test.

Accessed by SWINBURNE UNIVERSITY OF TECHNOLOGY on 15 Aug 2007

@Seismicisolation

@Seismicisolation

Friction-type connection—connection effected using high-strength bolts tightened to induce a specified minimum bolt tension such that the resultant clamping action transfers the design shear forces at the serviceability limit state acting in the plane of the common contact surfaces by the friction developed between the contact surfaces.

Full tensioning—a method of installing and tensioning a bolt in accordance with Clauses 15.2.4 and 15.2.5.

Geometrical slenderness ratio—the geometrical slenderness ratio (l_e/r), taken as the effective length (l_e), specified in Clause 6.3.2, divided by the radius of gyration (r) computed for the gross section about the relevant axis.

Incomplete penetration butt weld—a butt weld in which the depth of penetration is less than the complete depth of the joint.

In-plane loading—loading for which the design forces and bending moments are in the plane of the connection, so that the design action effects induced in the connection components are shear forces only.

Intermediate moment resisting frame—see AS 1170.4.

Length (of a compression member)—the actual length (l) of an axially loaded compression member, taken as the length centre-to-centre of intersections with supporting members, or the cantilevered length in the case of a free-standing member.

Limit state—any limiting condition beyond which the structure ceases to fulfil its intended function.

Load—an externally applied force.

Miner's summation—cumulative damage calculation based on the Palmgren-Miner summation or equivalent.

Moment resisting frame system—see AS 1170.4.

Nominal action or load—an action or load, as specified in Clause 3.2.1 or 3.2.2.

Nominal capacity—the capacity of a member or connection computed using the parameters specified in this Standard.

Nominal loading event—the loading sequence for the structure or structural element.

Non-slip fasteners—fasteners which do not allow slip to occur between connected plates or members at the serviceability limit state so that the original alignment and relative positions are maintained.

Ordinary moment resisting frame—see AS 1170.4.

Out-of-plane loading—loading for which the design forces or bending moments result in design action effects normal to the plane of the connection.

Period of structural adequacy (PSA) (fire)—the time (t), in minutes, for the member to reach the limit state of structural adequacy in the standard fire test.

Pin—an unthreaded fastener manufactured out of round bar.

Plastic hinge—a yielding zone with significant inelastic rotation which forms in a member when the plastic moment is reached.

Prequalified weld preparation—a joint preparation prequalified in terms of AS/NZS 1554.1.

Proof testing—the application of test loads to a structure, sub-structure, member or connection to ascertain the structural characteristics of only that one unit under test.

Prototype (fire)—a test specimen representing a steel member and its fire protection system which is subjected to the standard fire test.

Prototype testing—the application of test loads to one or more structures, sub-structures, members or connections to ascertain the structural characteristics of that class of structures, sub-structures, members or connections which are nominally identical to the units tested.

Accessed by SWINBURNE UNIVERSITY OF TECHNOLOGY on 15 Aug 2007

@Seismicisolation

@Seismicisolation

Prying force—additional tensile force developed as a result of the flexing of a connection component in a connection subjected to tensile force. External tension force reduces the contact pressure between the component and the base, and bending in part of the component develops a prying force near the edge of the connection component.

Segment (in a member subjected to bending)—the length between adjacent cross-sections which are fully or partially restrained, *or* the length between an unrestrained end and the adjacent cross-section which is fully or partially restrained.

Serviceability limit state—a limit state of acceptable in-service condition.

Shear wall—a wall designed to resist lateral forces parallel to the plane of the wall.

S-N curve—curve defining the limiting relationship between the number of stress cycles and stress range for a detail category.

Snug tight—the tightness of a bolt achieved by a few impacts of an impact wrench or by the full effort of a person using a standard podger spanner.

Space frame—see AS 1170.4.

Special moment resisting frame—see AS 1170.4.

Stability limit state—a limit state corresponding to the loss of static equilibrium of a structure considered as a rigid body.

Standard fire test—the fire-resistance test specified in AS 1530.4.

Stickability—the ability of the fire protection system to remain in place as the member deflects under load during a fire test.

Strength limit state—a limit state of collapse or loss of structural integrity.

Stress cycle—one cycle of stress defined by stress cycle counting.

Stress cycle counting method—any rational method used to identify individual stress cycles from the stress history.

Stress range—algebraic difference between two extremes of stress.

Stress spectrum—histogram of the stress cycles produced by a nominal loading event.

Structural adequacy (fire)—the ability of the member exposed to the standard fire test to carry the test load specified in AS 1530.4.

Sway member—one for which the transverse displacement of one end of the member relative to the other is not effectively prevented.

Tensile strength—the minimum ultimate strength in tension specified for the grade of steel in the appropriate Australian Standard.

Yield stress—the minimum yield stress in tension specified for the grade of steel in the appropriate Australian Standard.

1.4 NOTATION Symbols used in this Standard are listed below.

Where non-dimensional ratios are involved, both the numerator and denominator are expressed in identical units.

The dimensional units for length and stress in all expressions or equations are to be taken as millimetres (mm) and megapascals (MPa) respectively, unless specifically noted otherwise.

A superscripted '*' placed after a symbol denotes a design action effect due to the design load for the strength limit state.

A = area of cross-section

A_c = minor diameter area of a bolt, as defined in AS 1275

A_e = effective area of a cross-section; *or*

= area enclosed by a hollow section

Accessed by SWINBURNE UNIVERSITY OF TECHNOLOGY on 15 Aug 2007

@Seismicisolation

@Seismicisolation

A_{ep}	=	area of an end plate
A_{fc}	=	flange area at critical cross-section
A_{fg}	=	gross area of a flange
A_{fm}	=	flange area at minimum cross-section; *or*
	=	lesser of the flange effective areas
A_{fn}	=	net area of a flange
A_g	=	gross area of a cross-section
A_n	=	net area of a cross-section; *or*
	=	sum of the net areas of the flanges and the gross area of the web
A_o	=	plain shank area of a bolt
A_p	=	cross-sectional area of a pin
A_s	=	tensile stress area of a bolt as defined in AS 1275; *or*
	=	area of a stiffener or stiffeners in contact with a flange; *or*
	=	area of an intermediate web stiffener
A_w	=	gross sectional area of a web; *or*
	=	effective shear area of a plug or slot weld
a_e	=	minimum distance from the edge of a hole to the edge of a ply measured in the direction of the component of a force plus half the bolt diameter
a_o	=	length of unthreaded portion of the bolt shank contained within the grip
a_t	=	length of threaded portion of the bolt contained within the grip
a_0, a_1	=	out-of-square dimensions of flanges
a_2, a_3	=	diagonal dimensions of a box section
b	=	width; *or*
	=	lesser dimension of a web panel; *or*
	=	clear width of an element outstand from the face of a supporting plate element; *or*
	=	clear width of a supported element between faces of supporting plate elements
b_b, b_{bf}, b_{bw}, b_o	=	bearing widths defined in Clause 5.13
b_d	=	distance from the stiff bearing to the end of the member
b_e	=	effective width of a plate element
b_{es}	=	stiffener outstand from the face of a web
b_f	=	width of a flange
b_{fo}	=	distance from mid-plane of the web to the nearer edge of the flange; *or*
	=	half the clear distance between the webs
b_s	=	stiff bearing length
b_w	=	web depth
b_1, b_2	=	greater and lesser leg lengths of an angle section
C_3, C_4, C_{4r}	=	factors given in Table H3 and Paragraph H5
c_h	=	perpendicular distance to centroid of an angle section from the face of the loaded leg of the angle
c_m	=	factor for unequal moments

Accessed by SWINBURNE UNIVERSITY OF TECHNOLOGY on 15 Aug 2007

@Seismicisolation

@Seismicisolation

d	=	depth of a section; *or*
	=	depth of preparation for incomplete penetration butt weld; *or*
	=	maximum cross-sectional dimension of a member
d_b	=	lateral distance between centroids of the welds or fasteners on battens
d_c	=	depth of a section at a critical cross-section
d_e	=	effective outside diameter of a circular hollow section; *or*
	=	factor defined in Appendix I
d_f	=	diameter of a fastener (bolt or pin); *or*
	=	distance between flange centroids
d_m	=	depth of a section at minimum cross-section
d_o	=	overall section depth including out-of-square dimensions; *or*
	=	overall section depth of a segment; *or*
	=	outside diameter of a circular hollow section
d_p	=	clear transverse dimension of a web panel; *or*
	=	depth of deepest web panel in a length
d_x, d_y	=	distances of the extreme fibres from the neutral axes
d_1	=	clear depth between flanges ignoring fillets or welds
d_2	=	twice the clear distance from the neutral axis to the compression flange
d_3, d_4	=	depths of preparation for incomplete penetration butt welds
d_5	=	flat width of web
E	=	Young's modulus of elasticity, 200×10^3 MPa
$E(T)$, $E(20)$	=	E at T, 20 degrees Celsius respectively
e	=	eccentricity; *or*
	=	web off-centre dimension; *or*
	=	distance between an end plate and a load-bearing stiffener
e_c, e_t	=	eccentricities of compression and tension angles (Clause 8.4.6)
F	=	action in general, force or load
F^*	=	total design load on a member between supports
F_n^*	=	design force normal to a web panel
F_p^*	=	design force parallel to a web panel
f_c	=	fatigue strength corrected for thickness of material
f_f	=	uncorrected fatigue strength
f_{rn}	=	detail category reference fatigue strength at n_r cycles—normal stress
f_{rnc}	=	corrected detail category reference fatigue strength—normal stress
f_{rsc}	=	corrected detail category reference fatigue strength—shear stress
f_{rs}	=	detail category reference fatigue strength at n_r cycles—shear stress
f_u	=	tensile strength used in design
f_{uf}	=	minimum tensile strength of a bolt
f_{up}	=	tensile strength of a ply
f_{uw}	=	nominal tensile strength of weld metal

Accessed by SWINBURNE UNIVERSITY OF TECHNOLOGY on 15 Aug 2007

@Seismicisolation

@Seismicisolation

f_y	=	yield stress used in design
$f_y(T)$, $f_y(20)$	=	yield stresses of steel at T, 20 degrees Celsius respectively
f_{yp}	=	yield stress of a pin used in design
f_{ys}	=	yield stress of a stiffener used in design
f_3	=	detail category fatigue strength at constant amplitude fatigue limit
f_{3c}	=	corrected detail category fatigue strength at constant amplitude fatigue limit
f_5	=	detail category fatigue strength at cut-off limit
f_{5c}	=	corrected detail category fatigue strength at cut-off limit
f^*	=	design stress range
f_i^*	=	design stress range for loading event i
f_{va}^*	=	average design shear stress in a web
f_{vm}^*	=	maximum design shear stress in a web
f_w^*	=	equivalent design stress on a web panel (Appendix I)
G	=	shear modulus of elasticity, 80×10^3 MPa; *or*
	=	nominal dead load
h	=	rectangular centroidal axis for angle parallel to the loaded leg
h_b	=	vertical distance between tops of beams
h_e	=	effective thickness of fire protection material
h_i	=	thickness of fire protection material
h_s	=	storey height
I	=	second moment of area of a cross-section
I_{cy}	=	second moment of area of compression flange about the section minor principal y-axis
I_m	=	I of the member under consideration
I_r	=	I of a restraining member
I_s	=	I of a pair of stiffeners or a single stiffener
I_w	=	warping constant for a cross-section
I_x	=	I about the cross-section major principal x-axis
I_y	=	I about the cross-section minor principal y-axis
i	=	number of loading event
J	=	torsion constant for a cross-section
K	=	$\sqrt{[\pi^2 EI_w/(GJL^2)]}$
K_d	=	deflection amplification factor
k	=	coefficient used in Appendix J
k_b	=	elastic buckling coefficient for a plate element
k_{bo}	=	basic value of k_b
k_e	=	member effective length factor
k_f	=	form factor for members subject to axial compression
k_h	=	factor for different hole types
k_l	=	load height effective length factor

Accessed by SWINBURNE UNIVERSITY OF TECHNOLOGY on 15 Aug 2007

@Seismicisolation

@Seismicisolation

k_p	=	factor for pin rotation
k_r	=	effective length factor for restraint against lateral rotation; *or*
	=	effective length factor for a restraining member; *or*
	=	reduction factor to account for the length of a bolted or welded lap splice connection
k_s	=	ratio used to calculate α_p and α_{pm}
k_{sm}	=	exposed surface area to mass ratio
k_t	=	twist restraint effective length factor; *or*
	=	correction factor for distribution of forces in a tension member
k_v	=	ratio of flat width of web (d_5) to thickness (t) of section
k_0-k_6	=	regression coefficients (Section 12)
l	=	span; *or*
	=	member length; *or*
	=	segment or sub-segment length
l_b	=	length between points of effective bracing or restraint
l_c	=	distance between adjacent column centres
l_e	=	effective length of a compression member; *or*
	=	effective length of a laterally unrestrained member
$\frac{l_e}{r}$	=	geometrical slenderness ratio
$\left(\frac{l_e}{r}\right)_{bn}$	=	slenderness ratio of a battened compression member about the axis normal to the plane of the battens
$\left(\frac{l_e}{r}\right)_{bp}$	=	slenderness ratio of a battened compression member about the axis parrallel to the plane of the battens
$\left(\frac{l_e}{r}\right)_{c}$	=	slenderness ratio of the main component in a laced or battened compression member
$\left(\frac{l_e}{r}\right)_{m}$	=	slenderness ratio of the whole battened compression member
l_j	=	length of a bolted lap splice connection
l_m	=	length of the member under consideration
l_r	=	length of a restraining member; *or*
	=	length of a segment over which the cross-section is reduced
l_s	=	distance between points of effective lateral support
l_w	=	greatest internal dimension of an opening in a web; *or*
	=	length of a fillet weld in a welded lap splice connection
l_z	=	distance between partial or full torsional restraints
M_b	=	nominal member moment capacity
M_{bx}	=	M_b about major principal x-axis
M_{bxo}	=	M_{bx} for a uniform distribution of moment
M_{cx}	=	lesser of M_{ix} and M_{ox}

Accessed by SWINBURNE UNIVERSITY OF TECHNOLOGY on 15 Aug 2007

@Seismicisolation

@Seismicisolation

M_f = nominal moment capacity of flanges alone

M_i = nominal in-plane member moment capacity

M_{ix} = M_i about major principal *x*-axis

M_{iy} = M_i about minor principal *y*-axis

M_o = nominal out-of-plane member moment capacity; *or*

= reference elastic buckling moment for a member subject to bending

M_{oa} = amended elastic buckling moment for a member subject to bending

M_{ob} = elastic buckling moment determined using an elastic buckling analysis

M_{obr} = M_{ob} decreased for elastic torsional end restraint

M_{oo} = reference elastic buckling moment obtained using $l_e = l$

M_{os} = M_{ob} for a segment, fully restrained at both ends, unrestrained against lateral rotation and loaded at shear centre

M_{ox} = nominal out-of-plane member moment capacity about major principal *x*-axis

M_p = nominal moment capacity of a pin

M_{pr} = nominal plastic moment capacity reduced for axial force

M_{prx} = M_{pr} about major principal *x*-axis

M_{pry} = M_{pr} about minor principal *y*-axis

M_{rx} = M_s about major principal *x*-axis reduced by axial force

M_{ry} = M_s about minor principal *y*-axis reduced by axial force

M_s = nominal section moment capacity

M_{sx} = M_s about major principal *x*-axis

M_{sy} = M_s about minor principal *y*-axis

M_{tx} = lesser of M_{rx} and M_{ox}

M_w = nominal section moment capacity of a web panel

M^* = design bending moment

M_e^* = second-order or amplified end bending moment

M_f^* = design end bending moment

M_{fb}^* = braced component of M_f^* obtained from a first-order elastic analysis of a frame with sway prevented

M_{fs}^* = sway component of M_f^* obtained from $(M_f^* - M_{fb}^*)$

M_h^* = design bending moment on an angle, acting about the rectangular *h*-axis parallel to the loaded leg

M_m^* = maximum calculated design bending moment along the length of a member or in a segment

M_w^* = design bending moment acting on a web panel

M_x^* = design bending moment about major principal *x*-axis

M_y^* = design bending moment about minor principal *y*-axis

M_2^*, M_3^*, M_4^* = design bending moments at quarter and mid points of a segment

N_c = nominal member capacity in compression

N_{ch} = N_c for angle buckling about *h*-axis, parallel to the loaded leg

Accessed by SWINBURNE UNIVERSITY OF TECHNOLOGY on 15 Aug 2007

@Seismicisolation

@Seismicisolation

N_{cy} = N_c for member buckling about minor principal y-axis

N_{ol} = $\dfrac{\pi^2 EI}{l^2}$

N_{olr} = $\dfrac{\pi^2 EI_r}{l_r^{\,2}}$

N_{om} = elastic flexural buckling load of a member

N_{omb} = N_{om} for a braced member

N_{oms} = N_{om} for a sway member

N_{oz} = nominal elastic torsional buckling capacity of a member

N_s = nominal section capacity of a compression member; *or*

= nominal section capacity for axial load

N_t = nominal section capacity in tension

N_{tf} = nominal tension capacity of a bolt

N_{ti} = minimum bolt tension at installation; *or*

= tension induced in a bolt during installation

N_{wo} = nominal axial load capacity of a web panel

N^* = design axial force, tensile or compressive

N_r^* = design axial force in a restraining member

N_{tf}^* = design tensile force on a bolt

N_w^* = design axial force acting on a web panel

n = number of specimens tested

n_b = number of parallel planes of battens

n_{ei} = number of effective interfaces

n_i = number of cycles of nominal loading event i

n_n = number of shear planes with threads intercepting the shear plane—bolted connections

n_r = reference number of stress cycles

n_s = number of shear planes

n_{sc} = number of stress cycles

n_w = number of webs

n_x = number of shear planes without threads intercepting the shear plane—bolted connections

Q = nominal live load

Q^* = design transverse force; *or*

= design live load

R_b = nominal bearing capacity of a web

R_{bb} = nominal bearing buckling capacity

R_{by} = nominal bearing yield capacity

R_f = structural response factor

R_{sb} = nominal buckling capacity of a stiffened web

R_{sy} = nominal yield capacity of a stiffened web

Accessed by SWINBURNE UNIVERSITY OF TECHNOLOGY on 15 Aug 2007

@Seismicisolation

@Seismicisolation

R_u	=	nominal capacity
R^*	=	design bearing force; *or*
	=	design reaction
R_w^*	=	design bearing force or reaction on a web panel
r	=	radius of gyration; *or*
	=	transition radius
r_{ext}	=	outside radius of section
r_f	=	ratio of design action on the member under design load for fire to the design capacity of the member at room temperature
r_r	=	ratio defined in Clause 5.6.1.1
r_s	=	ratio defined in Clause 5.6.1.1
r_y	=	radius of gyration about minor principal *y*-axis
S	=	plastic section modulus
S^*	=	design action effect
s	=	spacing of stiffeners; *or*
	=	width of a web panel
s_b	=	longitudinal centre-to-centre distance between battens
s_g	=	gauge of bolts
s_p	=	staggered pitch of bolts
T	=	steel temperature in degrees Celsius
T_l	=	limiting steel temperature in degrees Celsius
t	=	thickness; *or*
	=	thickness of thinner part joined; *or*
	=	wall thickness of a circular hollow section; *or*
	=	thickness of an angle section; *or*
	=	time
t_f	=	thickness of a flange; *or*
	=	thickness of the critical flange
t_n	=	thickness of a nut
t_p	=	thickness of a ply; *or*
	=	thickness of thinner ply connected; *or*
	=	thickness of a plate
t_s	=	thickness of a stiffener
t_t, t_{t1}, t_{t2}	=	design throat thickness of a weld
t_w	=	thickness of a web
t_w, t_{w1}, t_{w2}	=	size of a fillet weld
V_b	=	nominal bearing capacity of a ply or a pin; *or*
	=	nominal shear buckling capacity of a web
V_f	=	nominal shear capacity of a bolt or pin—strength limit state
V_{sf}	=	nominal shear capacity of a bolt—serviceability limit state
V_{si}	=	measured slip-load at the *i*th bolt

Accessed by SWINBURNE UNIVERSITY OF TECHNOLOGY on 15 Aug 2007

@Seismicisolation

@Seismicisolation

V_u	=	nominal shear capacity of a web with a uniform shear stress distribution
V_v	=	nominal shear capacity of a web
V_{vm}	=	nominal web shear capacity in the presence of bending moment
V_w	=	nominal shear yield capacity of a web; *or*
	=	nominal shear capacity of a plug or slot weld
V^*	=	design shear force; *or*
	=	design horizontal storey shear force at lower column end; *or*
	=	design transverse shear force
V_b^*	=	design bearing force on a ply at a bolt or pin location
V_f^*	=	design shear force on a bolt or a pin—strength limit state
V_l^*	=	design longitudinal shear force
V_{sf}^*	=	design shear force on a bolt—serviceability limit state
V_w^*	=	design shear force acting on a web panel; *or*
	=	design shear force on a plug or slot weld
ν_w	=	nominal capacity of a fillet weld per unit length
ν_w^*	=	design force per unit length on a fillet weld
x	=	major principal axis coordinate
y	=	minor principal axis coordinate
y_L	=	distance of the gravity loading below the centroid
y_o	=	coordinate of shear centre
Z	=	elastic section modulus
Z_c	=	Z_e for a compact section
Z_e	=	effective section modulus
Z_{we}	=	elastic section modulus of a web panel
α	=	angle between *x*- and *h*-axes for an angle section
α_a	=	compression member factor, as defined in Clause 6.3.3
α_b	=	compression member section constant, as defined in Clause 6.3.3
α_{bc}	=	moment modification factor for bending and compression
α_c	=	compression member slenderness reduction factor
α_d	=	tension field coefficient for web shear buckling
α_f	=	flange restraint factor for web shear buckling
α_l, α_{lc}, α_{mc}	=	factors for bending defined in Paragraphs H2 and H3
α_m	=	moment modification factor for bending
α_p	=	coefficient used to calculate the nominal bearing yield capacity (R_{by}) for square and rectangular hollow sections to AS 1163
α_{pm}	=	coefficient used to calculate α_p
α_{ry}	=	elastic stiffness of a flexural end restraint
α_{rz}	=	elastic stiffness of a torsional end restraint
α_s	=	slenderness reduction factor; *or*
	=	inverse of the slope of the S-N curve for fatigue

Accessed by SWINBURNE UNIVERSITY OF TECHNOLOGY on 15 Aug 2007

@Seismicisolation

@Seismicisolation

α_{sr}	=	stability function multiplier
α_{st}	=	reduction factor for members of varying cross-section
α_T	=	coefficient of thermal expansion for steel, 11.7×10^{-6} per degree Celsius
α_t	=	factor for torsional end restraint defined in Clause 5.14.5
α_v	=	shear buckling coefficient for a web
α_w	=	factor defined in Appendix I
$ß_e$	=	modifying factor to account for conditions at the far ends of beam members
$ß_m$	=	ratio of smaller to larger bending moment at the ends of a member; *or*
	=	ratio of end moment to fixed end moment
$ß_t$	=	measure of elastic stiffness of torsional end restraint used in Appendix H
$ß_x$	=	monosymmetry section constant
$ß_w$	=	factor defined in Appendix I
γ	=	index used in Clause 8.3.4; *or*
	=	factor for transverse stiffener arrangement
γ, γ_1, γ_2	=	ratios of compression member stiffness to end restraint stiffness used in Clause 4.6.3.3
Δ	=	deflection; *or*
	=	deviation from nominated dimension; *or*
	=	measured total extension of a bolt when tightened
Δ_{ct}	=	mid-span deflection of a member resulting from transverse loading together with both end bending moments
Δ_{cw}	=	mid-span deflection of a member resulting from transverse loading together with only those end bending moments which produce a mid-span deflection in the same direction as the transverse load
Δ_f	=	out-of-flatness of a flange plate
Δh_b	=	deviation from h_b
Δl_c	=	deviation from l_c
Δ_s	=	translational displacement of the top relative to the bottom for a storey height
Δ_v	=	deviation from verticality of a web at a support
Δ_w	=	out-of-flatness of a web
δ	=	standard deviation
δ_b	=	moment amplification factor for a braced member
δ_m	=	moment amplification factor, taken as the greater of δ_b and δ_s
δ_p	=	moment amplification factor for plastic design
δ_s	=	moment amplification factor for a sway member
ξ	=	compression member factor defined in Clause 6.3.3
η	=	compression member imperfection factor defined in Clause 6.3.3
θ	=	angle of preparation of an incomplete penetration butt weld
π	=	pi ($\approx$ 3.14159)
λ	=	slenderness ratio; *or*
	=	elastic buckling load factor

Accessed by SWINBURNE UNIVERSITY OF TECHNOLOGY on 15 Aug 2007

@Seismicisolation

@Seismicisolation

λ_c = elastic buckling load factor

λ_e = plate element slenderness

λ_{ed} = plate element deformation slenderness limit

λ_{ep} = plate element plasticity slenderness limit

λ_{ey} = plate element yield slenderness limit

λ_m = elastic buckling load factor for a member

λ_{ms} = elastic buckling load factor for the storey under consideration

λ_n = modified compression member slenderness

λ_s = section slenderness

λ_{sp} = section plasticity slenderness limit

λ_{sy} = section yield slenderness limit

μ = slip factor

μ_m = mean value of the slip factor

ν = Poisson's ratio, 0.25

ϱ = ratio of design axial force in a restraining member to the elastic buckling load for a member of length l (Appendix G); *or*

= I_{cy}/I_y

ϕ = capacity factor

1.5 USE OF ALTERNATIVE MATERIALS OR METHODS

1.5.1 General This Standard shall not be interpreted so as to prevent the use of materials or methods of design or construction not specifically referred to herein, provided that the requirements of Section 3 are complied with.

1.5.2 Existing structures Where the strength or serviceability of an existing structure is to be evaluated, the general principles of this Standard may be applied. The actual properties of the materials in the structure shall be used.

1.6 DESIGN

1.6.1 Design data The following design data shall be shown in the drawings:

(a) The reference number and date of issue of applicable design Standards used.

(b) The nominal loads.

(c) The corrosion protection, if applicable.

(d) The fire-resistance level, if applicable.

(e) The steel grades used.

1.6.2 Design details The drawings or specification, or both, for steel members and structures shall include, as appropriate, the following:

(a) The size and designation of each member.

(b) The number, sizes and categories of bolts used in the connections.

(c) The sizes, types and categories of welds used in the connections, together with the level of visual examination and other non-destructive examination required.

(d) The sizes of the connection components.

(e) The locations and details of planned joints, connections and splices.

(f) Any constraint on construction assumed in the design.

Accessed by SWINBURNE UNIVERSITY OF TECHNOLOGY on 15 Aug 2007

@Seismicisolation

@Seismicisolation

(g) The camber of any members.

(h) Any other requirements for fabrication, erection and operation.

1.7 CONSTRUCTION All steel structures, designed in accordance with this Standard, shall be constructed to ensure that all the requirements of the design, as contained in the drawings and specification, are satisfied.

Accessed by SWINBURNE UNIVERSITY OF TECHNOLOGY on 15 Aug 2007

@Seismicisolation

@Seismicisolation

SECTION 2 MATERIALS

2.1 YIELD STRESS AND TENSILE STRENGTH USED IN DESIGN

2.1.1 Yield stress The yield stress used in design (f_y) shall not exceed that given in Table 2.1.

2.1.2 Tensile strength The tensile strength used in design (f_u) shall not exceed that given in Table 2.1.

2.2 STRUCTURAL STEEL

2.2.1 Australian Standards Except as otherwise permitted in Clause 2.2.3, all structural steel coming within the scope of this Standard shall, before fabrication, comply with the requirements of the following Standards, as appropriate:

AS 1163	Structural steel hollow sections.
AS/NZS 1594	Hot-rolled steel flat products.
AS/NZS 3678	Structural steel—Hot-rolled plates, floorplates and slabs
AS/NZS 3679	Structural steel
AS/NZS 3679.1	Part 1: Hot-rolled bars and sections
AS/NZS 3679.2	Part 2: Welded I sections

2.2.2 Acceptance of steels Certified mill test reports, or test certificates issued by the mill, shall constitute sufficient evidence of compliance with the Standards referred to in this Standard.

2.2.3 Unidentified steel If unidentified steel is used, it shall be free from surface imperfections, and shall be used only where the particular physical properties of the steel and its weldability will not adversely affect the strength and serviceability of the structure. Unless a full test in accordance with AS 1391 is made, the yield stress of the steel used in design (f_y) shall be taken as not exceeding 170 MPa, and the tensile strength used in design (f_u) shall be taken as not exceeding 300 MPa.

2.3 FASTENERS

2.3.1 Steel bolts, nuts and washers Steel bolts, nuts and washers shall comply with the following Standards, as appropriate:

AS/NZS 1110	ISO metric precision hexagon bolts and screws
AS/NZS 1111	ISO metric hexagon commercial bolts and screws
AS/NZS 1112	ISO metric hexagon nuts, including thin nuts, slotted nuts and castle nuts
AS/NZS 1252	High strength steel bolts with associated nuts and washers for structural engineering
AS/NZS 1559	Hot-dip galvanized steel bolts with associated nuts and washers for tower construction

2.3.2 Equivalent high strength fasteners The use of other high strength fasteners having special features in lieu of bolts to AS/NZS 1252 shall be permitted provided that evidence of their equivalence to high strength bolts complying with AS/NZS 1252 and installation in accordance with this Standard is available.

Equivalent fasteners shall meet the following requirements:

(a) The chemical composition and mechanical properties of equivalent fasteners shall comply with AS/NZS 1252 for the relevant bolt, nut and washer components.

(b) The body diameter, head or nut bearing areas, or their equivalents, of equivalent fasteners shall not be less than those provided by a bolt and nut complying with AS/NZS 1252 of the same

Accessed by SWINBURNE UNIVERSITY OF TECHNOLOGY on 15 Aug 2007

@Seismicisolation

@Seismicisolation

nominal dimensions. Equivalent fasteners may differ in other dimensions from those specified in AS/NZS 1252.

(c) The method of tensioning and the inspection procedure for equivalent fasteners may differ in detail from those specified in Clauses 15.2.5 and 15.4 respectively, provided that the minimum fastener tension is not less than the minimum bolt tension given in Table 15.2.5.1 and that the tensioning procedure is able to be checked.

2.3.3 Welds All welding consumables and deposited weld metal shall comply with AS/NZS 1554.1, except that where required by Clause 11.1.5, they shall comply with AS/NZS 1554.5.

2.3.4 Welded studs All welded studs shall comply with, and shall be installed in accordance with AS 1554.2.

2.3.5 Explosive fasteners All explosive fasteners shall comply with, and shall be installed in accordance with AS/NZS 1873.

2.3.6 Anchor bolts Anchor bolts shall comply with either the bolt Standards of Clause 2.3.1 or shall be manufactured from rods complying with the steel Standards of Clause 2.2.1 provided that the threads comply with AS 1275.

2.4 STEEL CASTINGS All steel castings shall comply with AS 2074.

Accessed by SWINBURNE UNIVERSITY OF TECHNOLOGY on 15 Aug 2007

@Seismicisolation

@Seismicisolation

TABLE 2.1

STRENGTHS OF STEELS COMPLYING WITH AS 1163, AS/NZS 1594, AS/NZS 3678, AS/NZS 3679.1 AND AS/NZS 3679.2*

Steel Standard	Form	Steel grade	Thickness of material, *t* mm	Yield stress MPa	Tensile strength MPa
AS 1163	Hollow sections	C450 C450L0	All	450	500
		C350 C350L0	All	350	430
		C250 C250L0	All	250	320
AS/NZS 1594	Plate, strip and floorplate	HA400	All	380	460
		HW350	All	340	450
		HA350	All	350	430
		HA300/1	All	300	430
		HA300 HU300	All	300	400
		HA250 HU250	All	250	350
		HA200	All	200	300
	Plate and strip	HA4N	All	170	280
		HA3	All	200	300
		HA1	All	(See Note 1)	(See Note 1)
		XF500	$t \leq 8$	480 (See Note 2)	570
		XF400	$t \leq 8$	380	460
		XF300	$t \leq 8$	300	440
AS/NZS 3678	Plate and floorplate	450 450L15	$t \leq 20$	450	520
		450 450L15	$20 < t \leq 32$	420	500
		450 450L15	$32 < t \leq 50$	400	500
		400 400L15	$t \leq 12$	400	480

(continued)

Accessed by SWINBURNE UNIVERSITY OF TECHNOLOGY on 15 Aug 2007

@Seismicisolation

@Seismicisolation

TABLE 2.1 *(continued)*

Steel Standard	Form	Steel grade	Thickness of material, t mm	Yield stress MPa	Tensile strength MPa
		400 400L15	$12 < t \leq 20$	380	480
		400 400L15	$20 < t \leq 80$	360	480
		350 350L15	$t \leq 12$	360	450
		350 350L15	$12 < t \leq 20$	350	450
		350 350L15	$20 < t \leq 80$	340	450
		350 350L15	$80 < t \leq 150$	330	450
		WR350 WR350L0	$t \leq 50$	340	450
		300 300L15	$t \leq 8$	320	430
		300 300L15	$8 < t \leq 12$	310	430
		300 300L15	$12 < t \leq 20$	300	430
		300 300L15	$20 < t \leq 150$	280	430
		250 250L15	$t \leq 8$	280	410
		250 250L15	$8 < t \leq 12$	260	410
		250 250L15	$12 < t \leq 50$	250	410
		250L15	$50 < t \leq 150$	240	410
		250	$50 < t \leq 80$	240	410
		250	$80 < t \leq 150$	230	410
		200	$t \leq 12$	200	300

(continued)

Accessed by SWINBURNE UNIVERSITY OF TECHNOLOGY on 15 Aug 2007

@Seismicisolation

@Seismicisolation

TABLE 2.1 *(continued)*

Steel Standard	Form	Steel grade	Thickness of material, *t* mm	Yield stress MPa	Tensile strength MPa
AS/NZS 3679.1	Flats and sections	400 400L0 400L15	$t \leq 17$	400	520
		400 400L0 400L15	$t > 17$	380	520
		350 350L0 350L15	$t \leq 11$	360	480
		350 350L0 350L15	$11 < t < 40$	340	480
		350 350L0 350L15	$t \geq 40$	330	480
		300 300L0 300L15	$t < 11$	320	440
		300 300L0 300L15	$11 \leq t \leq 17$	300	440
		300 300L0 300L15	$t > 17$	280	440
		250 250L0 250L15	$t < 11$	260	410
		250 250L0 250L15	$11 \leq t < 40$	250	410
		250 250L0 250L15	$t \geq 40$	230	410
	Hexagons, rounds and squares	400 400L0 400L15	$t \leq 50$	400	520

(continued)

Accessed by SWINBURNE UNIVERSITY OF TECHNOLOGY on 15 Aug 2007

@Seismicisolation

@Seismicisolation

TABLE 2.1 *(continued)*

Steel Standard	Form	Steel grade	Thickness of material, t mm	Yield stress MPa	Tensile strength MPa
		400 400L0 400L15	$50 < t < 100$	380	520
		400 400L0 400L15	$t \geq 100$	360	520
		350 350L0 350L15	$t \leq 50$	340	480
		350 350L0 350L15	$50 < t < 100$	330	480
		350 350L0 350L15	$t \geq 100$	320	480
		300 300L0 300L15	$t \leq 50$	300	440
		300 300L0 300L15	$50 < t < 100$	290	440
		300 300L0 300L15	$t \geq 100$	280	440
		250 250L0 250L15	$t \leq 50$	250	410
		250 250L0 250L15	$t > 50$	230	410

* Welded I-sections complying with AS/NZS 3679.2 are manufactured from hot-rolled structural steel plates complying with AS/NZS 3678.

NOTES:

1 For design purposes, yield and tensile strengths approximate those of structural Grade HA200. For specific information, contact the supplier.

2 Clause 1.1(b) does not permit the yield stress (f_y) used in design to exceed 450 MPa.

Accessed by SWINBURNE UNIVERSITY OF TECHNOLOGY on 15 Aug 2007

@Seismicisolation

@Seismicisolation

SECTION 3 GENERAL DESIGN REQUIREMENTS

3.1 DESIGN

3.1.1 Aim The aim of structural design is to provide a structure which is stable, has adequate strength, is serviceable and durable, and which satisfies other objectives such as economy and ease of construction.

A structure is stable if it does not overturn, tilt or slide throughout its intended life.

A structure has adequate strength and is serviceable if the probabilities of structural failure and of loss of serviceability throughout its intended life are acceptably low.

A structure is durable if it withstands the expected wear and deterioration throughout its intended life without the need for undue maintenance.

3.1.2 Requirements The structure and its component members and connections shall satisfy the design requirements for stability, strength, serviceability, brittle fracture, fatigue, fire and earthquake in accordance with the procedures given in this Standard, as appropriate.

3.2 LOADS AND OTHER ACTIONS

3.2.1 Loads The design of a structure for the stability, strength and serviceability limit states shall account for the action effects directly arising from the following loads:

(a) Dead, live, wind, snow and earthquake loads specified in AS 1170.1, AS 1170.2, AS 1170.3 and AS 1170.4.

(b) For the design of cranes, any relevant loads specified in AS 1418.

(c) For the design of fixed platforms, walkways, stairways and ladders, any relevant loads specified in AS 1657.

(d) For the design of lifts, any relevant loads specified in AS 1735.

(e) Other specific loads, as required.

NOTES:

1 For the design of bridges, loads specified in SAA HB77.2 or SAA HB77.8, as applicable, should be used.

2 For multi-storey building structures, see also Clause 3.2.4.

3.2.2 Other actions Any action which may significantly affect the stability, strength or serviceability of the structure, including the following, shall be taken into account:

(a) Foundation movements.

(b) Temperature changes and gradients.

(c) Axial shortening.

(d) Dynamic effects.

(e) Construction loading.

3.2.3 Design load combinations The design load combinations for the stability, strength and serviceability limit states shall be those specified in AS 1170.1.

NOTE: For the design of bridges, load combinations specified in SAA HB77.2 or SAA HB77.8, as applicable, should be used.

3.2.4 Notional horizontal forces For multi-storey building structures only, notional horizontal forces, each equal to 0.002 times the total design vertical loads applied at a floor level, shall be applied at that floor level. These notional horizontal forces shall be considered to act in conjunction with only the design dead and live loads from AS 1170.1 for the strength and serviceability limit states. These notional horizontal forces shall not be included for the stability limit state.

Accessed by SWINBURNE UNIVERSITY OF TECHNOLOGY on 15 Aug 2007

@Seismicisolation

@Seismicisolation

3.3 STABILITY LIMIT STATE The structure as a whole (and any part of it) shall be designed to prevent instability due to overturning, uplift or sliding as follows:

(a) The loads determined in accordance with Clause 3.2 shall be subdivided into the components tending to cause instability and the components tending to resist instability.

(b) The design action effect (S^*) shall be calculated from the components of the loads tending to cause instability, combined in accordance with the load combinations for the strength limit state specified in AS 1170.1.

(c) The design resistance effect shall be calculated as 0.8 times the part of the dead load tending to resist the instability plus the design capacity (ϕR_u) of any elements contributing towards resisting the instability, where ϕ is a capacity factor which shall not exceed the appropriate value given in Table 3.4.

(d) The whole or part of the structure shall be proportioned so that the design resistance effect is not less than the design action effect.

3.4 STRENGTH LIMIT STATE The structure and its component members and connections shall be designed for the strength limit state as follows:

(a) The loads and actions shall be determined in accordance with Clauses 3.2.1 and 3.2.2, and the strength limit state design loads shall be determined in accordance with Clauses 3.2.3 and 3.2.4.

(b) The design action effects (S^*) resulting from the strength limit state design loads shall be determined by an analysis in accordance with Section 4.

(c) The design capacity (ϕR_u) shall be determined from the nominal capacity (R_u) determined from Sections 5 to 9, as appropriate, where the capacity factor (ϕ) shall not exceed the appropriate value given in Table 3.4.

(d) All members and connections shall be proportioned so that the design capacity (ϕR_u) is not less than the design action effect (S^*), i.e.—

$$S^* \leq \phi R_u$$

TABLE 3.4

CAPACITY FACTORS (ϕ) FOR STRENGTH LIMIT STATES

Design capacity for	Clauses	Capacity factor (ϕ)
Member subject to bending		
—full lateral support	5.1, 5.2 & 5.3	0.90
—segment without full lateral support	5.1 & 5.6	0.90
—web in shear	5.11 & 5.12	0.90
—web in bearing	5.13	0.90
—stiffener	5.14, 5.15 & 5.16	0.90
Member subject to axial compression		
—section capacity	6.1 & 6.2	0.90
—member capacity	6.1 & 6.3	0.90
Member subject to axial tension	7.1 & 7.2	0.90
Member subject to combined actions		
—section capacity	8.3	0.90
—member capacity	8.4	0.90

(continued)

Accessed by SWINBURNE UNIVERSITY OF TECHNOLOGY on 15 Aug 2007

@Seismicisolation

@Seismicisolation

TABLE 3.4 *(continued)*

Design capacity for	Clauses	Capacity factor (ϕ)	
Connection component other than a bolt, pin or weld	9.1.9	0.90	
Bolted connection			
—bolt in shear	9.3.2.1	0.80	
—bolt in tension	9.3.2.2	0.80	
—bolt subject to combined shear and tension	9.3.2.3	0.80	
—ply in bearing	9.3.2.4	0.90	
—bolt group	9.4	0.80	
Pin connection			
—pin in shear	9.5.1	0.80	
—pin in bearing	9.5.2	0.80	
—pin in bending	9.5.3	0.80	
—ply in bearing	9.5.4	0.90	
Welded connection		SP Category	GP Category
—complete penetration butt weld	9.7.2.7	0.90	0.60
—longitudinal fillet weld in RHS (t < 3mm)	9.7.3.10	0.70	—
—other fillet weld and incomplete penetration butt weld	9.7.3.10	0.80	0.60
—plug or slot weld	9.7.4	0.80	0.60
—weld group	9.8	0.80	0.60

3.5 SERVICEABILITY LIMIT STATE

3.5.1 General The structure and its components shall be designed for the serviceability limit state by controlling or limiting deflection, vibration, bolt slip and corrosion, as appropriate, in accordance with the relevant requirements of Clauses 3.5.2 to 3.5.6.

3.5.2 Method The structure and its components shall be designed for the serviceability limit state as follows:

(a) The loads and other actions shall be determined in accordance with Clauses 3.2.1 and 3.2.2, and the serviceability limit state design loads shall be determined in accordance with Clauses 3.2.3 and 3.2.4.

(b) Deflections due to the serviceability limit state design loads shall be determined by the first-order elastic analysis method of Clause 4.4.2.1 with all amplification factors taken as unity. Deflections shall comply with Clause 3.5.3.

(c) Vibration behaviour shall be assessed in accordance with Clause 3.5.4.

(d) Bolt slip shall be limited, where required, in accordance with Clause 3.5.5.

(e) Corrosion protection shall be provided in accordance with Clause 3.5.6.

3.5.3 Deflection limits The deflection limits for the serviceability limit state shall be appropriate to the structure and its intended use, the nature of the loading, and the elements supported by it.

NOTE: Suggested deflection limits may be found in Appendix B.

3.5.4 Vibration of beams Beams which support floors or machinery shall be checked to ensure that the vibrations induced by machinery, or vehicular or pedestrian traffic do not adversely affect the serviceability of the structure.

Accessed by SWINBURNE UNIVERSITY OF TECHNOLOGY on 15 Aug 2007

@Seismicisolation

@Seismicisolation

Where there is a likelihood of a structure being subjected to vibration from causes such as wind forces or machinery, measures shall be taken to prevent discomfort or alarm, damage to the structure, or interference with its proper function.

NOTE: AS 2670 gives guidance for the evaluation of human exposure to whole-body vibrations of the type likely to be transmitted by structures.

3.5.5 Bolt serviceability limit state In a connection, where slip under the serviceability design loads shall be avoided, the fasteners shall be selected in accordance with Clause 9.1.6.

For a friction-type connection which is subject to shear force in the plane of the interfaces, and for which slip under serviceability loads shall be avoided, the capacity factor (δ) shall be taken as 0.7 and the bolts shall be designed in accordance with Clause 9.3.3.

3.5.6 Corrosion protection Where steelwork in a structure is to be exposed to a corrosive environment, the steelwork shall be given protection against corrosion. The degree of protection to be employed shall be determined after consideration has been given to the use of the structure, its maintenance, and the climatic or other local conditions.

NOTE: Recommendations on corrosion protection may be found in Appendix C.

3.6 STRENGTH AND SERVICEABILITY LIMIT STATES BY LOAD TESTING Notwithstanding the requirements of Clause 3.4 or 3.5, a structure or a component member or connection may be designed for the strength or serviceability limit state or both, by load-testing in accordance with Section 17. If this alternative procedure is adopted, the requirements of Clauses 3.7 to 3.11, as appropriate, shall also apply.

3.7 BRITTLE FRACTURE In order to avoid failure by brittle fracture, the selection of the parent material shall be made in accordance with Section 10.

3.8 FATIGUE For structures and structural elements subject to loadings which could lead to fatigue, the fatigue strength shall be determined in accordance with Section 11.

3.9 FIRE The structure, its component members and connections shall be designed in accordance with Section 12.

3.10 EARTHQUAKE The structure, its component members, connections and any non-structural components shall be designed for earthquake loads in accordance with AS 1170.4 and Section 13.

3.11 OTHER DESIGN REQUIREMENTS Requirements other than those listed in Clause 3.1.2, such as differential settlement, progressive collapse and any special performance requirements, shall be considered where relevant and, if significant, shall be taken into account in the design of the structure in accordance with the principles of this Standard and appropriate engineering principles.

The design of bridges for loads resulting from floods or collision shall be carried out in accordance with SAA HB77.2 or SAA HB77.8, as appropriate.

Accessed by SWINBURNE UNIVERSITY OF TECHNOLOGY on 15 Aug 2007

@Seismicisolation

@Seismicisolation

SECTION 4 METHODS OF STRUCTURAL ANALYSIS

4.1 METHODS OF DETERMINING ACTION EFFECTS

4.1.1 General For the purpose of complying with the requirements for the limit states of stability, strength and serviceability specified in Section 3, the design action effects in a structure and its members and connections caused by the design loads shall be determined by structural analysis using the assumptions of Clauses 4.2 and 4.3 and one of the methods of—

(a) elastic analysis, in accordance with Clause 4.4;

(b) plastic analysis, in accordance with Clause 4.5; or

(c) advanced analysis, in accordance with Appendix D.

The design action effects for earthquake loads shall be obtained by an analysis complying with Item (a), (b) or (c). The earthquake loads calculated in accordance with AS 1170.4 shall be assumed to correspond to the load at which the first significant plastic hinge forms in the structure.

4.1.2 Definitions For the purpose of this Section, the definitions below apply:

(a) *Braced member*—one for which the transverse displacement of one end of the member relative to the other is effectively prevented. This applies to triangulated frames and trusses or to frames where in-plane stiffness is provided by diagonal bracing, or by shear walls, or by floor slabs or roof decks secured horizontally to walls or to bracing systems parallel to the plane of buckling of the member.

(b) *Sway member*—one for which the transverse displacement of one end of the member relative to the other is not effectively prevented. Such members occur in structures which depend on flexural action to limit the sway.

4.2 FORMS OF CONSTRUCTION ASSUMED FOR STRUCTURAL ANALYSIS

4.2.1 General The distribution of the design action effects throughout the members and connections of a structure shall be determined by assuming one or a combination of the following forms of construction:

(a) Rigid.

(b) Semi-rigid.

(c) Simple.

4.2.2 Rigid construction For rigid construction, the connections shall be assumed to have sufficient rigidity to hold the original angles between the members unchanged.

4.2.3 Semi-rigid construction For semi-rigid construction, the connections may not have sufficient rigidity to hold the original angles between the members unchanged, but shall be assumed to have the capacity to furnish a dependable and known degree of flexural restraint.

The relationship between the degree of flexural restraint and the level of the load effects shall be established by methods based on test results.

4.2.4 Simple construction For simple construction, the connections at the ends of members shall be assumed not to develop bending moments.

4.2.5 Design of connections The design of all connections shall be consistent with the form of construction, and the behaviour of the connections shall not adversely affect any other part of the structure beyond what is allowed for in design. Connections shall be designed in accordance with Section 9.

Accessed by SWINBURNE UNIVERSITY OF TECHNOLOGY on 15 Aug 2007

@Seismicisolation

@Seismicisolation

4.3 ASSUMPTIONS FOR ANALYSIS

4.3.1 General The structure shall be analyzed in its entirety except as follows:

(a) Regular building structures may be analyzed as a series of parallel two-dimensional substructures, the analysis being carried out in each of two directions at right angles, except when there is significant load redistribution between the substructures.

(b) For vertical loading in a multi-storey building structure provided with bracing or shear walls to resist all lateral forces, each level thereof together with the columns immediately above and below may be considered as substructures, the columns being assumed fixed at the ends remote from the level under consideration.

Where floor beams in a multi-storey building structure are considered as substructures, the bending moment at a support may be determined from the assumption that the floor is fixed at the support one span away, provided that the floor beam continues beyond that point.

4.3.2 Span length The span length of a flexural member shall be taken as the distance centre-to-centre of the supports.

4.3.3 Arrangements of live loads for buildings For building structures, the arrangements of live loads considered in the analysis shall include at least the following:

(a) Where the loading pattern is fixed, the arrangement concerned.

(b) Where the nominal live load (Q) is variable and not greater than three-quarters of the nominal dead load (G), the design live load (Q^*) on all spans.

(c) Where the nominal live load (Q) is variable and exceeds three-quarters of the nominal dead load (G), arrangements for the floor under consideration consisting of—

(i) the design live load (Q^*) on alternate spans;

(ii) the design live load (Q^*) on two adjacent spans; and

(iii) the design live load (Q^*) on all spans.

4.3.4 Simple construction Bending members may be assumed to have their ends connected for shear only and to be free to rotate. In triangulated structures, axial forces may be determined by assuming that all members are pin connected.

A beam reaction or a similar load on a column shall be taken as acting at a minimum distance of 100 mm from the face of the column towards the span or at the centre of bearing, whichever gives the greater eccentricity, except that for a column cap, the load shall be taken as acting at the face of the column, or edge of packing if used, towards the span.

For a continuous column, the design bending moment (M^*) due to eccentricity of loading at any one floor or horizontal frame level shall be taken as—

(a) ineffective at the floor or frame levels above and below that floor; and

(b) divided between the column lengths above and below that floor or frame level in proportion to the values of I/l of the column lengths.

4.4 ELASTIC ANALYSIS

4.4.1 General

4.4.1.1 *Assumptions* Individual members shall be assumed to remain elastic under the action of the design loads for all limit states.

The effect of haunching or any variation of the cross-section along the axis of a member shall be considered and, where significant, shall be taken into account in the determination of the member stiffness.

Accessed by SWINBURNE UNIVERSITY OF TECHNOLOGY on 15 Aug 2007

@Seismicisolation

@Seismicisolation

4.4.1.2 *Second-order effects* The analysis shall allow for the effects of the design loads acting on the structure and its members in their displaced and deformed configuration. These second-order effects shall be taken into account by using either—

(a) a first-order elastic analysis with moment amplification in accordance with Clause 4.4.2, provided the moment amplification factors (δ_b) or (δ_s) are not greater than 1.4; or

(b) a second-order elastic analysis in accordance with Appendix E.

4.4.2 First-order elastic analysis

4.4.2.1 *General* In a first-order elastic analysis, changes in the geometry are not accounted for, and changes in the effective stiffnesses of the members due to axial force are neglected. The effects of these on the first-order bending moments shall be allowed for by using one of the methods of moment amplification of Clause 4.4.2.2 or Clause 4.4.2.3 as appropriate, except that where the moment amplification factor (δ_b) or (δ_s), calculated in accordance with Clause 4.4.2.2 or Clause 4.4.2.3 as appropriate, is greater than 1.4, a second-order elastic analysis in accordance with Appendix E shall be carried out.

The maximum calculated bending moment (M_m^*) shall be taken as the maximum bending moment along the length of a member obtained by superposition of the simple beam bending moments resulting from any transverse loading on the member with the end bending moments determined by the analysis.

4.4.2.2 *Moment amplification for a braced member* For a braced member with zero axial force or a braced member subject to axial tension, the design bending moment (M^*) shall be calculated as follows:

$$M^* = M_m^*$$

For a braced member with a design axial compressive force (N^*) as determined by the analysis, the design bending moment (M^*) shall be calculated as follows:

$$M^* = \delta_b M_m^*$$

where δ_b is a moment amplification factor for a braced member calculated as follows:

$$\delta_b = \frac{c_m}{1 - \left(\frac{N^*}{N_{omb}}\right)} \geq 1$$

and N_{omb} is the elastic buckling load, determined in accordance with Clause 4.6.2, for the braced member buckling about the same axis as that about which the design bending moment (M^*) is applied.

For a braced member subject to end bending moments only, the factor c_m shall be calculated as follows:

$$c_m = 0.6 - 0.4ß_m \leq 1.0$$

where $ß_m$ is the ratio of the smaller to the larger bending moment at the ends of the member, taken as positive when the member is bent in reverse curvature.

The same expression for c_m shall be used for a braced member with transverse load applied to it, provided that $ß_m$ is determined by one of the following methods:

(a) $ß_m = -1.0$;

(b) $ß_m$ is approximated by the value obtained by matching the distribution of bending moment along the member with one of the typical distributions of bending moment shown in Figure 4.4.2.2; or

(c) $\beta_m = 1 - \left(\frac{2\Delta_{ct}}{\Delta_{cw}}\right)$ with $-1.0 \leq ß_m \leq 1.0$

Accessed by SWINBURNE UNIVERSITY OF TECHNOLOGY on 15 Aug 2007

@Seismicisolation

@Seismicisolation

where

Δ_{ct} = mid-span deflection of the member resulting from the transverse loading together with both end bending moments, if any, as determined by the analysis

Δ_{cw} = mid-span deflection of the member resulting from the transverse loading together with only those end bending moments which produce a mid-span deflection in the same direction as the transverse load.

4.4.2.3 *Moment amplification for a sway member* For a sway member, the design bending moment (M^*) shall be calculated using either the method given in this Clause, or the method given in Appendix F.

For this Clause, the design bending moment (M^*) shall be calculated as follows:

$$M^* = \delta_m M_m^*$$

The moment amplification factor (δ_m) shall be taken as the greater of—

δ_b = the moment amplification factor for a braced member determined in accordance with Clause 4.4.2.2, and

δ_s = the moment amplification factor for a sway member determined as follows:

(a) *Sway members in rectangular frames* For all sway columns in a storey of a rectangular frame, the amplification factor (δ_s) shall be calculated from—

(i) $$\delta_s = \frac{1}{1 - \left(\frac{\Delta_s}{h_s} \frac{\Sigma N^*}{\Sigma V^*}\right)}$$

where Δ_s is the translational displacement of the top relative to the bottom in the storey of height (h_s), caused by the design horizontal storey shears (V^*) at the column ends, N^* is the design axial force in a column of the storey, and the summations include all the columns of the storey;

(ii) $$\delta_s = \frac{1}{1 - \left(\frac{1}{\lambda_{ms}}\right)}$$

where the elastic buckling load factor (λ_{ms}) for the storey under consideration is determined in accordance with Clause 4.7.2.2.; or

(iii) $$\delta_s = \frac{1}{1 - \left(\frac{1}{\lambda_c}\right)}$$

where the elastic buckling load factor (λ_c) is determined from a rational buckling analysis of the whole frame (see Clause 4.7.2).

(b) *Sway members in non-rectangular frames* The amplification factor (δ_s) for each sway member shall be taken as the value for the frame calculated as follows:

$$\delta_s = \frac{1}{1 - \left(\frac{1}{\lambda_c}\right)}$$

where the elastic buckling load factor (λ_c) is determined from a rational buckling analysis of the whole frame (see Clause 4.7.2).

Accessed by SWINBURNE UNIVERSITY OF TECHNOLOGY on 15 Aug 2007

@Seismicisolation

@Seismicisolation

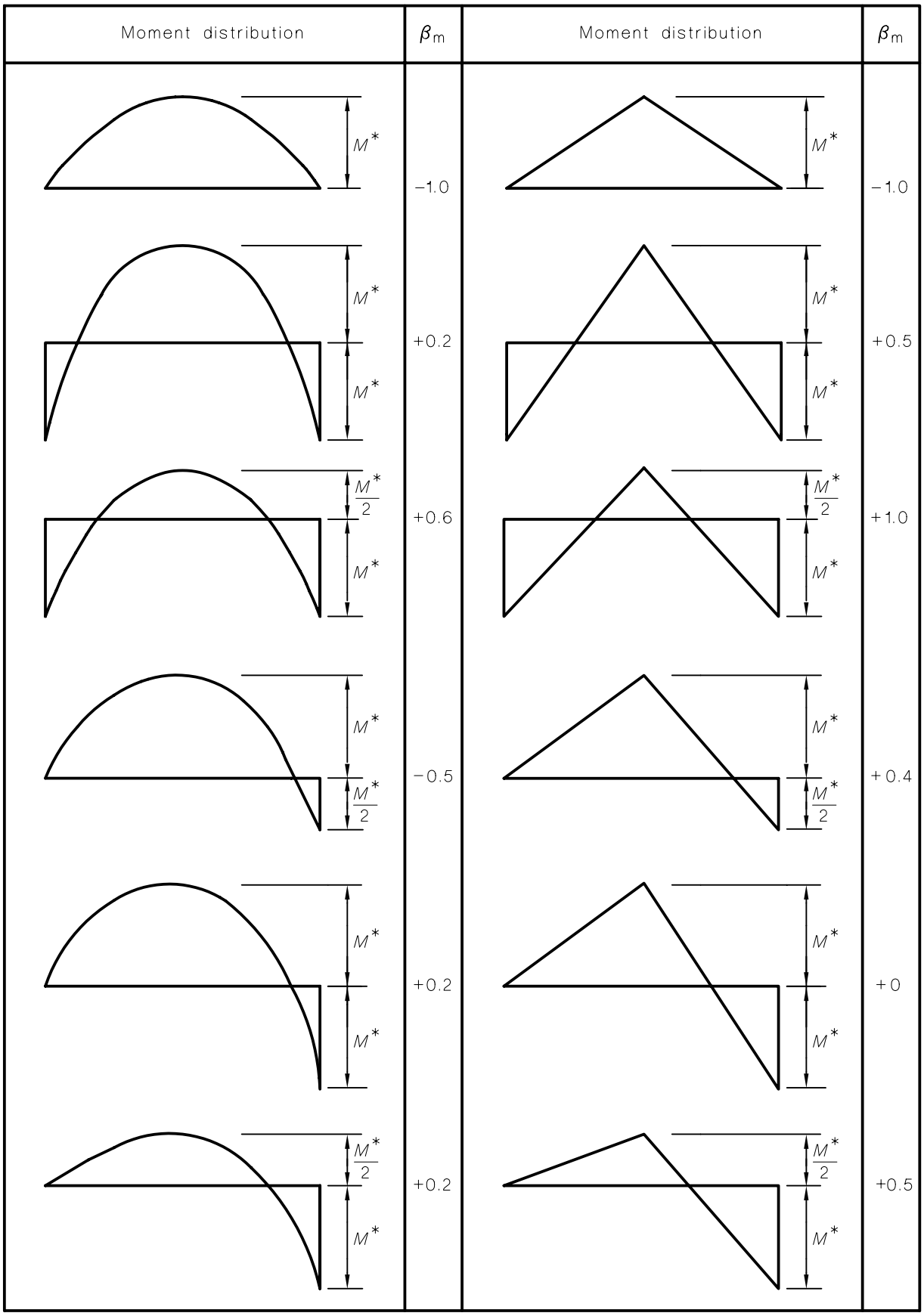

FIGURE 4.4.2.2 (in part) VALUES OF β_m FOR VARIOUS DISTRIBUTIONS OF BENDING MOMENT

Accessed by SWINBURNE UNIVERSITY OF TECHNOLOGY on 15 Aug 2007

@Seismicisolation

@Seismicisolation

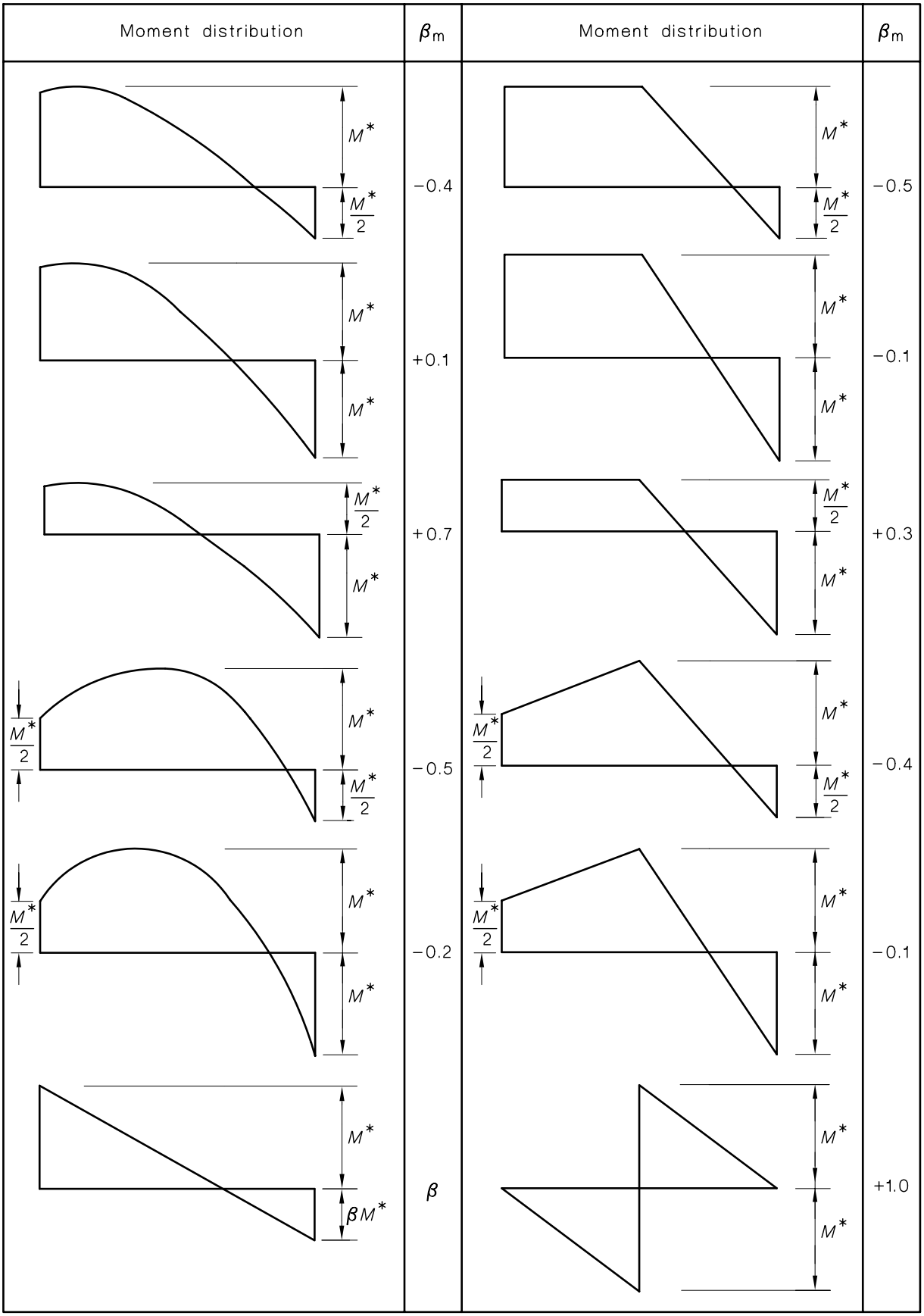

FIGURE 4.4.2.2 (in part) VALUES OF β_m FOR VARIOUS DISTRIBUTIONS OF BENDING MOMENT

Accessed by SWINBURNE UNIVERSITY OF TECHNOLOGY on 15 Aug 2007

@Seismicisolation

@Seismicisolation

4.5 PLASTIC ANALYSIS

4.5.1 Application The design action effects throughout all or part of a structure may be determined by a plastic analysis provided that the limitations of Clause 4.5.2 are observed. The distribution of design action effects shall satisfy equilibrium and the boundary conditions.

4.5.2 Limitations When a plastic method of analysis is used, all of the following conditions shall be satisfied unless adequate ductility of the structure and plastic rotation capacity of its members and connections are established for the design loading conditions:

(a) The minimum yield stress specified for the grade of the steel shall not exceed 450 MPa.

(b) The stress-strain characteristics of the steel shall not be significantly different from those obtained for steels complying with AS/NZS 3678 or AS/NZS 3679.1, and shall be such as to ensure moment redistribution.

This requirement may be deemed to be satisfied if—

(i) the stress-strain diagram has a plateau at the yield stress extending for at least six times the yield strain;

(ii) the ratio of the tensile strength to the yield stress specified for the grade of the steel (see Table 2.1) is not less than 1.2;

(iii) the elongation on a gauge length complying with AS 1391 is not less than 15%; and

(iv) the steel exhibits a strain-hardening capability.

(c) The members used shall be hot-formed.

(d) The members used shall be doubly symmetric I-sections.

(e) The geometry of the member sections shall comply with the requirements specified for a compact section in Clause 5.2.3.

(f) The members shall not be subject to impact loading or fluctuating loading requiring a fatigue assessment (see Section 11).

4.5.3 Assumptions of analysis The design action effects shall be determined using a rigid plastic analysis.

It shall be permissible to assume full strength or partial strength connections, provided the capacities of these are used in the analysis, and provided that—

(a) for a full strength connection, for which the moment capacity of the connection shall be not less than that of the member being connected, the behaviour of the connection shall be such that the rotation capacity at none of the hinges in the collapse mechanism is exceeded; and

(b) for a partial strength connection, for which the moment capacity of the connection may be less than that of the member being connected, the behaviour of the connection shall be such as to allow all plastic hinges necessary for the collapse mechanism to develop, and shall be such that the rotation capacity at none of the plastic hinges is exceeded.

4.5.4 Second order effects Any second-order effects of the loads acting on the structure in its deformed configuration may be neglected where the elastic buckling load factor (λ_c) (see Clause 4.7) satisfies—

$$10 \leq \lambda_c$$

For $5 \leq \lambda_c < 10$, second-order effects may be neglected provided the design load effects are amplified by a factor δ_p

where

$$\delta_p = \frac{0.9}{1 - \left(\frac{1}{\lambda_c}\right)}$$

For $\lambda_c < 5$, a second-order plastic analysis shall be carried out.

Accessed by SWINBURNE UNIVERSITY OF TECHNOLOGY on 15 Aug 2007

@Seismicisolation

@Seismicisolation

4.6 MEMBER BUCKLING ANALYSIS

4.6.1 General The elastic buckling load of a member (N_{om}) for the particular conditions of end restraint provided by the surrounding frame shall be determined in accordance with Clause 4.6.2. The member buckling load (N_{omb}) is used in the determination of the moment amplification factor for a braced member (δ_b) in Clause 4.4.2.2, and the member buckling load (N_{oms}) in the determination of the elastic buckling load factor (λ_{ms}) in Clause 4.7.2.2 which is used in the determination of the moment amplification factor for a sway member (δ_s) in Clause 4.4.2.3.

4.6.2 Member elastic buckling load The elastic buckling load of a member (N_{om}) shall be determined as follows:

$$N_{om} = \frac{\pi^2 EI}{(k_e l)^2}$$

where k_e is the member effective length factor, determined in accordance with Clause 4.6.3 and l is the member length from centre to centre of its intersections with supporting members.

4.6.3 Member effective length factor

4.6.3.1 *General* The value of the member effective length factor (k_e) depends on the rotational restraints and the translational restraints at the ends of the member. In Figure 4.6.3.3(a) for a braced member, the translational restraint has been assumed to be infinite. In Figure 4.6.3.3(b) for a sway member, the translational restraint has been assumed to be zero.

The value of the member effective length factor (k_e) shall be determined in accordance with the following:

(a) Clause 4.6.3.2 for members with idealized end restraints.

(b) Clause 4.6.3.3 or Appendix G for braced members in frames.

(c) Clause 4.6.3.3 for sway members in rectangular frames with regular loading and negligible axial forces in the beams.

(d) Clause 4.6.3.5 for members in triangulated structures.

4.6.3.2 *Members with idealized end restraints* Values of the member effective length factor (k_e) which shall be used for some idealized conditions of end restraint for members are given in Figure 4.6.3.2.

	Braced member			Sway member		
Buckled shape						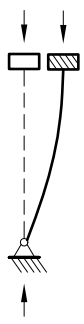
Effective length factor (k_e)	0.7	0.85	1.0	1.2	2.2	2.2
Symbols for end restraint conditions	= Rotation fixed, translation fixed = Rotation free, translation fixed			= Rotation fixed, translation fixed = Rotation free, translation fixed		

FIGURE 4.6.3.2 EFFECTIVE LENGTH FACTORS FOR MEMBERS FOR IDEALIZED CONDITIONS OF END RESTRAINT

Accessed by SWINBURNE UNIVERSITY OF TECHNOLOGY on 15 Aug 2007

@Seismicisolation

@Seismicisolation

4.6.3.3 *Members in frames* For a compression member which forms part of a rigid-jointed frame, the member effective length factor (k_e) shall be obtained from Figure 4.6.3.3(a) for a braced member and from Figure 4.6.3.3(b) for a sway member. In these figures, γ_1 and γ_2 are the ratios of the compression member stiffness to the end restraint stiffnesses. The γ-values shall be determined in accordance with Clause 4.6.3.4 or Appendix G, as appropriate.

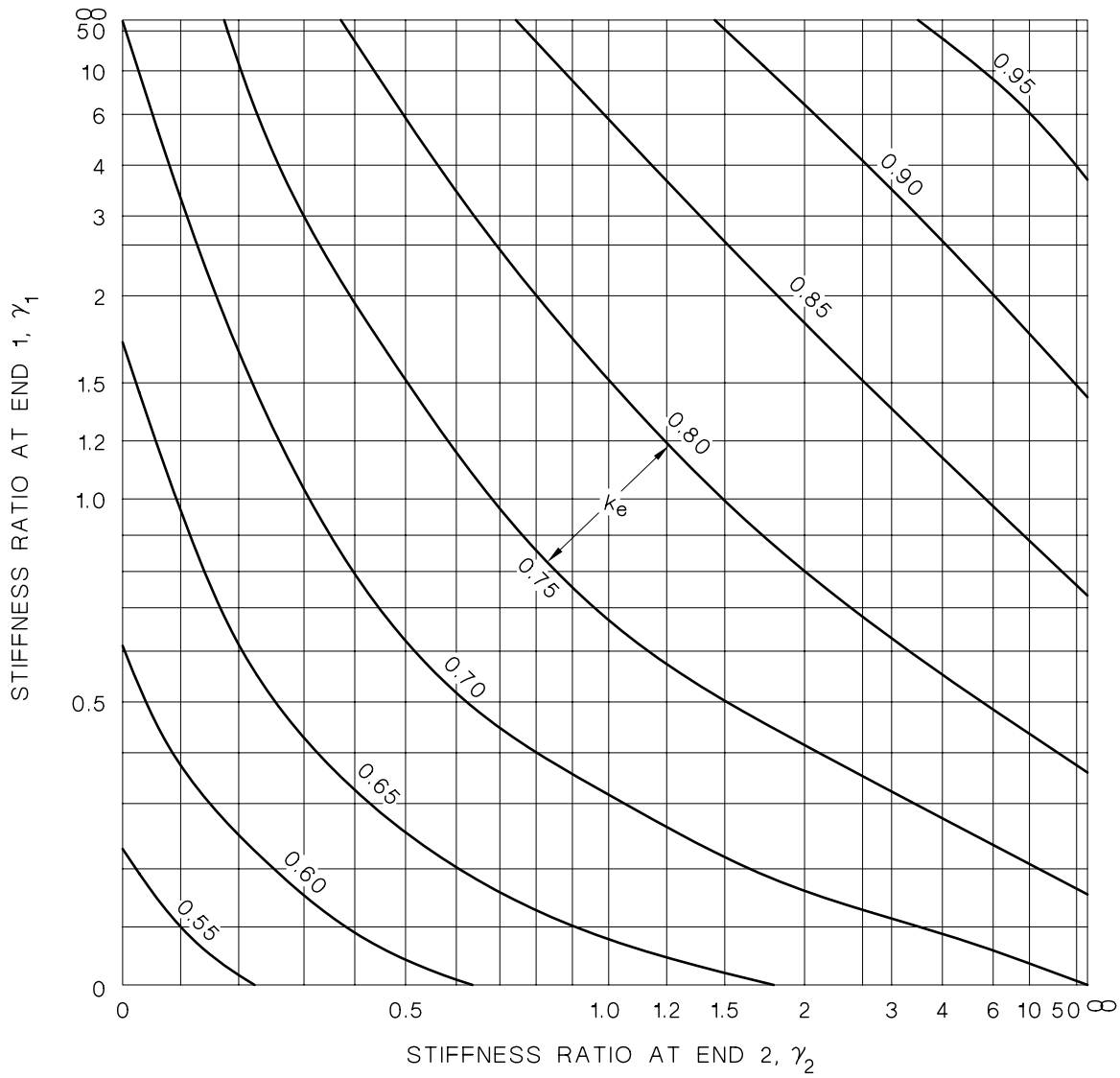

(a) For braced members

FIGURE 4.6.3.3 (in part) EFFECTIVE LENGTH FACTORS

Accessed by SWINBURNE UNIVERSITY OF TECHNOLOGY on 15 Aug 2007

@Seismicisolation

@Seismicisolation

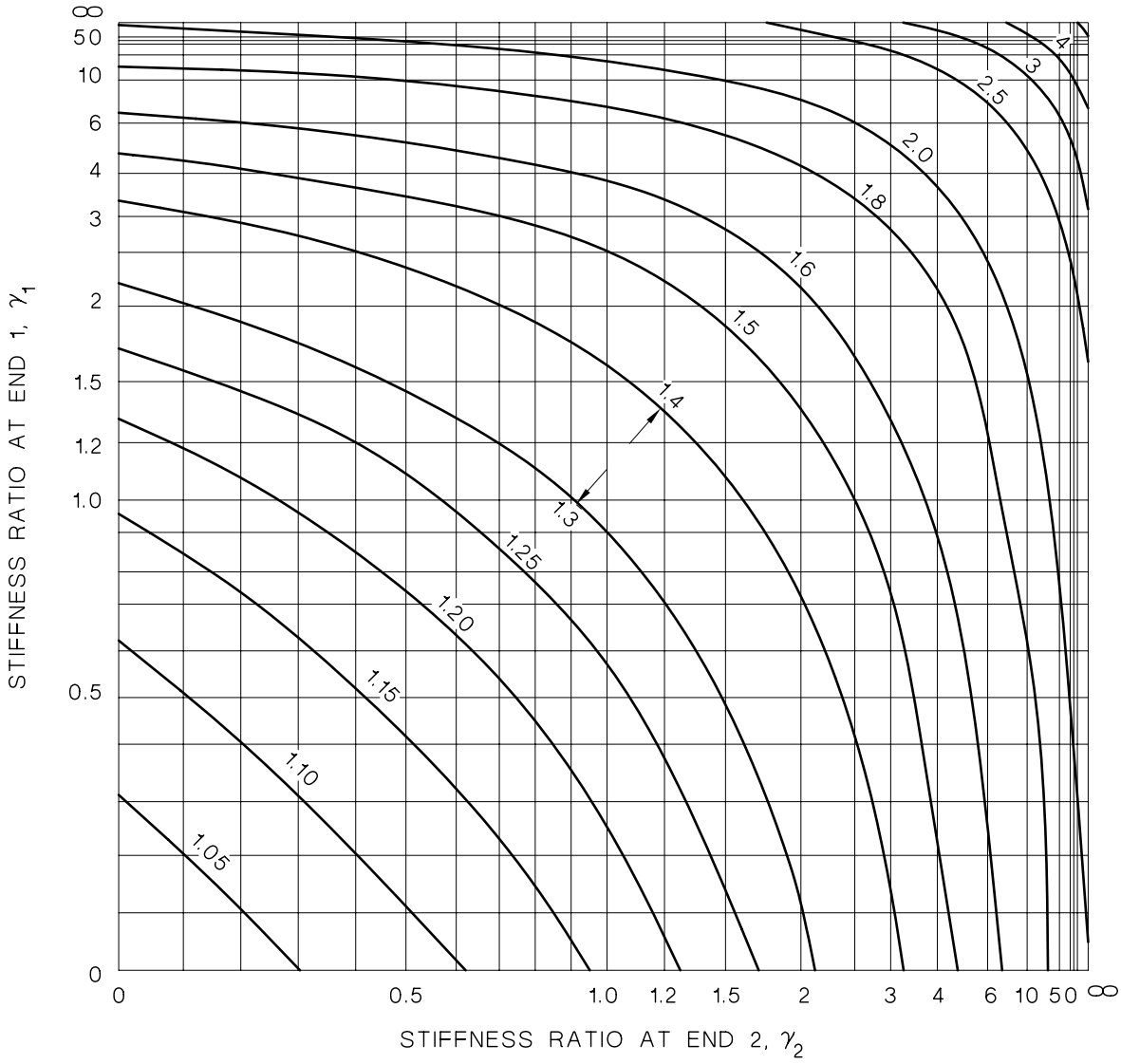

(b) For sway members

FIGURE 4.6.3.3 (in part) EFFECTIVE LENGTH FACTORS

4.6.3.4 *Stiffness ratios in rectangular frames* The γ-value of a compression member in a rectangular frame with regular loading and negligible axial forces in the beams shall be calculated as follows:

$$\gamma = \frac{\Sigma\left(\frac{I}{l}\right)_c}{\Sigma\beta_e\left(\frac{I}{l}\right)_b}$$

except that—

(a) for a compression member whose base is not rigidly connected to a footing, the γ-value shall not be taken as less than 10 unless a rational analysis would justify a different value; and

(b) for a compression member whose end is rigidly connected to a footing, the γ-value shall not be taken as less than 0.6, unless a rational analysis would justify a different value.

Accessed by SWINBURNE UNIVERSITY OF TECHNOLOGY on 15 Aug 2007

@Seismicisolation

@Seismicisolation

The quantity $\Sigma(I/l)_c$ shall be calculated from the sum of the stiffnesses in the plane of bending of all the compression members rigidly connected at the end of the member under consideration, including the member itself.

The quantity $\Sigma ß_e(I/l)_b$ shall be calculated from the sum of the stiffnesses in the plane of bending for all the beams rigidly connected at the end of the member under consideration. The contributions of any beams pin-connected to the member shall be neglected.

The modifying factor ($ß_e$) which accounts for the conditions at the far ends of the beams, shall be as given in Table 4.6.3.4.

TABLE 4.6.3.4

MODIFYING FACTORS ($ß_e$)

Fixity conditions at far end of beam	Beam restraining a braced member	Beam restraining a sway member
Pinned	1.5	0.5
Rigidly connected to a column	1.0	1.0
Fixed	2.0	0.67

4.6.3.5 *Members in triangulated structures* The effective length (l_e) of a member in a triangulated structure shall be taken as not less than its length (l) from centre to centre of intersections with other members, unless shown otherwise by a rational elastic buckling analysis consistent with Appendix G.

4.7 FRAME BUCKLING ANALYSIS

4.7.1 General The elastic buckling load factor (λ_c) shall be the ratio of the elastic buckling load set of the frame to the design load set for the frame, and shall be determined in accordance with Clause 4.7.2. The elastic buckling load factor (λ_c) is used in the determination of the moment amplification factor for a sway member (δ_s) in Clause 4.4.2.3(b) and in establishing limits for the methods of analysis in Clause 4.5.4 and Appendix E.

NOTE: The value of λ_c depends on the load set.

4.7.2 In-plane frame buckling The elastic buckling load factor (λ_c) of a rigid-jointed frame shall be determined by using—

(a) one of the approximate methods of Clauses 4.7.2.1 and 4.7.2.2; or

(b) a rational elastic buckling analysis of the whole frame.

NOTE: The value of λ_c depends on the load set.

4.7.2.1 *Rectangular frames with all members braced* In a rectangular frame with regular loading and negligible axial forces in the beams, the braced member buckling load (N_{omb}) for each column shall be determined in accordance with Clauses 4.6.2, 4.6.3.3 and 4.6.3.4.

The elastic buckling load factor (λ_m) for each column shall be determined as follows:

$$\lambda_m = \frac{N_{omb}}{N^*}$$

The elastic buckling load factor (λ_c) for the whole frame shall be taken as the lowest of all the λ_m values.

Accessed by SWINBURNE UNIVERSITY OF TECHNOLOGY on 15 Aug 2007

@Seismicisolation

@Seismicisolation

4.7.2.2 *Rectangular frames with sway members* In a rectangular frame with regular loading and negligible axial forces in the beams, the member buckling load (N_{oms}) for each column shall be determined in accordance with Clauses 4.6.2, 4.6.3.3 and 4.6.3.4.

The elastic buckling load factor (λ_{ms}) for each storey shall be determined as follows:

$$\lambda_{ms} = \frac{\Sigma\left(\frac{N_{oms}}{l}\right)}{\Sigma\left(\frac{N^*}{l}\right)}$$

where

N^* = member design axial force, with tension taken as negative, and the summation includes all columns within a storey.

The elastic buckling load factor (λ_c) for the whole frame shall be taken as the lowest of all the λ_{ms} values.

Accessed by SWINBURNE UNIVERSITY OF TECHNOLOGY on 15 Aug 2007

@Seismicisolation

@Seismicisolation

SECTION 5 MEMBERS SUBJECT TO BENDING

5.1 DESIGN FOR BENDING MOMENT A member bent about the section major principal x-axis which is analyzed by the elastic method (see Clause 4.4) shall satisfy—

$$M_x^* \leq \delta M_{sx}, \text{ and}$$

$$M_x^* \leq \delta M_{bx}$$

where

M_x^* = the design bending moment about the x-axis determined in accordance with Clause 4.4.

δ = the capacity factor (see Table 3.4)

M_{sx} = the nominal section moment capacity, as specified in Clause 5.2, for bending about the x-axis

M_{bx} = the nominal member moment capacity, as specified in Clause 5.3 or 5.6, for bending about the x-axis.

A member bent about the section minor principal y-axis which is analyzed by the elastic method (see Clause 4.4) shall satisfy—

$$M_y^* \leq \delta M_{sy}$$

where

M_y^* = the design bending moment about the y-axis determined in accordance with Clause 4.4.

M_{sy} = the nominal section moment capacity, as specified in Clause 5.2, for bending about the y-axis.

A member which is analyzed by the plastic method (see Clause 4.5) shall be compact at all sections where plastic hinges may form (see Clause 5.2.3), shall have full lateral restraint as specified in Clause 5.3.2, and its web shall satisfy Clause 5.10.6. The member shall satisfy—

$$M^* \leq \delta M_s$$

where

M^* = the design bending moment determined in accordance with Clause 4.5, and

M_s = the nominal section moment capacity as specified in Clause 5.2.1.

A member whose deflections are constrained to a non-principal plane shall be analyzed as specified in Clause 5.7.1, and shall satisfy Clause 8.3.4.

A member which is bent about a non-principal axis and whose deflections are unconstrained shall be analyzed as specified in Clause 5.7.2, and shall satisfy Clauses 8.3.4 and 8.4.5.

A member subjected to combined bending and shear shall satisfy the requirements of this Clause and Clause 5.12.

A member subjected to combined bending and axial compression or tension shall satisfy Section 8.

5.2 SECTION MOMENT CAPACITY FOR BENDING ABOUT A PRINCIPAL AXIS

5.2.1 General The nominal section moment capacity (M_s) shall be calculated as follows:

$$M_s = f_y Z_e$$

where the effective section modulus (Z_e) shall be as specified in Clauses 5.2.3, 5.2.4, or 5.2.5 as appropriate.

Accessed by SWINBURNE UNIVERSITY OF TECHNOLOGY on 15 Aug 2007

@Seismicisolation

@Seismicisolation

5.2.2 Section slenderness For a section with flat compression plate elements, the section slenderness (λ_s) shall be taken as the value of the plate element slenderness (λ_e) for the element of the cross-section which has the greatest value of λ_e/λ_{ey}—

where

$$\lambda_e = \left(\frac{b}{t}\right)\sqrt{\left(\frac{f_y}{250}\right)}$$

λ_{ey} = the plate element yield slenderness limit (see Table 5.2)

b = the clear width of the element outstand from the face of the supporting plate element or the clear width of the element between the faces of supporting plate elements

t = the element thickness.

The section plasticity and yield slenderness limits (λ_{sp}) and (λ_{sy}) respectively shall be taken as the values of the element slenderness limits (λ_{ep}) and (λ_{ey}) respectively given in Table 5.2 for the element of the cross-section which has the greatest value of λ_e/λ_{ey}.

For circular hollow sections, the section slenderness (λ_s) shall be calculated as follows:

$$\lambda_s = \left(\frac{d_o}{t}\right)\left(\frac{f_y}{250}\right)$$

where d_o is the outside diameter of the section. The section plasticity and yield slenderness limits (λ_{sp}) and (λ_{sy}) respectively shall be taken as the values of the element slenderness limits (λ_{ep}) and (λ_{ey}) respectively given in Table 5.2.

TABLE 5.2

VALUES OF PLATE ELEMENT SLENDERNESS LIMITS

Plate element type	Longitudinal edges supported	Residual stresses (see Notes)	Plasticity limit (λ_{ep})	Yield limit (λ_{ey})	Deformation limit (λ_{ed})
Flat (Uniform compression)	One	SR	10	16	35
		HR	9	16	35
		LW, CF	8	15	35
		HW	8	14	35
Flat (Maximum compression at unsupported edge, zero stress or tension at supported edge)	One	SR	10	25	—
		HR	9	25	—
		LW, CF	8	22	—
		HW	8	22	—
Flat (Uniform compression)	Both	SR	30	45	90
		HR	30	45	90
		LW, CF	30	40	90
		HW	30	35	90
Flat (Compression at one edge, tension at the other)	Both	Any	82	115	—

(continued)

Accessed by SWINBURNE UNIVERSITY OF TECHNOLOGY on 15 Aug 2007

@Seismicisolation

@Seismicisolation

TABLE 5.2 *(continued)*

Plate element type	Longitudinal edges supported	Residual stresses (see Notes)	Plasticity limit (λ_{ep})	Yield limit (λ_{ey})	Deformation limit (λ_{ed})
Circular hollow sections		SR	50	120	—
		HR, CF	50	120	—
		LW	42	120	—
		HW	42	120	—

NOTES:

1 SR—stress relieved
HR—hot-rolled or hot-finished
CF—cold formed
LW—lightly welded longitudinally
HW—heavily welded longitudinally

2 Welded members whose compressive residual stresses are less than 40 MPa may be considered to be lightly welded.

5.2.3 Compact sections For sections which satisfy $\lambda_s \leq \lambda_{sp}$, the effective section modulus (Z_e) shall be the lesser of S or $1.5Z$, where S and Z are the plastic and elastic section moduli respectively, determined in accordance with Clause 5.2.6.

5.2.4 Non-compact sections For sections which satisfy $\lambda_{sp} < \lambda_s \leq \lambda_{sy}$, the effective section modulus (Z_e) shall be calculated as follows:

$$Z_e = Z + \left[\left(\frac{\lambda_{sy} - \lambda_s}{\lambda_{sy} - \lambda_{sp}}\right)(Z_c - Z)\right]$$

where Z_c is the effective section modulus (Z_e) for a compact section specified in Clause 5.2.3.

5.2.5 Slender sections For sections with flat plate elements in uniform compression which satisfy $\lambda_s > \lambda_{sy}$, the effective section modulus (Z_e) shall be calculated either as follows:

$$Z_e = Z\left(\frac{\lambda_{sy}}{\lambda_s}\right)$$

or for the effective cross-section determined by omitting from each flat compression element the width in excess of the width corresponding to λ_{sy}.

For a section whose slenderness is determined by the value calculated for a flat plate element with maximum compression at an unsupported edge and zero stress or tension at the other edge and which satisfies $\lambda_s > \lambda_{sy}$, the effective section modulus (Z_e) shall be calculated as follows:

$$Z_e = Z\left(\frac{\lambda_{sy}}{\lambda_s}\right)^2$$

For circular hollow sections which satisfy $\lambda_s > \lambda_{sy}$, the effective section modulus shall be taken as the lesser of—

$$Z_e = Z\sqrt{\left(\frac{\lambda_{sy}}{\lambda_s}\right)} \text{ and}$$

$$Z_e = Z\left(\frac{2\lambda_{sy}}{\lambda_s}\right)^2$$

Accessed by SWINBURNE UNIVERSITY OF TECHNOLOGY on 15 Aug 2007

@Seismicisolation

@Seismicisolation

For elements where $\lambda_e > \lambda_{ed}$ in which λ_{ed} is the deformation slenderness limit given in Table 5.2, noticeable deformations may occur under service loading.

5.2.6 Elastic and plastic section moduli For sections without holes, or for sections with holes that reduce either of the flange areas by not more than $100\{1 - [f_y/(0.85f_u)]\}$%, the elastic and plastic section moduli may be calculated using the gross section.

For sections with holes that reduce either of the flange areas by more than $100\{1 - [f_y/(0.85f_u)]\}$%, the elastic and plastic section moduli shall be calculated using either—

(a) (A_n/A_g) times the value for the gross section, in which A_n is the sum of the net areas of the flanges and the gross area of the web, and A_g the gross area of the section; or

(b) the net section.

When net areas are calculated, any deductions for fastener holes shall be made in accordance with Clause 9.1.10.

5.3 MEMBER CAPACITY OF SEGMENTS WITH FULL LATERAL RESTRAINT

5.3.1 Member capacity The nominal member moment capacity (M_b) of a segment with full lateral restraint shall be taken as the nominal section moment capacity (M_s) (see Clause 5.2) of the critical section (see Clause 5.3.3).

A segment in a member subjected to bending is the length between adjacent cross-sections which are fully or partially restrained (see Clauses 5.4.2.1 and 5.4.2.2), or the length between an unrestrained end (see Clause 5.4.1) and the adjacent cross-section which is fully or partially restrained.

5.3.2 Segments with full lateral restraint

5.3.2.1 *General* A segment may be considered to have full lateral restraint if it satisfies one of the following clauses: Clause 5.3.2.2, 5.3.2.3 or Clause 5.3.2.4, or if its nominal member moment capacity (M_b) calculated in accordance with Clause 5.6 is not less than the nominal section moment capacity (M_s) (see Clause 5.2) at the critical section (see Clause 5.3.3).

5.3.2.2 *Segments with continuous lateral restraints* A segment with continuous lateral restraints may be considered to have full lateral restraint, provided that—

(a) both ends are fully or partially restrained (see Clauses 5.4.2.1, 5.4.2.2, 5.4.3.1, and 5.4.3.2); and

(b) the continuous restraints act at the critical flange (see Clause 5.5), and satisfy Clause 5.4.3.1.

5.3.2.3 *Segments with intermediate lateral restraints* A segment with intermediate lateral restraints (see Clauses 5.4.2.4 and 5.4.3.1) which divide the segment into a series of sub-segments may be considered to have full lateral restraint, provided that—

(a) both ends are fully or partially restrained (see Clauses 5.4.2.1, 5.4.2.2, 5.4.3.1 and 5.4.3.2);

(b) the length (l) of each sub-segment satisfies Clause 5.3.2.4; and

(c) the lateral restraints act at the critical flange (see Clause 5.5), and satisfy Clause 5.4.3.1.

5.3.2.4 *Segments with full or partial restraints at both ends* A segment with full or partial restraints at both ends (see Clauses 5.4.2.1, 5.4.2.2, 5.4.3.1 and 5.4.3.2) may be considered to have full lateral restraint, provided its length (l) satisfies—

$$\frac{l}{r_y} \leq (80 + 50\beta_m)\sqrt{\left(\frac{250}{f_y}\right)}$$ if the segment is of equal flanged I-section;

$$\frac{l}{r_y} \leq (60 + 40\beta_m)\sqrt{\left(\frac{250}{f_y}\right)}$$ if the segment is an equal flanged channel;

Accessed by SWINBURNE UNIVERSITY OF TECHNOLOGY on 15 Aug 2007

@Seismicisolation

@Seismicisolation

$$\frac{l}{r_y} \leq (80 + 50\beta_m)\left[\sqrt{\left(\frac{2\varrho A d_f}{2.5 Z_{ex}}\right)}\right]\sqrt{\left(\frac{250}{f_y}\right)}$$ if the segment is of I-section with unequal flanges;

$$\frac{l}{r_y} \leq (1800 + 1500\beta_m)\left(\frac{b_f}{b_w}\right)\left(\frac{250}{f_y}\right)$$ if the segment is of rectangular or square hollow section; or

$$\frac{l}{t} \leq (210 + 175\beta_m)\left[\sqrt{\left(\frac{b_2}{b_1}\right)}\right]\left(\frac{250}{f_y}\right)$$ if the segment is of angle section.

where

A = area of cross-section

b_f, b_w = the flange width and web depth, respectively

b_1, b_2 = the greater and lesser leg lengths, respectively

d_f = the distance between flange centroids

I_{cy} = the second moment of area of the compression flange about the section minor y-axis

I_y = the second moment of area of the section about the section minor principal y-axis

r_y = the radius of gyration about the minor principal y-axis

t = the thickness of an angle section

Z_e = the effective section modulus (see Clause 5.2)

ϱ = I_{cy}/I_y

The ratio β_m shall be taken as one of the following as appropriate:

(a) –1.0;

(b) –0.8 for segments with transverse loads; or

(c) the ratio of the smaller to the larger end moments in the length (l), (positive when the segment is bent in reverse curvature and negative when bent in single curvature) for segments without transverse loads.

5.3.3 Critical section The critical section in a segment shall be taken as the cross-section which has the largest value of the ratio of the design bending moment (M^*) to the nominal section capacity in bending (M_s) (see Clause 5.2).

5.4 RESTRAINTS

5.4.1 General A cross-section may be considered to be fully, partially, rotationally or laterally restrained if its restraints satisfy the appropriate requirements of Clause 5.4.2.

Restraints against lateral deflection, twist rotation, or lateral rotation may be considered to be effective if they satisfy the appropriate requirements of Clause 5.4.3.

The members and connections of restraint systems shall be designed to transfer the appropriate forces and bending moments specified in Clause 5.4.3, together with any other forces or bending moments which may act simultaneously, from the points where the forces or bending moments arise to anchorage or reaction points.

Any cross-section of a member which does not satisfy any of Clauses 5.4.2.1 to 5.4.2.4 shall be considered to be unrestrained, as for example in Figure 5.4.1, unless the member capacity in bending is determined by the method of design by buckling analysis (see Clause 5.6.4).

Accessed by SWINBURNE UNIVERSITY OF TECHNOLOGY on 15 Aug 2007

@Seismicisolation

@Seismicisolation

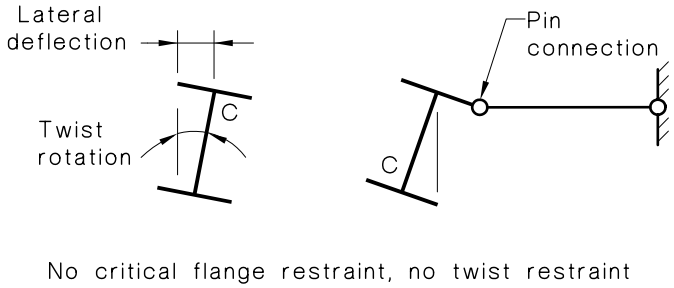

FIGURE 5.4.1 UNRESTRAINED CROSS-SECTIONS

5.4.2 Restraints at a cross-section

5.4.2.1 *Fully restrained* A cross-section of a member may be considered to be fully restrained if either—

(a) the restraint or support effectively prevents lateral deflection of the critical flange (see Clause 5.5), and effectively prevents twist rotation of the section, as for example in Figure 5.4.2.1(a); or partially prevents twist rotation of the section, as for example in Figure 5.4.2.1(b).

(b) the restraint or support effectively prevents lateral deflection of some other point in the cross-section, and effectively prevents twist rotation of the section, as for example in Figure 5.4.2.1(c).

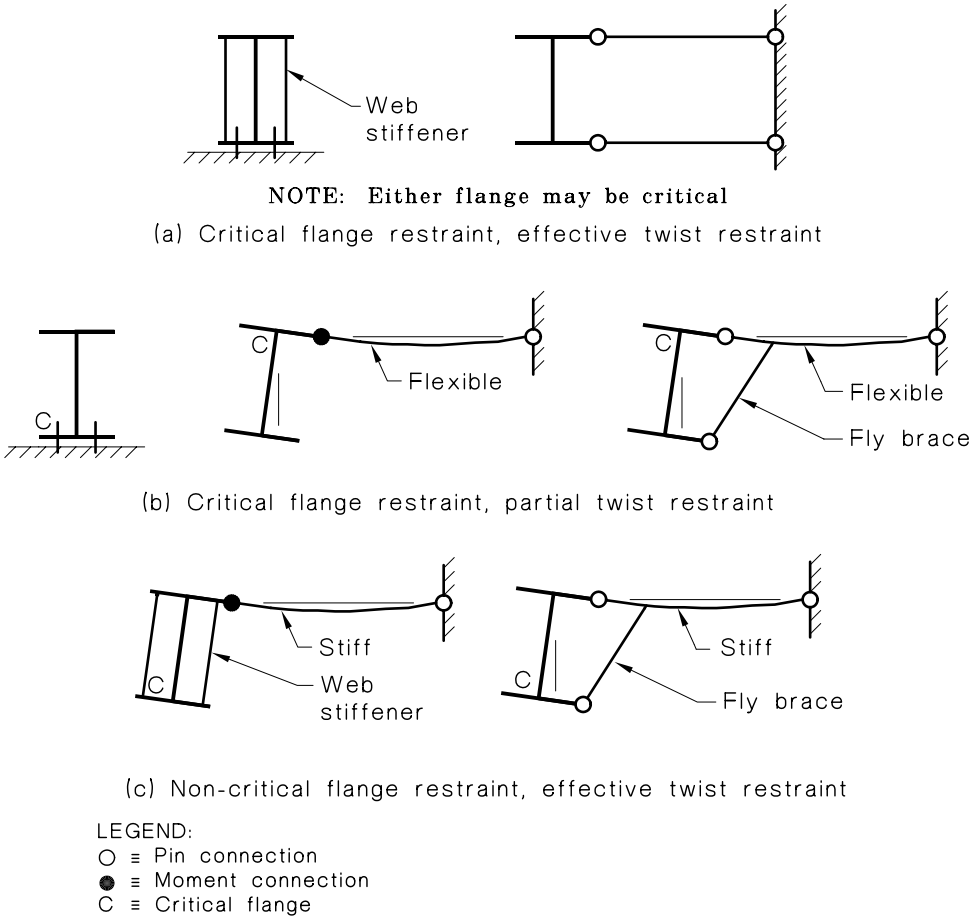

FIGURE 5.4.2.1 FULLY RESTRAINED CROSS-SECTIONS

Accessed by SWINBURNE UNIVERSITY OF TECHNOLOGY on 15 Aug 2007

@Seismicisolation

@Seismicisolation

5.4.2.2 *Partially restrained* A cross-section of a member may be considered to be partially restrained if the restraint or support effectively prevents lateral deflection of some point in the cross-section other than the critical flange, and partially prevents twist rotation of the section, as for example in Figure 5.4.2.2.

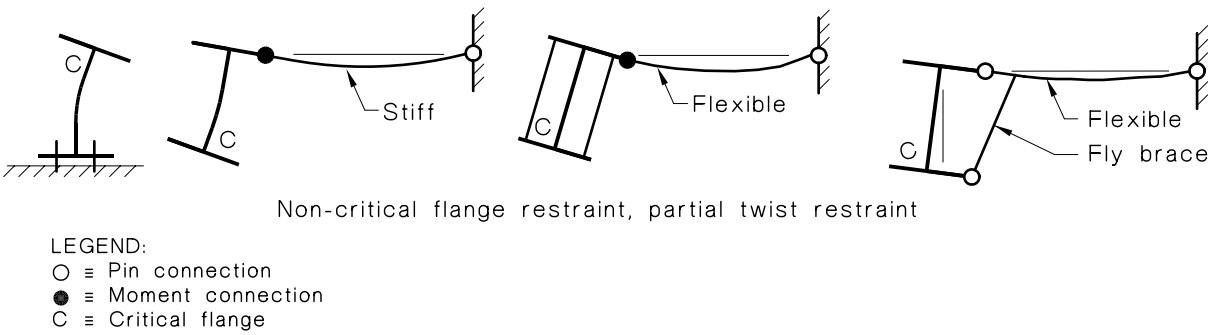

FIGURE 5.4.2.2 PARTIALLY RESTRAINED CROSS-SECTIONS

5.4.2.3 *Rotationally restrained* A cross-section of a member which may be considered to be fully or partially restrained may be considered to be rotationally restrained when the restraint or support provides significant restraint against lateral rotation of the critical flange (see Clause 5.5) out of the plane of bending, as for example in Figure 5.4.2.3.

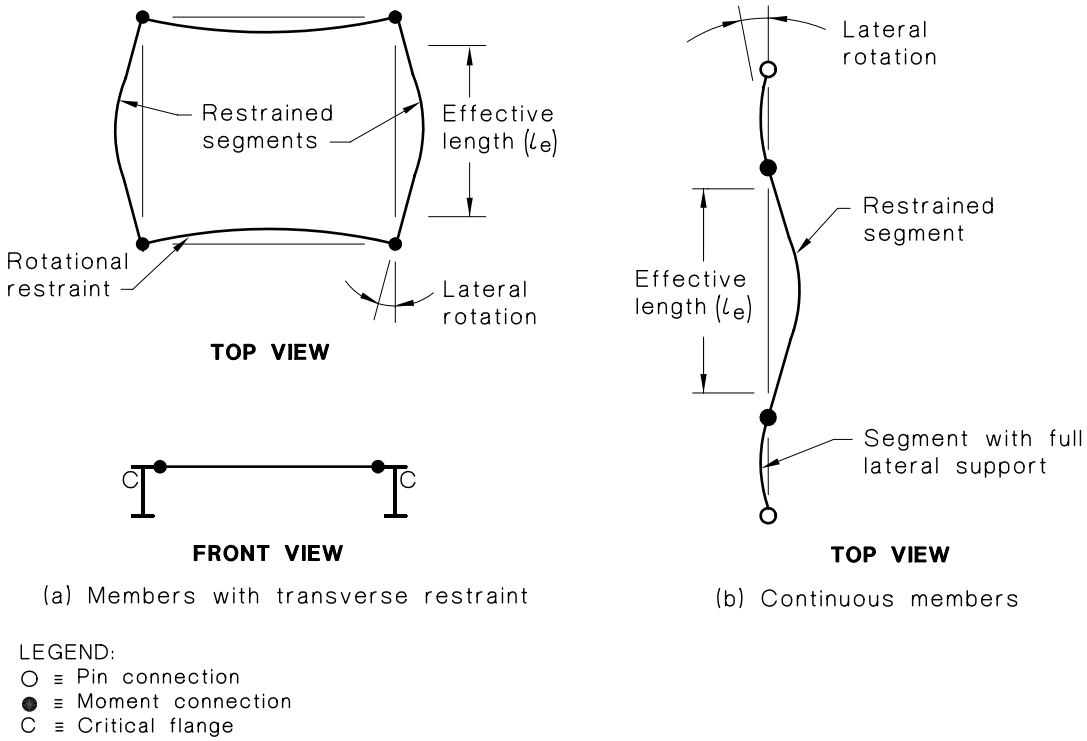

FIGURE 5.4.2.3 ROTATIONALLY RESTRAINED CROSS-SECTIONS

5.4.2.4 *Laterally restrained* A cross-section of a segment whose ends are fully or partially restrained may be considered to be laterally restrained when the restraint effectively prevents lateral deflection of the critical flange (see Clause 5.5) but is ineffective in preventing twist rotation of the section, as for example in Figure 5.4.2.4. Cross-sections in member segments with one end unrestrained shall not be considered to be laterally restrained.

Accessed by SWINBURNE UNIVERSITY OF TECHNOLOGY on 15 Aug 2007

@Seismicisolation

@Seismicisolation

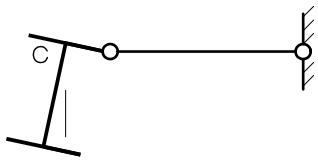

Critical flange restraint, no twist restraint

LEGEND:
○ ≡ Pin connection
C ≡ Critical flange

FIGURE 5.4.2.4 LATERALLY RESTRAINED CROSS-SECTION

5.4.3 Restraining elements

5.4.3.1 *Restraint against lateral deflection* The lateral restraint at any cross-section considered to be fully, partially or laterally restrained in terms of Clause 5.4.2 shall be designed to transfer a transverse force acting at the critical flange (see Clause 5.5) equal to 0.025 times the maximum force in the critical flanges of the adjacent segments or sub-segments, except where the restraints are more closely spaced than is required to ensure that M^* equals ϕM_b.

When the restraints are more closely spaced, then a lesser force may be designed for. The actual arrangement of restraints shall be assumed to be equivalent to a set of restraints which will ensure that M^* equals ϕM_b. Each equivalent restraint shall correspond to an appropriate group of the actual restraints. This group shall then be designed as a whole to transfer the transverse force of 0.025 times the maximum force in the critical flanges of the equivalent adjacent segments or sub-segments.

5.4.3.2 *Restraint against twist rotation* A torsional restraint at a cross-section may be deemed to provide effective restraint against twist rotation if it is designed to transfer a transverse force equal to 0.025 times the maximum force in the critical flange from any unrestrained flange to the lateral restraint.

A torsional restraint at a cross-section may be deemed to provide partial restraint against twist rotation if it is able to provide an elastic restraint against twist rotation without rotational slip. Flexible elements such as unstiffened webs may form part of such a restraint provided that they are connected in such a way as to prevent rotational slip.

Any restraint at a cross-section which permits rotational slip shall be deemed to be ineffective in restraining twist rotation.

NOTE: Guidance on the effects of the stiffness of a torsional restraint on the resistance to lateral buckling is given in Paragraph H5.1 of Appendix H.

5.4.3.3 *Parallel restrained members* When a series of parallel members is restrained by a line of restraints, each restraining element shall be designed to transfer a transverse force equal to the sum of 0.025 times the flange force from the connected member and 0.0125 times the sum of the flange forces in the connected members beyond, except that no more than seven members need be considered.

5.4.3.4 *Restraint against lateral rotation* A rotational restraint at a cross-section which is considered to be fully or partially restrained (see Clauses 5.4.2.1, 5.4.2.2 and 5.4.2.3) may be deemed to provide restraint against lateral rotation out of the plane of bending, providing its flexural stiffness in the plane of rotation is comparable with the corresponding stiffness of the restrained member.

NOTE: Guidance on the effects of the stiffness of a rotational restraint on the resistance to lateral buckling is given in Paragraph H5.2 of Appendix H.

A segment which has full lateral restraint (see Clause 5.3.2) may be deemed to provide rotational restraint to an adjacent segment which is laterally continuous with it.

A segment which does not have full lateral restraint shall be assumed to be unable to provide rotational restraint to an adjacent segment, unless the member resistance is determined by the method of design by buckling analysis in accordance with Clause 5.6.4.

Accessed by SWINBURNE UNIVERSITY OF TECHNOLOGY on 15 Aug 2007

@Seismicisolation

@Seismicisolation

5.5 CRITICAL FLANGE

5.5.1 General The critical flange at any cross-section is the flange which in the absence of any restraint at that section would deflect the farther during buckling.

The critical flange may be determined by an elastic buckling analysis (see Clause 5.6.4) or as specified in Clauses 5.5.2 and 5.5.3.

5.5.2 Segments with both ends restrained The critical flange at any section of a segment restrained at both ends shall be the compression flange.

5.5.3 Segments with one end unrestrained When gravity loads are dominant, the critical flange of a segment with one end unrestrained shall be the top flange.

When wind loads are dominant, the critical flange shall be the exterior flange in the case of external pressure or internal suction, and shall be the interior flange in the case of internal pressure or external suction.

5.6 MEMBER CAPACITY OF SEGMENTS WITHOUT FULL LATERAL RESTRAINT

5.6.1 Segments fully or partially restrained at both ends

5.6.1.1 *Open sections with equal flanges* For open sections with equal flanges, the following shall be considered:

(a) *Segments of constant cross-section* The nominal member moment capacity (M_b) shall be calculated as follows:

$$M_b = \alpha_m \alpha_s M_s \leq M_s \qquad \ldots 5.6.1.1(1)$$

where

α_m = a moment modification factor

α_s = a slenderness reduction factor

M_s = the nominal section moment capacity determined in accordance with Clause 5.2 for the gross section.

The moment modification factor (α_m) shall be taken as one of the following:

(i) 1.0;

(ii) a value obtained from Table 5.6.1;

(iii)
$$\alpha_m = \frac{1.7M_m^*}{\sqrt{\left[\left(M_2^*\right)^2 + \left(M_3^*\right)^2 + \left(M_4^*\right)^2\right]}} \leq 2.5$$

where

M_m^* = maximum design bending moment in the segment

M_2^*, M_4^* = design bending moments at the quarter points of the segment

M_3^* = design bending moment at the midpoint of the segment; or

(iv) a value obtained from an elastic buckling analysis in accordance with Clause 5.6.4,

except that for sub-segments formed by intermediate lateral restraints in segments fully or partially restrained at both ends, the sub-segment moment distribution shall be used instead of the segment moment distribution when using (ii) or (iii).

The slenderness reduction factor (α_s) shall be determined as follows:

$$\alpha_s = 0.6\left[\sqrt{\left[\left(\frac{M_s}{M_{oa}}\right)^2 + 3\right]} - \left(\frac{M_s}{M_{oa}}\right)\right] \qquad \ldots 5.6.1.1(2)$$

Accessed by SWINBURNE UNIVERSITY OF TECHNOLOGY on 15 Aug 2007

@Seismicisolation

@Seismicisolation

in which M_{oa} shall be taken as either—

(A) $M_{oa} = M_o$, where M_o is the reference buckling moment; or

(B) the value determined from an elastic buckling analysis in accordance with Clause 5.6.4.

The reference buckling moment (M_o) shall be determined as follows:

$$M_o = \sqrt{\left[\left(\frac{\pi^2 EI_y}{l_e^2}\right)\left[GJ + \left(\frac{\pi^2 EI_w}{l_e^2}\right)\right]\right]} \qquad \ldots 5.6.1.1(3)$$

where

E, G = the elastic moduli (see Clause 1.4)

I_y, J, and I_w = section constants (see Clause 1.4)

l_e = the effective length determined in accordance with Clause 5.6.3.

NOTE: Values of E and G and expressions for J and I_w are given in Paragraph H4 of Appendix H.

(b) *Segments of varying cross-section* The nominal member moment capacity (M_b) shall be determined in accordance with Clause 5.6.1.1(a) and using either—

(i) the properties of the minimum cross-section;

(ii) the properties of the critical cross-section as specified in Clause 5.3.3, provided that the value of M_{oa} determined in accordance with Clause 5.6.1.1(a) is reduced, before it is used in Equation 5.6.1.1(2), by multiplying it by the reduction factor (α_{st}) as follows:

$$\alpha_{st} = 1.0 - [1.2r_r(1 - r_s)]$$

where

r_r = l_r/l for stepped members

= 0.5 for tapered members

r_s = $\dfrac{A_{fm}}{A_{fc}}\left[0.6 + \left(\dfrac{0.4d_m}{d_c}\right)\right]$

A_{fm}, A_{fc} = the flange areas at the minimum and critical cross-sections, respectively

d_m, d_c = the section depths at the minimum and critical cross-sections, respectively

l_r = the length of the segment over which the cross-section is reduced

l = the length of the segment; or

(iii) the method of design by buckling analysis (see Clause 5.6.4).

5.6.1.2 *I-sections with unequal flanges* The nominal member moment capacity (M_b) shall be determined in accordance with Clause 5.6.1.1(a), except that the reference buckling moment (M_o) shall be determined by using either—

(a) $$M_o = \sqrt{\left(\frac{\pi^2 EI_y}{l_e^2}\right)}\left[\sqrt{\left[(GJ) + \left(\frac{\pi^2 EI_w}{l_e^2}\right) + \left(\frac{\beta_x^2}{4}\frac{\pi^2 EI_y}{l_e^2}\right)\right]} + \frac{\beta_x}{2}\sqrt{\left(\frac{\pi^2 EI_y}{l_e^2}\right)}\right]; \text{ or}$$

(b) the method of design by buckling analysis (see Clause 5.6.4).

Accessed by SWINBURNE UNIVERSITY OF TECHNOLOGY on 15 Aug 2007

@Seismicisolation

@Seismicisolation

The monosymmetry section constant (β_x) shall be determined using either—

(i) $$\beta_x = 0.8d_f\left[\left(\frac{2I_{cy}}{I_y}\right) - 1\right]$$

where

d_f = the distance between flange centroids

I_{cy} = the second moment of area of the compression flange about the section minor principal y-axis; or

(ii) $$\beta_x = \frac{1}{I_x}\int\left(x^2y + y^3\right)dA - 2y_o$$

where y_o is the coordinate of the shear centre (see Reference H6.11 of Appendix H). The values of β_x are positive when the larger flange is in compression, and negative when the smaller flange is in compression.

5.6.1.3 *Angle sections* The nominal member moment capacity (M_b) of an angle section shall be determined in accordance with Clause 5.6.1.1(a) using I_w equals 0.

5.6.1.4 *Hollow sections* The nominal member moment capacity (M_b) of a rectangular hollow section shall be determined in accordance with Clause 5.6.1.1(a) using I_w equals 0.

5.6.2 Segments unrestrained at one end The nominal member moment capacity (M_b) of a segment unrestrained at one end and at the other end both—

(a) fully or partially restrained; and

(b) laterally continuous or restrained against lateral rotation

shall be determined using either—

(i) Equations 5.6.1.1(1) and 5.6.1.1(2) with M_{oa} equal to the value of M_o obtained from Equation 5.6.1.1(3), and the appropriate value of α_m given in Table 5.6.2; or

(ii) $M_b = \alpha_s M_s \leq M_s$

where the slenderness reduction factor (α_s) shall be determined as follows:

$$\alpha_s = 0.6\left[\sqrt{\left[\left(\frac{M_s}{M_{ob}}\right)^2 + 3\right]} - \left(\frac{M_s}{M_{ob}}\right)\right]$$

where M_s is the nominal section moment capacity determined in accordance with Clause 5.2 for the gross section, and M_{ob} is determined by an elastic buckling analysis in accordance with Clause 5.6.4.

Accessed by SWINBURNE UNIVERSITY OF TECHNOLOGY on 15 Aug 2007

@Seismicisolation

@Seismicisolation

TABLE 5.6.1
MOMENT MODIFICATION FACTORS (α_m) FOR SEGMENTS FULLY OR PARTIALLY RESTRAINED AT BOTH ENDS

Beam segment	Moment distribution	Moment modification factor, α_m	Range
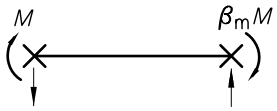	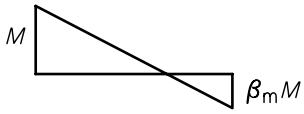	$1.75+1.05\beta_m+0.3\beta_m^2$ 2.5	$-1 \leqslant \beta_m \leqslant 0.6$ $0.6 < \beta_m \leqslant 1$
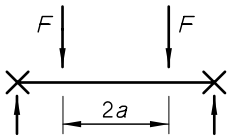	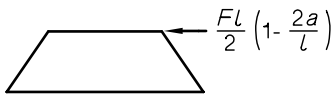	$1.0+0.35\left(1-\frac{2a}{l}\right)^2$	$0 \leqslant \frac{2a}{l} \leqslant 1$
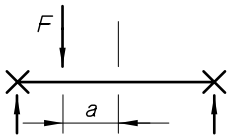	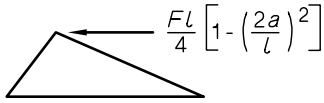	$1.35+0.4\left(\frac{2a}{l}\right)^2$	$0 \leqslant \frac{2a}{l} \leqslant 1$
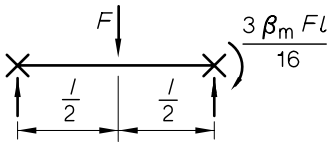	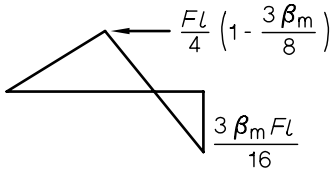	$1.35+0.15\beta_m$ $-1.2+3.0\beta_m$	$0 \leqslant \beta_m < 0.9$ $0.9 \leqslant \beta_m \leqslant 1$
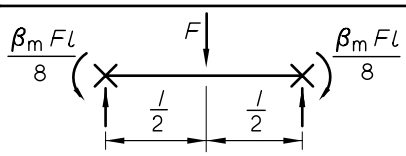	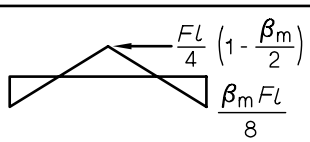	$1.35+0.36\beta_m$	$0 \leqslant \beta_m \leqslant 1$
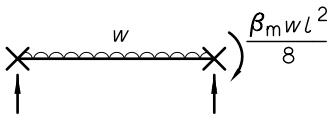	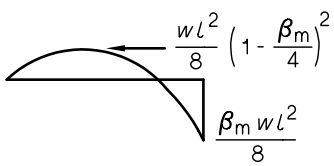	$1.13+0.10\beta_m$ $-1.25+3.5\beta_m$	$0 \leqslant \beta_m \leqslant 0.7$ $0.7 \leqslant \beta_m \leqslant 1$
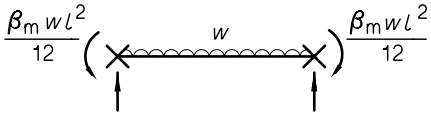	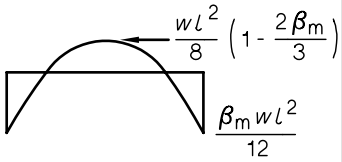	$1.13+0.12\beta_m$ $-2.38+4.8\beta_m$	$0 \leqslant \beta_m \leqslant 0.75$ $0.75 \leqslant \beta_m \leqslant 1$
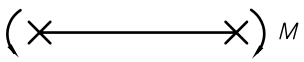		1.00	
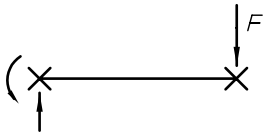	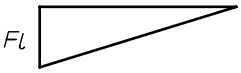	1.75	
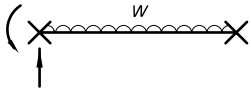	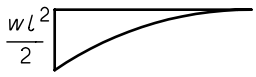	3.50	

NOTE: × ≡ full or partial restraint

@Seismicisolation

Accessed by SWINBURNE UNIVERSITY OF TECHNOLOGY on 15 Aug 2007

@Seismicisolation

TABLE 5.6.2

MOMENT MODIFICATION FACTORS (α_m) FOR SEGMENTS UNRESTRAINED AT ONE END

Member segment	Moment distribution	Moment modification factor, α_m
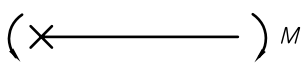	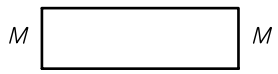	0.25
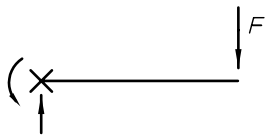	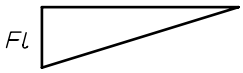	1.25
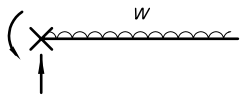	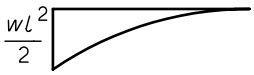	2.25

NOTE: × ≡ Full or partial restraint

5.6.3 Effective length The effective length (l_e) of a segment or sub-segment shall be determined as follows:

$$l_e = k_t\, k_l\, k_r\, l$$

where

k_t = a twist restraint factor given in Table 5.6.3(1)

k_l = a load height factor given in Table 5.6.3(2)

k_r = a lateral rotation restraint factor given in Table 5.6.3(3)

and the length (l) shall be taken as either—

(a) the segment length, for segments without intermediate restraints, or for segments unrestrained at one end, with or without intermediate lateral restraints; or

(b) the sub-segment length, for sub-segments formed by intermediate lateral restraints (see Clauses 5.4.2.4 and 5.4.3.1) in a segment which is fully or partially restrained at both ends.

The lateral rotation restraint factor (k_r) shall only be taken as less than unity when effective rotational restraints, complying with Clause 5.4.3.4, act at one or both ends of a segment which is fully, or partially restrained at both ends. The lateral rotation restraint factor shall be taken as unity for all segments which are unrestrained at one end.

Accessed by SWINBURNE UNIVERSITY OF TECHNOLOGY on 15 Aug 2007

@Seismicisolation

@Seismicisolation

TABLE 5.6.3(1)

TWIST RESTRAINT FACTORS (k_t)

Restraint arrangement	Factor , k_t
FF, FL, LL, FU	1.0
FP, PL, PU	$1 + \dfrac{\left[\left(\dfrac{d_1}{l}\right)\left(\dfrac{t_f}{2t_w}\right)^3\right]}{n_w}$
PP	$1 + \dfrac{\left[2\left(\dfrac{d_1}{l}\right)\left(\dfrac{t_f}{2t_w}\right)^3\right]}{n_w}$

TABLE 5.6.3(2)

LOAD HEIGHT FACTORS (k_l) FOR GRAVITY LOADS

Longitudinal position of the load	Restraint arrangement	Load height position	
		Shear centre	Top flange
Within segment	FF, FP, FL, PP, PL, LL	1.0	1.4
	FU, PU	1.0	2.0
At segment end	FF, FP, FL, PP, PL, LL	1.0	1.0
	FU, PU	1.0	2.0

TABLE 5.6.3(3)

LATERAL ROTATION RESTRAINT FACTORS (k_r)

Restraint arrangement	Ends with lateral rotation restraints (see Clause 5.4.3.4)	Factor, k_r
FU, PU	Any	1.0
FF, FP, FL, PP, PL, LL	None	1.0
FF, FP, PP	One	0.85
FF, FP, PP	Both	0.70

In Tables 5.6.3(1), 5.6.3(2) and 5.6.3(3),

d_1 = clear depth between flanges ignoring fillets or welds
n_w = number of webs
t_f = thickness of critical flange
t_w = thickness of web
F ≡ fully restrained
L ≡ laterally restrained
P ≡ partially restrained
U ≡ unrestrained

and two of the symbols F, L, P, U are used to indicate the conditions at the two ends. (For F, L, P and U restraint requirements, see Clause 5.4.3.)

Accessed by SWINBURNE UNIVERSITY OF TECHNOLOGY on 15 Aug 2007

@Seismicisolation

@Seismicisolation

5.6.4 Design by buckling analysis When a member is designed by this method, the elastic buckling bending moment (M_{ob}) at the most critical section of the member shall be determined by using the results of an elastic flexural-torsional buckling analysis. This analysis shall take proper account of the member support, restraint, and loading conditions.

The value of M_{oa} to be used in Clause 5.6.1.1(a) shall be taken as follows:

$$M_{oa} = \frac{M_{ob}}{\alpha_m}$$

The moment modification factor (α_m) shall be determined by using either (a) or (b) given below—

(a) Clause 5.6.1.1(a); or

(b) the value given by $\alpha_m = \dfrac{M_{os}}{M_{oo}}$

where

M_{os} = the elastic buckling moment for a segment, fully restrained at both ends, which is unrestrained against lateral rotation and loaded at the shear centre

M_{oo} = the reference elastic buckling moment given by Equation 5.6.1.1(3) with $l_e = l$.

NOTE: Summaries and approximations of the results of elastic buckling analyses are given in Appendix H and in the references given in Paragraph H6.

5.7 BENDING IN A NON-PRINCIPAL PLANE

5.7.1 Deflections constrained to a non-principal plane When the deflection of a member is constrained to a non-principal plane by continuous lateral restraints which prevent lateral deflection, then the forces exerted by the restraints shall be determined, and the principal axis bending moments acting on the member shall be calculated from these forces and the applied forces by a rational analysis.

The calculated principal axis bending moments shall satisfy the requirements of Clause 8.3.4.

5.7.2 Deflections unconstrained When the deflections of a member loaded in a non-principal plane are unconstrained, the principal axis bending moments shall be calculated by a rational analysis.

The calculated principal axis bending moments shall satisfy Clauses 8.3.4 and 8.4.5.

5.8 SEPARATORS AND DIAPHRAGMS If separators or diaphragms are used to permit two or more I-section members or channels placed side by side to act together as a unit in the distribution of external loads between them, the separators and diaphragms shall meet the following requirements:

(a) Separators, made up of spacers and through bolts, shall not be used to transmit forces between the members, other than those due to transverse forces (if any) and a design transverse force (Q^*), taken as not less than 0.025 times the maximum design force occurring in the most heavily loaded compression flange of any member forming the unit. The design transverse force (Q^*) shall be taken as shared equally between the separators.

(b) Diaphragms shall be used where external vertical as well as transverse forces are to be transmitted from one member to another. The diaphragms and their fastenings shall be proportioned to distribute the forces applied to them and in addition, to resist the design transverse force (Q^*) specified above, and resulting shear forces. The design transverse force (Q^*) shall be taken as shared equally between the diaphragms.

5.9 DESIGN OF WEBS

5.9.1 General The geometry and arrangement of beam webs, including any transverse or longitudinal stiffeners, shall satisfy Clause 5.10.

A web subject to shear force shall satisfy Clause 5.11.

A web subject to shear force and bending moment shall satisfy Clause 5.12.

Accessed by SWINBURNE UNIVERSITY OF TECHNOLOGY on 15 Aug 2007

@Seismicisolation

@Seismicisolation

A web subject to bearing load shall satisfy Clause 5.13.

Load-bearing stiffeners and end posts shall satisfy Clause 5.14.

Intermediate transverse stiffeners shall satisfy Clause 5.15.

Longitudinal stiffeners shall satisfy Clause 5.16.

5.9.2 Definition of web panel A web panel of thickness (t_w) shall be considered to extend over an unstiffened area of a web plate with longitudinal dimension (s) and clear transverse dimension (d_p). The web panel may be bounded by flanges, transverse or longitudinal stiffeners, or free edges.

5.9.3 Minimum thickness of web panel Unless a rational analysis would warrant a lesser value, the thickness of a web panel shall satisfy Clauses 5.10.1, 5.10.4, 5.10.5 and 5.10.6.

5.10 ARRANGEMENT OF WEBS

5.10.1 Unstiffened webs The thickness of an unstiffened web bounded on both longitudinal sides by flanges shall not be less than—

$$\left(\frac{d_1}{180}\right)\sqrt{\left(\frac{f_y}{250}\right)}$$

where d_1 is the clear depth of the web between flanges, ignoring fillets or welds.

The thickness of an unstiffened web bounded on one longitudinal side by a free edge shall not be less than—

$$\left(\frac{d_1}{90}\right)\sqrt{\left(\frac{f_y}{250}\right)}$$

where d_1 is the clear depth of the web, ignoring fillets or welds.

5.10.2 Load bearing stiffeners Load bearing stiffeners shall be provided in pairs where the design compressive bearing forces applied through a flange by loads or reactions exceed the design bearing capacity (ϕR_b) of the web alone specified in Clause 5.13.2, or when required to form an end post (Clause 5.15.2.2).

5.10.3 Side reinforcing plates Additional side reinforcing plates may be provided to augment the strength of the web. Proper account shall be taken of any lack of symmetry. The proportion of shear force assumed to be resisted by such plates shall be limited by the amount of horizontal shear which can be transmitted through the fasteners to the web and to the flanges.

5.10.4 Transversely stiffened webs The thickness of a web transversely stiffened but without longitudinal stiffeners shall not be less than—

(a) $\left(\frac{d_1}{200}\right)\sqrt{\left(\frac{f_y}{250}\right)}$ when $1.0 \le s/d_1 \le 3.0$;

(b) $\left(\frac{s}{200}\right)\sqrt{\left(\frac{f_y}{250}\right)}$ when $0.74 < s/d_1 \le 1.0$; or

(c) $\left(\frac{d_1}{270}\right)\sqrt{\left(\frac{f_y}{250}\right)}$ when $s/d_1 \le 0.74$.

All web lengths for which s/d_p is greater than 3.0 shall be considered to be unstiffened, where d_p is the greatest panel depth in the length.

Accessed by SWINBURNE UNIVERSITY OF TECHNOLOGY on 15 Aug 2007

@Seismicisolation

@Seismicisolation

5.10.5 Webs with longitudinal and transverse stiffeners The thickness of a web with a set of longitudinal stiffeners placed on one or both sides of the web at a distance $0.2d_2$ from the compression flange shall not be less than—

(a) $\left(\frac{d_1}{250}\right)\sqrt{\left(\frac{f_y}{250}\right)}$ when $1.0 \leq s/d_1 \leq 2.4$;

(b) $\left(\frac{s}{250}\right)\sqrt{\left(\frac{f_y}{250}\right)}$ when $0.74 \leq s/d_1 \leq 1.0$; or

(c) $\left(\frac{d_1}{340}\right)\sqrt{\left(\frac{f_y}{250}\right)}$ when $s/d_1 < 0.74$.

The thickness of a web with an additional set of longitudinal stiffeners placed on one or both sides of the web at the neutral axis shall be not less than—

$$\left(\frac{d_1}{400}\right)\sqrt{\left(\frac{f_y}{250}\right)} \quad \text{when } s/d_1 \leq 1.5.$$

5.10.6 Webs of members designed plastically The web thickness of a member assumed to contain a plastic hinge shall not be less than $(d_1/82)\sqrt{(f_y/250)}$.

Load bearing stiffeners shall be provided when a bearing load or shear force acts within $d_1/2$ of a plastic hinge location and the design bearing load or design shear force exceeds 0.1 times the design shear yield capacity (ϕV_w) of the member specified in Clause 5.11.4.

These stiffeners shall be located within a distance $d_1/2$ on either side of the hinge location and shall be designed in accordance with Clause 5.14 to carry the greater of the design bearing load or the design shear force considered as a bearing load.

If the stiffeners are flat plates, their slenderness (λ_s) as defined in Clause 5.2.2 using the stiffener yield stress (f_{ys}) shall be less than the plasticity limit (λ_{sp}) specified in Clause 5.2.2.

5.10.7 Openings in webs Except for a castellated member, an opening in a web may be unstiffened provided that the greatest internal dimension of the opening (l_w) satisfies either—

(a) $l_w/d_1 \leq 0.10$ for webs without longitudinal stiffeners; or

(b) $l_w/d_1 \leq 0.33$ for longitudinally stiffened webs,

provided that the longitudinal distance between boundaries of adjacent openings is at least three times the greatest internal dimension of the opening.

In addition, not more than one unstiffened opening shall be provided at any cross-section unless a rational analysis shows that stiffeners are not necessary.

The design of a castellated member or a member with stiffened openings shall be based on a rational analysis.

5.11 SHEAR CAPACITY OF WEBS

5.11.1 Shear capacity A web subject to a design shear force (V^*) shall satisfy—

$$V^* \leq \phi V_v$$

where

ϕ = the capacity factor (see Table 3.4)

V_v = the nominal shear capacity of the web determined from either Clause 5.11.2 or Clause 5.11.3.

Accessed by SWINBURNE UNIVERSITY OF TECHNOLOGY on 15 Aug 2007

@Seismicisolation

@Seismicisolation

5.11.2 Approximately uniform shear stress distribution The nominal shear capacity (V_v) of a web where the shear stress distribution is approximately uniform shall be taken as—

$$V_v = V_u$$

where V_u is the nominal shear capacity of a web with a uniform shear stress distribution given as follows:

(a) When the maximum web panel depth to thickness ratio d_p/t_w satisfies—

$$\frac{d_p}{t_w} \leq \frac{82}{\sqrt{\left(\frac{f_y}{250}\right)}}$$

the nominal shear capacity of the web (V_u) shall be taken as—

$$V_u = V_w$$

where the nominal shear yield capacity of the web (V_w) is specified in Clause 5.11.4.

(b) When the maximum web panel depth to thickness ratio d_p/t_w satisfies—

$$\frac{d_p}{t_w} > \frac{82}{\sqrt{\left(\frac{f_y}{250}\right)}}$$

the nominal shear capacity (V_u) of the web shall be taken as—

$$V_u = V_b$$

where the nominal shear buckling capacity of the web (V_b) is specified in Clause 5.11.5.

5.11.3 Non-uniform shear stress distribution The nominal shear capacity (V_v) of a web with a non-uniform shear stress distribution, such as in a member with unequal flanges, varying web thickness or holes not used for fasteners, shall be calculated as follows:

$$V_v = \frac{2V_u}{0.9 + \left(\frac{f^*_{vm}}{f^*_{va}}\right)} \leq V_u$$

where

V_u = the nominal shear capacity of a web with a uniform shear stress distribution determined in accordance with Clause 5.11.2

f^*_{vm}, f^*_{va} = the maximum and average design shear stresses in the web determined by a rational elastic analysis.

For a circular hollow section, V_v shall be taken as the nominal shear yield capacity (V_w) specified in Clause 5.11.4.

5.11.4 Shear yield capacity The nominal shear yield capacity (V_w) of a web shall be calculated as follows:

$$V_w = 0.6 f_y A_w$$

where A_w is the gross sectional area of the web.

The nominal shear yield capacity (V_w) of a circular hollow section shall be calculated as follows:

$$V_w = 0.36 f_y A_e$$

where the effective sectional area (A_e) shall be taken as the gross area of the circular hollow section provided either that there are no holes larger than those required for fasteners, or that the net area is greater than 0.9 times the gross area, or otherwise as the net area.

Accessed by SWINBURNE UNIVERSITY OF TECHNOLOGY on 15 Aug 2007

@Seismicisolation

@Seismicisolation

5.11.5 Shear buckling capacity

5.11.5.1 *Unstiffened web* The nominal shear buckling capacity (V_b) for an unstiffened web or a web considered to be unstiffened (see Clause 5.10.4) shall be calculated as follows:

$$V_b = \alpha_v V_w \leq V_w$$

where

$$\beta_v = \left[\frac{82}{\left(\frac{d_p}{t_w}\right)\sqrt{\left(\frac{f_y}{250}\right)}}\right]^2$$

5.11.5.2 *Stiffened web* The nominal shear buckling capacity (V_b) for a stiffened web with $s/d_p \leq 3.0$ shall be calculated as follows:

$$V_b = \alpha_v \alpha_d \alpha_f V_w \leq V_w$$

where

$$\beta_v = \left[\frac{82}{\left(\frac{d_p}{t_w}\right)\sqrt{\left(\frac{f_y}{250}\right)}}\right]^2 \left[\frac{0.75}{\left(\frac{s}{d_p}\right)^2} + 1.0\right] \leq 1.0 \qquad \text{when } 1.0 \leq s/d_p \leq 3.0$$

$$\beta_v = \left[\frac{82}{\left(\frac{d_p}{t_w}\right)\sqrt{\left(\frac{f_y}{250}\right)}}\right]^2 \left[\frac{1}{\left(\frac{s}{d_p}\right)^2} + 0.75\right] \leq 1.0 \qquad \text{when } s/d_p \leq 1.0, \text{ and}$$

$$\alpha_d = 1 + \frac{1 - \alpha_v}{1.15\alpha_v\sqrt{\left[1 + \left(\frac{s}{d_p}\right)^2\right]}}; \text{ or}$$

α_d = 1.0 when required by Clause 5.15.2.2, and

d_p = the depth of the deepest web panel.

Values of the product $\alpha_v\alpha_d$ are given in Table 5.11.5.2.

The flange restraint factor (α_f) shall be taken as either—

(a) $\alpha_f = 1.0$; or

(b) $\alpha_f = 1.6 - \dfrac{0.6}{\sqrt{\left[1 + \left(\dfrac{40 b_{fo} t_f^2}{d_1^2 t_w}\right)\right]}}$ for webs without longitudinal stiffeners, in which b_{fo} is the least of all of the following:

Accessed by SWINBURNE UNIVERSITY OF TECHNOLOGY on 15 Aug 2007

@Seismicisolation

@Seismicisolation

(i) $\dfrac{12t_f}{\sqrt{(f_y/250)}}$;

(ii) the distance from the mid-plane of the web to the nearer edge of the flange (taken as zero if there is no flange outstand);

(iii) half the clear distance between the webs if there are two or more webs; or

(c) shall be determined from a rational buckling analysis.

NOTE: Guidance on the shear buckling capacity of a web which contains an axial load is given in Appendix I.

TABLE 5.11.5.2

VALUES OF $\alpha_v\alpha_d$

$\left(\frac{d_p}{t_w}\right)\sqrt{\left(\frac{f_y}{250}\right)}$	$\frac{s}{d_p}$										
	0.3	**0.5**	**0.75**	**1.0**	**1.25**	**1.5**	**1.75**	**2.0**	**2.5**	**3.0**	**>3.0**
90	1.000	1.000	1.000	1.000	1.000	1.000	1.000	0.991	0.952	0.927	0.830
100	1.000	1.000	1.000	1.000	0.998	0.946	0.907	0.877	0.833	0.803	0.672
110	1.000	1.000	1.000	0.989	0.919	0.866	0.825	0.792	0.744	0.711	0.556
120	1.000	1.000	1.000	0.930	0.859	0.805	0.762	0.728	0.677	0.642	0.467
130	1.000	1.000	1.000	0.883	0.812	0.757	0.713	0.678	0.625	0.587	0.398
140	1.000	1.000	0.960	0.846	0.775	0.719	0.674	0.638	0.583	0.544	0.343
150	1.000	1.000	0.926	0.816	0.745	0.689	0.643	0.606	0.550	0.510	0.299
160	1.000	1.000	0.898	0.792	0.721	0.664	0.617	0.579	0.522	0.481	0.263
170	1.000	1.000	0.875	0.772	0.701	0.643	0.596	0.558	0.499	0.458	0.233
180	1.000	0.997	0.855	0.755	0.684	0.626	0.578	0.539	0.480	0.438	0.208
190	1.000	0.974	0.839	0.740	0.669	0.611	0.563	0.524	0.464	0.421	
200	1.000	0.955	0.825	0.728	0.657	0.598	0.550	0.511	0.450	0.407	
210	1.000	0.939	0.813	0.718							
220	1.000	0.924	0.803	0.709							
230	1.000	0.912	0.793	0.701							
240	1.000	0.901	0.785	0.694							
250	1.000	0.891	0.778	0.687							
260	1.000	0.883	0.772	0.682							
270	1.000	0.875	0.767	0.677							

5.12 INTERACTION OF SHEAR AND BENDING

5.12.1 General The nominal web shear capacity (V_{vm}) in the presence of bending moment shall be calculated using the provisions of either Clause 5.12.2 or 5.12.3.

Accessed by SWINBURNE UNIVERSITY OF TECHNOLOGY on 15 Aug 2007

@Seismicisolation

@Seismicisolation

5.12.2 Proportioning method When the bending moment is assumed to be resisted only by the flanges and the design bending moment (M^*) satisfies—

$$M^* \leq \phi M_f$$

where M_f is the nominal moment capacity calculated for the flanges alone and determined as follows:

$$M_f = A_{fm} d_f f_y$$

where

A_{fm} = the lesser of the flange effective areas, determined using Clause 6.2.2 for the compression flange and the lesser of A_{fg} and $0.85 A_{fn} f_u / f_y$ for the tension flange

A_{fg} = the gross area of the flange

A_{fn} = the net area of the flange

d_f = the distance between flange centroids,

the member shall satisfy—

$$V^* \leq \phi V_{vm}$$

where

$$V_{vm} = V_v$$

and V_v is the nominal web shear capacity determined either from Clause 5.11.2 or Clause 5.11.3.

5.12.3 Shear and bending interaction method When the bending moment is assumed to be resisted by the whole of the cross-section, the member shall be designed for combined bending and shear, and shall satisfy—

$$V^* \leq \phi V_{vm}$$

where

$$V_{vm} = V_v \qquad \text{for } M^* \leq 0.75\phi M_s\text{; or}$$

$$= V_v\left[2.2 - \left(\frac{1.6M^*}{\phi M_s}\right)\right] \qquad \text{for } 0.75\phi M_s \leq M^* \leq \phi M_s$$

where

V_v = the nominal shear capacity of a web in shear alone (see Clause 5.11.1)

M_s = the nominal section moment capacity determined in accordance with Clause 5.2

NOTE: Guidance on stiffened web panels required to resist bending moment, shear, axial and transverse loading is given in Appendix I.

5.13 COMPRESSIVE BEARING ACTION ON THE EDGE OF A WEB

5.13.1 Dispersion of force to web Where a force is applied to a flange either as a point load or through a stiff bearing of length (b_s), it shall be considered as dispersed uniformly through the flange at a slope of 1:2.5 to the surface of the flange, as shown in Figure 5.13.1.1, or to the top of the flat portion of the web for rectangular and square hollow sections to AS 1163, as shown in Figure 5.13.1.3. The stiff bearing length is that length which cannot deform appreciably in bending. The dispersion of load to the flange shall be taken at a slope of 1:1 through solid material, as shown in Figure 5.13.1.2.

5.13.2 Bearing capacity The design bearing force (R^*) on a web shall satisfy—

$$R^* \leq \phi R_b$$

where

ϕ = the capacity factor (see Table 3.4)

R_b = the nominal bearing capacity of the web under concentrated or patch loading, which shall be taken as the lesser of its nominal bearing yield capacity (R_{by}) defined in Clause 5.13.3, and its nominal bearing buckling capacity (R_{bb}) defined in Clause 5.13.4.

Accessed by SWINBURNE UNIVERSITY OF TECHNOLOGY on 15 Aug 2007

@Seismicisolation

@Seismicisolation

5.13.3 Bearing yield capacity The nominal bearing yield capacity (R_{by}) of a web shall be calculated as follows:

$$R_{by} = 1.25\, b_{bf}\, t_w\, f_y$$

where b_{bf} is the bearing width shown in Figure 5.13.1.1, except that for square and rectangular hollow sections to AS 1163, the nominal bearing yield capacity (R_{by}) of both webs shall be calculated as follows:

$$R_{by} = 2\, b_b\, t\, f_y\, \alpha_p$$

where

b_b = bearing width (see Figures 5.13.1.3(b) and (c))

α_p = coefficient used to calculate the nominal bearing yield capacity (R_{by}) for square and rectangular hollow sections to AS 1163.

The coefficient (α_p) shall be determined as follows:

(a) For interior bearing, where b_d is greater than or equal to $1.5d_5$—

$$\alpha_p = \frac{0.5}{k_s}\left[1 + \left(1 - \alpha_{pm}^2\right)\left(1 + \frac{k_s}{k_v} - \left(1 - \alpha_{pm}^2\right)\frac{0.25}{k_v^2}\right)\right]$$

where

b_d = distance from the stiff bearing to the end of the member (see Figure 5.13.1.3(b))

d_5 = flat width of web (see Figure 5.13.1.3(a))

α_{pm} = coefficient used to calculate α_p

$$= \frac{1}{k_s} + \frac{0.5}{k_v}$$

k_s = ratio used to calculate α_p and α_{pm}

$$= \frac{2r_{ext}}{t} - 1$$

k_v = ratio of flat width of web (d_5) to thickness (t) of section

$$= \frac{d_5}{t}$$

r_{ext} = outside radius of section (see Figure 5.13.1.3(a)).

The bearing width (b_b) shall be calculated as follows:

$$b_b = b_s + 5r_{ext} + d_5$$

(b) For end bearing, where b_d is less than $1.5d_5$—

$$\alpha_p = \sqrt{(2 + k_s^2)} - k_s$$

The bearing width (b_b) shall be calculated as follows:

$$b_b = b_s + 2.5r_{ext} + \frac{d_5}{2}$$

NOTE: Guidance on the nominal yield capaciity of a stiffened web in bearing in the presence of bending moment and axial load is given in Appendix I.

5.13.4 Bearing buckling capacity The nominal bearing buckling capcity (R_{bb}) of a web without transverse stiffeners shall be taken as the axial load capacity determined in accordance with Section 6 using α_b equals 0.5 and k_f equals 1.0 for a compression member of area $t_w b_b$ and slenderness ratio l_e/r equals $2.5d_1/t_w$ where b_b is the total bearing width obtained by dispersions at a slope of 1:1 from b_{bf} to the neutral axis, if available, as shown in Figure 5.13.1.1, except that for square and rectangular

Accessed by SWINBURNE UNIVERSITY OF TECHNOLOGY on 15 Aug 2007

@Seismicisolation

@Seismicisolation

hollow sections to AS 1163, the slenderness ratio l_e/r equals 3.5 d_5/t_w for interior bearing ($b_d \geq 1.5d_5$) and l_e/r equals 3.8 d_5/t_w for end bearing ($b_d < 1.5d_5$), and b_b is as shown in Figure 5.13.1.3.

NOTE: Guidance on the nominal bearing buckling capacity (R_{bb}) of a stiffened web with a bearing load between the stiffeners in the presence of bending moment and axial load is given in Appendix I.

5.13.5 Combined bending and bearing of rectangular and square hollow sections Rectangular and square hollow sections to AS 1163 subjected to combined bending and bearing force shall satisfy Clauses 5.2, 5.13.2, and either—

$$1.2\left(\frac{R^*}{\phi R_b}\right) + \left(\frac{M^*}{\phi M_s}\right) \leq 1.5 \qquad \text{for } \frac{b_s}{b} \geq 1.0 \text{ and } \frac{d_1}{t_w} \leq 30$$

or

$$0.8\left(\frac{R^*}{\phi R_b}\right) + \left(\frac{M^*}{\phi M_s}\right) \leq 1.0 \qquad \text{otherwise}$$

where

ϕ = capacity factor (see Table 3.4)

R_b = nominal bearing capacity of a web specified in Clause 5.13.2

M_s = nominal section moment capacity determined in accordance with Clause 5.2

b_s = stiff bearing length

b = total width of section

Accessed by SWINBURNE UNIVERSITY OF TECHNOLOGY on 15 Aug 2007

@Seismicisolation

@Seismicisolation

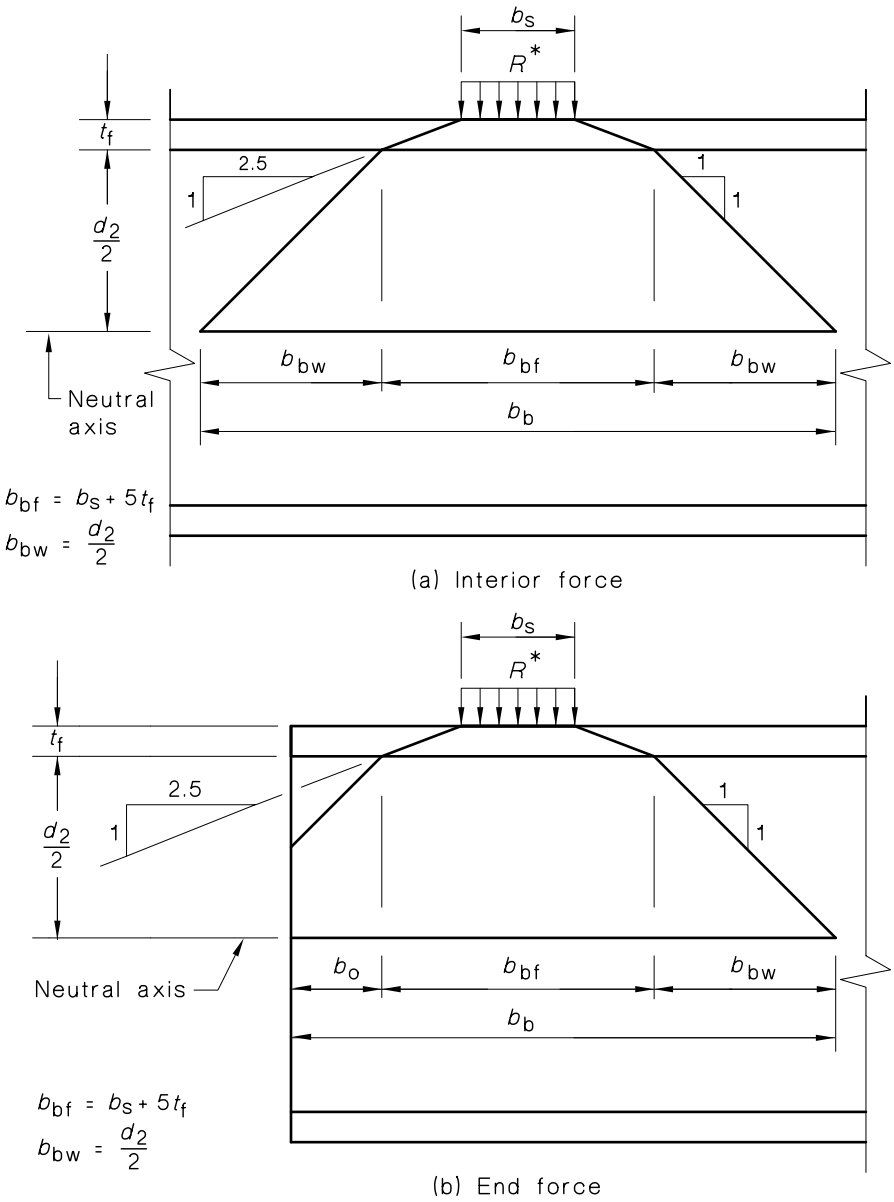

FIGURE 5.13.1.1 DISPERSIONS OF FORCE THROUGH FLANGE AND WEB

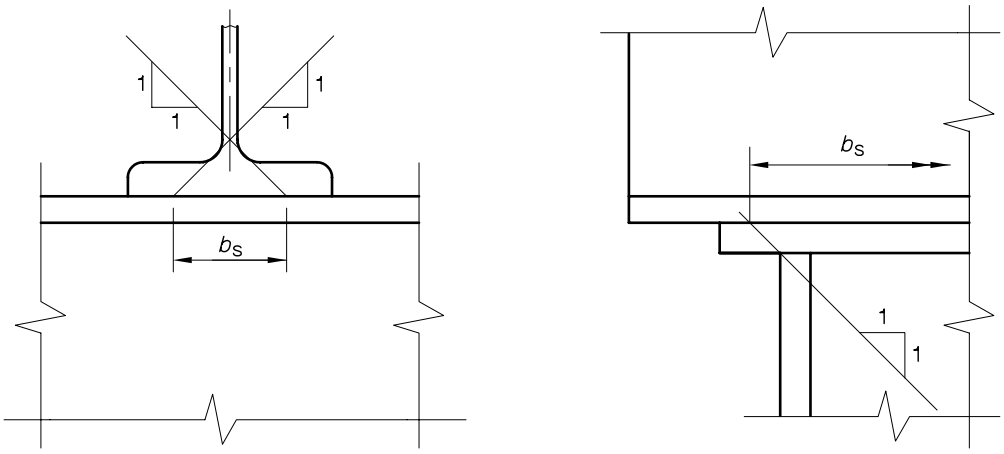

FIGURE 5.13.1.2 STIFF BEARING LENGTH ON FLANGE

Accessed by SWINBURNE UNIVERSITY OF TECHNOLOGY on 15 Aug 2007

@Seismicisolation

@Seismicisolation

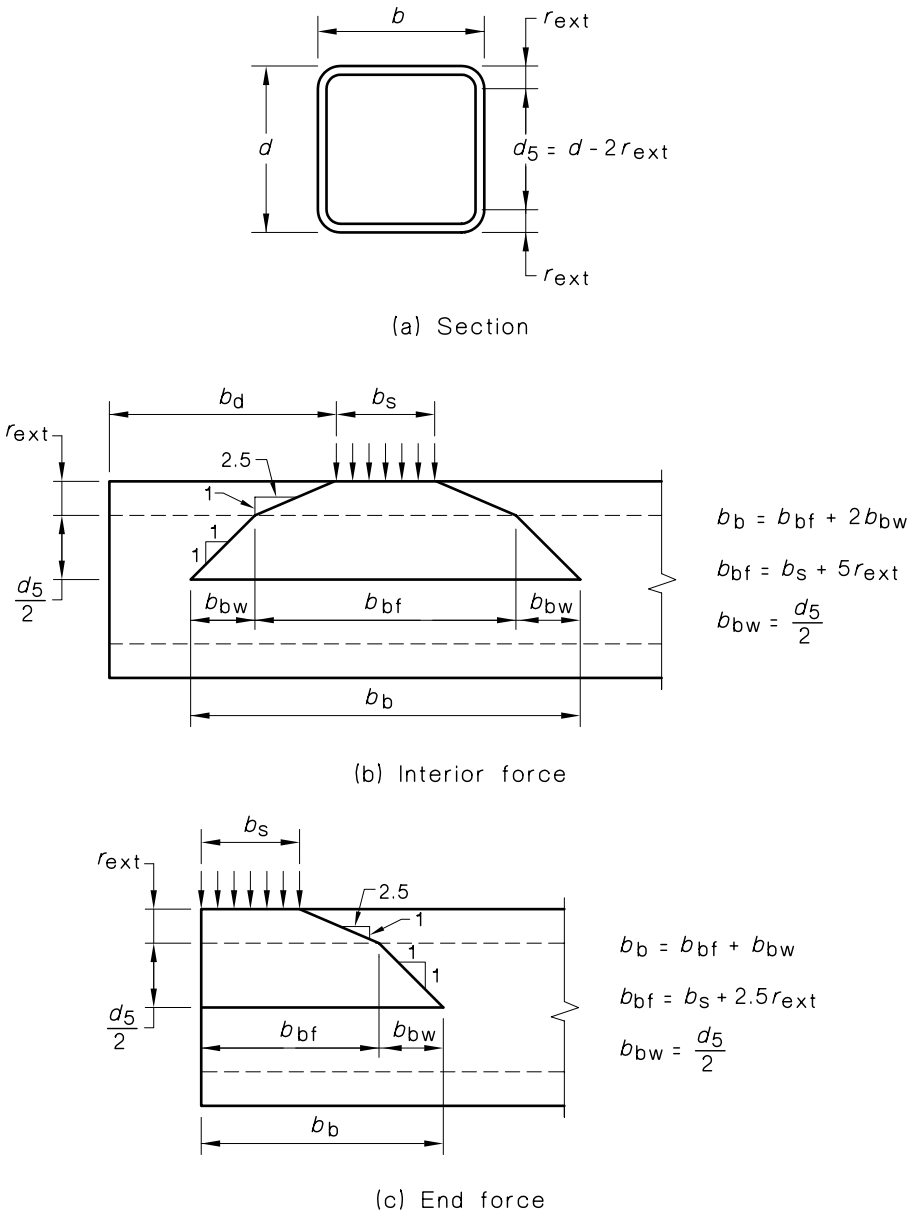

FIGURE 5.13.1.3 RECTANGULAR AND SQUARE HOLLOW SECTIONS—DISPERSION OF FORCE THROUGH FLANGE, RADIUS AND WEB

5.14 DESIGN OF LOAD BEARING STIFFENERS

5.14.1 Yield capacity When a load bearing stiffener is required, it shall satisfy—

$$R^* \leq \phi R_{sy}$$

where

R^* = the design bearing force or design reaction, including the effects of any shear forces applied directly to the stiffener

ϕ = the capacity factor (see Table 3.4)

R_{sy} = the nominal yield capacity of the stiffened web

= $R_{by} + A_s f_{ys}$

R_{by} = the nominal bearing yield capacity (see Clause 5.13.3)

Accessed by SWINBURNE UNIVERSITY OF TECHNOLOGY on 15 Aug 2007

@Seismicisolation

@Seismicisolation

A_s = the area of the stiffener in contact with the flange

f_{ys} = the yield stress of the stiffener.

5.14.2 Buckling capacity When a load bearing stiffener is required, it shall satisfy—

$$R^* \leq \phi R_{sb}$$

where

ϕ = the capacity factor (see Table 3.4)

R_{sb} = the nominal buckling capacity of the stiffened web, determined in accordance with Section 6 using α_b equals 0.5 and k_f equals 1.0 for a compression member whose radius of gyration is taken about the axis parallel to the web.

The effective section of the compression member shall be taken as the area of the stiffener, together with a length of web on each side of the centreline not greater than the lesser of—

$$\frac{17.5t_w}{\sqrt{\left(\frac{f_y}{250}\right)}} \text{ and } \frac{s}{2}, \text{ if available.}$$

The effective length (l_e) of the compression member used in calculating the buckling capacity (R_{sb}) shall be determined as either—

$$l_e = 0.7d_1$$

where the flanges are restrained by other structural elements against rotation in the plane of the stiffener, or—

$$l_e = d_1$$

if either of the flanges is not so restrained.

5.14.3 Outstand of stiffeners Unless the outer edge of a flat stiffener is continuously stiffened, the stiffener outstand from the face of a web (b_{es}) shall satisfy—

$$b_{es} \leq \frac{15t_s}{\sqrt{\left(\frac{f_{ys}}{250}\right)}}$$

where

t_s = the thickness of the stiffener

f_{ys} = the yield stress of the stiffener used in design.

5.14.4 Fitting of load bearing stiffeners A load bearing stiffener shall be fitted to provide a tight and uniform bearing against the loaded flange, unless welds are provided between the flange and stiffener for the purpose of transmitting the concentrated force or reaction. Where a point of concentrated force is directly over a support, this provision shall apply to both flanges.

Load bearing stiffeners shall be provided with sufficient welds or bolts to transmit their share of the design bearing force or design reaction (R^*) to the web.

Accessed by SWINBURNE UNIVERSITY OF TECHNOLOGY on 15 Aug 2007

@Seismicisolation

@Seismicisolation

5.14.5 Design for torsional end restraint When load bearing stiffeners are the sole means of providing torsional end restraint at the supports of a member, the second moment of area of a pair of stiffeners (I_s) about the centreline of the web shall be such that—

$$I_s \geq \left(\frac{\alpha_t}{1000}\right)\left(\frac{d^3 t_f R^*}{F^*}\right)$$

where

$\alpha_t = \dfrac{230}{(l_e/r_y)} - 0.60$ and $0 \leq \alpha_t \leq 4$

R^* = the design reaction at the bearing

F^* = the total design load on the member between supports

t_f = the thickness of the critical flange (see Clause 5.5)

(l_e/r_y) = the load bearing stiffener slenderness ratio used in Clause 5.14.2.

5.15 DESIGN OF INTERMEDIATE TRANSVERSE WEB STIFFENERS

5.15.1 General Intermediate transverse web stiffeners shall extend between each flange and shall terminate no further from a flange than four times the web thickness.

NOTE: Intermediate stiffeners may be provided on one or both sides of a web.

5.15.2 Spacing

5.15.2.1 *Interior panels* The spacing (s) of intermediate web stiffeners which define internal panels shall satisfy Clause 5.10.4 or Clause 5.10.5.

5.15.2.2 *End panels* An end panel shall be provided with an end post which satisfies Clause 5.15.9, unless the width (s) of the end panel is reduced so that its shear buckling capacity (V_b) calculated by using α_d equals 1.0 in Clause 5.11.5.2 satisfies Clauses 5.11.1 and 5.12.

5.15.3 Minimum area An intermediate web stiffener not subject to external loads or moments shall have an area A_s which satisfies—

$$A_s \geq 0.5\gamma A_w(1 - \alpha_v)\left(\frac{V^*}{\phi V_u}\right)\left[\left(\frac{s}{d_p}\right) - \frac{\left(\frac{s}{d_p}\right)^2}{\sqrt{\left[1 + \left(\frac{s}{d_p}\right)^2\right]}}\right]$$

where

α_v = the value determined in accordance with Clause 5.11.5.2

γ = 1.0 for a pair of stiffeners

= 1.8 for a single angle stiffener

= 2.4 for a single plate stiffener.

5.15.4 Buckling capacity An intermediate web stiffener shall satisfy—

$$V^* \leq \phi(R_{sb} + V_b)$$

where

ϕ = capacity factor (see Table 3.4)

Accessed by SWINBURNE UNIVERSITY OF TECHNOLOGY on 15 Aug 2007

@Seismicisolation

@Seismicisolation

V_b = nominal shear buckling capacity specified in Clause 5.11.5.2 for a stiffened web using α_d equals 1.0 and α_f equals 1.0

R_{sb} = nominal buckling capacity of the intermediate stiffener determined in accordance with Clause 5.14.2.

The effective length (l_e) of the compression member used in calculating R_{sb} shall be taken as—

$$l_e = d_1$$

5.15.5 Minimum stiffness An intermediate web stiffener not subject to external loads or moments shall have a minimum second moment of area (I_s) about the centreline of the web such that—

$$I_s \geq 0.75 d_1 t_w^3 \quad \text{for} \quad \frac{s}{d_1} \leq \sqrt{2}; \quad \text{and}$$

$$I_s \geq \frac{1.5 d_1^3 t_w^3}{s^2} \quad \text{for} \quad \frac{s}{d_1} > \sqrt{2}$$

5.15.6 Outstand of stiffeners The outstand (b_{es}) of an intermediate web stiffener shall satisfy Clause 5.14.3.

5.15.7 External forces

5.15.7.1 *Increase in stiffness* Where an intermediate stiffener is used to transfer design forces (F_n^*) normal to the web or design moments ($M^* + F_p^* e$) acting normal to the web (including moments $F_p^* e$ caused by any eccentric force F_p^* parallel to the web), the minimum value of I_s in Clause 5.15.5 shall be increased by—

$$\frac{d_1^4\{2F_n^* + [(M^* + F_p^* e)/d_1]\}}{\phi E d_1 t_w}$$

5.15.7.2 *Increase in strength* When an intermediate stiffener is required to carry a transverse load parallel to the web, it shall be designed as a load bearing stiffener in accordance with Clause 5.14.

5.15.8 Connection of intermediate stiffeners to web The web connections of intermediate transverse stiffeners not subject to external loading shall be designed to resist a design shear force per unit length, in kilonewtons per millimetre (kN/mm), of not less than—

$$\frac{0.0008(t_w)^2 f_y}{b_{es}}$$

where b_{es} is the outstand width of the stiffener from the face of the web, in millimetres, and t_w is the web thickness, in millimetres.

5.15.9 End posts When an end post is required by Clause 5.15.2.2, it shall be formed by a load bearing stiffener and a parallel end plate. The load bearing stiffener shall be designed in accordance with Clause 5.14, and shall be no smaller than the end plate. The area of the end plate (A_{ep}) shall satisfy—

$$A_{ep} \geq \frac{d_1[(V^*/\phi) - \alpha_v V_w]}{8 e f_y}$$

where

α_v is given in Clause 5.11.5.2

V_w is given in Clause 5.11.4

e = distance between the end plate and load bearing stiffener.

Accessed by SWINBURNE UNIVERSITY OF TECHNOLOGY on 15 Aug 2007

@Seismicisolation

@Seismicisolation

5.16 DESIGN OF LONGITUDINAL WEB STIFFENERS

5.16.1 General Longitudinal web stiffeners shall be continuous or shall extend between and be attached to transverse web stiffeners.

5.16.2 Minimum stiffness When a longitudinal stiffener is required at a distance $0.2d_2$ from the compression flange, it shall have a second moment of area (I_s) about the face of the web such that—

$$I_s \geq 4d_2t_w^3\left[1 + \frac{4A_s}{d_2t_w}\left(1 + \frac{A_s}{d_2t_w}\right)\right]$$

where A_s is the area of the stiffener.

When a second longitudinal stiffener is required at the neutral axis of the section, it shall have a second moment of area (I_s) about the face of the web such that—

$$I_s \geq d_2t_w^3$$

Accessed by SWINBURNE UNIVERSITY OF TECHNOLOGY on 15 Aug 2007

@Seismicisolation

@Seismicisolation

SECTION 6 MEMBERS SUBJECT TO AXIAL COMPRESSION

6.1 DESIGN FOR AXIAL COMPRESSION A concentrically loaded member subject to a design axial compression force (N^*) shall satisfy both—

$N^* \leq \phi N_s$, and

$N^* \leq \phi N_c$

where

ϕ = the capacity factor (see Table 3.4)

N_s = the nominal section capacity determined in accordance with Clause 6.2

N_c = the nominal member capacity determined in accordance with Clause 6.3.

6.2 NOMINAL SECTION CAPACITY

6.2.1 General The nominal section capacity (N_s) of a concentrically loaded compression member shall be calculated as follows:

$$N_s = k_f A_n f_y$$

where

k_f = the form factor given in Clause 6.2.2.

A_n = the net area of the cross-section, except that for sections with penetrations or unfilled holes that reduce the section area by less than $100\{1 - [f_y/(0.85 f_u)]\}$%, the gross area may be used. Deductions for fastener holes shall be made in accordance with Clause 9.1.10.

6.2.2 Form factor The form factor (k_f) shall be calculated as follows:

$$k_f = \frac{A_e}{A_g}$$

where

A_e = the effective area

A_g = the gross area of the section.

The effective area (A_e) shall be calculated from the gross area by summing the effective areas of the individual elements, whose effective widths are specified in Clause 6.2.4.

6.2.3 Plate element slenderness The slenderness (λ_e) of a flat plate element shall be calculated as follows:

$$\lambda_e = \frac{b}{t}\sqrt{\left(\frac{f_y}{250}\right)}$$

where

b = the clear width of the element outstand from the face of the supporting plate element, *or* the clear width of the element between the faces of the supporting plate elements.

t = the thickness of the plate.

For circular hollow sections, the element slenderness (λ_e) shall be calculated as follows:

$$\lambda_e = \left(\frac{d_o}{t}\right)\left(\frac{f_y}{250}\right)$$

where

d_o = the outside diameter of the section

t = the wall thickness of the section.

Accessed by SWINBURNE UNIVERSITY OF TECHNOLOGY on 15 Aug 2007

@Seismicisolation

@Seismicisolation

6.2.4 Effective width The effective width (b_e) of a flat plate element of clear width (b), or the effective outside diameter (d_e) of a circular hollow section of outside diameter (d_o), shall be calculated from the value of the element slenderness (λ_e) given in Clause 6.2.3 and the element yield slenderness limit (λ_{ey}) given in Table 6.2.4.

The effective width (b_e) for a flat plate element shall be calculated as follows:

$$b_e = b\left(\frac{\lambda_{ey}}{\lambda_e}\right) \leq b$$

The effective outside diameter (d_e) for a circular hollow section shall be the lesser of—

$$d_e = d_o\sqrt{\left(\frac{\lambda_{ey}}{\lambda_e}\right)} \leq d_o, \text{ and}$$

$$d_e = d_o\left(\frac{3\lambda_{ey}}{\lambda_e}\right)^2$$

Alternatively, the effective width (b_e) for a flat plate element may be obtained from the following:

$$b_e = b\left(\frac{\lambda_{ey}}{\lambda_e}\right)\sqrt{\left(\frac{k_b}{k_{bo}}\right)} \leq b$$

where k_b is the elastic buckling coefficient for the element.

For a flat plate element supported along both longitudinal edges—

$$k_{bo} = 4.0$$

and for a flat plate element supported along one longitudinal edge (outstand)—

$$k_{bo} = 0.425$$

The elastic buckling coefficient (k_b) for the flat plate element shall be determined from a rational elastic buckling analysis of the whole member as a flat plate assemblage.

TABLE 6.2.4

VALUES OF PLATE ELEMENT YIELD SLENDERNESS LIMIT

Plate element type	Longitudinal edges supported	Residual stresses (see Notes)	Yield slenderness limit, λ_{ey}
Flat	One (Outstand)	SR	16
		HR	16
		LW, CF	15
		HW	14
	Both	SR	45
		HR	45
		LW, CF	40
		HW	35
Circular hollow sections		SR	82
		HR, CF	82
		LW	82
		HW	82

NOTES:

1 SR—stress relieved
HR—hot-rolled or hot-finished
CF—cold-formed
LW—lightly welded longitudinally
HW—heavily welded longitudinally

2 Welded members whose compressive residual stresses are less than 40 MPa may be considered to be lightly welded.

Accessed by SWINBURNE UNIVERSITY OF TECHNOLOGY on 15 Aug 2007

@Seismicisolation

@Seismicisolation

6.3 NOMINAL MEMBER CAPACITY

6.3.1 Definitions For the purpose of this Clause, the definitions below apply.

Geometrical slenderness ratio—the geometrical slenderness ratio (l_e/r), taken as the effective length (l_e), specified in Clause 6.3.2, divided by the radius of gyration (r) computed for the gross section about the relevant axis.

Length—the actual length (l) of an axially loaded member, taken as the length centre-to-centre of intersections with supporting members, or the cantilevered length in the case of free-standing members.

6.3.2 Effective length The effective length (l_e) of a compression member shall be determined as follows:

$$l_e = k_e l$$

where k_e is the member effective length factor determined in accordance with Clause 4.6.3.

6.3.3 Nominal capacity of a member of constant cross-section The nominal member capacity (N_c) of a member of constant cross-section shall be determined as follows:

$$N_c = \alpha_c N_s \leq N_s$$

where

N_s = the nominal section capacity, determined in accordance with Clause 6.2

α_c = the member slenderness reduction factor

$$= \xi\left(1 - \sqrt{\left[1 - \left(\frac{90}{\xi\lambda}\right)^2\right]}\right)$$

$$\xi = \frac{\left(\frac{\lambda}{90}\right)^2 + 1 + \eta}{2\left(\frac{\lambda}{90}\right)^2}$$

$$\lambda = \lambda_n + \alpha_a\alpha_b$$

$$\eta = 0.00326(\lambda - 13.5) \geq 0$$

$$\lambda_n = \left(\frac{l_e}{r}\right)\sqrt{(k_f)}\sqrt{\left(\frac{f_y}{250}\right)}$$

$$\alpha_a = \frac{2100(\lambda_n - 13.5)}{\lambda_n^2 - 15.3\lambda_n + 2050}$$

α_b = the appropriate member section constant given in Table 6.3.3(1) or 6.3.3(2)

k_f = the form factor determined in accordance with Clause 6.2.2.

Alternatively, values of the member slenderness reduction factor (α_c) may be obtained directly from Table 6.3.3(3) using the value of the modified member slenderness (λ_n) and the appropriate member section constant (α_b) given in Table 6.3.3(1) or 6.3.3(2).

Accessed by SWINBURNE UNIVERSITY OF TECHNOLOGY on 15 Aug 2007

@Seismicisolation

@Seismicisolation

TABLE 6.3.3(1)

VALUES OF MEMBER SECTION CONSTANT (α_b) FOR k_f = 1.0

Compression member section constant, α_b	Section description
–1.0	— Hot-formed RHS and CHS — Cold-formed (stress relieved) RHS and CHS
–0.5	— Cold-formed (non-stress relieved) RHS and CHS
0	— Hot-rolled UB and UC sections (flange thickness up to 40 mm) — Welded H and I sections fabricated from flame-cut plates — Welded box sections
0.5	— Tees flame-cut from universal sections, and angles — Hot-rolled channels — Welded H and I sections fabricated from as-rolled plates (flange thickness up to 40 mm) — Other sections not listed in this Table
1.0	— Hot-rolled UB and UC sections (flange thickness over 40 mm) — Welded H and I sections fabricated from as-rolled plates (flange thickness over 40 mm)

TABLE 6.3.3(2)

VALUES OF MEMBER SECTION CONSTANT (α_b) FOR k_f < 1.0

Compression member section constant, α_b	Section description
–0.5	— Hot-formed RHS and CHS — Cold-formed RHS and CHS (stress relieved) — Cold-formed RHS and CHS (non-stress relieved)
0	— Hot-rolled UB and UC sections (flange thickness up to 40mm) — Welded box sections
0.5	— Welded H and I sections (flange thickness up to 40 mm)
1.0	— Other sections not listed in this Table

Accessed by SWINBURNE UNIVERSITY OF TECHNOLOGY on 15 Aug 2007

@Seismicisolation

@Seismicisolation

TABLE 6.3.3(3)

VALUES OF MEMBER SLENDERNESS REDUCTION FACTOR (α_c)

Modified member slenderness, λ_n	Compression member section constant, α_b				
	–1.0	–0.5	0	0.5	1.0
0	1.000	1.000	1.000	1.000	1.000
5	1.000	1.000	1.000	1.000	1.000
10	1.000	1.000	1.000	1.000	1.000
15	1.000	0.998	0.995	0.992	0.990
20	1.000	0.989	0.978	0.967	0.956
25	0.997	0.979	0.961	0.942	0.923
30	0.991	0.968	0.943	0.917	0.888
35	0.983	0.955	0.925	0.891	0.853
40	0.973	0.940	0.905	0.865	0.818
45	0.959	0.924	0.884	0.837	0.782
50	0.944	0.905	0.861	0.808	0.747
55	0.927	0.885	0.836	0.778	0.711
60	0.907	0.862	0.809	0.746	0.676
65	0.886	0.837	0.779	0.714	0.642
70	0.861	0.809	0.748	0.680	0.609
75	0.835	0.779	0.715	0.646	0.576
80	0.805	0.746	0.681	0.612	0.545
85	0.772	0.711	0.645	0.579	0.516
90	0.737	0.675	0.610	0.547	0.487
95	0.700	0.638	0.575	0.515	0.461
100	0.661	0.600	0.541	0.485	0.435
105	0.622	0.564	0.508	0.457	0.412
110	0.584	0.528	0.477	0.431	0.389
115	0.546	0.495	0.448	0.406	0.368
120	0.510	0.463	0.421	0.383	0.348
125	0.476	0.434	0.395	0.361	0.330
130	0.445	0.406	0.372	0.341	0.313
135	0.416	0.381	0.350	0.322	0.297
140	0.389	0.357	0.330	0.304	0.282
145	0.364	0.336	0.311	0.288	0.268
150	0.341	0.316	0.293	0.273	0.255
155	0.320	0.298	0.277	0.259	0.242
160	0.301	0.281	0.263	0.246	0.231
165	0.283	0.265	0.249	0.234	0.220
170	0.267	0.251	0.236	0.222	0.210
175	0.252	0.238	0.224	0.212	0.200

(continued)

Accessed by SWINBURNE UNIVERSITY OF TECHNOLOGY on 15 Aug 2007

@Seismicisolation

@Seismicisolation

TABLE 6.3.3(3) *(continued)*

Modified member slenderness, λ_n	Compression member section constant, α_b				
	–1.0	–0.5	0	0.5	1.0
180	0.239	0.225	0.213	0.202	0.192
185	0.226	0.214	0.203	0.193	0.183
190	0.214	0.203	0.193	0.184	0.175
195	0.204	0.194	0.185	0.176	0.168
200	0.194	0.185	0.176	0.168	0.161
205	0.184	0.176	0.168	1.161	0.154
210	0.176	0.168	0.161	0.154	0.148
215	0.167	0.161	0.154	0.148	0.142
220	0.160	0.154	0.148	0.142	0.137
225	0.153	0.147	0.142	0.137	0.132
230	0.146	0.141	0.136	0.131	0.127
235	0.140	0.135	0.131	0.126	0.122
240	0.134	0.130	0.126	0.122	0.118
245	0.129	0.125	0.121	0.117	0.114
250	0.124	0.120	0.116	0.113	0.110
255	0.119	0.116	0.112	0.109	0.106
260	0.115	0.111	0.108	0.105	0.102
265	0.110	0.107	0.104	0.102	0.099
270	0.106	0.103	0.101	0.098	0.096
275	0.102	0.100	0.097	0.095	0.092
280	0.099	0.096	0.094	0.092	0.089
285	0.095	0.093	0.091	0.089	0.087
290	0.092	0.090	0.088	0.086	0.084
295	0.089	0.087	0.085	0.083	0.081
300	0.086	0.084	0.082	0.081	0.079
305	0.083	0.082	0.080	0.078	0.077
310	0.081	0.079	0.077	0.076	0.074
315	0.078	0.077	0.075	0.074	0.072
320	0.076	0.074	0.073	0.071	0.070
340	0.067	0.066	0.065	0.064	0.063
370	0.057	0.056	0.055	0.054	0.054
400	0.049	0.048	0.047	0.047	0.046
450	0.039	0.038	0.038	0.037	0.037
500	0.031	0.031	0.031	0.031	0.030
550	0.026	0.026	0.026	0.025	0.025
600	0.022	0.022	0.022	0.021	0.021

Accessed by SWINBURNE UNIVERSITY OF TECHNOLOGY on 15 Aug 2007

@Seismicisolation

@Seismicisolation

6.3.4 Nominal capacity of a member of varying cross-section The nominal member capacity (N_c) of a member of varying cross-section shall be determined using the provisions of Clause 6.3.3 provided that the following are satisfied—

(a) the nominal section capacity (N_s) is the minimum value for all cross-sections along the length of the member; and

(b) the modified member slenderness (λ_n) given in Clause 6.3.3 is replaced by the following:

$$\lambda_n = 90\sqrt{\left(\frac{N_s}{N_{om}}\right)}$$

where N_{om} is the elastic flexural buckling load of the member in axial compression determined using a rational elastic buckling analysis.

6.4 LACED AND BATTENED COMPRESSION MEMBERS

6.4.1 Design forces If a compression member composed of two or more main components which are parallel is intended to act as a single member, the main components and their connections shall be proportioned to resist a design transverse shear force (V^*) applied at any point along the length of the member in the most unfavourable direction. The design transverse shear force (V^*) shall be calculated as follows:

$$V^* = \frac{\pi\left(\frac{N_s}{N_c} - 1\right)N^*}{\lambda_n} \geq 0.01N^*$$

where

N_s = the nominal section capacity of the compression member given by Clause 6.2.1

N_c = the nominal member capacity of the compression member given by Clause 6.3.3

N^* = the design axial force applied to the compression member

λ_n = the modified member slenderness.

The modified member slenderness (λ_n) of a battened compression member shall be determined using Clauses 6.4.3.2 and 6.3.3.

6.4.2 Laced compression members

6.4.2.1 *Slenderness ratio of a main component* The maximum slenderness ratio $(l_e/r)_c$ of a main component, based on its minimum radius of gyration and the length between consecutive points where lacing is attached, shall not exceed the lesser of 50 or 0.6 times the slenderness ratio of the member as a whole.

6.4.2.2 *Slenderness ratio of a laced compression member* The slenderness ratio of a laced compression member shall be calculated by assuming that the main components act as an integral member but shall not be taken as less than $1.4(l_e/r)_c$.

6.4.2.3 *Lacing angle* The angle of inclination of the lacing to the longitudinal axis of the member shall be within the following limits:

(a) 50° to 70° for single lacing.

(b) 40° to 50° for double lacing.

6.4.2.4 *Effective length of a lacing element* The effective length of a lacing element shall be taken as the distance between the inner welds or fasteners for single lacing, and 0.7 times this distance for double lacing which is connected by welds or fasteners.

6.4.2.5 *Slenderness ratio limit of a lacing element* The slenderness ratio of a lacing element shall not exceed 140.

Accessed by SWINBURNE UNIVERSITY OF TECHNOLOGY on 15 Aug 2007

@Seismicisolation

@Seismicisolation

6.4.2.6 *Mutually opposed lacing* Single lacing systems mutually opposed in direction on opposite sides of two main components shall not be used unless allowance is made for the resulting torsional effects.

Double lacing systems and single lacing systems mutually opposed in direction on opposite sides of two main components shall not be combined with members or diaphragms perpendicular to the longitudinal axis of the compression member, except for tie plates as specified in Clause 6.4.2.7, unless all actions resulting from the deformation of the compression member are calculated and allowed for in design.

6.4.2.7 *Tie plates* Tie plates shall be provided at the ends of the lacing system, at points where the lacing system is interrupted, and at connections with other members. End tie plates shall have a width measured along the axis of the member of not less than the perpendicular distance between the centroids of their connections to the main components. Intermediate tie plates shall have a width of not less than three-quarters of this distance.

A tie plate and its connections shall be treated as battens for design purposes (see Clause 6.4.3). The thickness of a tie plate shall not be less than 0.02 times the distance between the innermost lines of welds or fastenings, except where the tie plate is effectively stiffened at the free edges. In the latter case, the edge stiffeners shall have a slenderness ratio less than 170.

6.4.3 Battened compression member

6.4.3.1 *Slenderness ratio of a main component* The maximum slenderness ratio $(l_e/r)_c$ of a main component, based on its minimum radius of gyration and the length between consecutive points where battens are attached, shall not exceed the lesser of 50, or 0.6 times the slenderness ratio of the member as a whole determined using Clause 6.4.3.2.

6.4.3.2 *Slenderness ratios of battened compression member* The slenderness ratio $(l_e/r)_{bn}$ of a battened compression member about the axis normal to the plane of the battens shall be calculated as follows:

$$\left(\frac{l_e}{r}\right)_{bn} = \sqrt{\left[\left(\frac{l_e}{r}\right)_m^2 + \left(\frac{l_e}{r}\right)_c^2\right]}$$

where

$\left(\frac{l_e}{r}\right)_m$ = the slenderness ratio of the whole member about the above axis calculated by assuming that the main components act as an integral member

$\left(\frac{l_e}{r}\right)_c$ = the maximum slenderness ratio of the main component, determined in accordance with Clause 6.4.3.1.

The slenderness ratio $(l_e/r)_{bp}$ of a battened compression member about the axis parallel to the plane of the battens shall be taken as not less than $1.4(l_e/r)_c$.

6.4.3.3 *Effective length of a batten* The effective length of an end batten shall be taken as the perpendicular distance between the centroids of the main components. The effective length of an intermediate batten shall be taken as 0.7 times the perpendicular distance between the centroids of the main components.

6.4.3.4 *Maximum slenderness ratio of a batten* The slenderness ratio of a batten shall not exceed 180.

6.4.3.5 *Width of a batten* The width of an end batten shall be not less than the greater of the distance between the centroids of the main components and twice the width of the narrower main component.

The width of an intermediate batten shall be not less than the greater of half the distance between the main components and twice the width of the narrower main component.

Accessed by SWINBURNE UNIVERSITY OF TECHNOLOGY on 15 Aug 2007

@Seismicisolation

@Seismicisolation

6.4.3.6 *Thickness of a batten* The thickness of a batten shall be not less than 0.02 times the minimum distance between the innermost lines of welds or fasteners, except where the batten is effectively stiffened at the free edges. In this case, the edge stiffeners shall have a slenderness ratio of not greater than 170, where the radius of gyration is taken about the axis parallel to the member axis.

6.4.3.7 *Loads on battens* The batten and its connections shall be designed to transmit simultaneously to the main components a design longitudinal shear force (V_l^*) calculated as follows:

$$V_l^* = \frac{V^* s_b}{n_b d_b}$$

and a design bending moment (M^*) calculated as follows:

$$M^* = \frac{V^* s_b}{2 n_b}$$

where

V^* = the design transverse shear force specified in Clause 6.4.1

s_b = the longitudinal centre-to-centre distance between the battens

n_b = the number of parallel planes of battens

d_b = the lateral distance between the centroids of the welds or fasteners.

6.5 COMPRESSION MEMBERS BACK TO BACK

6.5.1 Components separated

6.5.1.1 *Application* This Clause applies to compression members composed of two angle, channel or tee-section components discontinuously separated back to back by a distance not exceeding that required for the end gusset connection. If such a member is designed as a single integral member, then it shall comply with Clauses 6.5.1.2 to 6.5.1.5.

6.5.1.2 *Configuration* The configuration of the main components shall be of similar sections arranged symmetrically with their corresponding rectangular axes aligned.

6.5.1.3 *Slenderness* The slenderness of the compression member about the axis parallel to the connected surfaces shall be calculated in accordance with Clause 6.4.3.2.

6.5.1.4 *Connection* The main components shall be interconnected by fasteners. Where the components are connected together, the member shall be designed as a battened compression member in accordance with Clause 6.4.3. The main components shall be connected at intervals so that the member is divided into at least three bays of approximately equal length. At the ends of the member, the main components shall be connected by not less than two fasteners in each line along the length of the member, or by equivalent welds.

6.5.1.5 *Design forces* The interconnecting fasteners shall be designed to transmit a design longitudinal shear force between the components induced by the transverse shear force (V^*) given in Clause 6.4.1. The design longitudinal shear force (V_l^*) per connection shall be taken as follows:

$$V_l^* = 0.25 V^* \left(\frac{l_e}{r}\right)_c$$

where $(l_e/r)_c$ is the slenderness ratio of the main component between the interconnections.

6.5.2 Components in contact

6.5.2.1 *Application* This Clause applies to compression members composed of two angle, channel or tee-section components back-to-back or separated by continuous steel packing. If such a member is designed as a single integral member, then it shall comply with Clauses 6.5.2.2 to 6.5.2.5.

Accessed by SWINBURNE UNIVERSITY OF TECHNOLOGY on 15 Aug 2007

@Seismicisolation

@Seismicisolation

6.5.2.2 *Configuration* The main components shall be of similar sections arranged symmetrically with their corresponding rectangular axes aligned.

6.5.2.3 *Slenderness* The slenderness of the compression member about the axis parallel to the connected surfaces shall be calculated in accordance with Clause 6.4.3.2.

6.5.2.4 *Connection* The main components shall be connected at intervals so that the member is divided into at least three bays of approximately equal length. At the ends of the member, the main components shall be interconnected by not less than two fasteners in each line along the length of the member, or by equivalent welds.

6.5.2.5 *Design forces* The interconnecting fasteners or welds shall be designed to transmit a longitudinal shear force between the components induced by the transverse shear force (V^*) in accordance with Clause 6.4.1. The design longitudinal shear force (V_l^*) per connection shall be as specified in Clause 6.5.1.5.

6.6 RESTRAINTS

6.6.1 Restraint systems The members and the connections of restraining systems required to brace compression members and reduce their effective lengths shall be determined by analysing the structure for its design loads, including any notional horizontal forces (see Clause 3.2.4), from the points where the forces arise to anchorage or reaction points, and by designing the members and connections as specified in Clauses 6.6.2 and 6.6.3.

6.6.2 Restraining members and connections At each restrained cross-section of a compression member, the restraining members and their connections which are required to brace the compression member shall be designed for the greater of—

(a) the restraining member forces specified in Clause 6.6.1; and

(b) 0.025 times the maximum axial compression force in the member at the position of the restraint,

except where the restraints are more closely spaced than is required to ensure that—

$$N^* = \phi N_c$$

When the restraint spacing is less, then a lesser force may be designed for. The actual arrangement of restraints shall be assumed to be equivalent to a set of restraints which will ensure that N^* equals ϕN_c. Each equivalent restraint shall correspond to an appropriate group of the actual restraints. This group shall then be designed as a whole to transfer the transverse force determined for the position of the equivalent restraint.

6.6.3 Parallel braced compression members When a series of parallel compression members is restrained by a line of restraints, each restraining element shall be designed to transfer the transverse force specified in Clause 6.6.2, except that 0.025 times the axial compression force shall be replaced by the sum of 0.025 times the axial force in the connected compression member and 0.0125 times the sum of the axial forces in the connected compression members beyond, with no more than seven members considered in the summation.

Accessed by SWINBURNE UNIVERSITY OF TECHNOLOGY on 15 Aug 2007

@Seismicisolation

@Seismicisolation

SECTION 7 MEMBERS SUBJECT TO AXIAL TENSION

7.1 DESIGN FOR AXIAL TENSION A member subject to a design axial tension force (N^*) shall satisfy—

$$N^* \leq \phi N_t$$

where

ϕ = the capacity factor, see Table 3.4

N_t = the nominal section capacity in tension determined in accordance with Clause 7.2.

7.2 NOMINAL SECTION CAPACITY The nominal section capacity of a tension member shall be taken as the lesser of—

$N_t = A_g f_y$; and

$N_t = 0.85 k_t A_n f_u$

where

A_g = the gross area of the cross-section

f_y = the yield stress used in design

k_t = the correction factor for distribution of forces determined in accordance with Clause 7.3

A_n = the net area of the cross-section, obtained by deducting from the gross area the sectional area of all penetrations and holes, including fastener holes. The deduction for all fastener holes shall be made in accordance with Clause 9.1.10. For threaded rods, the net area shall be taken as the tensile stress area of the threaded portion, as defined in AS 1275.

f_u = the tensile strength used in design.

7.3 DISTRIBUTION OF FORCES

7.3.1 End connections providing uniform force distribution Where for design purposes it is assumed that the tensile force is distributed uniformly to a tension member, the end connections shall satisfy both the following:

(a) The connections shall be made to each part of the member and shall be symmetrically placed about the centroidal axis of the member.

(b) Each part of the connection shall be proportioned to transmit at least the maximum design force carried by the connected part of the member.

For connections satisfying these requirements, the value of k_t shall be taken as 1.0.

7.3.2 End connections providing non-uniform force distribution If the end connections of a tension member do not satisfy the requirements of Clause 7.3.1, then the member shall be designed to comply with Section 8 using k_t equals 1.0, except that Clause 7.2 may be used for the following members:

(a) *Eccentrically-connected angles, channels and tees* Eccentrically-connected angles, channels and tees may be designed in accordance with Clause 7.2, using the appropriate value of k_t given in Table 7.3.2.

(b) *I-sections or channels connected by both flanges only* A symmetrical rolled or built-up member of solid I-section or channel section connected by both flanges only may be designed in accordance with Clause 7.2 using a value of k_t equal to 0.85, provided that—

(i) the length between the first and last rows of fasteners in the connection or, when the member is welded, the length of longitudinal weld provided to each side of the connected flanges shall be not less than the depth of the member; and

(ii) each flange connection shall be proportioned to transmit at least half of the maximum design force carried by the connected member.

Accessed by SWINBURNE UNIVERSITY OF TECHNOLOGY on 15 Aug 2007

@Seismicisolation

@Seismicisolation

7.4 TENSION MEMBERS WITH TWO OR MORE MAIN COMPONENTS

7.4.1 General A tension member composed of two or more main components intended to act as a single member shall comply with Clauses 7.4.2 to 7.4.5.

7.4.2 Design forces for connections If a tension member is composed of two or more main components, the connections between the components shall be proportioned to resist the internal actions arising from the external design forces and bending moments (if any). The design forces for lacing bars, and the design forces and bending moments (if any) for battens, shall be considered as divided equally among the connection planes parallel to the direction of force.

TABLE 7.3.2

CORRECTION FACTOR (k_t)

Configuration case		Correction factor, k_t
(i)	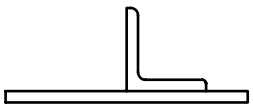	0.75 for unequal angles connected by the short leg 0.85 otherwise
(ii)	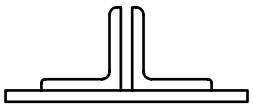	As for Case (i)
(iii)	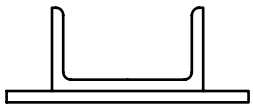	0.85
(iv)	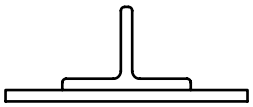	0.90
(v)	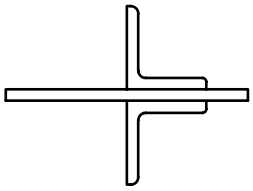	1.0
(vi)	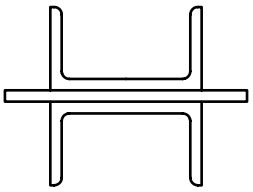	1.0
(vii)	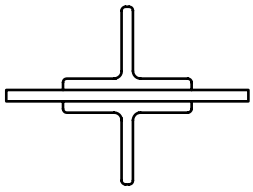	1.0

Accessed by SWINBURNE UNIVERSITY OF TECHNOLOGY on 15 Aug 2007

@Seismicisolation

@Seismicisolation

7.4.3 Tension member composed of two components back-to-back A tension member composed of two flats, angles, channels or tees, discontinuously connected back-to-back either in contact or separated by a distance not exceeding that required for the end gusset connection, shall comply with the following:

(a) *Where the components are separated* They shall be connected either—

(i) together at regular intervals along their length by welding, or bolting, so that the slenderness ratio of the individual components between connections does not exceed 300; or

(ii) by connections which comply with Clauses 6.5.1.4 and 6.5.1.5.

(b) *Where component members are in contact back-to-back* They shall be connected together as required by Clauses 6.5.2.4 and 6.5.2.5.

7.4.4 Laced tension member A tension member composed of two components connected by lacing shall comply with Clause 6.4.2 except as follows:

(a) The slenderness ratio of the lacing elements shall not exceed 210.

(b) The slenderness ratio of a main component based on its minimum radius of gyration and the length between consecutive points where lacing is attached shall not exceed 300.

For tie plates, the requirements of Clause 6.4.2.7 shall be satisfied except that the thickness of tie plates shall be not less than 0.017 times the distance between the innermost lines of connections.

7.4.5 Battened tension member A tension member composed of two components connected by battens shall comply with Clause 6.4.3 except as follows:

(a) The spacing of battens shall be such that the maximum slenderness ratio of each main component, based on its minimum radius of gyration and the length between consecutive battens, does not exceed 300.

(b) Battens attached by bolts shall be connected by not less than two bolts and Clause 6.4.3.7 shall not apply.

(c) Batten plates shall have a thickness of not less than 0.017 times the distance between the innermost lines of connections.

(d) Intermediate battens shall have a width of not less than half the effective width of end batten plates.

7.5 MEMBERS WITH PIN CONNECTIONS The nominal capacity of a pin connection shall be determined in accordance with Clause 9.5. A pin connection in a tension member shall comply with the following additional requirements:

(a) The thickness of an unstiffened element containing a hole for a pin connection shall be greater than or equal to 0.25 times the distance from the edge of the hole to the edge of the element measured at right angles to the axis of the member. This limit does not apply to the internal plies where the connected elements are clamped together by external nuts.

(b) The net area beyond a hole for a pin, parallel to or within 45° of the axis of the member, shall be greater than or equal to the net area required for the member.

(c) The sum of the areas at a hole for a pin, perpendicular to the axis of the member, shall be greater than or equal to 1.33 times the net area required for the member.

(d) Pin plates provided to increase the net area of a member or to increase the bearing capacity of a pin shall be arranged to avoid eccentricity and shall be proportioned to distribute the load from the pin into the member.

Accessed by SWINBURNE UNIVERSITY OF TECHNOLOGY on 15 Aug 2007

@Seismicisolation

@Seismicisolation

SECTION 8 MEMBERS SUBJECT TO COMBINED ACTIONS

8.1 GENERAL A member subject to combined axial and bending actions shall be proportioned so that its design actions specified in Clause 8.2, in combination with the nominal section and member capacities (see Sections 5, 6 and 7), satisfy Clauses 8.3 and 8.4. For plastic design (see Clause 4.5), only the requirements of Clause 8.4.3 need to be satisfied.

Eccentrically loaded double-bolted or welded angles in trusses shall be proportioned to satisfy Clause 8.3, and either Clause 8.4.5 or Clause 8.4.6.

8.2 DESIGN ACTIONS For checking the section capacity at a section, the design axial force (N^*), which may be tension or compression, shall be the force at the section, and the design bending moments (M_x^*, M_y^*) shall be the bending moments at the section about the major *x*- and minor *y*-principal axes, respectively.

For checking the member capacity, the design axial force (N^*) shall be the maximum axial force in the member, and the design bending moments (M_x^*, M_y^*) shall be the maximum bending moments in the member.

M_x^*, M_y^* are the design bending moments resulting from frame action and transverse loading on the member, and include the second order design bending moments resulting from the design loads acting on the structure and its members in their displaced and deformed configuration.

The design bending moments (M_x^*, M_y^*) shall be determined from one of the following methods of analysis:

(a) *First-order linear elastic analysis*—by modifying the first-order design bending moments, by using the appropriate moment amplification factors determined in accordance with Clause 4.4.2.

(b) *Second-order elastic analysis*—in which the design bending moments (M^*) are obtained either directly, or by modifying the second-order end moments by using the moment amplification factors determined in accordance with Appendix E.

(c) *First-order plastic analysis*—in which the design bending moments (M^*) are obtained directly for frames where the elastic buckling load factor (λ_c) satisfies $\lambda_c \geq 5$ and the requirements of Clause 4.5.4 are satisfied.

(d) *Second-order plastic analysis*—in which the design bending moments (M^*) are obtained directly for frames where the elastic buckling load factor (λ_c) satisfies $\lambda_c < 5$.

(e) *Advanced structural analysis*—in which the design bending moments (M_x^* or M_y^*) are obtained directly in accordance with Appendix D, in which case only the section capacity requirements of Clause 8.3 and the connection requirements of Section 9 need to be satisfied.

8.3 SECTION CAPACITY

8.3.1 General The member shall satisfy Clauses 8.3.2, 8.3.3 and 8.3.4, as appropriate:

(a) For bending about the major principal *x*-axis only, sections at all points along the member shall have sufficient capacity to satisfy Clause 8.3.2.

(b) For bending about the minor principal *y*-axis only, sections at all points along the member shall have sufficient capacity to satisfy Clause 8.3.3.

(c) For bending about a non-principal axis, or bending about both principal axes, sections at all points along the member shall have sufficient capacity to satisfy Clause 8.3.4.

Accessed by SWINBURNE UNIVERSITY OF TECHNOLOGY on 15 Aug 2007

@Seismicisolation

@Seismicisolation

In this Section—

M_{sx}, M_{sy} = the nominal section moment capacities about the x- and y-axes respectively, determined in accordance with Clause 5.2

N_s = the nominal section axial load capacity determined in accordance with Clause 6.2 for axial compression, or Clause 7.2 for axial tension (for which N_s equals N_t).

8.3.2 Uniaxial bending about the major principal *x*-axis Where uniaxial bending occurs about the major principal x-axis, the following shall be satisfied:

$$M_x^* \leq \phi M_{rx}$$

where

ϕ = the capacity factor (see Table 3.4)

M_{rx} = the nominal section moment capacity, reduced by axial force (tension or compression)

$$= M_{sx}\left(1 - \frac{N^*}{\phi N_s}\right)$$

Alternatively, for doubly symmetric I-sections and rectangular and square hollow sections to AS 1163, which are compact as defined in Clause 5.2.3, M_{rx} may be calcualted by one of the following as appropriate:

(a) For compression members where k_f is equal to 1.0 and for tension members—

$$M_{rx} = 1.18M_{sx}\left(1 - \frac{N^*}{\phi N_s}\right) \leq M_{sx}$$

(b) For compression members where k_f is less than 1.0—

$$M_{rx} = M_{sx}\left(1 - \frac{N^*}{\phi N_s}\right)\left[1 + 0.18\left(\frac{82 - \lambda_w}{82 - \lambda_{wy}}\right)\right] \leq M_{sx}$$

λ_w and λ_{wy} are the values of λ_e and λ_{ey} for the web (see Clause 6.2.3 and Table 6.2.4).

8.3.3 Uniaxial bending about the minor principal *y*-axis Where uniaxial bending occurs about the minor principal y-axis, the design bending moment (M_y^*) about the minor principal y-axis shall satisfy—

$$M_y^* \leq \phi M_{ry}$$

where

ϕ = the capacity factor (see Table 3.4)

M_{ry} = the nominal section moment capacity reduced by the axial tensile or compressive force

$$= M_{sy}\left[1 - \frac{N^*}{\phi N_s}\right]$$

Alternatively, M_{ry} may be calculated by one of the following as appropriate:

(a) For doubly symmetric I-sections which are compact, as defined in Clause 5.2.3—

$$M_{ry} = 1.19M_{sy}\left[1 - \left(\frac{N^*}{\phi N_s}\right)^2\right] \leq M_{sy}$$

(b) For rectangular or square hollow sections to AS 1163 which are compact as defined in Clause 5.2.3—

$$M_{ry} = 1.18M_{sy}\left[1 - \left(\frac{N^*}{\phi N_s}\right)\right] \leq M_{sy}$$

Accessed by SWINBURNE UNIVERSITY OF TECHNOLOGY on 15 Aug 2007

@Seismicisolation

@Seismicisolation

8.3.4 Biaxial bending Where biaxial bending occurs, the design tensile or compressive force (N^*) and the design bending moments (M_x^*) and (M_y^*) about the major principal x-axis and minor principal y-axis shall satisfy—

$$\frac{N^*}{\phi N_s} + \frac{M_x^*}{\phi M_{sx}} + \frac{M_y^*}{\phi M_{sy}} \leq 1$$

Alternatively, for doubly symmetric I-sections and rectangular and square hollow sections to AS 1163, which are compact as defined in Clause 5.2.3, sections at all points along the member shall satisfy—

$$\left(\frac{M_x^*}{\phi M_{rx}}\right)^{\gamma} + \left(\frac{M_y^*}{\phi M_{ry}}\right)^{\gamma} \leq 1$$

where M_{rx} and M_{ry} shall be calculated in accordance with Clauses 8.3.2 and 8.3.3 respectively, and

$$\gamma = 1.4 + \left(\frac{N^*}{\phi N_s}\right) \leq 2.0$$

8.4 MEMBER CAPACITY

8.4.1 General The member shall satisfy Clauses 8.4.2, 8.4.3 and 8.4.4, as appropriate:

(a) For a member bent about the major principal x-axis only and where there is sufficient restraint to prevent lateral buckling, or for a member bent about the minor principal y-axis only, the member shall satisfy the in-plane requirements of Clause 8.4.2 for a frame analyzed elastically, or Clause 8.4.3 for a frame analyzed plastically.

(b) For a member bent about the major principal x-axis only and with insufficient restraint to prevent lateral buckling, the member shall satisfy both the in-plane requirements of Clause 8.4.2 and the out-of-plane requirements of Clause 8.4.4.

(c) For a member bent about a non-principal axis, or bent about both principal axes, the member shall satisfy the biaxial bending requirements of Clause 8.4.5.

8.4.2 In-plane capacity—elastic analysis

8.4.2.1 *Application* This Clause applies to a member analyzed using an elastic method in accordance with Clause 4.4, or to a member in a statically determinate structure.

8.4.2.2 *Compression members* A member bent about a principal axis shall have sufficient in-plane capacity to satisfy the following:

$$M^* \leq \phi M_i$$

where

M^* = the design bending moment about the principal axis

ϕ = the capacity factor (see Table 3.4)

M_i = the nominal in-plane member moment capacity

$$= M_s\left(1 - \frac{N^*}{\phi N_c}\right)$$

M_s = the nominal section moment capacity determined in accordance with Clause 5.2 for bending about the same principal axis as the design bending moment

N^* = the design axial compressive force

N_c = the nominal member capacity in axial compression determined in accordance with Clause 6.3 for buckling about the same principal axis, with the effective length factor (k_e) taken as 1.0 for both braced and sway members, unless a lower value is calculated for braced members from Clause 4.6.3.2, 4.6.3.3 or Clause 4.6.3.5, provided Clause 6.1 is satisfied for N_c calculated using l_e determined in accordance with Clause 4.6.3.

Accessed by SWINBURNE UNIVERSITY OF TECHNOLOGY on 15 Aug 2007

@Seismicisolation

@Seismicisolation

Alternatively, for doubly symmetric I-sections and rectangular and square hollow sections to AS 1163, which are compact as defined in Clause 5.2.3, and where the form factor (k_f) determined in accordance with Clause 6.2.2 is unity, M_i may be calculated as follows:

$$M_i = M_s\left\{\left[1-\left(\frac{1+\beta_m}{2}\right)^3\right]\left(1-\frac{N^*}{\phi N_c}\right)+1.18\left(\frac{1+\beta_m}{2}\right)^3\sqrt{\left(1-\frac{N^*}{\phi N_c}\right)}\right\}$$

$\leq M_{rx}$ or M_{ry} as appropriate

where

β_m = the ratio of the smaller to the larger end bending moment, taken as positive when the member is bent in reverse curvature for members without transverse load, or

= the value determined in accordance with Clause 4.4.2.2 for members with transverse load

M_{rx} or M_{ry} = the nominal section moment capacity about the appropriate principal axis determined in accordance with Clause 8.3.

8.4.2.3 *Tension members* A member subject to a design axial tensile force (N^*) and a design bending moment (M^*) shall satisfy Clause 8.3.

8.4.3 In-plane capacity—plastic analysis

8.4.3.1 *Application* This Clause applies only to compact doubly symmetric I-section members. When the distribution of moments in a frame is determined using a plastic method of analysis in accordance with Clause 4.5, then the design axial compressive force (N^*) in any member of the frame which is assumed to contain a plastic hinge shall satisfy the member slenderness requirements of Clause 8.4.3.2, and the web slenderness requirements of Clause 8.4.3.3.

The design plastic moment capacity reduced by axial force (tension or compression) for compact doubly symmetric I-sections shall be as specified in Clause 8.4.3.4.

8.4.3.2 *Member slenderness* The design axial compressive force (N^*) in every member assumed to contain a plastic hinge shall satisfy the following:

$$\frac{N^*}{\phi N_s} \leq \left[\frac{0.60+0.40\beta_m}{\sqrt{(N_s/N_{ol})}}\right]^2 \qquad \text{when } \frac{N^*}{\phi N_s} \leq 0.15,$$

and

$$\frac{N^*}{\phi N_s} \leq \frac{1+\beta_m-\sqrt{(N_s/N_{ol})}}{1+\beta_m+\sqrt{(N_s/N_{ol})}} \qquad \text{when } \frac{N^*}{\phi N_s} > 0.15,$$

where

β_m = the ratio of the smaller to the larger end bending moment, taken as positive when the member is bent in reverse curvature

N_s = the nominal section capacity in axial compression determined in accordance with Clause 6.2

N_{ol} = $\dfrac{\pi^2 EI}{l^2}$

I = the second moment of area for the axis about which the design moment acts

l = the actual length of the member.

A member for which—

$$\frac{N^*}{\phi N_s} > 0.15, \text{ and}$$

$$\frac{N^*}{\phi N_s} > \frac{1+\beta_m-\sqrt{(N_s/N_{ol})}}{1+\beta_m+\sqrt{(N_s/N_{ol})}}$$

shall not contain plastic hinges, although it shall be permissible to design the member as an elastic member in a plastically analyzed structure to satisfy the requirements of Clause 8.4.2.

Accessed by SWINBURNE UNIVERSITY OF TECHNOLOGY on 15 Aug 2007

@Seismicisolation

@Seismicisolation

8.4.3.3 *Web slenderness* The design axial compressive force (N^*) in every member assumed to contain a plastic hinge shall satisfy the following:

(a) For webs where $45 \le \frac{d_1}{t}\sqrt{\left(\frac{f_y}{250}\right)} \le 82$—

$$\frac{N^*}{\phi N_s} \le 0.60 - \left[\frac{d_1}{t}\,\frac{\sqrt{(f_y/250)}}{137}\right]$$

(b) For webs where $25 < \frac{d_1}{t}\sqrt{\left(\frac{f_y}{250}\right)} < 45$—

$$\frac{N^*}{\phi N_s} \le 1.91 - \left[\frac{d_1}{t}\,\frac{\sqrt{(f_y/250)}}{27.4}\right] \le 1.0$$

(c) For webs where $0 \le \frac{d_1}{t}\sqrt{\left(\frac{f_y}{250}\right)} \le 25$—

$$\frac{N^*}{\phi N_s} \le 1.0$$

Members which have webs for which $(d_1/t)\sqrt{(f_y/250)}$ exceeds 82 shall not contain plastic hinges, although it shall be permissible to design such a member as an elastic member in a plastically analyzed structure to satisfy the requirements of Clause 8.4.2.

8.4.3.4 *Plastic moment capacity* The design plastic moment capacity (ϕM_{pr}) reduced for axial force (tension or compression) shall be calculated as follows:

(a) For members bent about the major principal x-axis—

$$\phi M_{prx} = 1.18\phi M_{sx}\left(1 - \frac{N^*}{\phi N_s}\right) \le \phi M_{sx}$$

(b) For members bent about the minor principal y-axis—

$$\phi M_{pry} = 1.19\phi M_{sy}\left[1 - \left(\frac{N^*}{\phi N_s}\right)^2\right] \le \phi M_{sy}$$

where M_{sx} and M_{sy} are the nominal section moment capacities determined in accordance with Clauses 5.2.1 and 5.2.3.

8.4.4 Out-of-plane capacity

8.4.4.1 *Compression members* A member subject to a design axial compressive force (N^*) and a design bending moment (M_x^*) about its major principal x-axis, and which may buckle laterally, shall satisfy Clause 8.4.2 and also the following:

$$M_x^* \le \phi M_{ox}$$

where

ϕ = the capacity factor (see Table 3.4)

M_{ox} = the nominal out-of-plane member moment capacity

$$= M_{bx}\left(1 - \frac{N^*}{\phi N_{cy}}\right)$$

Accessed by SWINBURNE UNIVERSITY OF TECHNOLOGY on 15 Aug 2007

@Seismicisolation

@Seismicisolation

M_{bx} = the nominal member moment capacity of the member without full lateral restraint and bent about the major principal x-axis, determined in accordance with Clause 5.6 using a moment modification factor (α_m) appropriate to the distribution of design bending moments along the member

N_{cy} = the nominal member capacity in axial compression, determined in accordance with Clause 6.3 for buckling about the minor principal y-axis.

Alternatively, for members without transverse loads which are of compact doubly symmetric I-section (see Clause 5.2.3), are fully or partially restrained at both ends, and have a form factor (k_f) of unity determined in accordance with Clause 6.2.2, M_{ox} may be calculated as follows:

$$M_{ox} = \alpha_{bc} M_{bxo} \sqrt{\left[\left(1 - \frac{N^*}{\phi N_{cy}}\right)\left(1 - \frac{N^*}{\phi N_{oz}}\right)\right]} \leq M_{rx}$$

where

$$\frac{1}{\alpha_{bc}} = \frac{1 - \beta_m}{2} + \left(\frac{1 + \beta_m}{2}\right)^3 \left(0.4 - 0.23 \frac{N^*}{\phi N_{cy}}\right)$$

M_{bxo} = the nominal member moment capacity without full lateral restraint and with a uniform distribution of design bending moment so that α_m is unity, determined in accordance with Clause 5.6

N_{cy} = the nominal member capacity in axial compression, determined in accordance with Clause 6.3 for buckling about the minor principal y-axis

β_m = the ratio of the smaller to the larger end bending moment, taken as positive when the member is bent in reverse curvature

N_{oz} = the nominal elastic torsional buckling capacity of the member, calculated as follows:

$$N_{oz} = \frac{GJ + (\pi^2 E I_w / l_z^2)}{(I_x + I_y)/A}$$

E, G = the elastic moduli

A, I_w, I_x, I_y, and J = the section constants

l_z = the distance between partial or full torsional restraints

NOTE: Values of E and G, and expressions for I_w and J are given in Appendix H.

8.4.4.2 *Tension members* A member subject to a design axial tensile force (N^*) and a design bending moment (M_x^*) about its major principal x-axis, and which may buckle laterally, shall satisfy the following:

$$M_x^* \leq \phi M_{ox}$$

where

ϕ = the capacity factor (see Table 3.4)

M_{ox} = the nominal out-of-plane member moment capacity

$$= M_{bx}\left(1 + \frac{N^*}{\phi_t}\right) \leq M_{rx}$$

M_{bx} = the nominal member moment capacity defined in Clause 8.4.4.1

N_t = the nominal section capacity in axial tension determined in accordance with Clause 7.2

M_{rx} = the nominal section moment capacity reduced by axial force determined in accordance with Clause 8.3.2.

Accessed by SWINBURNE UNIVERSITY OF TECHNOLOGY on 15 Aug 2007

@Seismicisolation

@Seismicisolation

8.4.5 Biaxial bending capacity

8.4.5.1 *Compression members* A member subject to a design axial compressive force (N^*) and design bending moments (M_x^*) and (M_y^*) about the major x- and minor y- principal axes respectively shall satisfy the following:

$$\left(\frac{M_x^*}{\phi M_{cx}}\right)^{1.4} + \left(\frac{M_y^*}{\phi M_{iy}}\right)^{1.4} \leq 1$$

where

ϕ = the capacity factor (see Table 3.4)

M_{cx} = the lesser of the nominal in-plane member moment capacity (M_{ix}) and the nominal out-of-plane member moment capacity (M_{ox}) for bending about the major principal x-axis, determined in accordance with Clauses 8.4.2 and 8.4.4 respectively

M_{iy} = the nominal in-plane member moment capacity, determined in accordance with Clause 8.4.2, for bending about the minor principal y-axis.

8.4.5.2 *Tension members* A member subject to a design axial tensile force (N^*) and design bending moments (M_x^*) and (M_y^*) about the major x- and minor y- principal axes respectively shall satisfy the following:

$$\left(\frac{M_x^*}{\phi M_{tx}}\right)^{1.4} + \left(\frac{M_y^*}{\phi M_{ry}}\right)^{1.4} \leq 1$$

where

ϕ = the capacity factor (see Table 3.4)

M_{tx} = the lesser of the nominal section moment capacity (M_{rx}) reduced by axial tension and the nominal out-of-plane member moment capacity (M_{ox}) determined in accordance with Clauses 8.3.2 and 8.4.4.2 respectively

M_{ry} = the nominal section moment capacity reduced by axial tension, determined in accordance with Clause 8.3.3.

8.4.6 Eccentrically loaded double bolted or welded single angles in trusses Single angle web compression members in trusses which are connected with at least two bolts or welded at their ends and loaded through one leg (see Figure 8.4.6) shall be designed to satisfy Clause 8.3 and either Clause 8.4.5 or the following:

$$\frac{N^*}{\phi N_{ch}} + \frac{M_h^*}{\phi M_{bx} \cos \alpha} \leq 1$$

where

N^* = the design axial compression force in the member

M_h^* = the design bending moment acting about the rectangular h-axis parallel to the loaded leg

ϕ = the capacity factor (see Table 3.4)

N_{ch} = the nominal member capacity in axial compression, determined in accordance with Clause 6.3, of a single angle compression member buckling with l_e equals l about the rectangular h-axis parallel to the loaded leg

M_{bx} = the nominal member moment capacity, determined in accordance with Clause 5.6, for an angle without full lateral support, bent about the major principal x-axis using a factor α_m appropriate to the distribution of design bending moment along the member

α = the angle between x- and h- axes.

Accessed by SWINBURNE UNIVERSITY OF TECHNOLOGY on 15 Aug 2007

@Seismicisolation

@Seismicisolation

For equal leg angles, where $l/t \leq (210 + 175ß_m)(250/f_y)$, M_{bx} may be taken as M_{sx},

where

M_{sx} = the nominal section moment capacity about the x-principal axis, determined in accordance with Clause 5.2.

l = the member length

t = the thickness of the angle.

For other equal leg angles, M_{bx} may be determined by using Clause 5.6.1.1 with—

$$M_o = \left(\frac{525t}{l}\right)\left(\frac{250}{f_y}\right)M_s$$

The design end bending moment (M_h^*) shall be calculated from a rational elastic analysis of the truss, or shall be taken as not less than N^*e, resulting from the out-of-plane eccentricity (e) of the design axial force (N^*) in the member,

where

$e = \left(c_h - \frac{t}{2}\right)$, for angles on the same side of the truss chord

$= (e_c + e_t)$, for angles on opposite sides of the truss chord.

(see Figure 8.4.6).

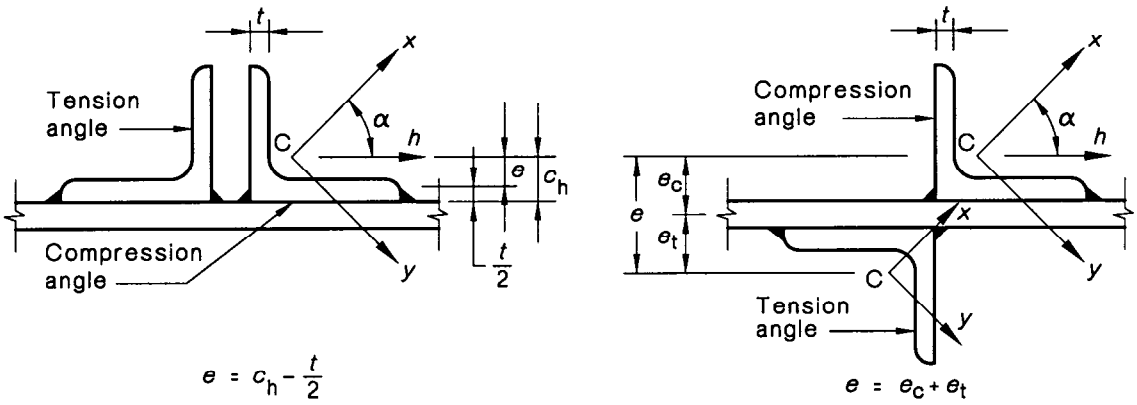

FIGURE 8.4.6 SINGLE ANGLES LOADED THROUGH ONE LEG

Accessed by SWINBURNE UNIVERSITY OF TECHNOLOGY on 15 Aug 2007

@Seismicisolation

@Seismicisolation

SECTION 9 CONNECTIONS

9.1 GENERAL

9.1.1 Requirements for connections Connection elements consist of connection components (cleats, gusset plates, brackets, connecting plates) and connectors (bolts, pins and welds). The connections in a structure shall be proportioned so as to be consistent with the assumptions made in the analysis of the structure and to comply with this Section. Connections shall be capable of transmitting the calculated design action effects.

9.1.2 Classification of connections

9.1.2.1 *Connections in rigid construction* The connections shall comply with Clause 4.2.2. The joint deformations shall be such that they have no significant influence on the distribution of action effects nor on the overall deformation of the frame.

9.1.2.2 *Connections in semi-rigid construction* The connections shall comply with Clause 4.2.3. Connections between members in semi-rigid construction shall provide a predictable degree of interaction between members, based on the actual action-deformation characteristics of the connection as determined experimentally.

9.1.2.3 *Connections in simple construction* The connections shall comply with Clause 4.2.4. Connections between members in simple construction shall be capable of deforming to provide the required rotation at the connection. The connections shall not develop a level of restraining bending moment which adversely affects any part of the structure. The rotation capacity of the connection shall be provided by the detailing of the connection and shall have been demonstrated experimentally. The connection shall be considered as subject to reaction shear forces acting at an eccentricity appropriate to the connection detailing.

9.1.2.4 *Connections in structures analyzed by the plastic method* Connections in structures analyzed by the plastic method shall comply with Clause 4.5.3, in addition to the requirements of this Section.

9.1.3 Design of connections Each element in a connection shall be designed so that the structure is capable of resisting all design actions. The design capacities of each element shall be not less than the calculated design action effects. For earthquake load combinations, the connection shall be designed for the calculated design action effects, exhibit the required ductility and shall comply with Section 13.

Connections and the adjacent areas of members shall be designed by distributing the design action effects so that they comply with the following requirements:

(a) The distributed design action effects are in equilibrium with the design action effects acting on the connection.

(b) The deformations in the connection are within the deformation capacities of the connection elements.

(c) All of the connection elements and the adjacent areas of members are capable of resisting the design action effects acting on them.

(d) The connection elements shall remain stable under the design action effects and deformations.

Design shall be on the basis of a recognized method supported by experimental evidence.

Residual actions due to the installation of bolts need not be considered.

Accessed by SWINBURNE UNIVERSITY OF TECHNOLOGY on 15 Aug 2007

@Seismicisolation

@Seismicisolation

9.1.4 Minimum design actions on connections Connections carrying design action effects, except for lacing connections and connections to sag rods, purlins and girts, shall be designed to transmit the greater of—

(a) the design action in the member; and

(b) the minimum design action effects expressed either as the value or the factor times the member design capacity for the minimum size of member required by the strength limit state, specified as follows:

(i) Connections in rigid construction—a bending moment of 0.5 times the member design moment capacity.

(ii) Connections to beam in simple construction—a shear force of 0.15 times the member design shear capacity or 40 kN, whichever is the lesser.

(iii) Connections at the ends of tensile or compression members—a force of 0.3 times the member design capacity, except that for threaded rod acting as a bracing member with turnbuckles, the minimum tensile force shall be equal to the member design capacity.

(iv) Splices in members subject to axial tension—a force of 0.3 times the member design capacity in tension.

(v) Splices in members subject to axial compression—for ends prepared for full contact in accordance with Clause 14.4.4.2, it shall be permissible to carry compressive actions by bearing on contact surfaces. When members are prepared for full contact to bear at splices, there shall be sufficient fasteners to hold all parts securely in place. The fasteners shall be sufficient to transmit a force of 0.15 times the member design capacity in axial compression.

In addition, splices located between points of effective lateral support shall be designed for the design axial force (N^*) plus a design bending moment not less than the design bending moment (M^*)

where

$$M^* = \frac{\delta N^* l_s}{1000}$$

δ = appropriate amplification factor δ_b or δ_s determined in accordance with Clause 4.4

l_s = distance between points of effective lateral support.

When members are not prepared for full contact, the splice material and its fasteners shall be arranged to hold all parts in line and shall be designed to transmit a force of 0.3 times the member design capacity in axial compression.

(vi) Splices in flexural members—a bending moment of 0.3 times the member design capacity in bending. This provision shall not apply to splices designed to transmit shear force only.

A splice subjected to a shear force only shall be designed to transmit the design shear force together with any bending moment resulting from the eccentricity of the force with respect to the centroid of the connector group.

(vii) Splices in members subject to combined actions—a splice in a member subject to a combination of design axial tension or design axial compression and design bending moment shall satisfy (iv), (v) and (vi) simultaneously.

For earthquake load combinations, the design action effects specified in this Clause may need to be increased to meet the required behaviour of the steel frame and shall comply with Section 13.

Accessed by SWINBURNE UNIVERSITY OF TECHNOLOGY on 15 Aug 2007

@Seismicisolation

@Seismicisolation

9.1.5 Intersections Members or components meeting at a joint shall be arranged to transfer the design actions between the parts and wherever practicable, with their centroidal axes meeting at a point. Where there is eccentricity at joints, the members and components shall be designed for the design bending moments which result.

The disposition of fillet welds to balance the design actions about the centroidal axis or axes for end connections of single angle, double angle and similar type members is not required for statically loaded members but is required for members and connection components subject to fatigue loading.

Eccentricity between the centroidal axes of angle members and the gauge lines for their bolted end connections may be neglected in statically loaded members, but shall be considered in members and connection components subject to fatigue loading.

9.1.6 Choice of fasteners Where slip in the serviceability limit state shall be avoided in a connection, high-strength bolts in a friction-type joint (bolting category 8.8/TF), fitted bolts or welds shall be used.

Where a joint is subject to impact or vibration, high-strength bolts in a friction-type joint (bolting category 8.8/TF), locking devices or welds shall be used.

9.1.7 Combined connections When non-slip fasteners (such as high-strength bolts in a friction-type connection or welds) are used in a connection in conjunction with slip-type fasteners (such as snug-tight bolts, or tensioned high-strength bolts in bearing-type connections), all of the design actions shall be assumed to be carried by the non-slip fasteners.

Where a mixture of non-slip fasteners is used, sharing of the design actions may be assumed. However, when welding is used in a connection in conjunction with other non-slip fasteners—

(a) any design actions initially applied directly to the welds shall not be assumed to be distributed to fasteners added after the application of the design actions; and

(b) any design actions applied after welding shall be assumed to be carried by the welds.

9.1.8 Prying forces Where bolts are required to carry a design tensile force, the bolts shall be proportioned to resist any additional tensile force due to prying action.

9.1.9 Connection components Connection components (cleats, gusset plates, brackets and the like) other than connectors shall have their capacities assessed using the provisions of Sections 5, 6, 7 and 8 as applicable.

9.1.10 Deductions for fastener holes

9.1.10.1 *Hole area* In calculating the deductions to be made for holes for fasteners (including countersunk holes), the gross areas of the holes in the plane of their axes shall be used.

9.1.10.2 *Holes not staggered* For holes that are not staggered, the area to be deducted shall be the maximum sum of the areas of the holes in any cross-sections at right angles to the direction of the design action in the member.

9.1.10.3 *Staggered holes* When holes are staggered, the area to be deducted shall be the greater of—

(a) the deduction for non-staggered holes; or

(b) the sum of the areas of all holes in any zig-zag line extending progressively across the member or part of the member, less $(s_p^2 t / 4s_g)$ for each gauge space in the chain of holes

where

s_p = staggered pitch, the distance measured parallel to the direction of the design action in the member, centre-to-centre of holes in consecutive lines, (see Figure 9.1.10.3(1))

t = thickness of the holed material

s_g = gauge, the distance, measured at right angles to the direction of the design action in the member, centre-to-centre of holes in consecutive lines, (see Figure 9.1.10.3(1)). For sections such as angles with holes in both legs, the gauge shall be taken as the sum of the back marks to each hole, less the leg thickness (see Figure 9.1.10.3(2)).

Accessed by SWINBURNE UNIVERSITY OF TECHNOLOGY on 15 Aug 2007

@Seismicisolation

@Seismicisolation

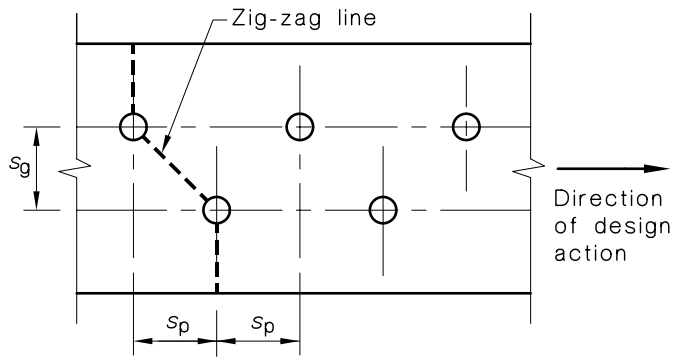

FIGURE 9.1.10.3.(1) STAGGERED HOLES

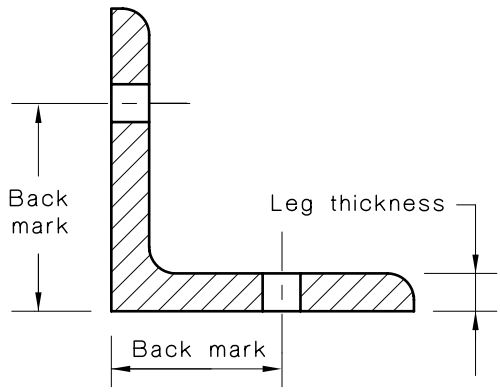

FIGURE 9.1.10.3(2) ANGLES WITH HOLES IN BOTH LEGS

9.1.11 Hollow section connections When design actions from one member are applied to a hollow section at a connection, consideration shall be given to the local effects on the hollow section.

9.2 DEFINITIONS For the purpose of this Section, the definitions below apply.

Bearing-type connection—connection effected using either snug-tight bolts, or high-strength bolts tightened to induce a specified minimum bolt tension, in which the design action is transferred by shear in the bolts and bearing on the connected parts at the strength limit state.

Friction-type connection—connection effected using high-strength bolts tightened to induce a specified minimum bolt tension so that the resultant clamping action transfers the design shear forces at the serviceability limit state acting in the plane of the common contact surfaces by the friction developed between the contact surfaces.

Full tensioning—a method of installing and tensioning a bolt in accordance with Clauses 15.2.4 and 15.2.5.

In-plane loading—loading for which the design forces and bending moments are in the plane of the connection, such that the design action effects induced in the connection components are shear forces only.

Non-slip fasteners—fasteners which do not allow slip to occur between connected plates or members at the serviceability limit state so that the original alignment and relative positions are maintained.

Out-of-plane loading—loading for which the design forces or bending moments result in design action effects normal to the plane of the connection.

Pin—an unthreaded fastener manufactured out of round bar.

Accessed by SWINBURNE UNIVERSITY OF TECHNOLOGY on 15 Aug 2007

@Seismicisolation

@Seismicisolation

Prying force—additional tensile force developed as a result of the flexing of a connection component in a connection subjected to tensile force. External tensile force reduces the contact pressure between the component and the base, and bending in part of the component develops a prying force near the edge of the connection component.

Snug tight—the tightness of a bolt achieved by a few impacts of an impact wrench or by the full effort of a person using a standard podger spanner.

9.3 DESIGN OF BOLTS

9.3.1 Bolts and bolting category The bolts and bolting categories listed in Table 9.3.1 shall be designed in accordance with this Clause and Clause 9.4.

Other property classes of bolts conforming to AS/NZS 1110, AS/NZS 1111 and AS/NZS 1559 may be designed in accordance with the provisions of this Clause and Clause 9.4.

TABLE 9.3.1

BOLTS AND BOLTNG CATEGORY

Bolting category	Bolt standard	Bolt grade	Method of tensioning	Minimum tensile strength (f_{uf}) (see Note 2) MPa
4.6/S	AS/NZS 1111	4.6	Snug tight	400
8.8/S	AS/NZS 1252	8.8	Snug tight	830
8.8/TB	AS/NZS 1252	8.8	Full tensioning	830
8.8/TF (See Note 1)	AS/NZS 1252	8.8	Full tensioning	830

NOTES:

1 Special category used in connections where slip in the serviceability limit state is to be restricted (see Clauses 3.5.5 and 9.1.6).

2 f_{uf} is the minimum tensile strength of the bolt as specified in the relevant Standard.

9.3.2 Bolt strength limit states

9.3.2.1 *Bolt in shear* A bolt subject to a design shear force (V_f^*) shall satisfy—

$$V_f^* \leq \phi V_f$$

where

ϕ = capacity factor (see Table 3.4)

V_f = nominal shear capacity of a bolt.

The nominal shear capacity of a bolt (V_f) shall be calculated as follows:

$$V_f = 0.62 f_{uf} k_r (n_n A_c + n_x A_o)$$

where

f_{uf} = minimum tensile strength of the bolt as specified in the relevant Standard (see Table 9.3.1)

k_r = reduction factor given in Table 9.3.2.1 to account for the length of a bolted lap connection (l_j). For all other connections, k_r equals 1.0

n_n = number of shear planes with threads intercepting the shear plane

A_c = minor diameter area of the bolt as defined in AS 1275

n_x = number of shear planes without threads intercepting the shear plane

A_o = nominal plain shank area of the bolt.

Accessed by SWINBURNE UNIVERSITY OF TECHNOLOGY on 15 Aug 2007

@Seismicisolation

@Seismicisolation

TABLE 9.3.2.1

REDUCTION FACTOR FOR A BOLTED LAP CONNECTION (k_r)

Length mm	$l_j < 300$	$300 \le l_j \le 1300$	$l_j > 1300$
k_r	1.0	$1.075 - (l_j/4000)$	0.75

9.3.2.2 *Bolt in tension* A bolt subject to a design tension force (N_{tf}^*) shall satisfy—

$$N_{tf}^* \le \phi N_{tf}$$

where

ϕ = capacity factor (see Table 3.4)

N_{tf} = nominal tensile capacity of a bolt.

The nominal tension capacity of a bolt (N_{tf}) shall be calculated as follows:

$$N_{tf} = A_s f_{uf}$$

where A_s is the tensile stress area of a bolt as specified in AS 1275.

9.3.2.3 *Bolt subject to combined shear and tension* A bolt required to resist both design shear (V_f^*) and design tensile forces (N_{tf}^*) at the same time shall satisfy—

$$\left(\frac{V_f^*}{\phi V_f}\right)^2 + \left(\frac{N_{tf}^*}{\phi N_{tf}}\right)^2 \le 1.0$$

where

ϕ = capacity factor (see Table 3.4)

V_f = nominal shear capacity calculated in accordance with Clause 9.3.2.1

N_{tf} = nominal tensile capacity calculated in accordance with Clause 9.3.2.2.

9.3.2.4 *Ply in bearing* A ply subject to a design bearing force (V_b^*) due to a bolt in shear shall satisfy—

$$V_b^* \le \phi V_b$$

where

ϕ = capacity factor (see Table 3.4)

V_b = nominal bearing capacity of a ply.

The nominal bearing capacity of a ply (V_b) shall be calculated as follows:

$$V_b = 3.2 d_f t_p f_{up} \qquad \ldots 9.3.2.4(1)$$

provided that, for a ply subject to a component of force acting towards an edge, the nominal bearing capacity of a ply (V_b) shall be the lesser of that given by Equation 9.3.2.4(1) and that given by Equation 9.3.2.4(2)—

$$V_b = a_e t_p f_{up} \qquad \ldots 9.3.2.4(2)$$

where

d_f = diameter of the bolt

t_p = thickness of the ply

f_{up} = tensile strength of the ply

a_e = minimum distance from the edge of a hole to the edge of a ply, measured in the direction of the component of a force, plus half the bolt diameter. The edge of a ply shall be deemed to include the edge of an adjacent bolt hole.

Accessed by SWINBURNE UNIVERSITY OF TECHNOLOGY on 15 Aug 2007

@Seismicisolation

@Seismicisolation

9.3.2.5 *Filler plates* For connections in which filler plates exceed 6 mm in thickness but are less than 20 mm in thickness, the nominal shear capacity of a bolt (V_f) specified in Clause 9.3.2.1 shall be reduced by 15%. For multi-shear plane connections with more than one filler plate through which a bolt passes, the reduction shall be determined using the maximum thickness of filler plate on any shear plane through which the bolt passes.

9.3.3 Bolt serviceability limit state

9.3.3.1 *Design* For friction-type connections (bolting category 8.8/TF) in which slip in the serviceability limit state is required to be limited, a bolt subjected only to a design shear force (V^*_{sf}) in the plane of the interfaces shall satisfy—

$$V^*_{sf} \leq \phi V_{sf}$$

where

ϕ = capacity factor (see Clause 3.5.5)

V_{sf} = nominal shear capacity of a bolt, for a friction-type connection.

The nominal shear capacity of a bolt (V_{sf}) shall be calculated as follows:

$$V_{sf} = \mu n_{ei} N_{ti} k_h \qquad \ldots 9.3.3.1$$

where

μ = slip factor as specified in Clause 9.3.3.2

n_{ei} = number of effective interfaces

N_{ti} = minimum bolt tension at installation as specified in Clause 15.2.5.1.

k_h = factor for different hole types, as specified in Clause 14.3.5.2.

= 1.0 for standard holes

= 0.85 for short slotted and oversize holes

= 0.70 for long slotted holes.

The strength limit state shall be separately assessed in accordance with Clause 9.3.2.

9.3.3.2 *Contact surfaces* Where the surfaces in contact are clean 'as-rolled' surfaces, the slip factor (λ) shall be taken as 0.35. If any applied finish, or other surface condition including a machined surface, is used, the slip factor shall be based upon test evidence. Tests performed in accordance with the procedure specified in Appendix J shall be deemed to provide satisfactory test evidence.

A connection involving 8.8/TF bolting category shall be identified as such, and the drawings shall clearly indicate the surface treatment required at such a connection and whether masking of the connection surfaces is required during painting operations (see Clause 14.3.6.3).

9.3.3.3 *Combined shear and tension* Bolts in a connection for which slip in the serviceability limit state shall be limited, which are subject to a design tension force (N^*_{tf}), shall satisfy—

$$\left(\frac{V^*_{sf}}{\phi V_{sf}}\right) + \left(\frac{N^*_{tf}}{\phi N_{tf}}\right) \leq 1.0$$

where

V^*_{sf} = design shear force on the bolt in the plane of the interfaces

N^*_{tf} = design tensile force on the bolt

ϕ = capacity factor (see Clause 3.5.5)

V_{sf} = nominal shear capacity of the bolt as specified in Clause 9.3.3.1

N_{tf} = nominal tensile capacity of the bolt.

The nominal tensile capacity of the bolt (N_{tf}) shall be taken as—

$$N_{tf} = N_{ti}$$

where N_{ti} is the minimum bolt tension at installation as specified in Clause 15.2.5.1.

The strength limit state shall also be separately assessed in accordance with Clause 9.3.2.3.

Accessed by SWINBURNE UNIVERSITY OF TECHNOLOGY on 15 Aug 2007

@Seismicisolation

@Seismicisolation

9.4 ASSESSMENT OF THE STRENGTH OF A BOLT GROUP

9.4.1 Bolt group subject to in-plane loading The design actions in a bolt group shall be determined by an analysis based on the following assumptions:

(a) The connection plates shall be considered to be rigid and to rotate relative to each other about a point known as the instantaneous centre of the bolt group.

(b) In the case of a bolt group subject to a pure couple only, the instantaneous centre of rotation coincides with the bolt group centroid.

In the case of a bolt group subject to an in-plane shear force applied at the group centroid, the instantaneous centre of rotation is at infinity and the design shear force is uniformly distributed throughout the group.

In all other cases, either the results of independent analyses for a pure couple alone and for an in-plane shear force applied at the bolt group centroid shall be superposed, or a recognized method of analysis shall be used.

(c) The design shear force in each bolt shall be assumed to act at right angles to the radius from the bolt to the instantaneous centre, and shall be taken as proportional to that radius.

Each bolt shall satisfy the requirements of Clause 9.3.2.1 using the capacity factor (ϕ) for a bolt group (see Table 3.4) and the ply in bearing shall satisfy Clause 9.3.2.4.

9.4.2 Bolt group subject to out-of-plane loading The design actions in any bolt in a bolt group subject to out-of-plane loading shall be determined in accordance with Clause 9.1.3.

Each bolt shall comply with Clauses 9.3.2.1, 9.3.2.2 and 9.3.2.3 using the capacity factor (ϕ) for a bolt group (see Table 3.4), and the ply in bearing shall comply with Clause 9.3.2.4.

9.4.3 Bolt group subject to combinations of in-plane and out-of-plane loadings The design actions in any bolt in a bolt group shall be determined in accordance with Clauses 9.4.1 and 9.4.2.

Each bolt shall comply with Clauses 9.3.2.1, 9.3.2.2 and 9.3.2.3 using the capacity factor (ϕ) for a bolt group (see Table 3.4), and the ply in bearing shall comply with Clause 9.3.2.4.

9.5 DESIGN OF A PIN CONNECTION

9.5.1 Pin in shear A pin subject to a design shear force (V_f^*) shall satisfy—

$$V_f^* \leq \phi V_f$$

where

ϕ = capacity factor (see Table 3.4)

V_f = nominal shear capacity of the pin.

The nominal shear capacity of a pin (V_f) shall be calculated as follows:

$$V_f = 0.62 f_{yp} n_s A_p$$

where

f_{yp} = yield stress of the pin

n_s = number of shear planes

A_p = cross-sectional area of the pin

9.5.2 Pin in bearing A pin subject to a design bearing force (V_b^*) shall satisfy—

$$V_b^* \leq \phi V_b$$

where

ϕ = capacity factor (see Table 3.4)

V_b = nominal bearing capacity of the pin.

Accessed by SWINBURNE UNIVERSITY OF TECHNOLOGY on 15 Aug 2007

@Seismicisolation

@Seismicisolation

The nominal bearing capacity of a pin (V_b) shall be calculated as follows:

$$V_b = 1.4 f_{yp} d_f t_p k_p$$

where

f_{yp} = yield stress of the pin

d_f = pin diameter

t_p = connecting plate thickness(es)

k_p = 1.0 for pins without rotation, or

= 0.5 for pins with rotation.

9.5.3 Pin in bending A pin subject to a design bending moment (M^*) shall satisfy—

$$M^* \leq \phi M_p$$

where

ϕ = capacity factor (see Table 3.4)

M_p = nominal moment capacity of the pin.

The nominal moment capacity of a pin (M_p) shall be calculated as follows:

$$M_p = f_{yp} S$$

where

f_{yp} = yield stress of the pin

S = plastic section modulus of the pin.

9.5.4 Ply in bearing A ply subject to a design bearing force (V_b^*) due to a pin in shear shall satisfy Clause 9.3.2.4.

9.6 DESIGN DETAILS FOR BOLTS AND PINS

9.6.1 Minimum pitch The distance between centres of fastener holes shall be not less than 2.5 times the nominal diameter of the fastener (d_f).

NOTE: The minimum pitch may also be affected by Clause 9.3.2.4.

9.6.2 Minimum edge distance The minimum edge distance shall be as follows:

(a) *Standard holes* The minimum edge distance for a standard size bolt hole (see Clause 14.3.5.2) shall be as given in Table 9.6.2, where the edge distance is measured from the centre of a hole to the edge of a plate or rolled section.

(b) *Non-standard holes* The minimum edge distance for a non-standard size bolt hole shall be as given in Table 9.6.2, where the edge distance is measured from the nearer edge of a hole to the physical edge of a plate or rolled section, plus half the fastener diameter (d_f).

TABLE 9.6.2

MINIMUM EDGE DISTANCE

Sheared or hand flame cut edge	Rolled plate, flat bar or section: machine flame cut, sawn or planed edge	Rolled edge of a rolled flat bar or section
$1.75d_f$	$1.50d_f$	$1.25d_f$

NOTE: The edge distance may also be affected by Clause 9.3.2.4.

Accessed by SWINBURNE UNIVERSITY OF TECHNOLOGY on 15 Aug 2007

@Seismicisolation

@Seismicisolation

9.6.3 Maximum pitch The maximum distance between centres of fasteners shall be the lesser of $15t_p$ (where t_p = thickness of thinner ply connected) or 200 mm. However, in the following cases, the maximum distances shall be as follows:

(a) For fasteners which are not required to carry design actions in regions not liable to corrosion—the lesser of $32t_p$ or 300 mm.

(b) For an outside line of fasteners in the direction of the design action—the lesser of $(4t_p + 100)$ mm, or 200 mm.

9.6.4 Maximum edge distance The maximum distance from the centre of any fastener to the nearest edge of parts in contact with one another shall be 12 times the thickness of the thinnest outer connected ply under consideration, but shall not exceed 150 mm.

9.6.5 Holes Holes for bolts shall comply with Clause 14.3.5 and holes for pins shall comply with Clause 14.3.7.

9.7 DESIGN OF WELDS

9.7.1 Scope

9.7.1.1 *General* Welding shall comply with AS/NZS 1554.1, AS 1554.2 or AS/NZS 1554.5, as appropriate.

9.7.1.2 *Weld types* For the purpose of this Standard, welds shall be butt, fillet, slot or plug welds, or compound welds.

9.7.1.3 *Weld quality* Weld quality shall be either SP or GP as specified in AS/NZS 1554.1, except that where a higher quality weld is required by Clause 11.1.5, weld quality conforming with AS/NZS 1554.5 shall be used. Weld quality shall be specified on the design drawings.

9.7.2 Complete and incomplete penetration butt welds

9.7.2.1 *Definitions* For the purpose of this Clause, the definitions below apply.

Complete penetration butt weld—a butt weld in which fusion exists between the weld and parent metal throughout the complete depth of the joint.

Incomplete penetration butt weld—a butt weld in which fusion exists over less than the complete depth of the joint.

Prequalified weld preparation—a joint preparation prequalified in terms of AS/NZS 1554.1.

9.7.2.2 *Size of weld* The size of a complete penetration butt weld, other than a complete penetration butt weld in a T-joint or a corner joint, and the size of an incomplete penetration butt weld shall be the minimum depth to which the weld extends from its face into a joint, exclusive of reinforcement.

The size of a complete penetration butt weld for a T-joint or a corner joint shall be the thickness of the part whose end or edge butts against the face of the other part.

9.7.2.3 *Design throat thickness* Design throat thickness shall be as follows:

(a) *Complete penetration butt weld* The design throat thickness for a complete penetration butt weld shall be the size of the weld.

(b) *Incomplete penetration butt weld* The design throat thickness for an incomplete penetration butt weld shall be as follows:

(i) Prequalified preparation for incomplete penetration butt weld except as otherwise provided in (iii), as specified in AS/NZS 1554.1.

Accessed by SWINBURNE UNIVERSITY OF TECHNOLOGY on 15 Aug 2007

@Seismicisolation

@Seismicisolation

(ii) Non-prequalified preparation for incomplete penetration butt weld except as provided in (iii)—

(A) where $\theta < 60°$ . . . . $(d - 3)$ mm, for single V weld;
$[(d_3 + d_4) - 6]$ mm, for double V weld.

(B) where $\theta > 60°$ . . . . d mm, for single V weld;
$(d_3 + d_4)$ mm, for double V weld.

where

d = depth of preparation (d_3 and d_4 are the values of d for each side of the weld)

θ = angle of preparation.

(iii) For an incomplete penetration butt weld made by an automatic arc welding process for which it can be demonstrated by means of a macro test on a production weld that the required penetration has been achieved, an increase in design throat thickness up to the depth of preparation may be allowed. If the macro test shows penetration beyond the depth of preparation, an increase in design throat thickness up to that shown in Figure 9.7.3.4 may be allowed.

NOTE: It is only necessary to specify the design throat thickness required, leaving the fabricator to determine the welding procedure necessary to achieve the specified design throat thickness.

9.7.2.4 *Effective length* The effective length of a butt weld shall be the length of the continuous full size weld.

9.7.2.5 *Effective area* The effective area of a butt weld shall be the product of the effective length and the design throat thickness.

9.7.2.6 *Transition of thickness or width* Butt welded joints between parts of different thickness or unequal width that are subject to tension shall have a smooth transition between surfaces or edges. The transition shall be made by chamfering the thicker part or by sloping the weld surfaces or by any combination of those, as shown in Figure 9.7.2.6.

The transition slope between the parts shall not exceed 1:1. However, the provisions of Section 11 require a lesser slope than this or a curved transition between the parts for some fatigue detail categories.

Accessed by SWINBURNE UNIVERSITY OF TECHNOLOGY on 15 Aug 2007

@Seismicisolation

@Seismicisolation

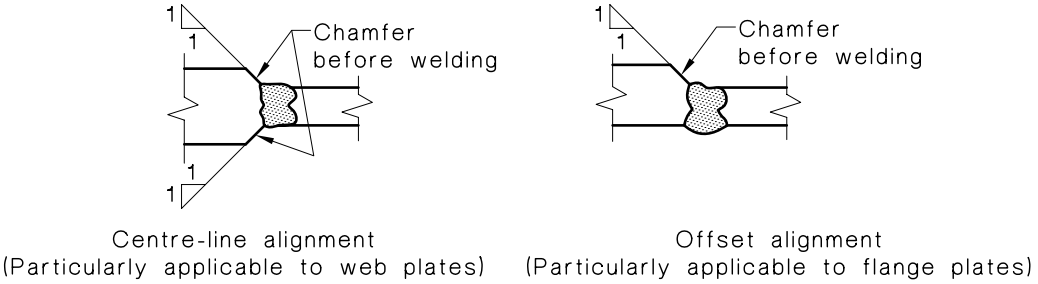

(i) Transition by chamfering thicker part

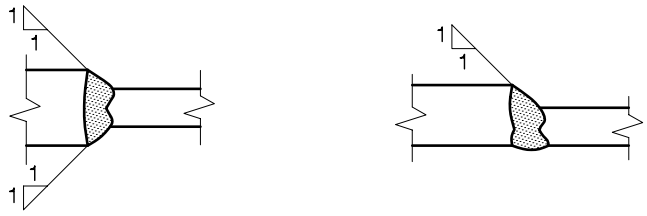

(ii) Transition by sloping weld surface

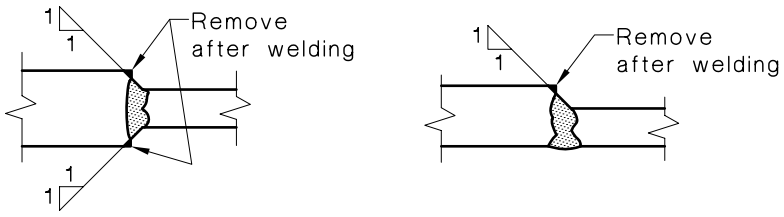

(iii) Transition by sloping weld surface and chamfering

(a) Transition of butt joints in parts of unequal thickness

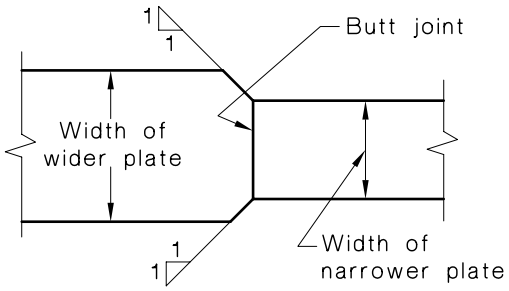

(b) Transition of butt joints in parts of unequal width—Transition by chamfering wider part

NOTE: Transition slopes shown in (a) and (b) are the maximum permitted.

FIGURE 9.7.2.6 TRANSITIONS OF THICKNESS OR WIDTH FOR BUTT WELDS SUBJECT TO TENSION

Accessed by SWINBURNE UNIVERSITY OF TECHNOLOGY on 15 Aug 2007

@Seismicisolation

@Seismicisolation

9.7.2.7 *Strength assessment of a butt weld* The assessment of a butt weld for the strength limit state shall be as follows:

(a) *Complete penetration butt weld* The design capacity of a complete penetration butt weld shall be taken as equal to the nominal capacity of the weaker part of the parts joined, multiplied by the appropriate capacity factor (ϕ) for butt welds given in Table 3.4, provided that the welding procedures are qualified in accordance with AS/NZS 1554.1 or AS/NZS 1554.5. The butt weld shall be made using a welding consumable which will produce butt tensile test specimens in accordance with AS 2205.2.1 for which the minimum strength is not less than that given in Table 2.1 for the parent material.

(b) *Incomplete-penetration butt weld* The design capacity of an incomplete-penetration butt weld shall be calculated as for a fillet weld (see Clause 9.7.3.10) using the design throat thickness determined in accordance with Clause 9.7.2.3(b).

9.7.3 Fillet welds

9.7.3.1 *Size of a fillet weld* The size of a fillet weld shall be specified by the leg lengths. The leg lengths shall be defined as the lengths (t_{w1}, t_{w2}) of the sides lying along the legs of a triangle inscribed within the cross-section of the weld (see Figures 9.7.3.1(a) and (b)). When the legs are of equal length, the size shall be specified by a single dimension (t_w).

Where there is a root gap, the size (t_w) shall be given by the lengths of the legs of the inscribed triangle reduced by the root gap as shown in Figure 9.7.3.1(c).

NOTE: The preferred sizes of a fillet weld less than 15 mm are—3, 4, 5, 6, 8, 10 and 12 mm.

Accessed by SWINBURNE UNIVERSITY OF TECHNOLOGY on 15 Aug 2007

@Seismicisolation

@Seismicisolation

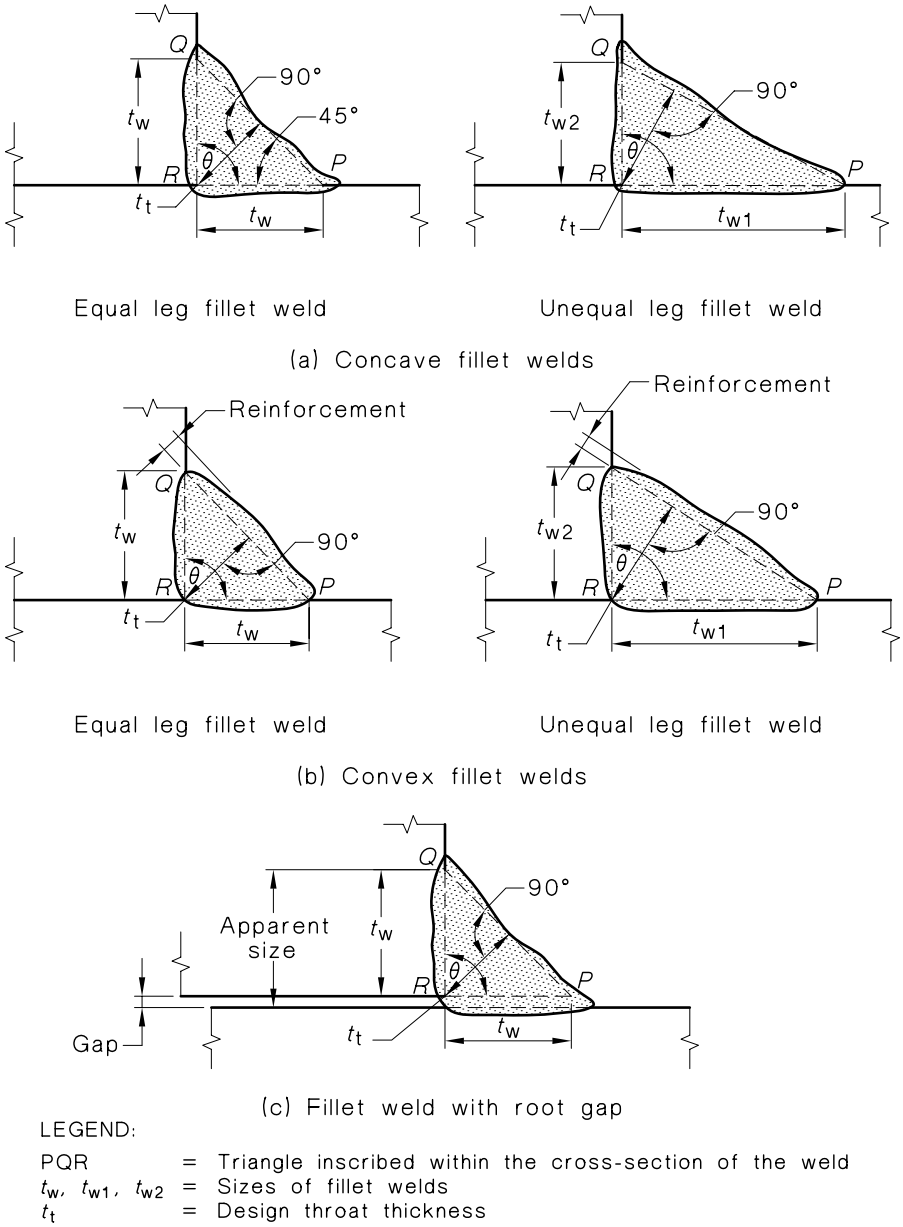

LEGEND:

PQR = Triangle inscribed within the cross-section of the weld
t_w, t_{w1}, t_{w2} = Sizes of fillet welds
t_t = Design throat thickness

FIGURE 9.7.3.1 FILLET WELD SIZE

9.7.3.2 *Minimum size of a fillet weld* The minimum size of a fillet weld, other than a fillet weld used to reinforce a butt weld, shall conform with Table 9.7.3.2, except that the size of the weld need not exceed the thickness of the thinner part joined.

TABLE 9.7.3.2

MINIMUM SIZE OF A FILLET WELD

Thickness of thickest part, t (mm)	Minimum size of a fillet weld, t_w (mm)
$t \leq 7$	3
$7 < t \leq 10$	4
$10 < t \leq 15$	5
$15 < t$	6

Accessed by SWINBURNE UNIVERSITY OF TECHNOLOGY on 15 Aug 2007

@Seismicisolation

@Seismicisolation

9.7.3.3 *Maximum size of a fillet weld along an edge* The maximum size of a fillet weld along an edge of material shall be—

(a) for material less than 6 mm in thickness, the thickness of the material (see Figure 9.7.3.3(a)); and

(b) for material 6 mm or more in thickness (see Figure 9.7.3.3(b)), unless the weld is designated on the drawing to be built out to obtain the design throat thickness (see Figure 9.7.3.3(c)), 1 mm less than the thickness of the material.

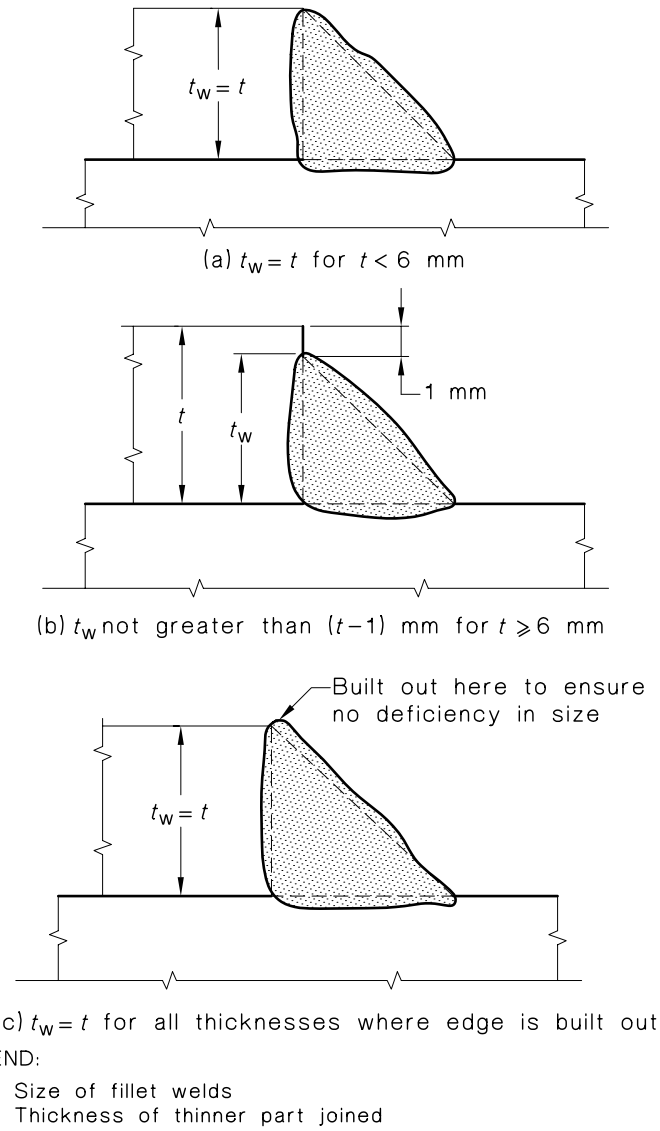

FIGURE 9.7.3.3 MAXIMUM SIZES OF FILLET WELDS ALONG EDGES

Accessed by SWINBURNE UNIVERSITY OF TECHNOLOGY on 15 Aug 2007

@Seismicisolation

@Seismicisolation

9.7.3.4 *Design throat thickness* The design throat thickness (t_t) of a fillet weld shall be as shown in Figure 9.7.3.1.

For a weld made by an automatic arc welding process, an increase in design throat thickness may be allowed as shown in Figure 9.7.3.4, provided that it can be demonstrated by means of a macro test on a production weld that the required penetration has been achieved. Where such penetration is achieved, the size of weld required may be correspondingly reduced to give the specified design throat thickness.

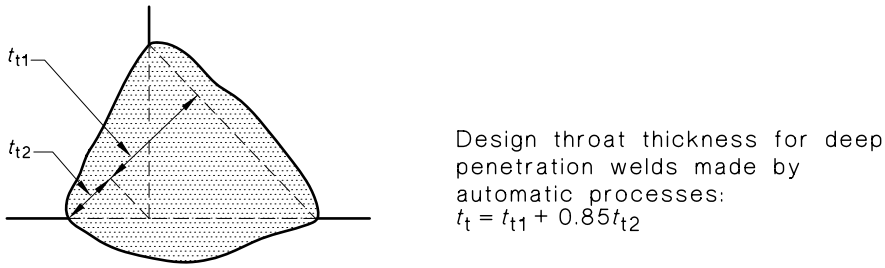

FIGURE 9.7.3.4 DEEP PENETRATION WELD

9.7.3.5 *Effective length* The effective length of a fillet weld shall be the overall length of the full-size fillet, including end returns.

The minimum effective length of a fillet weld shall be 4 times the size of the weld. However, if the ratio of the effective length of the weld to the size of the weld does not comply with this requirement, the size of the weld for design purposes shall be taken as 0.25 times the effective length. The minimum length requirement shall also apply to lap joints.

Any segment of intermittent fillet weld shall have an effective length of not less than 40 mm or 4 times the nominal size of the weld, whichever is the greater.

9.7.3.6 *Effective area* The effective area of a fillet weld shall be the product of the effective length and the design throat thickness.

9.7.3.7 *Transverse spacing of fillet welds* If two parallel fillet welds connect two components in the direction of the design action to form a built-up member, the transverse distance between the welds shall not exceed $32t_p$, except that in the case of intermittent fillet welds at the ends of a tension member, the transverse distance shall not exceed either $16t_p$ or 200 mm, where t_p is the thickness of the thinner of the two components connected.

It shall be permissible to use fillet welds in slots and holes in the direction of the design action in order to satisfy this Clause.

9.7.3.8 *Intermittent fillet welds* Except at the ends of a built-up member, the clear spacing between the lengths of consecutive collinear intermittent fillet welds shall not exceed the lesser of—

(a) for elements in compression . . . . . $16t_p$ and 300 mm; and

(b) for elements in tension . . . . . $24t_p$ and 300 mm.

9.7.3.9 *Built-up members—intermittent fillet welds* If intermittent fillet welds connect components forming a built-up member, the welds shall comply with the following requirements:

(a) At the ends of a tension or compression component of a beam, or at the ends of a tension member, when side fillets are used alone, they shall have a length along each joint line at least equal to the width of the connected component. If the connected component is tapered, the length of weld shall be the greater of—

(i) the width of the widest part; and

(ii) the length of the taper.

Accessed by SWINBURNE UNIVERSITY OF TECHNOLOGY on 15 Aug 2007

@Seismicisolation

@Seismicisolation

(b) At the cap plate or baseplate of a compression member, welds shall have a length along each joint line of at least the maximum width of the member at the contact face.

(c) Where a beam is connected to the face of a compression member, the welds connecting the compression member components shall extend between the levels of the top and bottom of the beam and in addition—

(i) for an unrestrained connection, a distance (d) below the lower face of the beam; and

(ii) for a restrained connection, a distance (d) above and below the upper and lower faces of the beam,

where d is the maximum cross-sectional dimension of the compression member.

9.7.3.10 *Strength limit state for fillet weld* A fillet weld subject to a design force per unit length of weld (v_w^*) shall satisfy—

$$v_w^* \leq \phi v_w$$

where

ϕ = capacity factor (see Table 3.4)

v_w = nominal capacity of a fillet weld per unit length.

The design force per unit length (v_w^*) shall be the vectorial sum of the design forces per unit length on the effective area of the weld.

The nominal capacity of a fillet weld per unit length (v_w) shall be calculated as follows:

$$v_w = 0.6 f_{uw} t_t k_r$$

where

f_{uw} = nominal tensile strength of weld metal (see Table 9.7.3.10(1))

t_t = design throat thickness

k_r = reduction factor given in Table 9.7.3.10(2) to account for the length of a welded lap connection (l_w). For all other connection types, k_r equals 1.0.

TABLE 9.7.3.10(1)

NOMINAL TENSILE STRENGTH OF WELD METAL (f_{uw})

Manual metal arc electrode (AS/NZS 1553.1)	Submerged arc (AS 1858.1) Flux cored arc (AS 2203) Gas metal arc (AS/NZS 2717.1)	Nominal tensile strength of weld metal, f_{uw} MPa
E41XX	W40X (see Note)	410
E48XX	W50X	480

NOTE: Not included in AS/NZS 2717.1.

TABLE 9.7.3.10(2)

REDUCTION FACTOR FOR A WELDED LAP CONNECTION (k_r)

Length of weld, l_w m	$l_w \leq 1.7$	$1.7 < l_w \leq 8.0$	$l_w > 8.0$
k_r	1.00	$1.10 - 0.06 l_w$	0.62

Accessed by SWINBURNE UNIVERSITY OF TECHNOLOGY on 15 Aug 2007

@Seismicisolation

@Seismicisolation

9.7.4 Plug and slot welds

9.7.4.1 *Plug and slot welds in the form of fillet welds around the circumference of the hole or slot* These plug and slot welds shall be regarded as a fillet weld with an effective length as defined in Clause 9.7.3.5, and a nominal capacity as defined in Clause 9.7.3.10. The minimum size shall be as for a fillet weld (see Clause 9.7.3.2.).

9.7.4.2 *Plug and slot welds in hole filled with weld metal* The effective shear area (A_w) of a plug or slot weld in a hole filled with weld metal shall be considered as the nominal cross-sectional area of the hole or slot in the plane of the faying surface.

Such a plug or slot weld subject to a design shear force (V_w^*) shall satisfy—

$$V_w^* \leq \phi V_w$$

where

ϕ = capacity factor (see Table 3.4)

V_w = nominal shear capacity of the weld.

The nominal shear capacity (V_w) of the weld shall be calculated as follows:

$$V_w = 0.60 f_{uw} A_w$$

9.7.4.3 *Limitations* Plug or slot welds may only be used to transmit shear in lap joints or to prevent buckling of lapped parts or to join component parts of built-up members.

9.7.5 Compound weld

9.7.5.1 *Description of a compound weld* A compound weld, defined as a fillet weld superimposed on a butt weld, shall be as specified in AS 1101.3.

9.7.5.2 *Design throat thickness* The design throat thickness of a compound weld, for use in design calculations, shall be—

(a) for a complete penetration butt weld, the size of the butt weld without reinforcement; and

(b) for an incomplete penetration butt weld, the shortest distance from the root of the incomplete penetration butt weld to the face of the fillet weld as determined by the largest inscribed triangle in the total weld cross-section, with a maximum value equal to the thickness of the part whose end or edge butts against the face of the other part (see Figure 9.7.5.2).

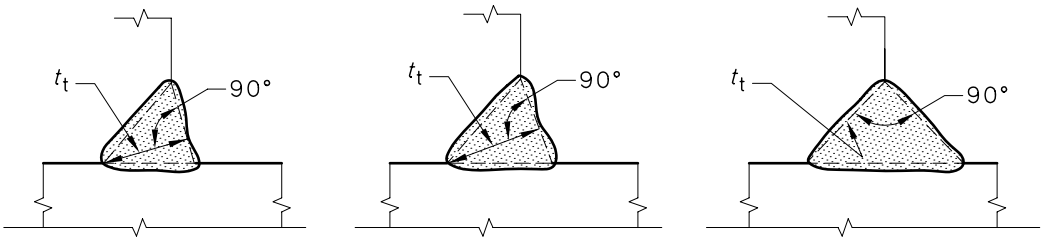

NOTE: The design throat thickness (t_t) of a weld is the minimum distance from the root of a weld to its face, less any reinforcement. The three sketches above illustrate this concept.

FIGURE 9.7.5.2 DESIGN THROAT THICKNESSES OF COMPOUND WELDS

9.7.5.3 *Strength limit state* The weld shall satisfy the requirements of Clause 9.7.2.7.

Accessed by SWINBURNE UNIVERSITY OF TECHNOLOGY on 15 Aug 2007

@Seismicisolation

@Seismicisolation

9.8 ASSESSMENT OF THE STRENGTH OF A WELD GROUP

9.8.1 Weld group subject to in-plane loading

9.8.1.1 *General method of analysis* The design force per unit length in a fillet weld group subject to in-plane loading shall be determined in accordance with the following:

(a) The connection plates shall be considered to be rigid and to rotate relative to each other about a point known as the instantaneous centre of rotation of the weld group.

(b) In the case of a weld group subject to a pure couple only, the instantaneous centre of rotation coincides with the weld group centroid.

In the case of a weld group subject to an in-plane shear force applied at the group centroid, the instantaneous centre of the rotation is at infinity and the design force per unit length (v_w^*) is uniformly distributed throughout the group.

In all other cases, either the results of independent analyses for a pure couple alone and for an in-plane shear force applied at the weld group centroid shall be superposed, or a recognised method of analysis shall be used.

(c) The design force per unit length (v_w^*) at any point in the fillet weld group shall be assumed to act at right angles to the radius from that point to the instantaneous centre, and shall be taken as proportional to that radius.

A fillet weld shall satisfy the requirements of Clause 9.7.3.10 at all points in the fillet weld group using the appropriate capacity factor (ϕ) for a weld group (see Table 3.4). In the case of a fillet weld group of constant throat thickness, it will be sufficient to check only that point in the group defined by the maximum value of the radius to the instantaneous centre.

9.8.1.2 *Alternative analysis* The design force per unit length in the fillet weld group may alternatively be determined by considering the fillet weld group as an extension of the connected member and proportioning the design force per unit length in the fillet weld group to satisfy equilibrium between the fillet weld group and the elements of the connected member.

A fillet weld shall satisfy the requirements of Clause 9.7.3.10 at all points in the fillet weld group using the appropriate capacity factor (ϕ) for a weld group (see Table 3.4).

9.8.2 Weld group subject to out-of-plane loading

9.8.2.1 *General method of analysis* The design force per unit length in a fillet weld group subject to out-of-plane loading shall be determined in accordance with the following:

(a) The fillet weld group shall be considered in isolation from the connected element; and

(b) The design force per unit length in the fillet weld resulting from a design bending moment shall be considered to vary linearly with the distance from the relevant centroidal axes. The design force per unit length in the fillet weld group resulting from any shear force or axial force shall be considered to be uniformly distributed over the length of the fillet weld group.

A fillet weld shall satisfy the requirements of Clause 9.7.3.10 at all points in the fillet weld group, using the appropriate capacity factor (ϕ) for a weld group (see Table 3.4).

9.8.2.2 *Alternative analysis* The design force per unit length in a fillet weld group may alternatively be determined by considering the fillet weld group as an extension of the connected member and distributing the design forces among the welds of the fillet weld group so as to satisfy equilibrium between the fillet weld group and the elements of the connected member.

A fillet weld shall satisfy the requirements of Clause 9.7.3.10 at all points in the fillet weld group, using the appropriate capacity factor (ϕ) for a weld group (see Table 3.4).

Accessed by SWINBURNE UNIVERSITY OF TECHNOLOGY on 15 Aug 2007

@Seismicisolation

@Seismicisolation

9.8.3 Weld group subject to in-plane and out-of-plane loading

9.8.3.1 *General method of analysis* The design force per unit length as determined from analyses in accordance with Clauses 9.8.1.1 and 9.8.2.1 shall satisfy Clause 9.7.3.10 at all points in the fillet weld group, using the appropriate capacity factor (ϕ) for a weld group (see Table 3.4).

9.8.3.2 *Alternative analysis* The design force per unit length as determined from analyses in accordance with Clauses 9.8.1.2 and 9.8.2.2 shall satisfy Clause 9.7.3.10 at all points in the fillet weld group, using the appropriate capacity factor (ϕ) for a weld group (see Table 3.4).

9.8.4 Combination of weld types If two or more types of weld are combined in a single connection, the design capacity of the connection shall be the sum of the design capacities of each type, determined in accordance with this Section.

9.9 PACKING IN CONSTRUCTION Where packing is welded between two members and is less than 6 mm thick, or is too thin to allow provision of adequate welds or to prevent buckling, the packing shall be trimmed flush with the edges of the element subject to the design action and the size of the welds along the edges shall be increased over the required size by an amount equal to the thickness of the packing.

Otherwise the packing shall extend beyond the edges and shall be welded to the piece to which it is fitted.

Accessed by SWINBURNE UNIVERSITY OF TECHNOLOGY on 15 Aug 2007

@Seismicisolation

@Seismicisolation

SECTION 14 FABRICATION

14.1 GENERAL A fabricated item shall be liable to rejection if—

(a) the material does not satisfy the requirements of Clause 14.2;

(b) the fabrication does not satisfy the requirements of Clause 14.3; or

(c) it does not satisfy the tolerances specified in Clause 14.4.

The fabricated item may be accepted nonetheless if—

(i) it can be demonstrated that the structural adequacy and intended use of the item are not impaired thereby; or

(ii) it passes testing in accordance with the appropriate Clauses of Section 17.

Fabricated items which do not satisfy either (i) or (ii) above and which do not satisfy either Clause 14.2, Clause 14.3 or Clause 14.4 shall be rejected.

14.2 MATERIAL

14.2.1 General All material shall satisfy the requirements of the appropriate material Standard specified in Clauses 2.2, 2.3 and 2.4.

Surface defects in the steel shall be removed using the methods specified in the appropriate Standards listed in Clause 2.2.1.

14.2.2 Identification The steel grade shall be identifiable at all stages of fabrication, or the steel shall be classed as unidentified steel and only used in accordance with Clause 2.2.3. Any marking of steelwork shall be such as to not damage the material.

14.3 FABRICATION PROCEDURES

14.3.1 Methods All material shall be straightened or formed to the specified configuration by methods that will not reduce the properties of the material below the values used in design. Steel may be bent or pressed to the required shape by either hot or cold processes.

Local application of heat or mechanical means may be used to introduce or correct camber, sweep and out-of-straight. The temperature of heated areas shall not exceed 650°C.

14.3.2 Full contact splices Full contact splices may be produced by cold saw cutting or machining.

The surfaces of such splices shall be such that, when the ends of the two members are abutted, the alignment of the members and the gap shall be within the tolerances specified in Clause 14.4.4.2.

14.3.3 Cutting Cutting may be by sawing, shearing, cropping, machining and thermal cutting processes, as appropriate.

Shearing of items over 16 mm thick shall not be carried out when the item is to be galvanized and subject to tensile force or bending moment unless the item is stress relieved subsequently.

Any cut surface not incorporated in a weld shall have a roughness not greater than the appropriate value given in Table 14.3.3. A cut surface to be incorporated in a weld shall comply with AS/NZS 1554.1.

Accessed by SWINBURNE UNIVERSITY OF TECHNOLOGY on 15 Aug 2007

@Seismicisolation

@Seismicisolation

TABLE 14.3.3

MAXIMUM CUT SURFACE ROUGHNESS

Application	Maximum roughness, CLA ϕm
Normal applications, i.e. where the face and edges remain as-cut or with minor dressing	25
Fatigue applications (Detail categories as defined in Clause 11.5)	
detail category ≥ 80 MPa	12
detail category < 80 MPa	25

NOTES:

1 Roughness values may be estimated by comparison with surface replicas, such as the WTIA. Flame Cut Surface replicas.

2 Suitable techniques of flame cutting are given in WTIA Technical Note 5.

3 CLA ≡ *Centre Line Average Method*.

Cut surface roughness exceeding these values shall be repaired by grinding to give a value less than the specified roughness. Grinding marks shall be parallel to the direction of the cut.

Notches and gouges, not closer than 20*t* (where *t* is the component thickness) and not exceeding 1% of the total surface area on an otherwise satisfactory surface, are acceptable provided that imperfections greater than *t*/5 but not exceeding 2 mm in depth are removed by machining or grinding. Imperfections outside the above limits shall be repaired by welding in accordance with AS/NZS 1554.1.

A re-entrant corner shall be shaped notch free to a radius of at least 10 mm.

14.3.4 Welding Welding shall comply with AS/NZS 1554.1 or AS/NZS 1554.5 as appropriate (see Clause 11.1.5), and welding of studs shall comply with AS 1554.2.

14.3.5 Holing

14.3.5.1 *General* A round hole for a bolt shall either be machine flame cut, or drilled full size, or subpunched 3 mm undersize and reamed to size, or punched full size.

A slotted hole shall be either machine flame cut, or punched in one operation, or formed by drilling two adjacent holes and completed by machine flame cutting.

Hand flame cutting of a bolt hole shall not be permitted except as a site rectification measure for holes in column base plates.

A punched hole shall only be permitted in material whose yield stress (f_y) does not exceed 360 MPa and whose thickness does not exceed ($5600/f_y$) mm.

14.3.5.2 *Hole size* The nominal diameter of a completed hole other than a hole in a base plate shall be 2 mm larger than the nominal bolt diameter for a bolt not exceeding 24 mm in diameter, and not more than 3 mm larger for a bolt of greater diameter.

For a hole in a base plate, the hole diameter shall be not more than 6 mm greater than the anchor bolt diameter. A special plate washer of minimum thickness 4 mm shall be used under the nut if the hole diameter is 3 mm or more larger than the bolt diameter.

An oversize or slotted hole and the limitations on its use shall comply with the following:

(a) *Oversize or slotted hole* An oversize or slotted hole shall be permitted, provided that the following requirements are satisfied:

(i) An oversize hole shall not exceed $1.25d_f$ or $(d_f + 8)$ mm in diameter, whichever is the greater, where d_f is the nominal bolt diameter, in millimetres.

Accessed by SWINBURNE UNIVERSITY OF TECHNOLOGY on 15 Aug 2007

@Seismicisolation

@Seismicisolation

(ii) A short slotted hole shall not exceed the appropriate hole size of this Clause in width and $1.33d_f$ or $(d_f + 10)$ mm in length, whichever is the greater.

(iii) A long slotted hole shall not exceed the appropriate hole size of this Clause in width and $2.5d_f$ in length.

(b) *Limitations on use* The use of an oversize or slotted hole shall be limited so that the following requirements are satisfied:

(i) *Oversize hole* An oversize hole may be used in any or all plies of bearing-type and friction-type connections, provided hardened or plate washers are installed over the oversize hole under both the bolt head and the nut.

(ii) *Short slotted hole* A short slotted hole may be used in any or all plies of a friction-type or a bearing-type connection, provided hardened or plate washers are installed over the holes under both the bolt head and the nut.

In a friction-type connection subject to a shear force, a short slotted hole may be used without regard to the direction of loading.

In a bearing-type connection subject to a shear force, a short slotted hole may be used only where the connection is not eccentrically loaded and the bolt can bear uniformly, and where the slot is normal to the direction of the design action.

(iii) *Long slotted hole* A long slotted hole may be used only in alternate plies of either a friction-type or bearing-type connection, provided a plate washer not less than 8 mm thick is used to completely cover any long slotted hole under both the bolt head and the nut.

In a friction-type connection subject to a shear force, a long slotted hole may be used without regard to direction of loading.

In a bearing-type connection subject to a shear force, a long slotted hole may be used only where the connection is not eccentrically loaded and where the bolt can bear uniformly, and where the slot is normal to the direction of the load.

14.3.6 Bolting

14.3.6.1 *General* All bolts and associated nuts and washers shall comply with the appropriate bolt material Standard specified in Clause 2.3.1. All material within the grip of the bolt shall be steel and no compressible material shall be permitted in the grip.

The length of a bolt shall be such that at least one clear thread shows above the nut and at least one thread plus the thread run out is clear beneath the nut after tightening.

One washer shall be provided under the rotated part.

Where the slope of the surfaces of parts in contact with the bolt head or nut exceeds 1:20 with respect to a plane normal to the bolt axis, a suitably tapered washer shall be provided against the tapered surface and the non-rotating part shall be placed against the tapered washer.

The nuts used in a connection subject to vibration shall be secured to prevent loosening. (See Clause 9.1.6)

14.3.6.2 *Tensioned bolt* A tensioned high strength bolt when installed during fabrication shall be installed in accordance with Clauses 15.2.4 and 15.2.5. The contact surfaces of a joint using a tensioned bolt shall be prepared in accordance with Clause 14.3.6.3.

14.3.6.3 *Preparation of surfaces in contact* Preparation of surfaces in contact shall be as follows:

(a) *General* All oil, dirt, loose scale, loose rust, burrs, fins and any other defects on the surfaces of contact which will prevent solid seating of the parts in the snug-tight condition shall be removed.

NOTES:

1 If cleaning is necessary to meet these requirements, reference should be made to AS 1627.7.

2 A clean 'as-rolled' surface with tight mill scale is acceptable without further cleaning.

3 Snug-tight is defined in Clause 15.2.5.2.

Accessed by SWINBURNE UNIVERSITY OF TECHNOLOGY on 15 Aug 2007

@Seismicisolation

@Seismicisolation

(b) *Friction-type connection* For a friction-type connection, the contact surfaces shall be clean 'as-rolled' surfaces or equivalent and, in addition to satisfying the provisions of Item (a), shall be free from paint, lacquer, galvanizing or other applied finish unless the applied finish has been tested in accordance with Appendix J to establish the friction coefficient (see Clause 9.3.3.2).

In a non-coated connection, paint including any overspray shall be excluded from areas closer than one bolt diameter to any hole but not less than 25 mm from the edge of any hole and all areas within the bolt group.

(c) *Bearing-type connection* For a bearing-type connection, an applied finish on the contact surfaces shall be permitted.

14.3.7 Pinned connection Pins and holes shall be finished so that the forces are distributed evenly to the joint plies.

14.4 TOLERANCES

14.4.1 General The tolerance limits of this Clause shall be satisfied after fabrication is completed and any corrosion protection has been applied. Unless otherwise specified, the tolerance on all structural dimensions shall be ±2 mm.

14.4.2 Notation For the purpose of this Clause—

a_0, a_1 = out-of-square dimensions of flanges

a_2, a_3 = diagonal dimensions of a box section

b = lesser dimension of a web panel

b_f = width of a flange

d = depth of a section

d_o = overall depth of a member including out-of-square dimensions

d_1 = clear depth between flanges ignoring fillets or welds

e = web off-centre dimension

l = member length

Δ_f = out-of-flatness of a flange plate

Δ_v = deviation from verticality of a web at a support

Δ_w = out-of-flatness of a web

14.4.3 Cross-section After fabrication, the tolerances on any cross-section of a rolled section or a plate shall be those specified in AS/NZS 3678 or AS/NZS 3679.1, as appropriate, in respect of depth, flange width, flange thickness, web thickness, out-of-square, and web off-centre.

For any built-up section, the deviations from the specified dimensions of the cross-section shall not exceed the following:

(a) Depth of a section (d) (see Figure 14.4.3(1))

for $d \leq 900$, ±3 mm

for $900 < d \leq 1800$, $\pm\left[3 + \frac{(d - 900)}{300}\right]$ mm

for $d > 1800$, ±6 mm

(b) Width of a flange (b_f) (see Figure 14.4.3(1))

for all b_f, ±6 mm

Accessed by SWINBURNE UNIVERSITY OF TECHNOLOGY on 15 Aug 2007

@Seismicisolation

@Seismicisolation

(c) Out-of-square of an individual flange (a_0 or a_1) (see Figure 14.4.3(1))

for $b_f \leq 600$ mm, ± 3 mm

for $b_f > 600$ mm, $\pm \left(\frac{b_f}{200}\right)$ mm

(d) Total out-of-square of two flanges ($a_0 + a_1$) (see Figure 14.4.3(1))

for $b_f \leq 600$ mm, ± 6 mm

for $b_f > 600$ mm, $\pm \left(\frac{b_f}{100}\right)$ mm

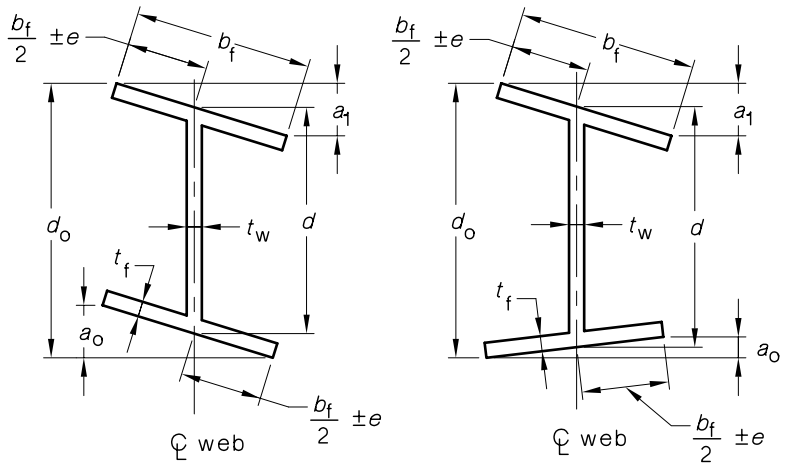

NOTES:

1 Dimension d, d_o, a_o and a_1 are measured parallel to the centreline of the web. Dimensions b_f and ($0.5b_f \pm e$) are measured parallel to the plane of the flange.

2 Dimesions d is measured at the centreline of the web.

FIGURE 14.4.3(1) TOLERANCES ON A CROSS-SECTION

(e) Out-of-flatness a of web (Δ_w) (see Figure 14.4.3(2))

d_1/150 mm for unstiffened web,

b/100 mm for stiffened web with intermediate stiffeners,

measured on a gauge length in the direction of d_1 or b, as appropriate.

(f) Deviation from verticality of a web at a support (Δ_v) (see Figure 14.4.3(2))

for $d \leq 900$ mm, ± 3 mm

for $d > 900$ mm, $\pm \left(\frac{d}{200}\right)$ mm

Accessed by SWINBURNE UNIVERSITY OF TECHNOLOGY on 15 Aug 2007

@Seismicisolation

@Seismicisolation

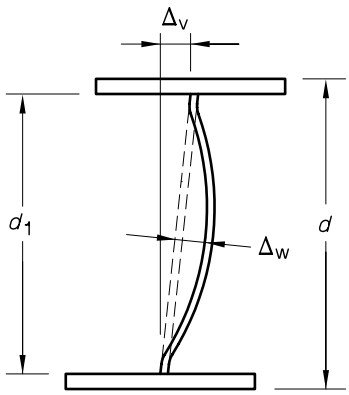

FIGURE 14.4.3(2) TOLERANCES ON A WEB

(g) Tolerance on shape of a built-up box section (see Figure 14.4.3.(3))

A built-up box section shall not deviate at the diaphragm from the prescribed shape by more than ± 5 mm or $\pm[(a_2 + a_3)/400]$ mm, whichever is greater, unless connection requirements necessitate more stringent tolerances.

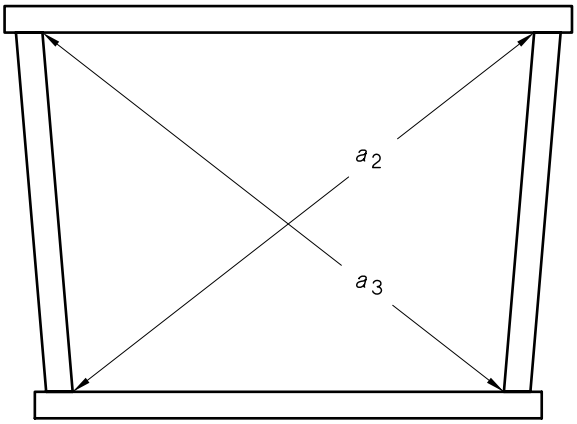

FIGURE 14.4.3(3) TOLERANCE ON SHAPE OF A BOX SECTION

(h) Off-centre of a web (e) (see Figure 14.4.3(4)) ± 6 mm

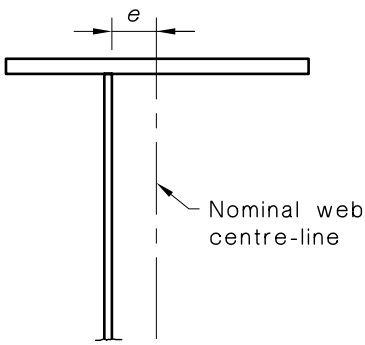

FIGURE 14.4.3(4) TOLERANCE ON OFF-CENTRE OF A WEB

Accessed by SWINBURNE UNIVERSITY OF TECHNOLOGY on 15 Aug 2007

@Seismicisolation

@Seismicisolation

(j) Out-of-flatness of a flange (Δ_f) (see Figure 14.4.3(5))

for $b_f \leq 450$ mm $\pm \left(\frac{b_r}{150}\right)$ mm

for $b_f > 450$ mm ± 3 mm

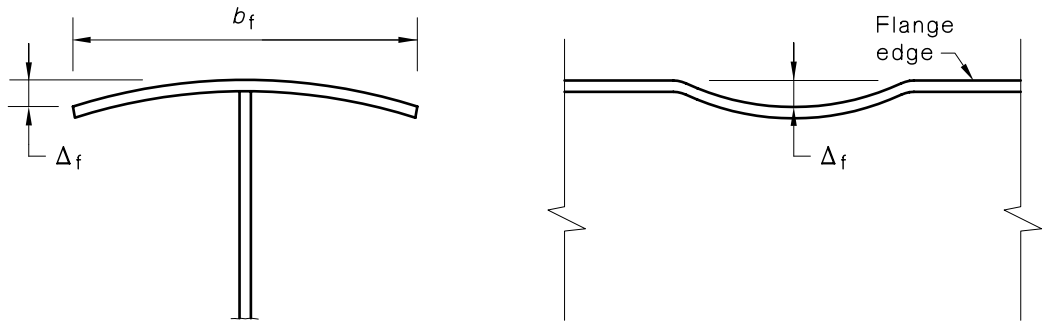

FIGURE 14.4.3(5) TOLERANCE ON OUT-OF-FLATNESS OF A FLANGE

14.4.4 Compression member

14.4.4.1 *Straightness* A member shall not deviate about either principal axis from a straight line drawn between end points by an amount exceeding l/1000 or 3 mm whichever is the greater.

14.4.4.2 *Full contact splice* If the ends of two butting lengths of a member, or the end of a member and the contact face of an adjoining cap plate or baseplate, are required to be in full contact, such a requirement shall be deemed to be satisfied if the bearing surfaces are prepared so that when the abutting member length or lengths are aligned to within the tolerance specified in Clause 15.3.3, the maximum clearance between the abutting surfaces shall not exceed 1 mm, and shall also not exceed 0.5 mm over at least 67% of the contact area.

14.4.4.3 *Length* The length of a member shall not deviate from its specified length by more than ± 2 mm.

14.4.5 Beam

14.4.5.1 *Straightness* A beam shall not deviate from a straight line drawn between the ends of the beam by more than the following:

(a) *Camber*—measured with the web horizontal on a test surface (see Figure 14.4.5.1(a)). The tolerance on specified camber shall not exceed l/1000 or 10 mm whichever is the lesser.

(b) *Sweep*—measured with the web vertical (see Figure 14.4.5.1(b)). The sweep in plan shall not exceed l/1000 or 3 mm whichever is the greater.

14.4.5.2 *Length* The length of a beam shall not deviate from its specified length by more than ± 2 mm for lengths less than 10 m, and ± 4 mm for lengths greater than 10 m.

14.4.6 Tension member

14.4.6.1 *Straightness* A member shall not deviate from a straight line drawn between end points by more than l/500, where l is the length between end points.

14.4.6.2 *Length* The length of a tension member shall not deviate from its specified length by more than ± 2 mm for lengths less than 10 m, and ± 4 mm for lengths greater than 10 m.

Accessed by SWINBURNE UNIVERSITY OF TECHNOLOGY on 15 Aug 2007

@Seismicisolation

@Seismicisolation

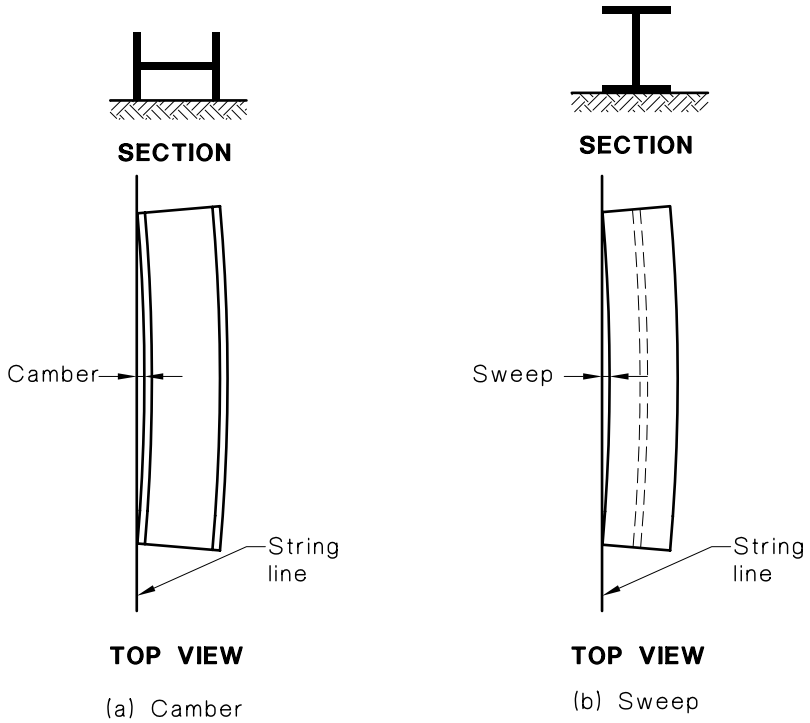

FIGURE 14.4.5.1 MEASUREMENT OF CAMBER AND SWEEP

Accessed by SWINBURNE UNIVERSITY OF TECHNOLOGY on 15 Aug 2007

@Seismicisolation

@Seismicisolation

SECTION 15 ERECTION

15.1 GENERAL

15.1.1 Rejection of an erected item An erected item shall be liable to rejection if—

(a) the erection does not satisfy the requirements of Clause 15.2; or

(b) it does not satisfy the tolerances specified in Clause 15.3.

The erected item may be accepted nonetheless if—

(i) it can be demonstrated that the structural adequacy and intended use of the item are not impaired thereby; or

(ii) it passes testing in accordance with the appropriate clauses of Section 17.

Erected items which do not satisfy either (i) or (ii) above and which do not satisfy either Clause 15.2 or 15.3 shall be rejected.

Bolts, nuts and washers shall be liable to rejection if, in the erected structure, they do not comply with Clauses 14.3.6, 15.2.3, 15.2.4 and 15.2.5, unless it can be demonstrated that the structural adequacy and intended use of the item are not impaired thereby.

Grouting at supports which does not satisfy the requiremets of Clause 15.5 shall be rejected.

15.1.2 Safety during erection During the erection of a structure, steelwork shall be made safe against erection loading, including loading due to erection equipment or its operation, and wind.

15.1.3 Equipment support Equipment supported on partly erected steelwork shall not induce actions in the steel greater than the design capacities permitted in this Standard.

15.1.4 Reference temperature Dimensions shall be set out on the basis of a reference temperature of 20 degrees Celsius.

15.2 ERECTION PROCEDURES

15.2.1 General The requirements specified in Clause 14.3 shall also be observed during the erection of the steel frame and during any modifications to the steelwork in the course of erection.

This requirement shall apply to the following:

(a) Full contact splices (see Clause 14.3.2).

(b) Cutting (see Clause 14.3.3).

(c) Welding (see Clause 14.3.4).

(d) Holing (see Clause 14.3.5).

(e) Bolting (see Clause 14.3.6).

Throughout the erection of the structure, the steelwork shall be securely bolted or fastened to ensure that it can adequately withstand all loadings liable to be encountered during erection, including, where necessary, those from erection plant and its operation. Any temporary bracing or temporary restraint shall be left in position until such time as erection is sufficiently advanced as to allow its safe removal.

All connections for temporary bracing and members to be provided for erection purposes shall be made in such a manner as not to weaken the permanent structure or to impair its serviceability. All welding of such connections and their removal shall be in accordance with AS/NZS 1554.1.

Accessed by SWINBURNE UNIVERSITY OF TECHNOLOGY on 15 Aug 2007

@Seismicisolation

@Seismicisolation

15.2.2 Delivery, storage and handling Members, components and fasteners shall be handled and stacked in such a way that damage is not caused to them. Means shall be provided to minimize damage to the corrosion protection on the steelwork.

All work shall be protected from damage in transit. Particular care shall be taken to stiffen free ends, prevent permanent distortion, and adequately protect all surfaces prepared for full contact splices. All bolts, nuts, washers, screws, small plates and articles generally shall be suitably packed and identified.

15.2.3 Assembly and alignment All matching holes shall align with each other so that a gauge or drift, equal in diameter to that of the bolts, shall pass freely through the assembled contact faces at right angles to them. Drifting to align holes shall be done in a manner that will not distort the metal nor enlarge the holes.

Each part of the structure shall be aligned as soon as practicable after it has been erected. Permanent connections shall not be made between members until sufficient of the structure has been aligned, levelled, plumbed and temporarily connected to ensure that members will not be displaced during subsequent erection or alignment of the remainder of the structure.

Each bolt and nut shall be assembled with at least one washer. A washer shall be placed under the rotating component. Where the slope of the surfaces of parts in contact with the bolt head or nut exceeds 1:20 with respect to a plane normal to the bolt axis, a suitable tapered washer shall be used against the sloping surface. The non-rotating component shall be placed against the tapered washer.

Bolting categories 4.6/S and 8.8/S shall be installed to the snug-tight condition specified in Clause 15.2.5.2(a).

Hardened or plate washers shall be used under both the bolt head and nut for any slotted and oversize holes as specified in Clause 14.3.5.2(b).

15.2.4 Assembly of a connection involving tensioned bolts

15.2.4.1 *Placement of a nut* The nut shall be placed so that the mark specified in AS/NZS 1252 to identify a high strength nut is visible after tightening.

15.2.4.2 *Packing* Packing shall be provided wherever necessary to ensure that the load-transmitting plies are in effective contact when the connection is tightened to the snug-tight condition defined in Clause 15.2.5.2(a). All packing shall be steel with a surface condition similar to that of the adjacent plies.

15.2.4.3 *Tightening pattern* Snug-tightening and final tensioning of the bolts in a connection shall proceed from the stiffest part of the connection towards the free edges.

High strength structural bolts that are to be tensioned may be used temporarily during erection to facilitate assembly, but if so used they shall not be finally tensioned until all bolts in the connection have been snug-tightened in the correct sequence.

15.2.4.4 *Retensioning* Retensioning of bolts which have been fully tensioned shall be avoided, except that if retensioning is carried out, it shall only be permitted once and only where the bolt remains in the same hole in which it was originally tensioned and with the same grip.

Retensioning of galvanized bolts shall not be permitted.

Under no circumstances shall bolts which have been fully tensioned be reused in another hole.

Touching up or retensioning of previously tensioned bolts which may have been loosened by the tensioning of adjacent bolts shall not be considered as retensioning.

Accessed by SWINBURNE UNIVERSITY OF TECHNOLOGY on 15 Aug 2007

@Seismicisolation

@Seismicisolation

15.2.5 Methods of tensioning

15.2.5.1 *General* The method of tensioning shall be in accordance with either Clause 15.2.5.2 or Clause 15.2.5.3.

In the completed connection, all bolts shall have at least the minimum bolt tension specified in Table 15.2.5.1 when all bolts in the bolt group are tightened.

TABLE 15.2.5.1

MINIMUM BOLT TENSION

Nominal diameter of bolt	Minimum bolt tension kN
M16	95
M20	145
M24	210
M30	335
M36	490

NOTE: The minimum bolt tensions given in this Table are approximately equivalent to the minimum proof loads given in AS/NZS 1252.

15.2.5.2 *Part-turn method of tensioning* Tensioning of bolts by the part-turn method shall be in accordance with the following procedure:

(a) On assembly, all bolts in the connection shall be first tightened to a snug-tight condition to ensure that the load-transmitting plies are brought into effective contact.

Snug-tight is the tightness attained by a few impacts of an impact wrench or by the full effort of a person using a standard podger spanner.

(b) After completing snug-tightening, location marks shall be established to mark the relative position of the bolt and the nut and to control the final nut rotation.

Observation of the final nut rotation may be achieved by using marked wrench sockets, but location marks shall be permanent when required for inspection.

(c) Bolts shall be finally tensioned by rotating the nut by the amount given in Table 15.2.5.2. During the final tensioning, the component not turned by the wrench shall not rotate.

Accessed by SWINBURNE UNIVERSITY OF TECHNOLOGY on 15 Aug 2007

@Seismicisolation

@Seismicisolation

TABLE 15.2.5.2

NUT ROTATION FROM THE SNUG-TIGHT CONDITION

Bolt length (underside of head to end of bolt)	Disposition of outer face of bolted parts (see Notes 1, 2, 3 and 4)		
	Both faces normal to bolt axis	One face normal to bolt axis and other sloped	Both faces sloped
Up to and including 4 diameters	1/3 turn	1/2 turn	2/3 turn
Over 4 diameters but not exceeding 8 diameters	1/2 turn	2/3 turn	5/6 turn
Over 8 diameters but not exceeding 12 diameters (see Note 5)	2/3 turn	5/6 turn	1 turn

NOTES:

1 Tolerance on rotation: for 1/2 turn or less, one-twelfth of a turn (30°) over and nil under tolerance; for 2/3 turn or more, one-eighth of a turn (45°) over and nil under tolerance.

2 The bolt tension achieved with the amount of nut rotation specified in Table 15.2.5.2 will be at least equal to the minimum bolt tension specified in Table 15.2.5.1.

3 Nut rotation is the rotation relative to the bolt, regardless of the component turned.

4 Nut rotations specified are only applicable to connections in which all material within the grip of the bolt is steel.

5 No research has been performed to establish the turn-of-nut procedure for bolt lengths exceeding 12 diameters. Therefore, the required rotation should be determined by actual test in a suitable tension measuring device which simulates conditions of solidly fitted steel.

15.2.5.3 *Tensioning by use of direct-tension indication device* Tensioning of bolts using a direct-tension indication device shall be in accordance with the following procedure:

(a) The suitability of the device shall be demonstrated by testing a representative sample of not less than three bolts for each diameter and grade of bolt in a calibration device capable of indicating bolt tension. The calibration test shall demonstrate that the device indicates a tension not less than 1.05 times the minimum bolt tension specified in Table 15.2.5.1.

(b) On assembly, all bolts and nuts in the connection shall be first tightened to a snug-tight condition defined in Clause 15.2.5.2(a).

(c) After completing snug-tightening, the bolt shall be tensioned to provide the minimum bolt tension specified in Clause 15.2.5.1. This shall be indicated by the tension indication device.

NOTE: Tensioning of bolts using a direct-tension indication device should also be in accordance with the manufacturer's specification.

15.3 TOLERANCES

15.3.1 Location of anchor bolts Anchor bolts shall be restrained in position both in a vertical and a horizontal direction during all setting-in operations.

Anchor bolts shall be set out in accordance with the erection drawings. They shall not vary from the positions shown on the erection drawings by more than the following: (See Figure 15.3.1.)

(a) 3 mm centre-to-centre of any two bolts within an anchor bolt group, where an anchor bolt group is defined as the set of anchor bolts which receives a single fabricated steel member.

Accessed by SWINBURNE UNIVERSITY OF TECHNOLOGY on 15 Aug 2007

@Seismicisolation

@Seismicisolation

(b) 6 mm centre-to-centre of adjacent anchor bolt groups.

(c) Maximum accumulation of 6 mm per 30 000 mm along an established column line of multiple anchor bolt groups, but not to exceed a total of 25 mm. The established column line is the actual field line most representative of the centres of the as-built anchor bolt groups along a line of columns.

(d) 6 mm from the centre of any anchor bolt group to the established column line through that group.

Anchor bolts shall be set perpendicular to the theoretical bearing surface, threads shall be protected and free of concrete and nuts shall run freely on the threads.

The projection of the end of the anchor bolt from the theoretical bearing surface shall not be more than 25 mm longer nor 5 mm shorter than that specified.

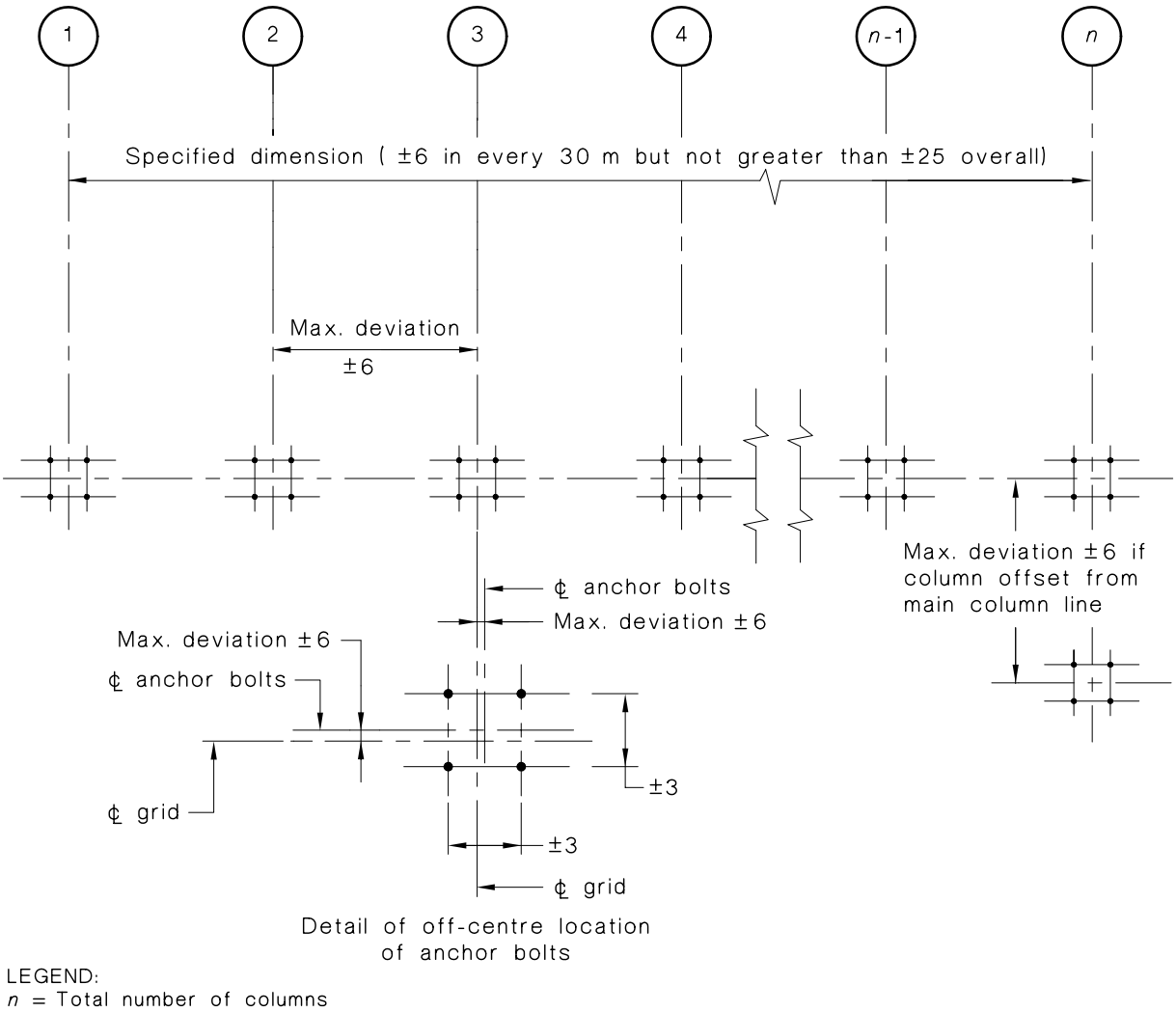

FIGURE 15.3.1 TOLERANCES IN ANCHOR BOLT LOCATION

15.3.2 Column base

15.3.2.1 *Position in plan* The position in plan of a steel column base shall not deviate from its correct value by more than 6 mm along either of the principal setting out axes.

15.3.2.2 *Level* The level of the underside of a steel base plate shall not deviate from its correct value by more than ±10 mm.

Accessed by SWINBURNE UNIVERSITY OF TECHNOLOGY on 15 Aug 2007

@Seismicisolation

@Seismicisolation

15.3.2.3 *Full contact* If full contact is specified, the requirements of Clause 14.4.4.2 shall be satisfied, unless shims are used to reduce the measureable gaps to values specified in Clause 14.4.4.2.

Packs, shims and other supporting devices shall be flat and of the same steel grade as the member. If such packings are to be subsequently grouted, they shall be placed so that the grout totally encloses them with a minimum cover of 50 mm.

15.3.3 Plumbing of a compression member The alignment and plumbing of a compression member shall be in accordance with both of the following requirements:

(a) The deviation of any point above the base of the compression member from its correct position shall not exceed height/500 or as follows, whichever is the lesser:

(i) For a point up to 60 m above the base of the member . . . . . 25 mm.

(ii) For a point more than 60 m above the base of the member . . . . . 25 mm plus 1 mm for every 3 m in excess of 60 m up to a maximum of 50 mm.

(b) The deviation of the top of the compression member from its correct position relative to the bottom of the member from one storey to the next shall not exceed storey height/500.

15.3.4 Column splice A column splice shall conform to the following requirements:

(a) The level of the centre-line of a column splice shall not deviate from its correct level by more than ± 10 mm.

(b) The position in plan of a column splice shall be in accordance with the plumbing tolerances specified in Clause 15.3.3.

(c) The plan position of each spliced member relative to the other shall not deviate by more than 2 mm from its correct position along either of the principal setting-out axes.

15.3.5 Level and alignment of a beam In erecting a structure, a beam shall be deemed to be correctly positioned when—

(a) all connections including splices are completed;

(b) the maximum sweep in the beam is less than $l_b/500$, where l_b is the length between points of effective bracing or restraint;

(c) a beam is within ± 10 mm of its correct level at connections to other members; and

(d) a web of a beam is within ± 3 mm horizontally of its correct position at connections to other members.

15.3.6 Position of a tension member A tension member shall not deviate from its correct position relative to the members to which it is connected by more than 3 mm along any setting-out axis.

15.3.7 Overall building dimensions The overall building dimensions shall not deviate from the correct values by more than the following:

(a) Length (see Figure 15.3.7.1)

for $\Sigma l_c \leq 30$ m, $\Sigma \Delta l_c \leq \pm 20$ mm

for $\Sigma l_c > 30$ m, $\Sigma \Delta l_c \leq \pm \{20 \text{ mm} + 0.25(\Sigma l_c - 30) \text{ mm}\}$

(b) Height (see Figure 15.3.7.2)

for $\Sigma h_b \leq 30$ m, $\Sigma \Delta h_b \leq \pm 20$ mm

for $\Sigma h_b > 30$ m, $\Sigma \Delta h_b \leq \pm \{20 \text{ mm} + 0.25(\Sigma h_b - 30) \text{ mm}\}$

provided that—

(i) the distance between adjacent steel column centres (l_c) at every section does not deviate by more than ± 15 mm from the correct length;

Accessed by SWINBURNE UNIVERSITY OF TECHNOLOGY on 15 Aug 2007

@Seismicisolation

@Seismicisolation

(ii) the vertical distance between tops of beams (h_b) at every section does not deviate by more than ±20 mm from the correct values; and

(iii) all other tolerances in this Section are complied with.

For the purposes of this Clause—

Σl_c = the correct overall length of steelwork, being the centre-to-centre distance of the extreme columns as shown in Figure 15.3.7.1, at any location along the building, and

Σh_b = the correct overall height of steelwork, being the vertical distance from underside of column baseplate to the top of the finished floor level shown in Figure 15.3.7.2, at any location along the building.

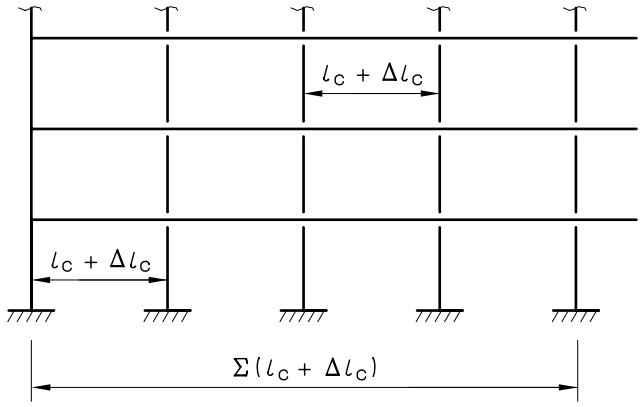

LEGEND:
l_c = Distance between columns
Δl_c = Deviation from l_c
Σl_c = Correct overall length of steelwork
$\Sigma \Delta l_c$ = Deviation from Σl_c

FIGURE 15.3.7.1 DEVIATIONS IN LENGTH (VERTICAL SECTION)

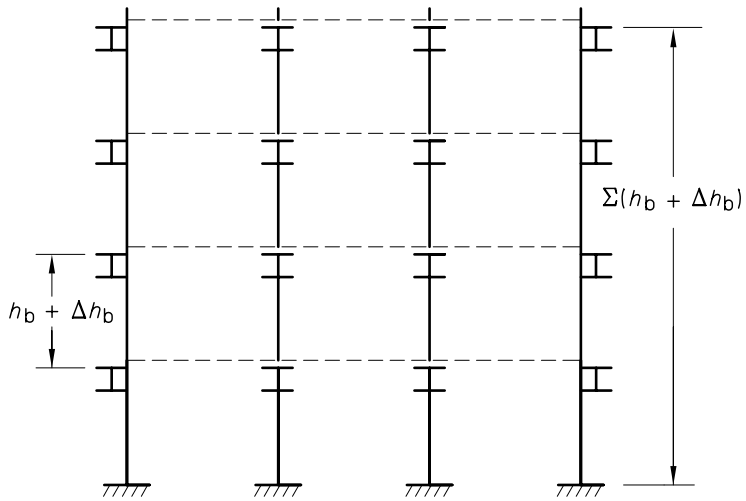

LEGEND:
h_b = Distance between tops of beams
Δh_b = Deviation from h_b
Σh_b = Correct overall height of steelwork
$\Sigma \Delta h_b$ = Deviation from Σh_b

FIGURE 15.3.7.2 DEVIATIONS IN HEIGHT (VERTICAL SECTION)

Accessed by SWINBURNE UNIVERSITY OF TECHNOLOGY on 15 Aug 2007

@Seismicisolation

@Seismicisolation

15.4 INSPECTION OF BOLTED CONNECTIONS

15.4.1 Tensioned bolts The methods of tensioning specified in Clause 15.2.5 shall comply with the following requirements:

(a) *Part-turn tensioning*—the correct part-turn from the snug-tight position shall be measured or observed.

(b) *Direct-tensioning indication device*—the minimum tension developed in the bolt shall be indicated directly by the device.

NOTES:

1 The manufacturer's recommendations for inspection procedures should be followed when using a direct-tensioning indication device.

2 The use of a torque wrench for inspection is considered suitable only to detect gross undertensioning. A procedure for such use is detailed in Appendix K.

15.4.2 Damaged items Bolts, nuts and washers which, on visual inspection, show any evidence of physical defects shall be removed and replaced by new items.

15.5 GROUTING AT SUPPORTS

15.5.1 Compression member base or beam Bedding under a compression member base plate or a bearing of a beam on masonry and concrete shall be provided by grout or mortar.

Grouting or packing shall not be carried out until a sufficient portion of the structure (for multistorey buildings, a sufficient number of bottom column lengths) has been aligned, levelled and plumbed and adequately braced by other structural members which have been levelled and are securely held by their permanent fastenings. Steel packing or levelling nuts on the anchor bolts shall be under the base plate to support the steelwork. The space under the steel shall be thoroughly cleaned and be free from moisture immediately before grouting.

15.5.2 Grouting Grout shall completely fill the space to be grouted and shall either be placed under pressure or placed by ramming against fixed supports.

Grout shall comply with AS 3600.

Accessed by SWINBURNE UNIVERSITY OF TECHNOLOGY on 15 Aug 2007

@Seismicisolation

@Seismicisolation

APPENDIX B
SUGGESTED DEFLECTION LIMITS
(Informative)

B1 SUGGESTED VERTICAL DEFLECTION LIMITS FOR BEAMS The vertical deflection of beams may be controlled using the suggested limits given in Table B1.

TABLE B1

SUGGESTED LIMITS ON CALCULATED VERTICAL DEFLECTIONS OF BEAMS

Type of beam	Deflection to be considered	Deflection limit (Δ) for span (l) (See Note 1)	Deflection limit (Δ) for cantilever (l) (See Note 2)
Beam supporting masonry partitions	The deflection which occurs after the addition or attachment of partitions	$\frac{\Delta}{l} \leq \frac{1}{500}$ where provision is made to minimize the effect of movement, otherwise $\frac{\Delta}{l} \leq \frac{1}{1000}$	$\frac{\Delta}{l} \leq \frac{1}{250}$ where provision is made to minimize the effect of movement, otherwise $\frac{\Delta}{l} \leq \frac{1}{500}$
All beams	The total deflection	$\frac{\Delta}{l} \leq \frac{1}{250}$	$\frac{\Delta}{l} \leq \frac{1}{125}$

NOTES:

1 Suggested deflection limits in this Table may not safeguard against ponding.

2 For cantilevers, the values of Δ/l given in this Table apply, provided that the effect of the rotation at the support is included in the calculation of Δ.

B2 SUGGESTED HORIZONTAL DEFLECTION LIMITS The relative horizontal deflection between adjacent frames at the eaves level of industrial buildings due to wind loads may be controlled by using the following suggested limits:

(a) Building clad in steel or aluminium sheeting without gantry cranes and without internal partitions against external walls . . . . . $\frac{\text{column height}}{150}$

(b) Building with masonry walls supported by steelwork . . . . . $\frac{\text{column height}}{240}$

Accessed by SWINBURNE UNIVERSITY OF TECHNOLOGY on 15 Aug 2007

@Seismicisolation

@Seismicisolation

APPENDIX G
BRACED MEMBER BUCKLING IN FRAMES
(Normative)

The member elastic flexural buckling load (N_{om}) of a braced compression member in a frame shall be determined as follows:

$$N_{om} = \frac{\pi^2 EI}{(k_e l)^2}$$

where k_e is the member effective length factor obtained from Figure 4.6.3.3(a) and the values of γ_1 and γ_2 for each restrained end of the compression member under consideration shall be calculated as the ratio of the stiffness of that member to the total stiffness of the braced members restraining that end as follows:

$$\gamma = \frac{\left(\frac{I}{l}\right)_m}{\sum \beta_e \alpha_{sr} \left(\frac{I}{l}\right)_r}$$

$(I/l)_m$ = stiffness in the plane of bending of the compression member under consideration

$\Sigma \beta_e \alpha_{sr} (I/l)_r$ = summation of the stiffnesses in the plane of bending of all the braced restraining members rigidly connected at that end to the member under consideration (except the member itself)

β_e = modifying factor given in Table 4.6.3.4 to account for the end conditions at the far end of the braced restraining member

α_{sr} = theoretical stability function multiplier, or the approximation shown in Figure G to account for the effect of the design axial force (N_r^*) in the braced restraining member on its flexural stiffness .

In Figure G, the value of ϱ is calculated as follows:

$$\varrho = \frac{N_r^*}{N_{olr}}$$

where

$$N_{olr} = \frac{\pi^2 EI_r}{l_r^2}$$

For a braced restraining member in tension, α_{sr} may conservatively be taken 1.0. Where a braced restraining member is connected by a detail with negligible moment transmitting capacity, the contribution of that member to the total stiffness shall be taken as zero.

Accessed by SWINBURNE UNIVERSITY OF TECHNOLOGY on 15 Aug 2007

@Seismicisolation

@Seismicisolation

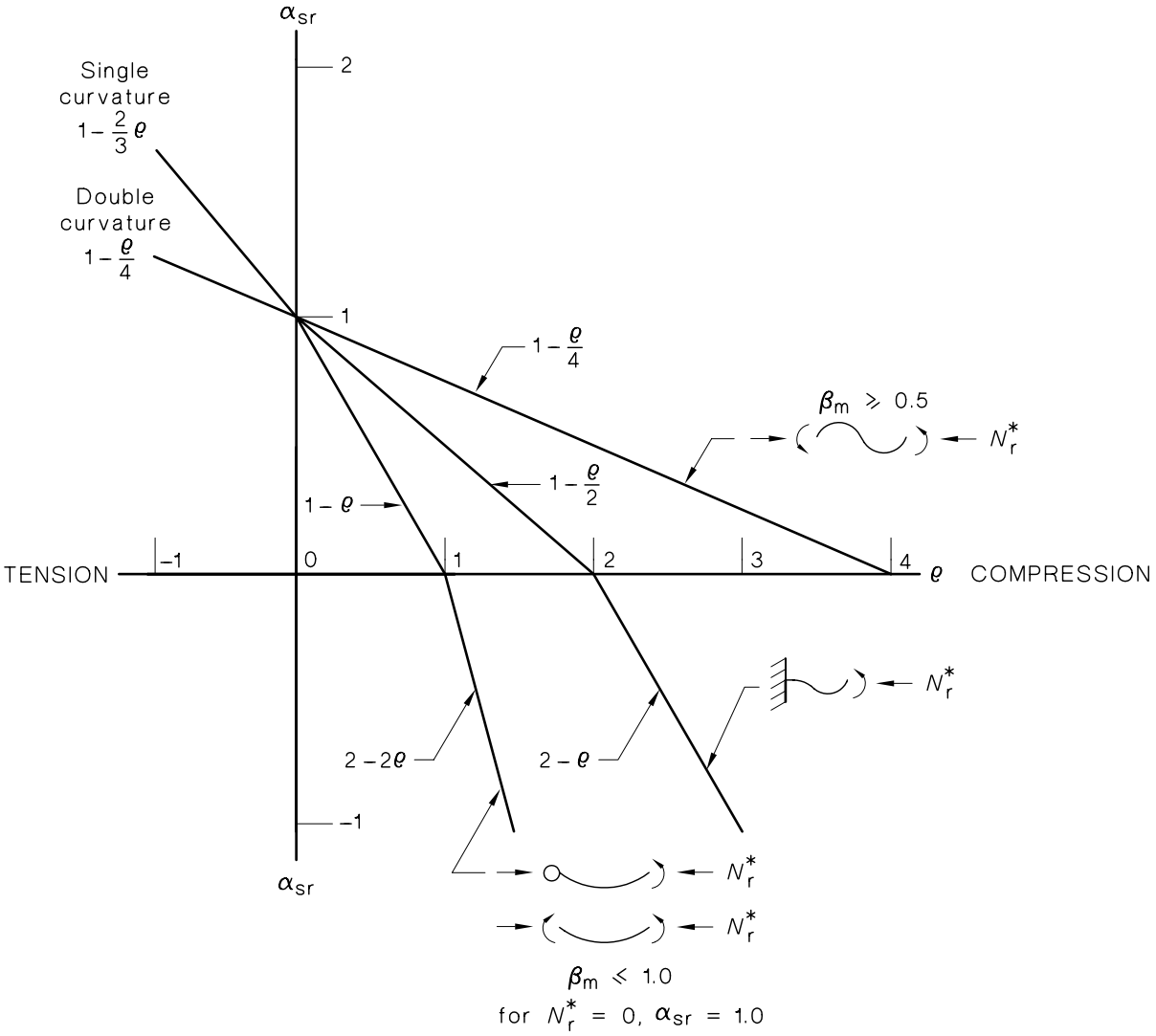

FIGURE G STABILITY FUNCTION MULTIPLIERS

Accessed by SWINBURNE UNIVERSITY OF TECHNOLOGY on 15 Aug 2007

@Seismicisolation

@Seismicisolation

APPENDIX H
ELASTIC RESISTANCE TO LATERAL BUCKLING
(Informative)

H1 GENERAL The elastic resistance of a beam to lateral buckling is influenced by many factors, including the beam geometry, the distribution of the loading on it, and the effects of end and intermediate restraints. Because of this, simple design rules can be formulated only for a limited number of situations. Such a set of simple rules is included in Clauses 5.6.1, 5.6.2 and 5.6.3.

While these rules are generally on the safe side, there are many situations where they are overly conservative. When it is desirable to avoid undue conservatism, then Clause 5.6.4 may be used, which requires the use of the results of an elastic flexural-torsional buckling analysis. This may be carried out by using computer programs such as those described in References 1 and 2.

Alternatively, the published results of elastic flexural-torsional buckling analyses may be used. There are very many such publications, either in textbooks and surveys such as those listed in References 3 to 7, or in research publications such as References 8 to 10.

However, it is often the case that suitable computer programs are not available, and that the designer is daunted by the complexity and scope of the research publications. In this case, it is desirable that there should be a second level of approximation, more general and more accurate than the provisions of Clauses 5.6.1, 5.6.2 and 5.6.3. Such a set of approximations is given in Paragraphs H2, H3 and H5. They may be used in conjunction with the method of design by buckling analysis of Clause 5.6.4.

H2 SEGMENTS RESTRAINED AT BOTH ENDS The effects of geometry and loading distribution on the elastic flexural-torsional buckling of a uniform equal flanged segment restrained at both ends may be estimated by calculating approximately the maximum bending moment (M_{ob}) in the segment at elastic buckling as follows:

$$M_{ob} = \alpha_m \alpha_l M_o \qquad \text{. . . H2(1)}$$

where

α_m is given in Clause 5.6.1.1(a), or may be approximated in accordance with Clause 5.6.4.

$$\alpha_l = \sqrt{\left\{1 + \left[\frac{0.4\alpha_m y_L}{M_o}\left(\frac{\pi^2 EI_y}{l^2}\right)\right]^2\right\}} + \left[\frac{0.4\alpha_m y_L}{M_o}\left(\frac{\pi^2 EI_y}{l^2}\right)\right] \qquad \text{. . . H2(2)}$$

M_o is given by Equation H4(2)

y_L = the distance of the gravity loading below the centroid (and is positive when the load acts below the centroid).

Alternatively, for uniform equal flanged segments loaded so that $-d_o/2 \le y_L \le d_o/2$, where d_o is the overall section depth of the segment, the amended elastic buckling moment (M_{oa}) used in Equation 5.6.1.1(2) may be taken as—

$$M_{oa} = M_o + \left[0.4\alpha_m y_L\left(\frac{\pi^2 EI_y}{l^2}\right)\right] \qquad \text{. . . H2(3)}$$

H3 SEGMENTS UNRESTRAINED AT ONE END The effects of geometry and loading distribution on the elastic flexural-torsional buckling of a uniform equal flanged segment unrestrained at one end and both fully or partially restrained and laterally continuous or restrained

Accessed by SWINBURNE UNIVERSITY OF TECHNOLOGY on 15 Aug 2007

@Seismicisolation

@Seismicisolation

against lateral rotation at the other end may be estimated by calculating the maximum bending moment (M_{ob}) in the segment at elastic buckling as follows:

$$M_{ob} = \alpha_{mc}\alpha_{lc}M_o \qquad \ldots \text{H3(1)}$$

where

$$\alpha_{mc} = \frac{(C_3 + C_4K)}{\pi\sqrt{(1 + K^2)}} \qquad \ldots \text{H3(2)}$$

$$\alpha_{lc} = 1 + \frac{\left(\frac{2y_L K}{d_f 2}\right)}{\sqrt{\left[1 + \left(\frac{2y_L K}{d_f 2}\right)^2\right]}} \qquad \ldots \text{H3(3)}$$

M_o is given by Equation H4(2)

K is given by Equation H4(3)

C_3, C_4 are given in Table H3.

The elastic flexural-torsional buckling of a uniform equal flanged segment, unrestrained at one end, and both fully or partially restrained and unrestrained against lateral rotation at the other end, may be estimated by calculating the maximum bending moment (M_{ob}) in the segment at elastic buckling by using C_4 equals 0 in Equation H3(2).

TABLE H3

FACTORS (C_3) AND (C_4) FOR BEAMS UNRESTRAINED AT ONE END

Beam segment	Moment distribution	Factor, C_3	Factor, C_4
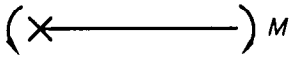		1.6	0.8
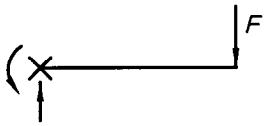	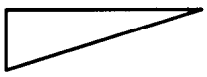	4.0	3.7
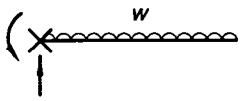	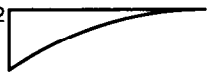	7.0	8.0

NOTE: × ≡ full or partial restraint

H4 REFERENCE ELASTIC BUCKLING MOMENT The elastic buckling moment (M_o) of a simply supported segment in uniform bending may be used as a reference moment.

This moment is calculated as follows:

$$M_o = \sqrt{\left(\frac{\pi^2 EI_y}{l^2}\right)}\left\{\sqrt{\left[GJ + \frac{\pi^2 EI_w}{l^2} + \left(\frac{\beta_x^2}{4}\,\frac{\pi^2 EI_y}{l^2}\right)\right]} + \frac{\beta_x}{2}\sqrt{\left(\frac{\pi^2 EI_y}{l^2}\right)}\right\} \qquad \ldots \text{H4(1)}$$

Accessed by SWINBURNE UNIVERSITY OF TECHNOLOGY on 15 Aug 2007

@Seismicisolation

@Seismicisolation

For sections bent about an axis of symmetry, β_x equals 0, and Equation H4(1) simplifies to—

$$M_o = \left(\frac{\pi\sqrt{(EI_yGJ)}}{l}\right)\sqrt{(1 + K^2)} \qquad \ldots \text{H4(2)}$$

where

$$K = \sqrt{\left(\frac{\pi^2 EI_w}{GJl^2}\right)} \qquad \ldots \text{H4(3)}$$

E = 200 000 MPa

$G \approx$ 80 000 MPa

$I_w = \dfrac{I_y(d_f)^2}{4}$ for doubly-symmetric I-section,

$= I_{cy}d_f^2\left(1 - \dfrac{I_{cy}}{I_y}\right)$ for a monosymmetric I-section,

$= \dfrac{b_f^3 t_f b_w^2}{48}\left(8 - \dfrac{3b_f t_f b_w^2}{I_x}\right)$ for a thin-walled channel section,

$= 0$ for an angle section, a tee-section, or a narrow rectangular section, and may be taken as 0 for a hollow section,

$J \approx \sum\left(\dfrac{b\,t^3}{3}\right)$ for an open section,

$\approx \dfrac{4A_e^2}{\sum\left(\frac{b}{t}\right)}$ for a hollow section where A_e is the area enclosed by the hollow section,

$$\beta_x = \frac{1}{I_x}\int(x^2y + y^3)\mathrm{d}A - 2y_o$$

$\approx 0.8d_f\left(\dfrac{2I_{cy}}{I_y} - 1\right)$ for a monosymmetric I-section.

Expressions for the properties of other thin-walled sections are given in Reference 11, while more accurate approximations for J are given in Reference 12.

H5 EFFECTS OF END RESTRAINTS

H5.1 Torsional end restraints The approximations given in Paragraphs H2 and H3 for the elastic buckling moments are for segments which are rigidly restrained torsionally at their supports against twist rotations. When the torsional end restraints are elastic, the buckling twists increase, and the resistance to buckling decreases. The decreased resistance (M_{obr}) may be approximated as follows:

$$M_{obr} = M_{ob}\sqrt{\left[\frac{2\beta_t}{(1 + \beta_t)}\right]} \le M_{ob}$$

in which β_t depends on the elastic stiffness (α_{rz}) of the torsional end restraint (i.e. the ratio of the restraining torque supplied to the twist rotation).

For segments restrained at both ends—

$$\beta_t \approx \frac{\alpha_{rz}l/GJ}{5(1 + K^2)}$$

Accessed by SWINBURNE UNIVERSITY OF TECHNOLOGY on 15 Aug 2007

@Seismicisolation

@Seismicisolation

For segments unrestrained at one end and both fully or partially restrained and laterally continuous or restrained against lateral rotation at the other end—

$$\beta_t \approx \frac{\alpha_{rz} l / GJ}{25(1 + 2K^2)/(1 + K^2)}$$

and for segments unrestrained at one end and both fully or partially restrained and unrestrained against lateral rotation at the other end—

$$\beta_t \approx \frac{\alpha_{rz} l / GJ}{5(1 + 2K^2)/(1 + K^2)}$$

H5.2 End restraints against lateral rotation

H5.2.1 Segments restrained at both ends Continuity of a segment with adjacent segments may introduce restraining moments which reduce the lateral rotations and increase the elastic buckling moment. The restraint effects depend on the relative minor axis flexural stiffnesses of the adjacent segments, and these depend in turn on the moment distributions in these segments. The restraining effects may be calculated approximately by using the method referred to in References 6 and 9 to calculate the effective length (l_e), and by using l_e instead of the segment length (l) in Equations H4(2) and H4(3).

H5.2.2 Segments unrestrained at one end The approximate elastic buckling moments obtained by using the values of C_3 and C_4 of Table H3 in Equations H4(1) to H4(3) are for segments which are prevented from rotating laterally at their restrained ends. For segments which are unrestrained against lateral rotation at their restrained ends, the values of C_4 used in Equation H3(2) should be reduced to zero. For a segment with an elastic restraint against lateral rotation at its restrained end, a reduced value C_{4r} should be used which may be approximated as follows:

$$\frac{C_{4r}}{C_4} = \frac{1.5\alpha_{ry} l / EI_y}{5 + (\alpha_{ry} l / EI_y)} \leq 1.0$$

in which α_{ry} is the elastic stiffness of the flexural end restraint (i.e. the ratio of the restraining minor axis moment supplied to the end lateral rotation).

H6 REFERENCES

1 BARSOUM, R.S., and GALLAGHER, R.S., Finite element analysis of torsional and torsional flexural stability problems. *International Journal for Numerical Methods in Engineering*, Vol. 2, 1970, pp. 335-352.

2 HANCOCK, G.J., and TRAHAIR, N.S., Finite element lateral buckling of continuously restrained beam-columns. *Civil Engineering Transactions*, Institution of Engineers, Australia, Vol. CE20, No. 2, 1978, pp. 120-127.

3 TIMOSHENKO, S.P., and GERE, J.M. *Theory of elastic stability.* 2nd ed., McGraw-Hill, New York, 1961.

4 COLUMN RESEARCH COMMITTEE OF JAPAN. *Handbook of structural stability.* Corona, Tokyo, 1971.

5 STRUCTURAL STABILITY RESEARCH COUNCIL. *Guide to stability design criteria for metal structures*. 4th ed., Ed. T.V. Galambos, John Wiley and Sons, New York, 1988.

6 TRAHAIR, N.S., and BRADFORD, M.A. *The behaviour and design of steel structures*. 2nd ed., Chapman and Hall, London, 1988.

7 NETHERCOT, D.A. Elastic lateral buckling of beams. Chapter 1 in *Developments in the stability and strength of structures. Vol. 2, Beams and beam-columns*. Applied Science Publishers, London, 1983, pp. 1-33.

8 NETHERCOT, D.A., and ROCKEY, K.C. A unified approach to the elastic lateral buckling of beams. *The Structural Engineer*, Vol. 49, No. 7, July 1971, pp. 321-330.

Accessed by SWINBURNE UNIVERSITY OF TECHNOLOGY on 15 Aug 2007

@Seismicisolation

@Seismicisolation

9 NETHERCOT, D.A., and TRAHAIR, N.S. Lateral buckling approximations for elastic beams. *The Structural Engineer*, Vol. 54, No. 6, June 1976, pp. 197-204.

10 TRAHAIR, N.S. Lateral buckling of overhanging beams. *Instability and Plastic Collapse of Steel Structures*. Ed. L.J. Morris, Granada, London, 1983, pp. 503-518.

11 BRIDGE, R.O., and TRAHAIR, N.S. Bending, shear, and torsion of thin-walled beams. *Steel Construction*, Australian Institute of Steel Construction, Vol. 15, No. 1, 1981, pp. 2-18.

12 EL DARWISH, I.A., and JOHNSTON, B.G. Torsion of structural shapes. *Journal of the Structural Division*, ASCE, Vol. 91, No. ST1, 1965, pp. 203-227.

Accessed by SWINBURNE UNIVERSITY OF TECHNOLOGY on 15 Aug 2007

@Seismicisolation

@Seismicisolation

APPENDIX I
STRENGTH OF STIFFENED WEB PANELS UNDER COMBINED ACTIONS
(Informative)

I1 YIELDING CHECK The design bending, shear, axial and bearing actions (or reactions) (M_w^*), (V_w^*), (N_w^*) and (R_w^*) on a web panel (see Figure I1) should satisfy the yielding criterion—

$$\left(\frac{R_w^*}{\phi b_{bf} t_w}\right)^2 - \frac{f_w^*}{\phi}\left(\frac{R_w^*}{\phi b_{bf} t_w}\right) + \left(\frac{f_w^*}{\phi}\right)^2 + \left(\frac{V_w^*}{0.6\phi A_w}\right)^2 \leq (f_y)^2$$

where

$$f_w^* = \frac{N_w^*}{A_w} + \left(0.77\frac{M_w^*}{Z_{we}}\right)$$

b_{bf} = width of the bearing load on the edge of the web dispersed at 2.5:1 through the flange as shown in Figure 5.13.1(1)

M_w^* = design bending moment in the web, calculated by elastic theory for sections with non-compact or slender flanges (see Clause 5.2), or by plastic theory for sections with compact flanges (see Clause 5.2)

Z_{we} = elastic section modulus of the web panel

$$= \frac{t_w (d_p)^2}{6}$$

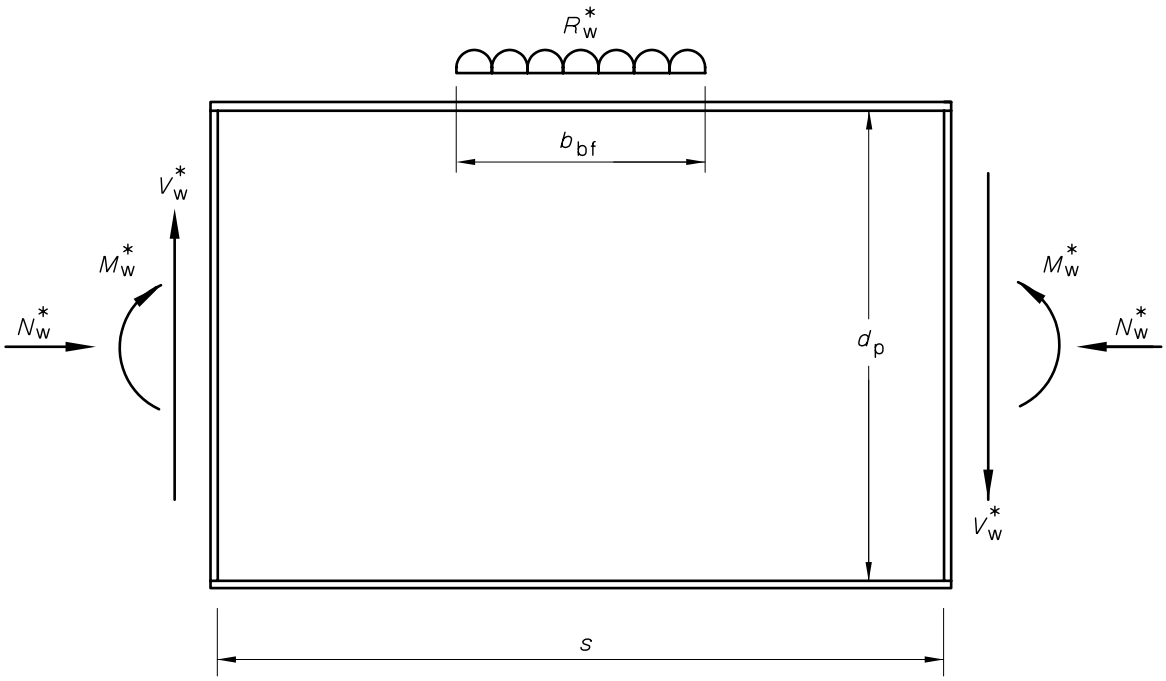

FIGURE I1 ACTIONS ON WEB PANEL

Accessed by SWINBURNE UNIVERSITY OF TECHNOLOGY on 15 Aug 2007

@Seismicisolation

@Seismicisolation

I2 BUCKLING CHECK The design bending, shear, axial and bearing actions (or reactions) (M_w^*), (V_w^*), (N_w^*) and (R_w^*) on a web panel should satisfy the buckling criterion—

$$\left(\frac{R_w^*}{\phi R_{sb}}\right) + \left(\frac{N_w^*}{\phi N_{wo}}\right) + \left(\frac{V_w^*}{\phi V_v}\right)^2 + \left(\frac{M_w^*}{\phi M_w}\right)^2 \leq 1$$

where

N_{wo} = nominal axial load capacity of the web panel if the web panel resisted axial load alone

$$= \frac{45 A_w f_y}{\left(\frac{d_p}{t_w}\right)\sqrt{\left(\frac{f_y}{250}\right)}} \leq A_w f_y$$

V_v = nominal shear capacity of the web panel if the web panel resisted shear alone, as specified in Clause 5.11

M_w = nominal section moment capacity of the web if the web resisted bending alone, as specified in Clause 5.2

R_{sb} = nominal buckling capacity of a transversely stiffened web in bearing alone

$= ß_w b_{bf} t_w f_y$

$$ß_w = 0.10 + \frac{20}{\left(\frac{d_e}{t_w}\right)\sqrt{\left(\frac{f_y}{250}\right)}}$$

$$d_e = \frac{1.9\sqrt{(b_{bf} d_p)}}{\alpha_w}$$

$$\alpha_w = \left[3.4 + \left(\frac{2.2 d_p}{s}\right)\right]\left[0.4 + \left(\frac{0.5 b_{bf}}{s}\right)\right]$$

Accessed by SWINBURNE UNIVERSITY OF TECHNOLOGY on 15 Aug 2007

@Seismicisolation

@Seismicisolation

CHAPTER 3

TIMBER STRUCTURES—DESIGN METHODS

This Chapter consists of edited extracts from AS 1720.1—1997, *Timber structures*, Part 1: *Design methods*. The extract incorporates Amendments No. 1 (July 1998), No. 2 (May 2000), No. 3 (May 2001) and No. 4 (November 2002).

AS 1720.1 sets out limit state design methods for the structural use of timber and intended for use in the design or appraisal of structural elements or systems comprised of timber or wood products and of structures comprised substantially of timber.

Accessed by SWINBURNE UNIVERSITY OF TECHNOLOGY on 15 Aug 2007

@Seismicisolation

@Seismicisolation

STANDARDS AUSTRALIA

Australian Standard

Timber structures

Part 2: Design methods

SECTION 1 SCOPE AND GENERAL

1.1 SCOPE AND APPLICATION

1.1.1 Scope

This Standard sets out limit state design methods for the structural use of timber which are based on the principles of structural mechanics and on data established by research. The Standard is intended for use in the design or appraisal of structural elements or systems comprised of timber or wood products and of structures comprised substantially of timber. To this end, the Standard provides design data for sawn timber, laminated timber, timber in pole form, plywood, laminated veneer lumber and various types of fastenings. In addition, it provides methods of test for components or assemblies of unconventional design which may not be readily amenable to detailed analysis.

For ease of use, the simpler design situations are covered in the main body of the text. Related appendices, which form an integral part of the Standard, give acceptable procedures for detailed design situations.

1.1.2 Application

This Standard will be referenced in the Building Code of Australia by way of BCA Amendment 3 to be published by 1 July 1998, thereby superseding the previous edition, AS 1720.1—1988, which will be withdrawn 12 months from the date of publication of this edition.

1.2 REFERENCED DOCUMENTS

A list of documents referred to in this Standard is given in Appendix A.

1.3 NEW MATERIALS AND METHODS

This Standard shall not be interpreted to prevent the use of material or of methods of design or construction not specifically referred to herein. Methods of design can be based on analytical and engineering principles, or reliable test data, or both, that demonstrate the safety and serviceability of the resulting structure for the purpose intended. The classification of timbers into strength groups (see Clause 1.4) or their grouping for joint design (see Clause 4.1) shall not be interpreted as precluding the use of design data derived on the basis of authoritative research information for a particular timber product or grade of timber. Such research shall include consideration of both short-term and long-term strength and stiffness properties, durability of adhesives and applicability to this Standard of the data or test methods used.

Reports containing complete information on the basis for the use of any new materials or methods of design shall be made available.

NOTE: It usually will be necessary to seek approval from the relevant building authority or other appropriate regulatory authority for the use of other materials or methods.

Accessed by SWINBURNE UNIVERSITY OF TECHNOLOGY on 15 Aug 2007

@Seismicisolation

@Seismicisolation

1.4 TIMBER

1.4.1 General

All timber used in accordance with this Standard shall comply with the requirements of the appropriate Australian Standards, as follows:

(a) *Visually graded sawn timber* Visually graded sawn timber shall conform to the requirements of AS 2082 and AS 2858.

(b) *Mechanically graded timber* Mechanically graded timber shall conform to the requirements of AS 1748.

(c) *Proof graded timber* Proof graded timber shall conform to the requirements of AS 3519.

(d) *Structural plywood* Structural plywood shall conform to the requirements of AS/NZS 2269.

(e) *Laminated veneer lumber* Laminated veneer lumber shall conform to the requirements of AS/NZS 4357.

(f) *Glued laminated timber* Glued laminated timber shall conform to the requirements of AS/NZS 1328.

(g) *Round timber* Round timber shall conform to the requirements of AS 2209.

1.4.2 Identification

Structural timber used in conjunction with this Standard shall have its stress grade identified in accordance with the relevant Australian timber product Standard given in Clause 1.4.1.

For many purposes it may also be necessary to specify a particular species. When a particular species is specified the specification shall require that all pieces of timber be suitably identified as to species.

NOTES:

1 The design properties recommended in this Standard have been chosen on the assumption that structures of unseasoned timber that are allowed to dry will not receive their full design load until a period of air drying for at least 2 weeks has taken place. Freshly sawn timber which is unseasoned, or has recently been treated with waterborne chemicals, tends to have a reduced resistance and stiffness to sustained loads during the initial drying period. Under normal circumstances unseasoned timber will have had this drying period before being subjected to its full design load.

2 Usually, only a limited number of the timber species and stress grades listed in this Standard will be readily available at any particular place and time.

1.4.3 Change of grade

The strength properties of graded timber or timber products may alter as a consequence of subsequent processes such as longitudinal resawing, chemical treatments and redrying processes. Hence, it may be necessary to reassess strength properties to ensure that graded timber or timber products still satisfy design requirements after having been subjected to such processes.

1.4.4 Special provisions

Design loads for timber joints and design rules for notched beams given herein are based on the assumption that there are no loose knots, severe sloping grain, gum veins, gum or rot pockets, lyctus-susceptible sapwood, holes or splits in the vicinity of any fasteners or notch roots.

Accessed by SWINBURNE UNIVERSITY OF TECHNOLOGY on 15 Aug 2007

@Seismicisolation

@Seismicisolation

1.4.5 Treated timber

Timber, treated by impregnation with waterborne chemicals such as preservatives, is classified as unseasoned timber unless seasoning is specified.

NOTE: Where the material is reseasoned, regrading will normally be required.

1.5 GENERAL DESIGN CONSIDERATIONS

1.5.1 Loads

1.5.1.1 *General*

A structure and its structural elements shall be designed to resist the design action effect produced by—

(a) the design loads for strength, stability and serviceability limit states as specified in AS/NZS 1170.0; or

(b) such other design loads deemed to be acceptable for the limit state as appropriate to the intended end-use service conditions of a structure or its structural elements.

1.5.1.2 *Duration of load*

Duration of load effects needs to be considered in the determination of the critical combination of loads. For definition of duration of loading refer to Clause 1.8.2.12 and for further information Clause 2.4.1.

1.5.2 Design methods

1.5.2.1 *General*

A structure and its structural elements shall be designed to resist the design action effects produced by the design loads so as to satisfy the requirement for strength, stability and serviceability limit states.

1.5.2.2 *Strength limit state*

This limit state condition shall be deemed to be satisfied when the structural elements of a structure are proportioned so that their design capacities, (ϕR), equal or exceed the design load effects, S^*. For a given failure mode the strength limit state takes the general form—

$$(\phi R) \geq S^*$$

where

(ϕR) = design capacity of a structural element determined in accordance with the relevant Sections of this Standard. The general requirements are given in Section 2

S^* = design action effect, such as bending moments, axial loads and shear forces produced by the design loads for strength limit states.

NOTE: The design capacity, (ϕR), of a structural element is also referred to as the factored resistance of the structural element for a given failure mode.

1.5.2.3 *Stability limit state*

The structure as a whole (or any part of it) shall be designed to prevent instability due to overturning, uplift or sliding as follows:

(a) The design effect and the design resistance effect shall be determined in accordance with AS/NZS 1170.0.

(b) The whole or part of the structure shall be proportioned so that the design resistance effect is not less than the design action effect.

Accessed by SWINBURNE UNIVERSITY OF TECHNOLOGY on 15 Aug 2007

@Seismicisolation

@Seismicisolation

1.5.2.4 *Serviceability limit state*

The structure and its structural elements shall be designed to give satisfactory performance under the specified service conditions by controlling or limiting deflections, vibration and displacement of fasteners as follows:

(a) The load combinations for serviceability limit states shall, unless otherwise agreed, be in accordance with AS/NZS 1170.0.

(b) Deflections due to design loads appropriate to the serviceability limit state shall be determined by elastic analysis methods.

NOTES:

1 The deflection limits for the serviceability limit state should be appropriate to the structure and its intended use, the nature of loading, the relationship between adjacent members and the effect on other elements supported.

2 Guidance on selection of deflection limits is given in Appendix B.

3 The determination of acceptable deflection limits is part of the design process performed by the design engineer.

4 The characteristic modulus of elasticity values given in this Standard are mean values only and accordingly deflection of individual members subjected to the design loads may vary both above and below the calculated estimate. Where deflection must not exceed a specific allowance then it is suggested that lower fifth percentile estimates of modulus of elasticity should be obtained and used.

A procedure for estimating lower fifth percentile values of modulus of elasticity is given in Appendix B.

(c) Where required, structures shall be designed to ensure that the vibration induced by machinery, or vehicular or pedestrian traffic does not adversely affect the serviceability of the structure.

NOTES:

1 Where there is likelihood of a structure being subjected to vibration effects, measures should be taken to minimize any dynamic behaviour so as to prevent possible discomfort or alarm, damage to the structure, or interference with its proper function.

2 AS 2670 gives guidance to the evaluation of human exposure to whole-body vibrations of the type likely to be transmitted by structures.

(d) Where required, the displacement associated with various types of fasteners shall be assessed in accordance with the methods given in Appendix C.

1.5.2.5 *Experimentally based design*

Where a structure or a structural element is demonstrated by the full-scale tests specified in Appendix D to satisfy requirements for strength, deformation, stability and serviceability, the corresponding design requirements of this Standard shall also be deemed to have been satisfied. Other design considerations will still be required to be met.

1.5.3 Timber dimensions for engineering calculations

All engineering calculations shall be based on the actual cross-section. Such calculations shall not be based on the nominal cross-section.

NOTE: Nominal cross-section is sometimes referred to as ‘called’ cross-section.

1.5.4 Other design considerations

1.5.4.1 *Buckling restraints*

Where there may be some doubt as to the effectiveness of buckling restraints, appropriate computations, such as those indicated in Appendix E, shall be made to check the stiffness and strength of the restraints.

Accessed by SWINBURNE UNIVERSITY OF TECHNOLOGY on 15 Aug 2007

@Seismicisolation

@Seismicisolation

1.5.4.2 *Erection and other extraneous forces*

Adequate provision shall be made to resist the lateral and other forces that can occur during the transport of structural elements, and during the erection of a structure.

1.5.4.3 *Secondary stresses*

Careful consideration shall be given to the influence of secondary stresses. Where these cannot be reduced to negligible proportions, suitable provisions in the design or some reduction in permissible primary stresses shall be made.

1.5.4.4 *Shrinkage*

When using unseasoned timber, consideration shall be given to the effects of shrinkage. Detailing of the joints shall not restrain shrinkage where splitting could render the joint ineffective. Consideration shall also be given to detailing to avoid damage or unsightly appearances.

NOTE: For most timbers the magnitude of shrinkage is in the range of 0.1 percent to 0.3 percent in the direction of the wood grain and 2 percent to 10 percent transverse to this direction. Information on shrinkage for specific species can be obtained from the following:

(a) KINGSTON, R.S.T. and RISDON C.J.E. *Shrinkage and Density of Australian and Other South-west Pacific Woods*. Division of Forest Products Technological Paper No. 13, CSIRO, 1961.

(b) BUDGEN, B. *Shrinkage and Density of some Australian and South-east Asian Timbers*. Division of Building Research Technological Paper (Second Series) No. 38, CSIRO, 1981.

1.5.4.5 *Durability*

The structure and its structural elements, including timber, metal, adhesives and any other structural material, shall be designed and any assumed maintenance program specified in order to satisfy strength, stability and serviceability requirements for the design life of the structure. Due consideration shall be given to environmental conditions, such as the thermal, physical, chemical, mechanical and biological agents which may act on the structure to reduce its performance characteristics.

NOTES:

1 Generally, timber under cover and in well-ventilated conditions and not in contact with the ground or free water, is not subject to fungal attack. However, such timber may be subject to termite attack and to attack by other insects in parts of Australia. If conditions favourable for biological attack exist, then steps should be taken to eliminate the hazards. This is particularly important in structures where there is no load-sharing capacity, or there is a high consequence of failure.

2 Information on the durability design of timber structures and components thereof can be obtained from the following:

(a) All agents:

Design for Durability, Datafile P4, National Association of Forest Industries Timber Manual

G.R. STRINGER, *The Development of Reliability Based Durability Design Methods for Timber Structures*, Gottstein Report 1994

(b) Thermal agents: Fire—AS 1720.4

(c) Biological agents:

Subterranean termites—AS 3660

Marine organisms—CSIRO, Marine Borers and Timber Piling Options

Insects and Fungi—AS 1604

(d) Timber for houses:

Timber Framing Code—AS 1684

State timber framing manuals

(e) Metal Connectors: Corrosion—AS 4100

Accessed by SWINBURNE UNIVERSITY OF TECHNOLOGY on 15 Aug 2007

@Seismicisolation

@Seismicisolation

(f) Timber Adhesives: AS 2754

1.6 DESIGN AND SUPERVISION

1.6.1 Design

The design of timber structures to which this Standard applies, including the specification of materials and any protective treatment, shall be carried out in accordance with the requirements of this Standard.

1.6.2 Design information

The following information appropriate to the design shall be shown on the drawings:

(a) Reference number and date of the Standards used in the design.

(b) Dead, live, wind, snow and earthquake loads used in design.

(c) Strength group, joint group, stress grade and grading Standard used for design.

(d) Species or group of species of timber or plywood to be used.

(e) In-service moisture and temperature regime for which the structure has been designed.

(f) Protective treatment, if applicable.

(g) Fire-resistance rating, if applicable.

(h) Type of glue, if applicable.

(i) Standard of inspection to be employed during construction.

(j) Any other information that is critical to design.

1.6.3 Design details

The drawings and specification shall include the following, where appropriate:

(a) Size, characteristic strength and moisture content of each member.

(b) Dimensioned details of all joints, connections and splices and their locations.

(c) Sizes and types of fasteners.

(d) Camber in any member.

(e) Any constraint on construction assumed in design.

(f) Surface finish of any member.

(g) Any special maintenance requirements.

(h) Any other requirements.

1.6.4 Supervision

The fabrication and erection of the timber structures or the parts of structures to which this Standard applies shall be supervised to ensure that all of the requirements of the design are satisfied in the completed structure.

1.7 WORKMANSHIP AND MAINTENANCE

1.7.1 General

The requirements of the designer as specified in the design documents shall be satisfied in the completed structure during its service life.

Accessed by SWINBURNE UNIVERSITY OF TECHNOLOGY on 15 Aug 2007

@Seismicisolation

@Seismicisolation

1.7.2 Moisture content

When structures or elements are to be fabricated with seasoned timber in situations where dimensional stability is critical, the designer of the structure shall ascertain the average equilibrium moisture content for the environment in which the structures or elements are to be erected, and shall specify that each piece of timber used shall have an average moisture content at the time of fabrication that is within 3 percent of the equilibrium value.

NOTE: Information on equilibrium moisture content values in timbers located in Australia can be obtained from the following references:

(a) FINIGHAN, R. *Moisture Content Predictions for Eight Seasoned Timbers under Sheltered Outdoor Conditions in Australia* and New Guinea. Division of Forest Products Technological Paper No. 44, CSIRO, 1966.

(b) BRAGG, C. *An Equilibrium Moisture Content Survey of Timber in Queensland*. Queensland Department of Forestry Technical Paper No. 40, QFD, 1986.

(c) BRENNAN G.K. and PITCHER J.A. *Equilibrium Moisture Content Variation of Timbers commonly used in Western Australia*. CALM Science Volume 2 No. 1 p.25-50, 1995.

1.7.3 Corrosion

The designer of the structure shall take due account of any possible corrosive effects on metal connectors or fasteners.

NOTE: Information on the protection of steel can be obtained from AS/NZS 2312.

1.7.4 Shop drawings

Where specified, shop drawings shall be prepared for structural members.

1.7.5 Fabrication and erection

The structure shall be fabricated and erected in accordance with the designer's instructions.

1.7.6 Maintenance

The structure shall be maintained during its service life in a condition which satisfies the designer's requirements as specified in the design documents.

1.8 DEFINITIONS

For the purpose of this Standard, the definitions given in AS/NZS 4491 and those below apply. Where the definitions in AS/NZS 4491 differ from those listed here those in this Standard will apply.

1.8.1 Administrative definitions

1.8.1.1 *Building authority or other regulatory authority*

Body having statutory powers to control the design and erection of buildings or structures, including scaffolding, in the area in which the building or structure concerned is to be erected.

1.8.1.2 *Professional engineer*

A person who is—

(a) if legislation is applicable, a registered *professional engineer* in the relevant discipline, who has appropriate experience and competence in the relevant field; or

(b) if legislation is not applicable—

(i) a Corporate Member of the Institution of Engineers Australia or the Institution of Professional Engineers New Zealand; or

(ii) eligible to become a Corporate Member of the Institution of Engineers Australia or the Institution of Professional Engineers New Zealand and has appropriate experience and competence in the relevant field.

Accessed by SWINBURNE UNIVERSITY OF TECHNOLOGY on 15 Aug 2007

@Seismicisolation

@Seismicisolation

1.8.2 Technical definitions

1.8.2.1 *Capacity factor*

A factor used to multiply the nominal capacity to obtain the design capacity.

1.8.2.2 *Characteristic, strength-reducing*

Any natural variation, damage, missing fibre, irregularity or similar occurring in the timber or wood product which may affect the appearance, strength, durability or utility of the material in use.

1.8.2.3 *Characteristic strength*

The value of a specified design property for use in the calculation of the design capacity of a structural element.

1.8.2.4 *Collapse-susceptible timber*

Timber for which the shrinkage values before and after reconditioning differ by more than 2 percent.

NOTE: Information on shrinkage values can be obtained from the following references:

(a) KINGSTON, R.S.T. and RISDON C.J.E. *Shrinkage and Density of Australian and Other South-west Pacific Woods*. Division of Forest Products Technological Paper No. 13, CSIRO, 1961.

(b) BUDGEN, B. *Shrinkage and Density of some Australian and South-east Asian Timbers*. Division of Building Research Technological Paper (Second Series) No. 38, CSIRO, 1981.

1.8.2.5 *Continuous monitoring*

Monitoring of one or more characteristic properties and proven parameters that is intended to ensure that the production module (daily, shift or batch) conforms to the product specification. Continuous monitoring is complementary to periodic monitoring.

1.8.2.6 *Corewood*

Timber adjacent to or including the pith, that is of density less than 80 percent that of the density of mature trees.

NOTE: For plantation grown softwoods, corewood may be avoided by excluding all timber within a radius of 50 mm from the centre of the pith, that has a growth ring width greater than 6 mm.

1.8.2.7 *Design action effect or design load effect*

The action or load effect computed from the design actions or design loads.

1.8.2.8 *Design action or design load*

The combination of the nominal actions or loads and the load factors, as specified in AS/NZS 1170.0.

1.8.2.9 *Design capacity*

The product of the nominal capacity and the capacity factor of a structural element.

1.8.2.10 *Design life*

Period over which a structure or structural element is required to perform its function without repair.

1.8.2.11 *Design resistance effect*

The resistance effect computed from the loads and design capacities contributing towards the stability limit state resistance.

1.8.2.12 *Duration of loading*

Period during which a member, a structural element or a complete structure is subject to a specified load level.

Accessed by SWINBURNE UNIVERSITY OF TECHNOLOGY on 15 Aug 2007

@Seismicisolation

@Seismicisolation

NOTES:

1 For the purposes of interpretation in the use of load-duration factors in this Standard, see Clause 2.5.1.

2 The strength and stiffness properties of timber under load are time dependent.

1.8.2.13 *F-grade*

A stress grade of timber for which the specific suite of design properties given in Table 2.4 are applicable.

NOTE: F-grades may be assigned to graded timber in accordance with the appropriate grading Standard, i.e. AS 2082, AS 2858, AS/NZS 1748 or AS 3519.

1.8.2.14 *Hardwood*

A wood from trees classified botanically as *Angiosperm*.

NOTES:

1 Although the term 'hardwood' is popularly interpreted to indicate the relative hardness of the wood, this interpretation is misleading as the wood of many hardwoods is relatively soft e.g. balsa wood.

2 The structural difference between hardwoods and softwoods is that hardwoods have vessels or pores and softwoods do not, that is, the wood of softwoods is non-pored.

1.8.2.15 *In-grade evaluation*

The testing of stress-graded, full size, structural timber according to AS/NZS 4063 to obtain an evaluation of the characteristic strength properties.

1.8.2.16 *Joint group*

The classification assigned to a timber species or species group for the purpose of calculating joint capacity.

NOTES:

1 Unseasoned timber species or species groups are classified into six joint groups, i.e. J1 to J6. Seasoned timber species or species groups are classified into six joint groups, i.e. JD1 to JD6.

2 The joint group classifications for a range of timber species or species groups are given in Tables 2.1 and 2.2 for hardwoods and softwoods respectively.

1.8.2.17 *Limit state*

Any limiting condition beyond which the structure ceases to fulfil its intended function.

1.8.2.18 *Nominal capacity*

The capacity of a structural element computed using the parameters specified in this Standard (see Clause 1.8.2.9).

1.8.2.19 *Periodic monitoring*

A testing program in which material being produced from an in-grade tested population is monitored to ensure that its characteristic properties do not drift away from the initially determined values. Periodic monitoring is complementary to continuous monitoring.

1.8.2.20 *Primary structural element*

Members and joints whose failure could result in collapse of a structure.

1.8.2.21 *Proof testing*

Application of test loads to a structure or element to ascertain the structural characteristics of only that one unit under test.

1.8.2.22 *Prototype testing*

Application of test loads to a structure or element to ascertain the structural characteristics of structures or elements which are nominally identical to the unit or units tested.

Accessed by SWINBURNE UNIVERSITY OF TECHNOLOGY on 15 Aug 2007

@Seismicisolation

@Seismicisolation

1.8.2.23 *Seasoned timber*

Timber in which the average moisture content is brought to a specified range, nominally between 10 and 15 percent with a small variation depending on where the timber is to be used.

NOTE: Seasoned timber is sometimes referred to as 'dry', 'air-dried' or 'kiln dried' timber.

1.8.2.24 *Secondary structural elements*

Members and joints whose failure would not result in collapse of a structure.

1.8.2.25 *Serviceability limit state*

A limit state of acceptable in-service condition.

1.8.2.26 *Softwood*

Wood from trees classified botanically as *Gymnosperm*.

NOTES:

1 Although the term 'softwood' is popularly interpreted to indicate the relative softness of the wood, this interpretation is misleading as the wood of many softwoods can be relatively hard e.g. cypress pine.

2 Commercial species of this group are nearly always conifers.

1.8.2.27 *Stability limit state*

A limit state corresponding to the loss of static equilibrium of a structure considered as a rigid body.

1.8.2.28 *Strength group*

The classification assigned to a timber species or species group for the purposes of calculating member capacity.

NOTES:

1 Unseasoned timber species or species groups are classified into seven strength groups, i.e. S1 to S7. Seasoned timber species or species groups are classified into eight strength groups, i.e. SD1 to SD8.

2 The strength group classifications for a range of timber species or species groups are given in Tables 2.1 and 2.2 for hardwoods and softwoods respectively.

3 Procedures for assigning species to strength group classifications are given in AS 2878.

1.8.2.29 *Strength limit state*

A limit state of collapse or loss of structural integrity.

1.8.2.30 *Stress grade*

A suite of design properties applicable to a particular reference population.

NOTES:

1 Typical examples of stress grades are—

(a) F-grades for sawn timber as given in Table 2.4;

(b) F-grades for plywood as given in Table 5.1;

(c) MGP grades and A17 stress grade as given in Appendix H;

(d) GL grades for glulam as given in Table 7.1; and

(e) properties stress grades detailed in a manufacturer's product specification.

2 A reference population is a population of graded structural timber for which the design properties have been evaluated. The reference population is defined in terms of the species, source of timber, production methods, moisture content (whether seasoned or unseasoned), size of pieces, stress grade, and the method of grading used.

1.8.2.31 *Structural element*

The component timber members and joints which make up a resulting structural assembly.

Accessed by SWINBURNE UNIVERSITY OF TECHNOLOGY on 15 Aug 2007

@Seismicisolation

@Seismicisolation

1.8.2.32 *Structural timber*

Timber that has defined structural properties which meet the requirements of this Standard.

1.8.2.33 *Unseasoned timber*

Timber in which the average moisture content exceeds 25 percent.

NOTE: Unseasoned timber is sometimes referred to as 'green' timber.

1.9 NOTATION

Except where specifically defined in a particular clause, the quantity symbols and factors listed in Appendix F are those used in this Standard.

1.10 UNITS

Unless otherwise stated, the units of measurement used in this Standard are in accordance with the International System of Units (SI).

NOTE: In general, newtons (N), millimetres (mm) and megapascals (MPa) are appropriate units to be used.

Accessed by SWINBURNE UNIVERSITY OF TECHNOLOGY on 15 Aug 2007

@Seismicisolation

@Seismicisolation

SECTION 2 DESIGN PROPERTIES OF STRUCTURAL TIMBER ELEMENTS

2.1 GENERAL

2.1.1 General procedure

Design capacities for structural timber shall be obtained through modifying characteristic capacities by factors appropriate to the service conditions and material property type. This general procedure applies to all types of structural timber, including sawn timber, laminated timber, natural round timber and plywood.

NOTE: Appendices G and H give additional information on design properties.

2.1.2 Member design capacity

The design capacity (ϕR), of a structural member is the product of the characteristic strength of the material, the appropriate geometric property, factors to allow for variation in strength with the environment and configuration of the element in use, and a capacity factor, and is expressed as follows:

$$(\phi R) = \phi\, k_{mod} \left[f_o' X\right] \qquad \ldots 2.1$$

where

ϕ = capacity factors (see Clause 2.3)

f_o' = characteristic strength of material appropriate to a given failure mode, in megapascals

k_{mod} = product of modification factors as defined in Clause 2.4 and elsewhere in this Standard ($k_1 \times k \ldots\ldots\ldots \times k_n$)

$\left[f_o' X\right]$ = characteristic capacity appropriate to the load application and mode of failure

X = geometric sectional property of member appropriate to the method of load application to produce a particular failure mode.

NOTE: As an example the factor k_{mod} for design moment capacity in bending of a solid timber member is typically given by $k_{mod} = k_1\ k_4\ k_6\ k_9\ k_{11}\ k_{12}$. The appropriate geometric property is section modulus, (Z), and the appropriate characteristic strength is f_b', giving the following design capacity:

$$(\phi M) = \phi\, k_1\, k_4\, k_6\, k_9\, k_{11}\, k_{12} \left[f_b'\, Z\right]$$

2.1.3 Member stiffness

In determining member stiffness the design rigidity is the product of the relevant section property, the average modulus of elasticity and various modification factors denoted by 'j' that account for service conditions as given in Clause 2.4.1.2.

2.2 DESIGN PROPERTIES

2.2.1 General

The design properties of structural timber elements may be determined on the basis of species, stress grade and moisture content as given in Clause 2.2.2.

Accessed by SWINBURNE UNIVERSITY OF TECHNOLOGY on 15 Aug 2007

@Seismicisolation

@Seismicisolation

2.2.2 Properties

2.2.2.1 *Characteristic strengths for bearing, shear at joint details and tension perpendicular to the grain*

Characteristic strength properties for bearing, shear at joint details and tension perpendicular to the grain may be determined on the basis of the strength group of the timber to be used.

Strength group classifications for commonly available species and groups of species are given in Tables 2.1 and 2.2. Characteristic strength properties in bearing, shear at joint details and tension perpendicular to the grain that correspond to strength group classifications are given in Tables 2.3(A) and 2.3(B).

NOTE: Structural grades for specific species and the associated stress grades are given in AS 1720.2.

TABLE 2.1

HARDWOOD TIMBER—STRENGTH GROUP CLASSIFICATIONS, JOINT GROUP CLASSIFICATIONS AND DESIGN DENSITY FOR SOME COMMON SPECIES AND GROUPS OF SPECIES

Species	Moisture condition	Strength group (see Note 1)	Joint group	Design density (see Note 2) kg/m^3
Mixed Australian hardwoods (excluding rainforest species) from S.A. and southern N.S.W.	Unseasoned	S4	J3	1 050
	Seasoned	SD4	JD3	650
Ash-type eucalypts from N.S.W. Highlands, Victoria and Tasmania	Unseasoned	S4	J3	1 050
	Seasoned	SD4	JD3	650
Non-ash-type eucalypts and Corymbias from Qld and N.S.W.	Unseasoned	S3	J2	1 150
	Seasoned	SD3	JD2	750
Rainforest species	Unseasoned	S7	J4	800
	Seasoned	SD7	JD4	500
Ash, alpine	Unseasoned	S4	J3	1 050
	Seasoned	SD4	JD3	650
Ash, mountain	Unseasoned	S4	J3	1 050
	Seasoned	SD3	JD3	650
Ash, silver-top	Unseasoned	S3	J2	1 100
	Seasoned	SD3	JD2	850
Balau	Unseasoned	S2	J2	1 150
	Seasoned	SD3	JD2	900
Blackbutt	Unseasoned	S2	J2	1 150
	Seasoned	SD2	JD2	900
Box, brush	Unseasoned	S3	J2	1 150
	Seasoned	SD3	JD2	900
Box, grey, coast	Unseasoned	S1	J1	1 200
	Seasoned	SD1	JD1	1 100

(*continued*)

Accessed by SWINBURNE UNIVERSITY OF TECHNOLOGY on 15 Aug 2007

@Seismicisolation

@Seismicisolation

TABLE 2.1 (*continued*)

Species	Moisture condition	Strength group (see Note 1)	Joint group	Design density (see Note 2) kg/m^3
Brown barrel	Unseasoned	S4	J3	1 100
	Seasoned	SD4	JD3	750
Chengal	Unseasoned	S1	J2	1 150
	Seasoned	SD2	JD2	950
Gum, blue, southern	Unseasoned	S3	J2	1 150
	Seasoned	SD2	JD2	1 000
Gum, blue, Sydney	Unseasoned	S3	J2	1 100
	Seasoned	SD3	JD2	850
Gum, red, river	Unseasoned	S5	J2	1 150
	Seasoned	SD5	JD2	900
Gum, rose	Unseasoned	S3	J2	1 100
	Seasoned	SD4	JD2	750
Gum, spotted	Unseasoned	S2	J1	1 200
	Seasoned	SD2	JD1	1 100
Hardwood, Johnstone River	Unseasoned	S2	J1	1 150
	Seasoned	SD3	JD1	950
Ironbark, grey	Unseasoned	S1	J1	1 250
	Seasoned	SD1	JD1	1 100
Ironbark, red, narrow-leaved	Unseasoned	S2	J1	1 250
	Seasoned	SD3	JD1	1050
Jarrah	Unseasoned	S4	J2	1 100
	Seasoned	SD4	JD2	800
Kapur	Unseasoned	S3	J2	1 100
	Seasoned	SD4	JD2	750
Karri	Unseasoned	S3	J2	1 150
	Seasoned	SD2	JD2	900
Kempas	Unseasoned	S2	J1	1 100
	Seasoned	SD2	JD2	900
Kwila (Merbau)	Unseasoned	S2	J2	1 150
	Seasoned	SD3	JD2	850
Lumbayau, Chengkulang	Unseasoned	S5	J3	1 100
	Seasoned	SD5	JD3	750
Mahogany, red	Unseasoned	S2	J1	1 200
	Seasoned	SD3	JD1	950
Marri	Unseasoned	S3	J2	1 100
	Seasoned	SD3	JD2	850
Meranti, dark red	Unseasoned	S5	J4	1 100
	Seasoned	SD6	JD4	600 to 750

(*continued*)

Accessed by SWINBURNE UNIVERSITY OF TECHNOLOGY on 15 Aug 2007

@Seismicisolation

@Seismicisolation

TABLE 2.1 (*continued*)

Species	Moisture condition	Strength group (see Note 1)	Joint group	Design density (see Note 2) kg/m^3
Mersawa	Unseasoned	S6	J3	1 050
	Seasoned	SD6	JD3	700
Messmate	Unseasoned	S3	J3	1 100
	Seasoned	SD3	JD3	750
Oak, tulip, brown	Unseasoned	S2	J2	1 150
	Seasoned	SD2	JD2	900
Stringybark, brown	Unseasoned	S3	J2	1 100
	Seasoned	SD3	JD2	850
Stringybark, yellow	Unseasoned	S3	J2	1 150
	Seasoned	SD3	JD2	900
Tallowwood	Unseasoned	S2	J1	1 200
	Seasoned	SD2	JD2	1 000
Turpentine	Unseasoned	S3	J2	1 050
	Seasoned	SD3	JD2	950
Wandoo	Unseasoned	S2	J1	1 250
	Seasoned	SD3	JD1	1 100

NOTES:

1 For classification into strength groups—see AS 2878.

2 For use only in computing dead load due to mass of timber.

Accessed by SWINBURNE UNIVERSITY OF TECHNOLOGY on 15 Aug 2007

@Seismicisolation

@Seismicisolation

TABLE 2.2

SOFTWOOD TIMBER—STRENGTH GROUP CLASSIFICATIONS, JOINT GROUP CLASSIFICATIONS AND DESIGN DENSITY FOR SOME COMMON SPECIES AND GROUPS OF SPECIES

Species	Moisture condition	Strength group (see Note 1)	Joint group	Design density (see Note 2) kg/m^3
Mixed *Pinus* species (Australian grown)	Unseasoned	—	—	850
	Seasoned	SD7	JD4	550
Mixed softwood species (excl. *Pinus* species)	Unseasoned	—	—	850
	Seasoned	SD8	JD4	500
Imported softwoods (unidentified)	Unseasoned	S7	J6	850
	Seasoned	SD8	JD6	400
Fir, Douglas, North America	Unseasoned	S5	J4	710
	Seasoned	SD5	JD4	550
Fir, Douglas, elsewhere	Unseasoned	S6	J5	710
	Seasoned	SD6	JD5	550
Hemlock western	Unseasoned	S6	J4	750
	Seasoned	SD6	JD4	500
Hem-fir (species mixture)	Unseasoned	S7	J5	750
	Seasoned	SD7	JD5	550
Pine, cypress, white	Unseasoned	S5	J3	850
	Seasoned	SD6	JD3	700
Pine, hoop	Unseasoned	S6	J4	800
	Seasoned	SD5	JD4	550
Pine, radiata (Australia)	Unseasoned	S6	J4	800
Pine, radiata (New Zealand)	Unseasoned	S7	J4	800
Pine, radiata (Australia and New Zealand)	Seasoned	SD6	JD4	550
Pine, slash	Unseasoned	S5	J3	850
	Seasoned	SD5	JD3	650
Spruce-pine-fir (species mixture)	Unseasoned	—	—	700
	Seasoned	SD7	JD5	500

NOTES:

1 For classification into strength groups—see AS 2878.

2 For use only in computing dead load due to mass of timber.

Accessed by SWINBURNE UNIVERSITY OF TECHNOLOGY on 15 Aug 2007

@Seismicisolation

@Seismicisolation

TABLE 2.3(A)

STRUCTURAL DESIGN PROPERTIES RELATED TO STRENGTH GROUPS—BEARING AND SHEAR

Strength group		Characteristic strength, MPa		
		Bearing		Shear at joints details
Unseasoned	Seasoned	Perpendicular to grain (f'_p)	Parallel to grain (f'_ℓ)	(f'_{sj})
—	SD1	31	90	12
—	SD22	27	80	10
—	SD3	23	70	8.7
S1	SD4	20	60	7.2
S2	SD5	15	45	6.1
S3	SD6	12	35	5.0
S4	SD7	9.7	26	4.3
S5	SD8	7.7	23	3.7
S6	—	6.2	19	3.1
S7	—	5.0	15	2.5

TABLE 2.3(B)

STRUCTURAL DESIGN PROPERTIES RELATED TO STRENGTH GROUPS—TENSION PERPENDICULAR TO GRAIN

Strength group	S1—S2 S1—SD2	S3—S4 SD3—SD4	S5—S6 SD5—SD6	S7 SD7—SD8
Characteristic tension strength perpendicular to grain, f'_{tp}, MPa	0.9	0.7	0.6	0.5

2.2.2.2 *Characteristic strengths for bending, tension, compression and shear and elastic moduli*

The characteristic strength properties in bending, tension, compression and shear and characteristic stiffnesses for the design of structural timber elements using the materials listed may be determined as follows:

(a) For F-grades for timber, refer to Table 2.4.

(b) For F-grades for plywood, refer to Table 5.1.

(c) For MGP grades, refer to Table H2.3 of Appendix H.

(d) For round timbers, F-grade properties given in Table 2.4 apply. F-grades for poles may be determined from Table 6.1 on the basis of species strength group classification.

(e) For GL-grades for glued laminated timber, refer to Table 7.1.

(f) For laminated veneer lumber, refer to the manufacturer.

(g) For A17 stress grade, refer to Table H3.3 of Appendix H.

Accessed by SWINBURNE UNIVERSITY OF TECHNOLOGY on 15 Aug 2007

@Seismicisolation

@Seismicisolation

TABLE 2.4

STRUCTURAL DESIGN PROPERTIES FOR F-GRADES

Stress-grade	Characteristic strength, MPa					Characteristic short duration average modulus of elasticity* parallel to the grain, MPa (E)	Characteristic short duration average modulus of rigidity for beams, MPa (G)
	Bending (f'_b)	Tension parallel to grain (f'_t)		Shear in beam (f'_s)	Compression parallel to grain (f'_c)		
		Hardwood	Softwood				
A2 F34	100	60	50	7.2	75	21 500	1 430
F27	80	50	40	6.1	60	18 500	1 230
F22	65	50	40	6.1	60	16 000	1 070
F17	50	30	26	4.3	40	14 000	930
F14	40	25	21	3.7	30	12 000	800
F11	35	20	17	3.1	25	10 500	700
F8	25	15	13	2.5	20	9 100	610
F7	20	12	10	2.1	15	7 900	530
F5	16	9.7	8.2	1.8	12	6 900	460
F4	13	7.7	6.5	1.5	9.7	6 100	410

* The average modulus of elasticity, $(\overline{E})$, includes an allowance of about 5 percent for shear deformation (see Clause 2.1.3 and Appendix B).

2.2.2.3 *Species joint group classification*

The characteristic strength properties applicable for various fastener types related to species joint group classification are given in Section 4. The joint group classifications for species are given in Tables 2.1 and 2.2.

2.2.2.4 *Design density*

The density of unseasoned and seasoned timber for different species for use in calculating design dead loads are given in Tables 2.1 and 2.2.

NOTES:

1 The density of unseasoned timber depends on its moisture content, which reduces as the timber dries. The values given in Tables 2.1 and 2.2 have been computed on the basis that the percentage saturation of the timber is 45 percent for softwoods and 80 percent for hardwoods.

2 The values of density given in Tables 2.1 and 2.2 do not represent average values for the species indicated; they are intended for use in computing the dead loads imposed by timber.

3 A more extensive list of timber species and species groups is given in AS 1720.2.

2.2.2.5 *In-grade evaluation*

Characteristic strength and stiffness design properties may also be established by in-grade evaluation in accordance with the requirements of AS/NZS 4063 for timber products and AS/NZS 2098.9 for plywood products. Properties derived by in-grade evaluation shall be used in preference to properties given in Tables 2.3(A), 2.3(B) and 2.4.

2.3 CAPACITY FACTOR

Values of the capacity factor, ϕ, for calculating the design capacity, (ϕR), of structural members and structural joints are listed in Table 2.5 and Table 2.6 respectively. The basis for assigning these values is detailed in Appendix I.

NOTE: For the ϕ factor to be used when applying AS/NZS 4063 refer to Appendix I.

Accessed by SWINBURNE UNIVERSITY OF TECHNOLOGY on 15 Aug 2007

@Seismicisolation

Accessed by SWINBURNE UNIVERSITY OF TECHNOLOGY on 15 Aug 2007
@Seismicisolation

TABLE 2.5

VALUES OF CAPACITY FACTOR (ϕ) FOR CALCULATING THE DESIGN CAPACITY (ϕR) OF A STRUCTURAL MEMBER APPROPRIATE TO THE TYPE OF STRUCTURAL MATERIAL AND APPLICATION OF STRUCTURAL MEMBER

Structural material		Application of structural member†		
Type of structural material and applicable Australian product Standards	Characteristic design property to which the capacity factor, (ϕ), shall be applied for calculating the design capacity, (ϕR) of structural members appropriate to their application	All structural elements† in houses and secondary structural elements† in structures other than houses	Primary structural elements† in structures other than houses	Primary structural elements† in structures intended to fulfil an essential services or post disaster function
		Capacity factor, ϕ*		
Visually graded sawn timber graded‡ to AS 2082 and AS 2858 for hardwood and softwood respectively	All characteristic design strengths, f'_b, f'_t, f'_s and f'_c, corresponding to F-grades specified in Table 2.4 All characteristic design strengths, f'_p, f'_l, f'_{tp} and f'_{sj}, corresponding to strength groups specified in Tables 2.3(A) and 2.3(B)	0.8	0.65	0.60
Machine-graded sawn timber graded to AS/NZS 1748	Characteristic design strength in bending, f'_b, corresponding to F-grades specified in Table 2.4	0.85	0.70	0.65
	All other characteristic design strengths, f'_t, f'_s and f'_c corresponding to F-grades specified in Table 2.4 All characteristic design strengths, f'_p, f'_l, f'_{tp} and f'_{sj} corresponding to strength groups specified in Tables 2.3(A) and 2.3(B)	0.80	0.65	0.60
	All characteristic design strengths, f'_b, f'_t, f'_s and f'_c corresponding to MGP grades specified in Table H1 in Appendix H	0.90	0.75	0.70
Proof-graded sawn timber graded to AS 3519	Characteristic design strength in bending, f'_b, corresponding to F-grades specified in Table 2.4	0.85	0.70	0.65
	All characteristic design strengths, f'_t, f'_s and f'_c corresponding to F-grades specified in Table 2.4 All characteristic design strengths, f'_p, f'_l, f'_{tp} and f'_{sj} corresponding to strength groups specified in Tables 2.3(A) and 2.3(B)	0.80	0.65	0.60

(*continued*)

@Seismicisolation

Accessed by SWINBURNE UNIVERSITY OF TECHNOLOGY on 15 Aug 2007
@Seismicisolation

TABLE 2.5 (*continued*)

Structural material		Application of structural member†		
Type of structural material and applicable Australian product Standards	Characteristic design property to which the capacity factor, (ϕ), shall be applied for calculating the design capacity, (ϕR) of structural members appropriate to their application	All structural elements† in houses and secondary structural elements† in structures other than houses	Primary structural elements† in structures other than houses	Primary structural elements† in structures intended to fulfil an essential services or post disaster function
		Capacity factor, ϕ*		
Round timbers graded to AS 2209	All characteristic design strengths, f'_b, f'_t, f'_s and f'_c, corresponding to F-grades given in Table 2.4 All characteristic design strengths, f'_p, f'_l, f'_{tp} and f'_{sj}, corresponding to strength groups specified in Tables 2.3(A) and 2.3(B)	0.80	0.65	0.60
Plywood manufactured to AS/NZS 2269	All characteristic design strengths, f'_b, f'_t, f'_s, f'_c and f'_p, corresponding to F-grades specified in Table 5.1	0.90	0.80	0.75
Glued laminated timber manufactured to AS/NZS 1328	All characteristic design strengths, f'_b, f'_t, f'_s and f'_c, corresponding to GL-grades specified in Table 7.1	0.85	0.70	0.65
	All characteristic design strengths, f'_p, f'_l, f'_{tp} and f'_{sj}, corresponding to strength groups specified in Tables 2.3(A) and 2.3(B)	0.80	0.65	0.60
Laminated veneer lumber manufactured to AS/NZS 4357	Design properties—refer to manufacturer's specification	0.90	0.85	0.80

* Capacity factors are based on the requirements specified in Appendix I.

† Refer to definitions: structural element Clause 1.8.2.31; secondary structural element Clause 1.8.2.24; primary structural element Clause 1.8.2.20.

‡ Where the F-grade design properties for visually graded timber have been verified by in-grade evaluation and identified in either AS 2082 or AS 2858, then the appropriate capacity factors may be determined in accordance with the requirements specified in Appendix I.

@Seismicisolation

Accessed by SWINBURNE UNIVERSITY OF TECHNOLOGY on 15 Aug 2007
@Seismicisolation

A2

TABLE 2.6

VALUES OF CAPACITY FACTOR (ϕ) FOR CALCULATING THE DESIGN CAPACITY (ϕR) OF A STRUCTURAL JOINTS APPROPRIATE TO THE TYPE OF FASTENER AND APPLICATION OF STRUCTURAL JOINT

Structural material		Application of structural member†		
Type of structural material and applicable Australian product Standards	Characteristic design property to which the capacity factor, ϕ, shall be applied for calculating the design capacity, (ϕR) of structural joints appropriate to their application	All structural elements† in houses and secondary structural elements† in structures other than houses	Primary structural elements† in structures other than houses	Primary structural elements† in structures intended to fulfil an essential services or post disaster function
		Capacity factor, ϕ*		
Nails conforming to AS 2334	The characteristic capacity, Q_k for nails as specified in Section 4.2	0.85	0.80	0.75
Screws conforming to AS 3566	The characteristic capacity, Q_k, for screws as specified in Section 4.3	0.85	0.80	0.75
Multi-toothed nail plates conforming to manufacturer's specifications	Refer to manufacturer's specifications	≤0.85	≤0.80	≤0.75
Bolts conforming to AS 1111	The characteristic capacity, Q_k, for bolts as specified in Section 4.4	0.75	0.65	0.60
Coach screws conforming to AS 1393	The characteristic capacity, Q_k, for coach screws as specified in Section 4.5			
Split ring fasteners conforming to AS 1442	The characteristic capacity, Q_k, for split ring fasteners as specified in Section 4.6			
Shear plate fasteners conforming to AS 1442	The characteristic capacity, Q_k, for shear plate fasteners as specified in Section 4.7			

* Capacity factors are based on the requirements specified in Appendix I.

† Refer to definitions: structural element Clause 1.8.2.31; secondary structural element Clause 1.8.2.24; primary structural element Clause 1.8.2.20.

@Seismicisolation

@Seismicisolation

2.4 MODIFICATION FACTORS

2.4.1 Duration of load

2.4.1.1 *Effect on strength*

The effect of duration of load on strength is given by the modification factor k_1 in Table 2.7.

In checking the strength of a structural element, all load combinations shall be considered.

For any given combination of loads of differing duration, the factor k_1 to be used is that appropriate to the load which is of the shortest duration. In Table 2.7, the effective duration of a peak load refers to the cumulative duration for which the peak load occurs.

For the purposes of interpretation in the selection of load-duration factors in this Standard, the following shall apply:

(a) Dead loads, and live loads which are removed or replaced at regular intervals such that the structure remains near its design load for a substantial proportion of its life, shall be considered 'permanent loads'.

(b) Live loads (such as those due to vehicles or people) that act on floors, and are applied at frequent but irregular intervals such that the structure is unloaded, or loaded well below the nominal live load, for most of each day, shall be considered 'loads of five months' duration'.

(c) Live loads, such as those arising during erection and maintenance, and at infrequent crowd loading, applied for periods of a few days and at infrequent intervals, shall be considered 'loads of five days' duration'.

(d) Impact loads such as those caused by falling weights or snatch lifts, shall be considered 'loads of five second duration'.

(e) Snow loads shall be considered as loads of duration, as follows:

  (i) Five months for alpine areas.

  (ii) Five days for subalpine areas.

(f) Earthquake loads shall be considered 'loads of five second duration'.

(g) Strength limit state gust wind loads referred to in AS/NZS 1170.2 shall be considered single gust events in Table 2.7.

NOTE: The critical strength limit state load combination may not be the one with the highest value because the resistance of timber to load is a function of duration of load. In some cases, long-term load combinations involving long-term live loads may be more critical than short-term load combinations using slightly larger, but shorter-term live loads.

Accessed by SWINBURNE UNIVERSITY OF TECHNOLOGY on 15 Aug 2007

@Seismicisolation

@Seismicisolation

TABLE 2.7

DURATION OF LOAD FACTOR FOR STRENGTH

Type of load	Effective duration of peak load	Modification factor (k_1)*	
		For the strength of timber	For the strength of joints using laterally loaded fasteners†
Wind gust‡ and instantaneous	5 seconds	1.00	1.14
Standard test	5 minutes	1.00	1.00
Short-term	5 hours	0.97	0.86
Medium-term	5 days	0.94	0.77
Long-term	5 months	0.80	0.69
Permanent	50+ years	0.57	0.57

* Typical values of k_1 for various load combinations are given in Table G1, Appendix G.

† For the strength of joints with fasteners loaded in withdrawal and for the strength of steel in joints, k_1 = 1.00.

‡ Wind actions determined in accordance with AS/NZS 1170.2:2002.

2.4.1.2 *Effect on stiffness*

For members in bending and compression or for members in tension, the calculated short-term deformation shall be multiplied by the appropriate creep factor j_2 or j_3, as given in Table 2.8 and illustrated graphically in Figures 2.1 and 2.2.

Values intermediate between those given in Table 2.8 may be obtained through an interpolation involving the logarithm of time, and a linear function of initial moisture content as shown in Figures 2.1 and 2.2.

When several types of load act as a single load combination on a timber member, the maximum deformation shall be taken to be equal to the sum of the deformations computed for each type of load acting alone.

Where there is a recovery period of more than ten times the period of the applied load, the creep component of deformation for that load type may be assumed to be totally recovered.

The modification factors j_2 and j_3 given in Table 2.8 are not applicable to collapse susceptible hardwoods (see Clause 1.8.2) which are unseasoned at the time of loading. For these timbers the creep factors may be considerably greater than the values shown.

NOTES:

1 In general, peak values of serviceability live loads are not of a permanent nature; accordingly if a designer wishes to compute the long-term deformations of a structure to satisfy a specified serviceability limit state, the designer first estimates the portion of the serviceability load that is permanently or semi-permanently applied and then uses an appropriate creep factor to compute the deformation for that portion.

2 Where there is a recovery period of more than ten times the duration of the applied load, the creep component of deformation may be assumed to be totally recovered.

Accessed by SWINBURNE UNIVERSITY OF TECHNOLOGY on 15 Aug 2007

@Seismicisolation

@Seismicisolation

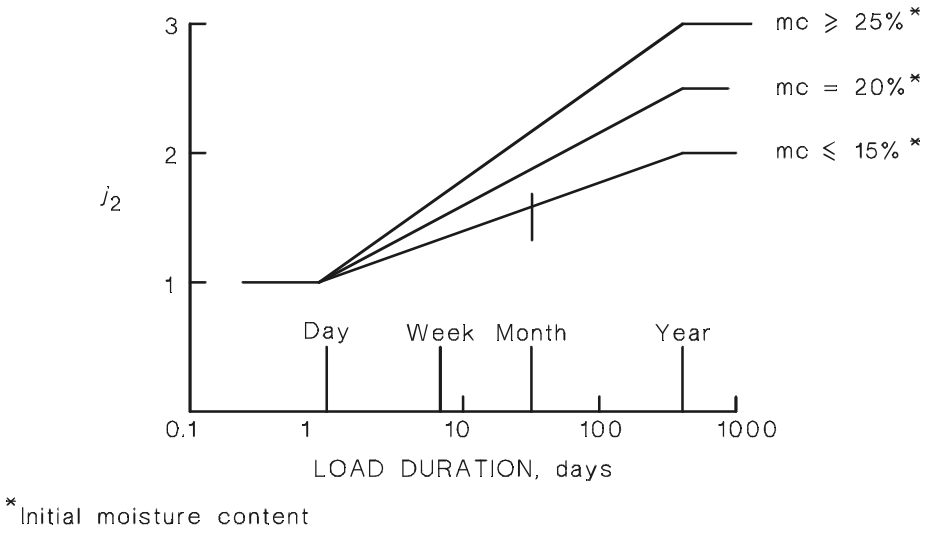

FIGURE 2.1 DURATION FACTOR j_2 FOR BENDING AND COMPRESSION DEFORMATIONS

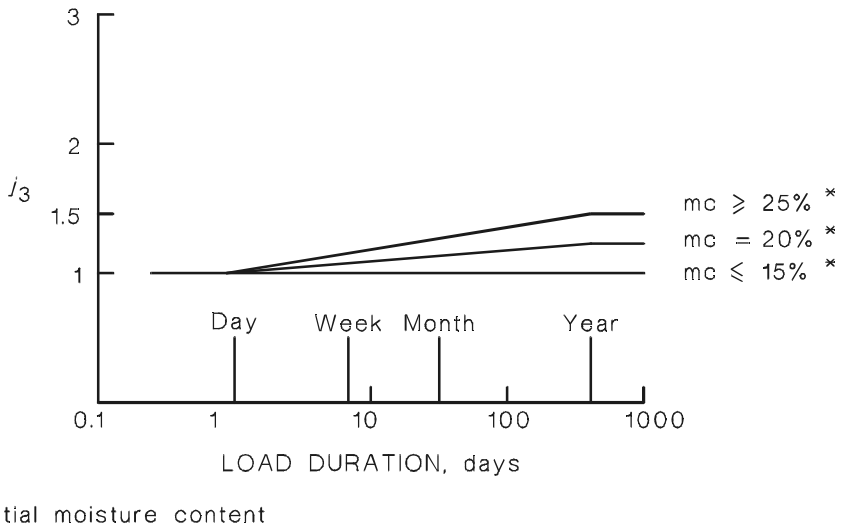

FIGURE 2.2 DURATION FACTOR j_3 FOR TENSION DEFORMATIONS

TABLE 2.8

DURATION OF LOAD FACTOR FOR CREEP DEFORMATION

Initial moisture content*	For bending, compression and shear members (j_2)		For tension members (j_3)	
	Load duration	Load duration	Load duration	Load duration
Percent	≤1 day	≥1 year	≤1 day	≥1 year
≤15	1	2	1	1
≥25	1	3	1	1.5

* Moisture content at the time of load application.

Accessed by SWINBURNE UNIVERSITY OF TECHNOLOGY on 15 Aug 2007

@Seismicisolation

@Seismicisolation

2.4.2 Moisture condition

2.4.2.1 *General*

Depending on the initial moisture content of the timber and the moisture content at time of loading and throughout its life the characteristic capacity of timber shall be modified by a factor denoted by k_4.

NOTE: For appropriate values of k_4 for glulam refer to Clause 7.4.2 and for laminated veneer lumber (LVL) to Clause 8.4.3.

2.4.2.2 *Unseasoned timber*

For unseasoned timber generally k_4 equals 1.0. However, where unseasoned timber is used under normal conditions of temperature and humidity and will not be subject to its full design load until it has partially seasoned, i.e. to below 25 percent moisture content, the characteristic capacity for unseasoned timber may be increased by multiplying by the factor k_4 given in Table 2.9.

TABLE 2.9

PARTIAL SEASONING FACTOR, k_4

Least dimension of member	38 mm or less	50 mm	75 mm	100 mm or more
Value of k_4	1.15	1.10	1.05	1.00

2.4.2.3 *Seasoned timber*

For seasoned timber generally k_4 equals 1.0. However, where seasoned timber is subjected to conditions in which its average moisture content for a 12-month period is expected to exceed 15 percent, the characteristic capacity shall be decreased.

The value of k_4 shall be determined as the greater of—

$$k_4 = 1 - 0.3\left[\frac{EMC - 15}{10}\right] \qquad \text{. . . 2.4.2(a)}$$

and

$$k_4 = 0.7 \qquad \text{. . . 2.4.2(b)}$$

where

EMC = the highest value of the annual average moisture content (percent) that the timber will attain in service.

2.4.3 Temperature

For covered timber structures under ambient conditions, no modification for strength need be made for the effect of temperature (i.e. k_6 equals 1.0) except that where seasoned timber is used in structures erected in coastal regions of Queensland north of latitude 25°S, and all other regions of Australia north of latitude 16°S, the strength shall be modified by a factor k_6 of 0.9.

NOTE: Information on the effects of high temperatures can be obtained from MEYER, R.W. and KELLOG, R.M. Structural Use of Wood in Adverse Environments, Van Nostrand, 1982.

2.4.4 Length and position of bearing

For rectangular bearing areas with the bearing surface 75 mm or more from the end of a piece of timber, the characteristic capacity in bearing perpendicular to the grain given in Clause 3.2.6 may be modified by the appropriate factor k_7 in Table 2.10, with the length of bearing being measured parallel to the grain of the loaded member. For all other conditions k_7 equals 1.0.

Accessed by SWINBURNE UNIVERSITY OF TECHNOLOGY on 15 Aug 2007

@Seismicisolation

@Seismicisolation

For circular bearing areas the effective bearing length shall be taken as being equal to the diameter of the bearing area.

TABLE 2.10

LENGTH OF BEARING FACTOR

Length of bearing of member	12	25	50	75	125	150 or more
Value of k_7	1.85	1.60	1.30	1.15	1.05	1.00

2.4.5 Strength sharing between parallel members

2.4.5.1 *General*

When a sawn timber structural member is one of a number of parallel acting elements that interact to assist each other to form a strength sharing structural system, then the characteristic capacities in bending for sawn structural timber may be increased by the strength sharing factor, (k_9), determined in accordance with Clause 2.4.5.3. Values of the factor, k_9, specified in this Clause shall not apply to plywood, glued laminated timber and LVL members (see Sections 5, 7 and 8).

NOTE: In addition to strength sharing structural systems, grid systems provide a method for laterally distributing concentrated loads (see Appendix E).

2.4.5.2 *Strength sharing structural systems*

Parallel acting systems are classified as follows:

(a) Combined parallel systems.

(b) Discrete parallel systems.

A combined parallel system is comprised of two or more elements that are effectively fastened together.

In determining the factor k_9, for a combined parallel system, the effective number of elements shall be taken as the number of elements, n_{com}, that are effectively fastened together to form a single group. An example of a combined parallel system is illustrated in Figure 2.3(a).

NOTES:

1 Effectively fastened together means that all of the elements are constrained to the same deformation under load.

2 One method of effectively fastening elements together is by rigidly connecting all of the elements together at a large number of points along their length.

A discrete parallel system has three or more members that are discretely spaced parallel to each other. These discretely spaced members support either an overlying set of members, usually laid at right angles to the supporting members, or a structural sheathing material.

In determining the factor k_9 for a discrete parallel system, the effective number of elements shall be taken as the product of—

$$n_{com} \times n_{mem}$$

where

n_{com} is the number of elements that are effectively fastened together to form a single group and n_{mem} is the number of members that are discretely spaced parallel to each other.

Examples of discrete parallel systems are illustrated in Figures 2.3(b) and 2.3(c).

NOTE: For a parallel system, in the event of the failure of a single supporting member, then the overlying members or sheathing material should be capable of transferring loads to adjacent supporting members.

Accessed by SWINBURNE UNIVERSITY OF TECHNOLOGY on 15 Aug 2007

@Seismicisolation

@Seismicisolation

Example
$n_{com} = 4$
$\therefore g_{31} = 1.24$
$n_{mem} = 1$
$n_{com} \times n_{mem} = 4$
$\therefore g_{32} = 1.24$

(a) Combined parallel system

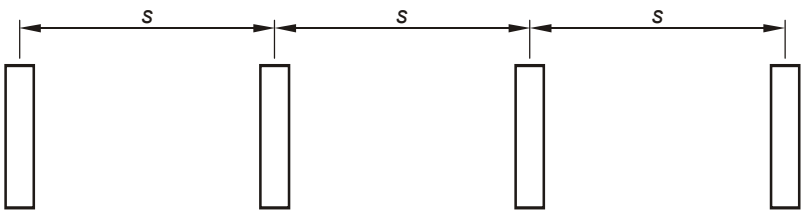

Example
$n_{com} = 1$
$\therefore g_{31} = 1.0$
$n_{mem} = 4$
$n_{com} \times n_{mem} = 4$
$\therefore g_{32} = 1.24$

(b) Discrete parallel system

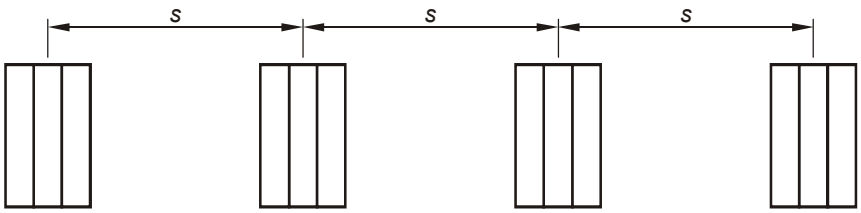

Example
$n_{com} = 3$
$\therefore g_{31} = 1.20$
$n_{mem} = 4$
$n_{com} \times n_{mem} = 12$
$\therefore g_{32} = 1.33$

(c) Combined and discrete parallel system

FIGURE 2.3 PARALLEL SYSTEMS

2.4.5.3 *Modification factor for strength sharing*

The strength sharing factor k_9 is given by the following equation:

A2 | $$k_9 = g_{31} + (g_{32} - g_{31})\left[1 - \frac{2s}{L}\right], \text{ but not less than } 1.0 \qquad \ldots 2.4.5$$

where

g_{31} = geometric factor appropriate to the number of members (n_{com}) in a combined parallel system given in Table 2.11

g_{32} = geometric factor appropriate to the number of members ($n_{com} \times n_{mem}$) in a discrete system given in Table 2.11

s = the centre-to-centre spacing of the discrete parallel members

L = the effective span of the parallel members

The strength sharing factor k_9 is illustrated graphically in Figure 2.4.

Accessed by SWINBURNE UNIVERSITY OF TECHNOLOGY on 15 Aug 2007

@Seismicisolation

@Seismicisolation

TABLE 2.11

GEOMETRIC FACTORS FOR PARALLEL SYSTEMS

Number of members in combined parallel (n_{com})	g_{31}	Total number of members in parallel system ($n_{com} \times n_{mem}$)	g_{32}
1	1.00	1	1.00
2	1.14	2	1.14
3	1.20	3	1.20
4	1.24	4	1.24
5	1.26	5	1.26
6	1.28	6	1.28
7	1.30	7	1.30
8	1.31	8	1.31
9	1.32	9	1.32
10 or more	1.33	10 or more	1.33

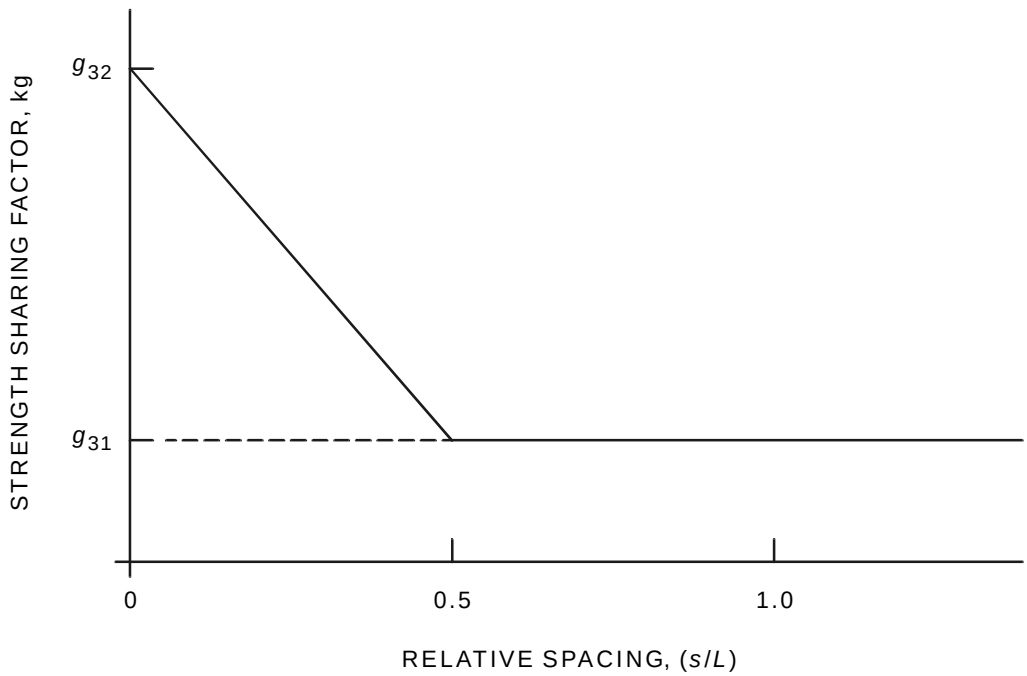

FIGURE 2.4 STRENGTH SHARING FACTOR

2.4.6 Size factor

Except where in-grade testing demonstrates a different effect of size, the capacity in bending and tension for solid timber shall be modified by the size factor k_{11} as given by the following:

(a) For bending, k_{11} shall be the lesser of $(300/d)^{0.167}$ or 1.

(b) For tension parallel to the grain, k_{11} shall be the lesser of $(150/d)^{0.167}$ or 1.

(c) For shear, k_{11} shall be 1.0.

(d) For compression, k_{11} shall be 1.0.

(e) For tension perpendicular to the grain, $k_{11} = (V_o/V)^{0.2}$ where $V_o = 10^7$ (a reference volume) and V is the volume in mm^3 of timber stressed above 80 percent of the maximum value in tension perpendicular to the grain.

Accessed by SWINBURNE UNIVERSITY OF TECHNOLOGY on 15 Aug 2007

@Seismicisolation

@Seismicisolation

NOTES:

1 For built-up members the size factor is applied to the individual components; an example of this would be the tension flange of a box beam in which case the k_{11} value for tension members would be used on the cross-section of the tension flange only.

2 For glulam and LVL, refer to Sections 7 and 8 respectively, for the appropriate size factors.

3 For MGP grades or A17 stress grade, refer to Appendix H.

2.4.7 Stability factor

In the design of slender bending or axial compression members, a factor k_{12} shall be used to allow for the effects of slenderness on strength. The stability factor is defined in Clause 3.2.4 for bending members and Clause 3.3.3 for compression members.

Accessed by SWINBURNE UNIVERSITY OF TECHNOLOGY on 15 Aug 2007

@Seismicisolation

@Seismicisolation

SECTION 3 DESIGN CAPACITY OF BASIC STRUCTURAL MEMBERS

3.1 GENERAL

This Section shall be applied in conjunction with Section 2. This Section applies to the design of basic structural members such as beams, columns and tension members. In particular, many of the design parameters given refer to members of rectangular cross-section, for which the notation used is shown in Figure 3.1. The corresponding parameters for members of less usual shape are given in Appendix E. Special design requirements related to the use of plywood, pole timbers, glued-laminated construction and laminated veneer lumber are given in Sections 5, 6, 7 and 8 respectively. Methods using a higher order approach to the design of members and for particular cases are given in Appendix E.

NOTE: In beam design, deflection considerations may govern member sizes (see Clauses 1.5, 2.4 and 2.5).

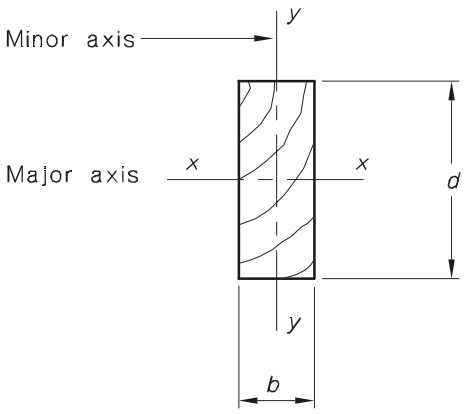

FIGURE 3.1 NOTATION FOR A RECTANGULAR CROSS-SECTION

3.2 BEAM DESIGN

3.2.1 Bending strength

3.2.1.1 *Design capacity*

The design capacity in bending, (ϕM), of unnotched beams, for strength limit state, shall satisfy—

$$(\phi M) \geq M^* \qquad \ldots 3.2(1)$$

where

$$(\phi M) = \phi\, k_1\, k_4\, k_6\, k_9\, k_{11}\, k_{12}\, [\, f'_b Z] \qquad \ldots 3.2(2)$$

and

M^* = design action effect in bending (see Clause 1.5.2.2)

ϕ = capacity factor (see Clause 2.3)

k_1 to k_{11} = the modification factors given in Section 2

k_{12} = stability factor see Clause 3.2.4

f'_b = characteristic strength in bending

Accessed by SWINBURNE UNIVERSITY OF TECHNOLOGY on 15 Aug 2007

@Seismicisolation

@Seismicisolation

Z = section modulus of beam about the axis of bending (for rectangular beams Z_x equals $bd^2/6$ and Z_y equals $db^2/6$, where b equals the breadth and d equals the depth of the beam).

3.2.1.2 *Bending about both axes*

For beams that can bend about both the major and minor axes simultaneously, for strength limit states, the design action effects in bending shall satisfy—

$$\left(\frac{M_x^*}{(\phi M_x)}\right)+\left(\frac{M_y^*}{(\phi M_y)}\right) \le 1 \qquad \ldots 3.2(3)$$

where

M_x^* = design action effect in bending about a beam's major principal x-axis (see Clause 1.5.2.2)

(ϕM_x) = design capacity in bending about a beam's major principal x-axis determined according to Clause 3.2.1

M_y^* = design action effect in bending about a beam's minor principal y-axis (see Clause 1.5.2.2)

(ϕM_y) = design capacity in bending about a beam's minor principal y-axis determined according to Clause 3.2.1.

For less conservative criteria than given by Equation 3.2(3), see Equations E5(1) and E5(2), Appendix E.

3.2.2 Effective span

The effective span of flexural members shall be taken as the distance between the centres of areas of bearing or of connections.

For members that extend over bearings longer than is necessary, the span may be taken as the distance between centres of imaginary bearings which are chosen in such a way that their lengths are adequate to comply with the requirements of this Standard.

3.2.3 Slenderness coefficient for lateral buckling under bending

3.2.3.1 *General*

For the general case, and for several useful specific cases, equations for evaluating the slenderness coefficient are given in Appendix E. For the special cases of solid beams of rectangular cross-section, the simple approximations given in Clause 3.2.3.2 may be used. For notation for beam restraints see Figure 3.2.

3.2.3.2 *Beams of rectangular cross-section*

For beams of rectangular cross-section, the slenderness coefficients may be taken as follows:

(a) *Beams that bend about their major axis having discrete lateral restraint systems* For a beam that is loaded along its compression edge and has discrete lateral restraints at points L_{ay} apart, along the compression edge of the beam as indicated in Figure 3.2, then the slenderness co-efficient, denoted by S_l, may be taken to be—

$$S_1 = 1.25\frac{d}{b}\left(\frac{L_{ay}}{d}\right)^{0.5} \qquad \ldots 3.2(4)$$

Accessed by SWINBURNE UNIVERSITY OF TECHNOLOGY on 15 Aug 2007

@Seismicisolation

@Seismicisolation

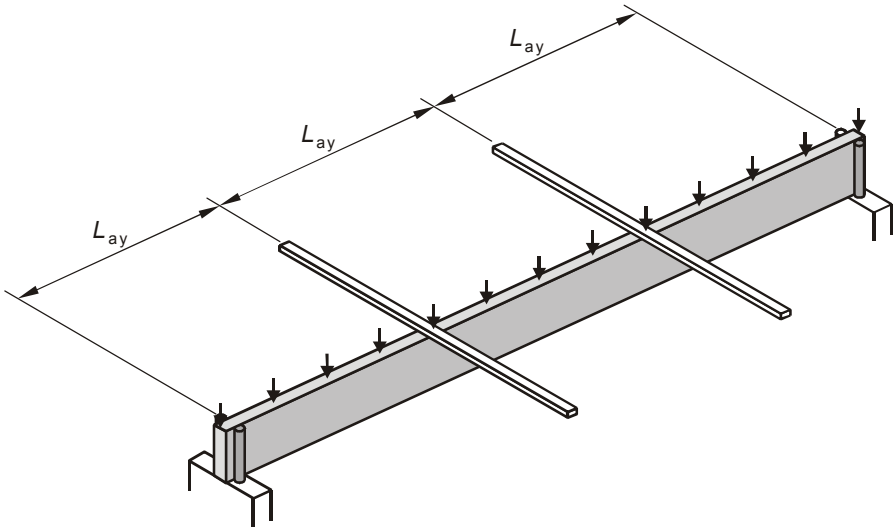

FIGURE 3.2 DISCRETE RESTRAINTS TO THE COMPRESSION EDGE

For a beam that is loaded along its tension edge and has discrete lateral restraints at points L_{ay} apart, along the tension edge of the beam as indicated in Figure 3.3, then the slenderness co-efficient, denoted by S_l, may be taken to be—

A2

$$S_1 = \left(\frac{d}{b}\right)^{1.35}\left(\frac{L_{ay}}{d}\right)^{0.25} \qquad \ldots 3.2(5)$$

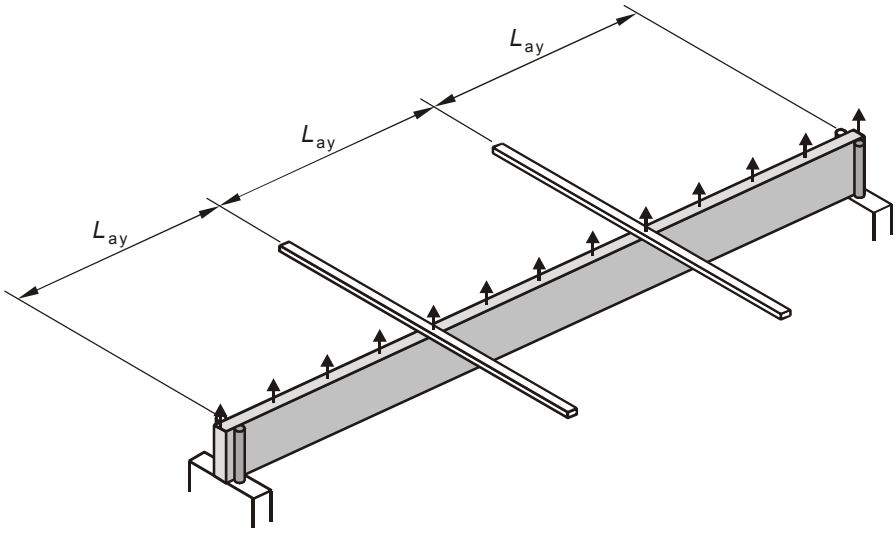

FIGURE 3.3 DISCRETE RESTRAINTS TO THE TENSION EDGE

(b) *Beams that bend about their major axis having continuous lateral restraint systems* A continuous lateral restraint system (see Figures 3.4 and 3.5) may be assumed to exist when—

$$\frac{L_{ay}}{d} \le 64\left(\frac{b}{\rho_b d}\right)^2 \qquad \ldots 3.2(6)$$

Accessed by SWINBURNE UNIVERSITY OF TECHNOLOGY on 15 Aug 2007

@Seismicisolation

@Seismicisolation

For a beam that is loaded along its compression edge and has a continuous lateral restraint system along the compression edge (see Figure 3.4), then the slenderness co-efficient, denoted by S_1, may be taken to be equal to zero.

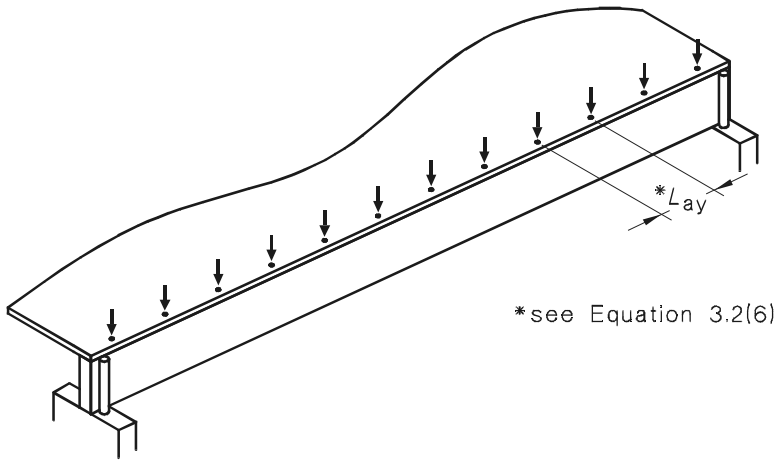

FIGURE 3.4 CONTINUOUS RESTRAINT ALONG THE COMPRESSION EDGE

For a beam that is loaded along its tension edge and which has a continuous lateral restraint system along the tension edge (see Figure 3.5), then the slenderness co-efficient, denoted by S_1, may be taken to be—

$$S_1 = 2.25\frac{d}{b} \qquad \ldots 3.2(7)$$

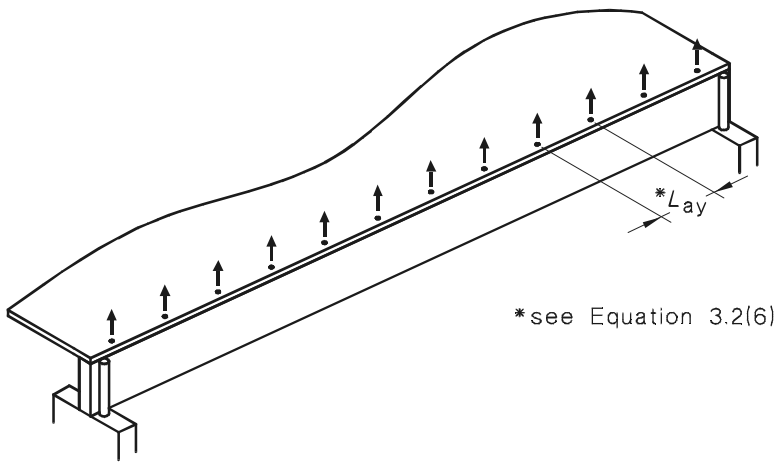

FIGURE 3.5 CONTINUOUS RESTRAINT ALONG THE TENSION EDGE

Accessed by SWINBURNE UNIVERSITY OF TECHNOLOGY on 15 Aug 2007

@Seismicisolation

@Seismicisolation

For a beam that is loaded along its tension edge, which in addition to having a continuous lateral restraint system along its tension edge, has equally spaced torsional restraints at points $L_{a\phi}$ apart, indicated in Figure 3.6, to prevent rotation about the beams Z axis, then the slenderness co-efficient, denoted by S_1, may be taken to be—

$$S_1 = \frac{1.5\,d/b}{\left[\left(\frac{\pi\,d}{L_{a\phi}}\right)^2 + 0.4\right]^{0.5}} \qquad \ldots 3.2(8)$$

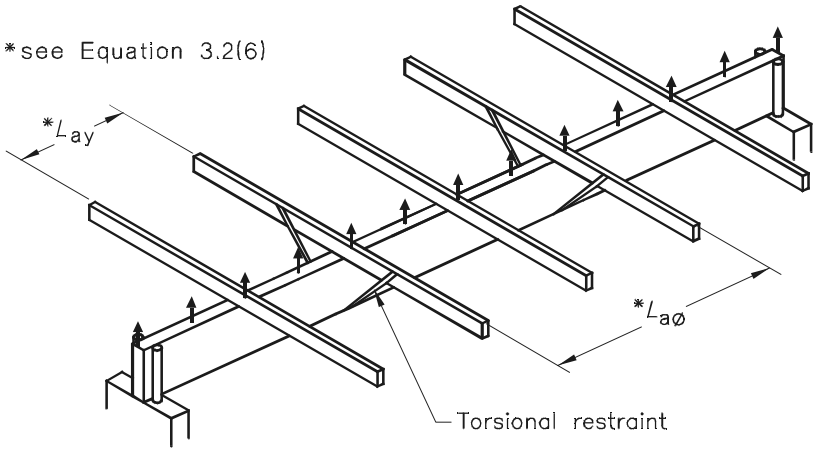

FIGURE 3.6 CONTINUOUS RESTRAINT ALONG THE TENSION EDGE COMBINED WITH DISCRETE TORSIONAL RESTRAINTS

(c) *Beams that bend only about their minor axis* For all cases, the slenderness co-efficient, denoted by S_2, may be taken to be—

$$S_2 = 0.0 \qquad \ldots 3.2(9)$$

(d) *Beams that bend about both axis* The design of such beams, described in Clause 3.2.1.2, is based on an interaction of the two special cases for bending about single axis only, and hence no special definition of slenderness is required for this case.

3.2.4 Stability factor

The stability factor k_{12} for modification of the characteristic strength in bending shall be given by the following:

(a) For $\rho_b S_1 \le 10$—

$$k_{12} = 1.0 \qquad \ldots 3.2(10a)$$

(b) For $10 \le \rho_b S_1 \le 20$—

$$k_{12} = 1.5 - 0.05\rho_b S_1 \qquad \ldots 3.2(10b)$$

(c) For $\rho_b S_1 \ge 20$—

$$k_{12} = \frac{200}{(\rho_b S_1)^2} \qquad \ldots 3.2(10c)$$

For bending about the minor axis, where S_2 equals 0 then k_{12} equals 1.0.

Accessed by SWINBURNE UNIVERSITY OF TECHNOLOGY on 15 Aug 2007

@Seismicisolation

@Seismicisolation

Conservative values of the material constant ρ_b for F-grade materials are given in Table 3.1. More accurate values of ρ_b are given by Equations E2(1) and E2(2) and tabulated for F grades in Paragraph E2 of Appendix E. The shape of the stability factor curve is illustrated in Figure 3.7.

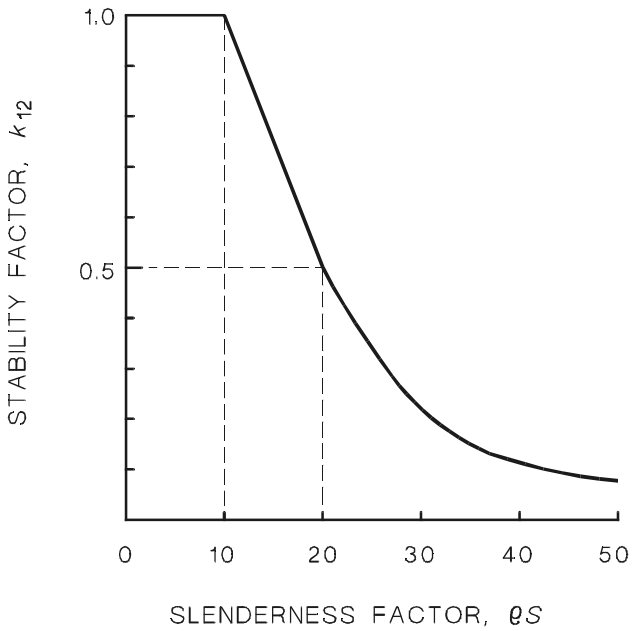

FIGURE 3.7 EFFECT OF SLENDERNESS COEFFICIENT ON THE STABILITY FACTOR FOR BEAMS AND COLUMNS

TABLE 3.1

MATERIAL CONSTANT ρ_b FOR F-GRADE BEAMS

F-grade	Material constant ρ_b	
	Seasoned timber	Unseasoned timber
F34	1.22	1.31
F27	1.17	1.27
F22	1.14	1.23
F17	1.07	1.17
F14	1.04	1.13
F11	1.04	1.13
F8	0.94	1.04
F7	0.91	1.01
F5	0.87	0.97
F4	0.84	0.93

NOTE: Appropriate values of ρ_b for GL grades, LVL, MGP grades, and A17 stress grade are given in Clauses 7.4.5 and 8.4.8 and in Appendix H respectively.

For large beams, where a size factor $k_{11} < 1.0$ is used either for solid beams or the tension flanges of built-up beams, the material constant ρ_b inserted in Equations 3.2(10b) and 3.2(10c) above may be replaced by ρ_b^* where—

$$\rho_b^* = \rho_b \sqrt{k_{11}} \qquad \ldots 3.2(11)$$

Accessed by SWINBURNE UNIVERSITY OF TECHNOLOGY on 15 Aug 2007

@Seismicisolation

@Seismicisolation

For large columns, where a size factor $k_{11} < 1.0$ is used either for solid columns or the tension flanges of built-up columns, the material constant ρ_b inserted in Equations 3.2(10b) and 3.2(10c) above may be replaced by ρ_b^* where—

$$\rho_b^* = \rho_b \sqrt{k_{11}} \qquad \ldots 3.2(12)$$

3.2.5 Flexural shear strength

The design capacity in shear, (ϕV), of unnotched beams, for strength limit state, shall satisfy—

$$(\phi V) \geq V^* \qquad \ldots 3.2(17)$$

where

$$(\phi V) = \phi\, k_1\, k_4\, k_6\, k_{11} \left[f_s'\, A_s \right] \qquad \ldots 3.2(16)$$

and

V^* = design action effect in shear (see Clause 1.5.2.2)

ϕ = capacity factor (see Clause 2.3)

k_1, k_4, k_6, k_{11} = the modification factors given in Section 2

f_s' = characteristic strength in shear (see Table 2.4)

A_s = shear plane area (for a rectangular beam loaded about its major axis in bending, $A_s = ⅔(bd)$ where b equals the breadth and d equals the depth of the beam).

In calculating the design action effect in shear, the design loads lying within a distance of 1.5 times the depth of the beam from the inside face of the support may be disregarded, except in the design of notched beams (see Appendix E).

3.2.6 Bearing strength

3.2.6.1 *Design capacity in bearing perpendicular to the grain*

The design capacity in bearing perpendicular to the grain, (ϕN_p), of a structural element (see Figure 3.8), for strength limit state, shall satisfy—

$$(\phi N_p) \geq N_p^* \qquad \ldots 3.2(15)$$

where

$$(\phi N_p) = \phi\, k_1\, k_4\, k_6\, k_7 \left\lfloor f_p'\, A_p \right\rfloor \qquad \ldots 3.2(16)$$

and

ϕ = capacity factor (see Clause 2.3)

N_p^* = design load effect in bearing (see Figure 3.8 and Clause 1.5.2.2)

k_1 to k_7 = the modification factors given in Section 2

f_p' = characteristic strength in bearing perpendicular to grain (see Table 2.3(A))

A_p = bearing area for loading perpendicular to grain.

Accessed by SWINBURNE UNIVERSITY OF TECHNOLOGY on 15 Aug 2007

@Seismicisolation

@Seismicisolation

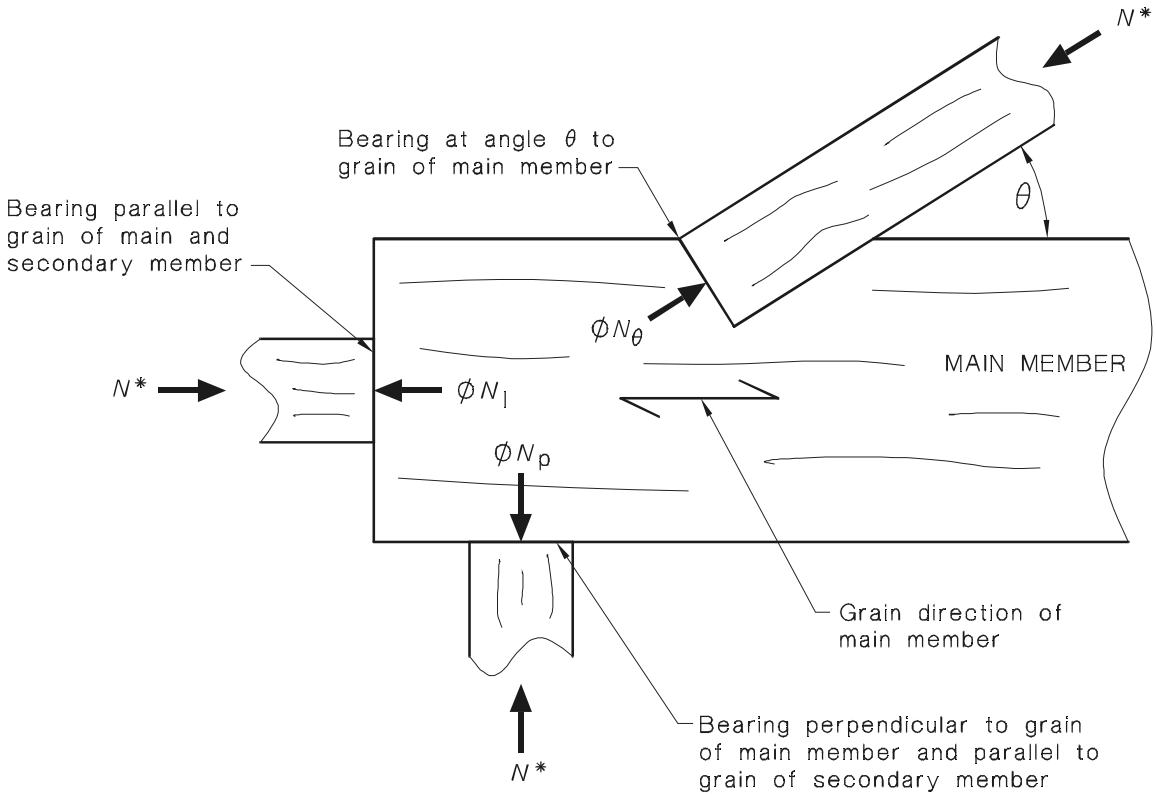

FIGURE 3.8 NOTATION FOR BEARING

3.2.6.2 *Design capacity in bearing parallel to grain*

The design capacity in bearing parallel to the grain, (ϕN_l) of a structural element (see Figure 3.8), for strength limit state, shall satisfy—

$$(\phi N_l) \geq N_\ell^* \qquad \ldots 3.2(17)$$

where

$$(\phi N_l) = \phi\, k_1\, k_4\, k_6\, [f'_\ell\, A_\ell] \qquad \ldots 3.2(18)$$

and

N_ℓ^* = design load effect in bearing (see Figure 3.8 and Clause 1.5.2.2)

ϕ = capacity factor (Clause 2.3)

k_1, k_4, k_6 = the modification factors given in Section 2

f'_ℓ = characteristic strength in bearing parallel to grain (see Table 2.3(A))

A_ℓ = bearing area for loading parallel to grain.

3.2.6.3 *Design bearing capacity at an angle to grain*

The design capacity, (ϕN_θ), in bearing at an angle θ to the grain of wood is given by—

$$(\phi N_\theta) = \frac{(\phi N_\ell)(\phi N_p)}{(\phi N_\ell)\sin^2\theta + (\phi N_p)\cos^2\theta} \qquad \ldots 3.2(19)$$

where

(ϕN_θ) = design bearing capacity at an angle to the grain of wood, see Figure 3.8

(ϕN_l) = design capacity in bearing parallel to grain, see Clause 3.2.6.2

(ϕN_p) = design capacity in bearing perpendicular to grain, see Clause 3.2.6.1

Accessed by SWINBURNE UNIVERSITY OF TECHNOLOGY on 15 Aug 2007

@Seismicisolation

@Seismicisolation

3.2.7 Strength of notched beams

Requirements for the design strength in notched beams are given in Appendix E.

3.2.8 Concentrated loads and partial area loads on grid systems

A method to assist in the design of floor grid systems to resist concentrated and partial area loads is given in Appendix E.

3.3 COLUMN DESIGN

3.3.1 Compressive strength

3.3.1.1 *Design compressive capacity parallel to grain*

The design capacity in compression parallel to the grain, (ϕN_c), of unnotched columns, for strength limit state, shall satisfy—

$$(\phi N_c) \geq N_c^* \qquad \ldots 3.3(1)$$

where

$$(\phi N_c) = \phi\, k_1\, k_4\, k_6\, k_{11}\, k_{12} \left[f_c'\, A_c \right] \qquad \ldots 3.3(2)$$

and

N_c^* = design action effect in compression (see Clause 1.5.2.2)

ϕ = capacity factor (see Clause 2.3)

k_1 to k_{11} = the modification factors given in Section 2

k_{12} = stability factor (see Clause 3.3.3)

f_c' = characteristic strength in compression parallel to grain

A_c = cross-sectional area of column.

3.3.1.2 *Buckling about both axes*

For columns that can buckle about both axes, the strength limit states shall satisfy—

$$(\phi N_{cx}) \geq N_c^* \qquad \ldots 3.3(3)$$

And

$$(\phi N_{cy}) \geq N_c^* \qquad \ldots 3.3(4)$$

Where

(ϕN_{cx}) and (ϕN_{cy}) = design capacity in compression for buckling about the major x-axis and minor y-axis respectively, determined in accordance with Clauses 3.3.1.1 and 3.3.1.2, respectively.

Accessed by SWINBURNE UNIVERSITY OF TECHNOLOGY on 15 Aug 2007

@Seismicisolation

@Seismicisolation

TABLE 3.2

EFFECTIVE LENGTH FACTOR g_{13}, FOR COLUMNS WITHOUT INTERMEDIATE LATERAL RESTRAINT

Condition of end restraint	Effective length factor (g_{13})
Flat ends	0.7
Restrained at both ends in position and direction	0.7
Each end held by two bolts (substantially restrained)	0.75
One end fixed in position and direction, the other restrained in position only	0.85
Studs in light framing	0.9
Restrained at both ends in position only	1.0
Restrained at one end in position and direction and at the other end partially restrained in direction but not in position	1.5
Restrained at one end in position and direction but not restrained in either position or direction at other end	2.0

NOTE: 'Flat ends' refers to perfectly flat ends bearing on flat unyielding bases.

3.3.2 Slenderness coefficient for lateral buckling under compression

3.3.2.1 *General*

For the general case, and for several useful specific cases, equations for evaluating the slenderness coefficient are given in Paragraph E4, Appendix E. For the case of solid columns of rectangular cross-section as shown in Figure 3.1, the simple approximations given in Clause 3.3.2.2 may be used.

3.3.2.2 *Columns of rectangular cross-section*

For columns of rectangular cross-section, the slenderness coefficients may be taken as follows:

(a) *Slenderness coefficient for buckling about the major axis* For the case of discrete restraint systems, the slenderness coefficient, denoted by S_3, shall be taken to be the lesser of the following:

$$S_3 = \frac{L_{ax}}{d} \qquad \text{. . . 3.3(5)}$$

and

$$S_3 = \frac{g_{13}L}{d} \qquad \text{. . . 3.3(6)}$$

where

L_{ax} = the distance between points of effectively rigid restraint between which bending about the major (x) axis would be produced by buckling under load. See Figure 3.9

g_{13} = the coefficient given in Table 3.2.

For restraint systems that restrain movement in the direction of the y-axis, and are continuous along the length of the column, the slenderness coefficient may be taken to be—

$$S_3 = 0.0 \qquad \text{. . . 3.3(7)}$$

Accessed by SWINBURNE UNIVERSITY OF TECHNOLOGY on 15 Aug 2007

@Seismicisolation

@Seismicisolation

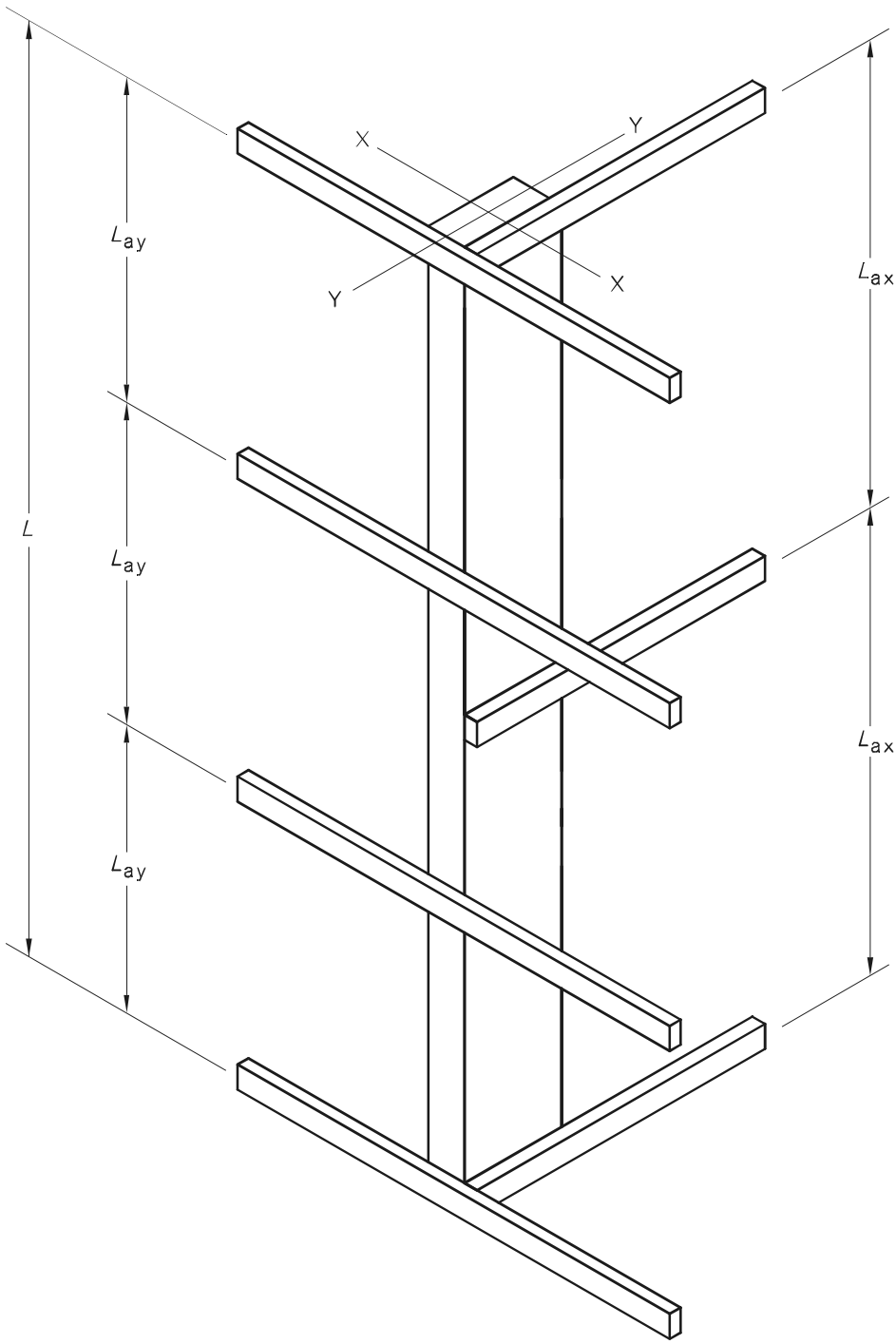

FIGURE 3.9 NOTATION FOR COLUMN RESTRAINTS

(b) *Slenderness coefficient for buckling about the minor axis* For discrete restraint systems, the slenderness coefficient, denoted by S_4, may be taken to be the lesser of the following:

$$S_4 = \frac{L_{ay}}{b} \qquad \text{. . . 3.3(8)}$$

and

$$S_4 = \frac{g_{13}L}{b} \qquad \text{. . . 3.3(9)}$$

Accessed by SWINBURNE UNIVERSITY OF TECHNOLOGY on 15 Aug 2007

@Seismicisolation

@Seismicisolation

fhere

L_{ay} = the distance between points of effectively rigid restraint between which bending about the minor (y) axis would be produced by buckling under load. See Figure 3.9

g_{13} = the coefficient given in Table 3.2.

For restraint systems that act continuously along one edge only and which restrain movement in the direction of the x-axis, the slenderness coefficient may be taken to be—

$$S_4 = \frac{3.5d}{b} \qquad \text{. . . 3.3(10)}$$

(c) *Columns that can bend about both axes* The design of such columns, described in Clause 3.3.1.2, is based on an interaction of the two special cases for bending about single axes only, and hence no special definition of slenderness is required for this case.

3.3.3 Stability factor

The stability factor k_{12} for modification of the characteristic strength in compression shall be given by the following:

(a) For $\rho_c S \leq 10$—

$$k_{12} = 1.0 \qquad \text{. . . 3.3(11a)}$$

(b) For $10 \leq \rho_c S \leq 20$—

$$k_{12} = 1.5 - 0.05\,\rho_c S \qquad \text{. . . 3.3(11b)}$$

(c) For $\rho_c S \geq 20$—

$$k_{12} = \frac{200}{(\rho_c S)^2} \qquad \text{. . . 3.3(11c)}$$

where

S = S_3 for buckling about the major axis

= S_4 for buckling about the minor axis

and where a conservative value of the material constant ρ_c is given in Table 3.3; more accurate values of ρ_c are given by Equations E2(3) and E2(4) and tabulated in Tables E3 and E4, Appendix E. The shape of the stability factor curve is illustrated in Figure 3.7.

TABLE 3.3

MATERIAL CONSTANT ρ_c FOR F-GRADE COLUMNS

F-grade	Material constant ρ_c	
	Seasoned timber	Unseasoned timber
F34	1.25	1.43
F27	1.22	1.39
F22	1.20	1.37
F17	1.16	1.33
F14	1.10	1.26
F11	1.07	1.24
F8	1.04	1.20
F7	0.98	1.14
F5	0.94	1.10
F4	0.91	1.07

NOTE: Appropriate values of ρ_b for GL grades, LVL and MGP grades, and A17 stress grade are given in Clauses 7.4.5 and 8.4.8 and in Appendix H respectively.

Accessed by SWINBURNE UNIVERSITY OF TECHNOLOGY on 15 Aug 2007

@Seismicisolation

@Seismicisolation

3.3.4 Strength of notched columns

The appropriate design procedure for notched columns shall be as given in Appendix E.

3.3.5 Spaced columns

The slenderness coefficients required for computing the design axial strength of spaced columns shall be as given in Appendix E.

3.4 TENSION MEMBER DESIGN

3.4.1 Design tensile capacity parallel to grain

The design capacity in tension parallel to grain, (ϕN_t), of unnotched tension members, for strength limit state, shall satisfy—

$$(\phi N_t) \geq N_t^* \qquad \ldots 3.4(1)$$

where

A2 $$(\phi N_t) = \phi\, k_1\, k_4\, k_6\, k_{11}\, [f_t'\, A_t] \qquad \ldots 3.4(2)$$

and

N_t^* = design action effect produced by strength limit states design loads (tension parallel to grain) (see Clause 1.5.2.2)

ϕ = capacity factor (see Clause 2.3)

k_1 to k_{11} = modification factors given in Section 2

f_t' = characteristic strength in tension parallel to grain

A_t = net cross-sectional area of tension member.

3.4.2 Notched tension members

The appropriate design procedure for the design of notched tension members is given in Appendix E.

3.5 DESIGN CAPACITY IN TENSION PERPENDICULAR TO GRAIN

The design capacity in tension perpendicular to grain, (ϕN_{tp}), of unnotched members, for strength limit, shall satisfy—

$$(\phi N_{tp}) \geq N_p^* \qquad \ldots 3.5(1)$$

where

$$(\phi N_{tp}) = \phi\, k_1\, k_{11}\, [f_{tp}'\, A_{tp}] \qquad \ldots 3.5(2)$$

and

N_{tp}^* = design action effect produced by strength limit states design loads (tension perpendicular to grain) (see Clause 1.5.2.2)

ϕ = capacity factor (see Clause 2.3)

k_1, k_{11} = modification factors given in Section 2

f_{tp}' = characteristic strength in tension perpendicular to grain (see Table 2.3(B))

A_{tp} = member width (thickness) by effective length stressed in tension. Refer to Figure 3.10. This is the effective area resisting tension perpendicular to the grain.

Accessed by SWINBURNE UNIVERSITY OF TECHNOLOGY on 15 Aug 2007

@Seismicisolation

@Seismicisolation

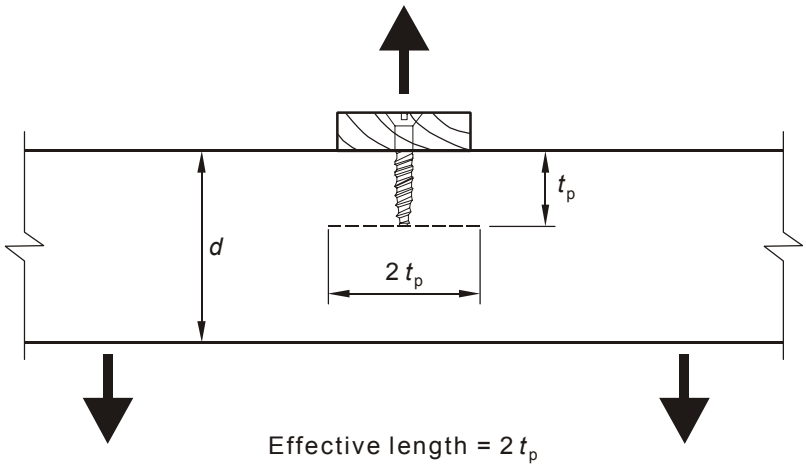

(a) Fixed at one point

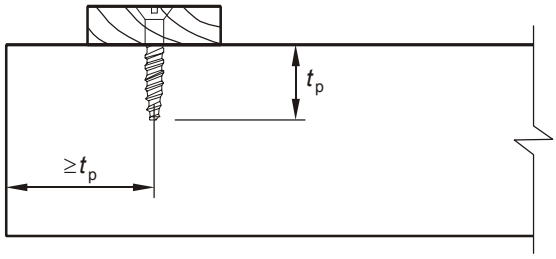

(b) Minimum end distance

FIGURE 3.10 EFFECTIVE LENGTH STRESSED IN TENSION PERPENDICULAR TO GRAIN

3.6 COMBINED BENDING AND AXIAL ACTIONS

3.6.1 Combined bending and compression

Rectangular members with cross-section as shown in Figure 3.1 subject to combined axial compression and bending about the x-axis only, shall be proportioned so that—

A2

$$\left(\frac{M_x^*}{\phi M_x}\right)^2 + \left(\frac{N_c^*}{\phi N_{cy}}\right) \leq 1 \qquad \ldots 3.6(1)$$

and

$$\left(\frac{M_x^*}{\phi M_x}\right) + \left(\frac{N_c^*}{\phi N_{cx}}\right) \leq 1 \qquad \ldots 3.6(2)$$

where

M_x^* = design action effect in bending about a beam's major principal x-axis

(ϕM_x) = design capacity in bending about a beam's major principal x-axis, Clause 3.2.1.1

N_c^* = design action effect of the design loads acting in compression, Clause 1.5.2.2

(ϕN_{cy}) = design capacity in compression for buckling about the major y-axis

(ϕN_{cx}) = design capacity in compression for buckling about the major x-axis.

Accessed by SWINBURNE UNIVERSITY OF TECHNOLOGY on 15 Aug 2007

@Seismicisolation

@Seismicisolation

NOTE: Equations 3.6(1) and 3.6(2) contain an allowance for the effect of bending moment amplification due to the axial load. For non-rectangular members, Equations 3.6(1) and 3.6(2) may be used in the absence of other information.

For the unusual case of a beam-column subjected to bending simultaneously about both the x- and y-axes, a conservative criterion of strength is given in Appendix E.

3.6.2 Combined bending and tension

For a rectangular member subject to combined bending and tension design load effects shall be proportioned so that—

$$\left(\frac{k_{12}M^*}{\phi M}\right)+\left(\frac{N_t^*}{\phi N_t}\right)\leq 1 \qquad \ldots 3.6(3)$$

and

A2

$$\left(\frac{M_x^*}{\phi M_x}\right)-\left(\frac{Z}{A}\,\frac{N_t^*}{\phi M_x}\right)\leq 1 \qquad \ldots 3.6(4)$$

where

k_{12} = stability factor used in bending strength calculation see Clause 3.2.4

M^* = design action effect in bending produced by the design loads about a beam's appropriate axis (see Clause 1.5.2.2)

(ϕM) = design capacity in bending about a beam's appropriate axis (see Clause 3.2.1.1)

N_t^* = design action effect produced by the strength limit states design loads acting in tension (see Clause 1.5.2.2)

(ϕN_t) = design capacity of a member in tension (see Clause 3.4.1.1)

M_x^* = design action effect in bending produced by the design loads about a beam's major principal axis (see Clause 3.2.1.1)

(ϕM_x) = design capacity in bending about a beam's major principal axis (see Clause 3.2.1.1)

Z = section modulus about the appropriate axis

A = cross-sectional area.

Accessed by SWINBURNE UNIVERSITY OF TECHNOLOGY on 15 Aug 2007

@Seismicisolation

@Seismicisolation

SECTION 4 DESIGN CAPACITY OF JOINTS IN TIMBER STRUCTURES

4.1 GENERAL

4.1.1 Scope of Section

This Section applies to joints in solid timber fabricated with mechanical fasteners and characterized by a long history of use in timber structures. These include joints fabricated with the following mechanical fasteners:

(a) Nails.

(b) Wood screws.

(c) Bolts.

(d) Coach screws.

(e) Split-ring fasteners.

(f) Shear-plate fasteners.

Joints with plywood and calculation of characteristic capacities for bolts are covered in Appendix C.

NOTES:

1 Appendix C gives further information on joints.

2 Testing of specialized and patented mechanical fasteners and variants of conventional fasteners is specified in AS 1649.

3 This Standard does not specifically cover glued timber-to-timber or timber-to-plywood connections as occur in fabricated components such as stressed skin panels or plywood webbed beams. In such cases, joint design can be based on the timber components in the connection, provided that the joint is fabricated using a rigid, durable adhesive. Phenolic type adhesives meet these requirements. The design of fabricated components comprising glued connections is therefore based on the fact that with correct bonding practice and quality control, a joint is developed in which the adhesive bond strength and durability will be superior to the timber components comprising the joint.

4 Information on methods for assessing the deformation of joints is given in Paragraph C3.

4.1.2 Joint groups

For the purpose of joint design, timber species have been classified into six joint groups: J1, J2, J3, J4, J5 and J6 for unseasoned timber, and JD1, JD2, JD3, JD4, JD5 and JD6 for seasoned timber. The joint group classifications for specific timbers are shown in Tables 2.1 and 2.2.

Where a joint comprises more than one species of timber, the design capacity of the joint shall be calculated, in the absence of other information, using the fastener's characteristic capacity appropriate to the weakest species in the joint, that is, the species in the joint having the lowest joint group classification. Where it is possible to determine the capacity of each part of the joint independently then the joint capacity may be taken as the lesser of the capacities of the individual parts.

4.1.3 Joint types

For the purpose of joint design, joints have been classified as follows into two types according to whether the fastener will be subjected to a shear load or an axial load when subject to the action of the design loads:

(a) *Type 1 joint* Fasteners subject to shear loads—the design loads may be applied in either side or end grain. See Figures 4.1(a) 4.2(a) and (b).

@Seismicisolation

Accessed by SWINBURNE UNIVERSITY OF TECHNOLOGY on 15 Aug 2007

@Seismicisolation

(b) *Type 2 joint* Fasteners subject to axial loads—the design loads may be applied in either side or end grain. See Figures 4.1(b) and 4.4(a), (b) and (c).

NOTE: Where timber elements experience tension perpendicular to the grain, reference should be made to Clause 3.5.

Design capacities for Type 1 and Type 2 joints of various configurations are given in the following sections.

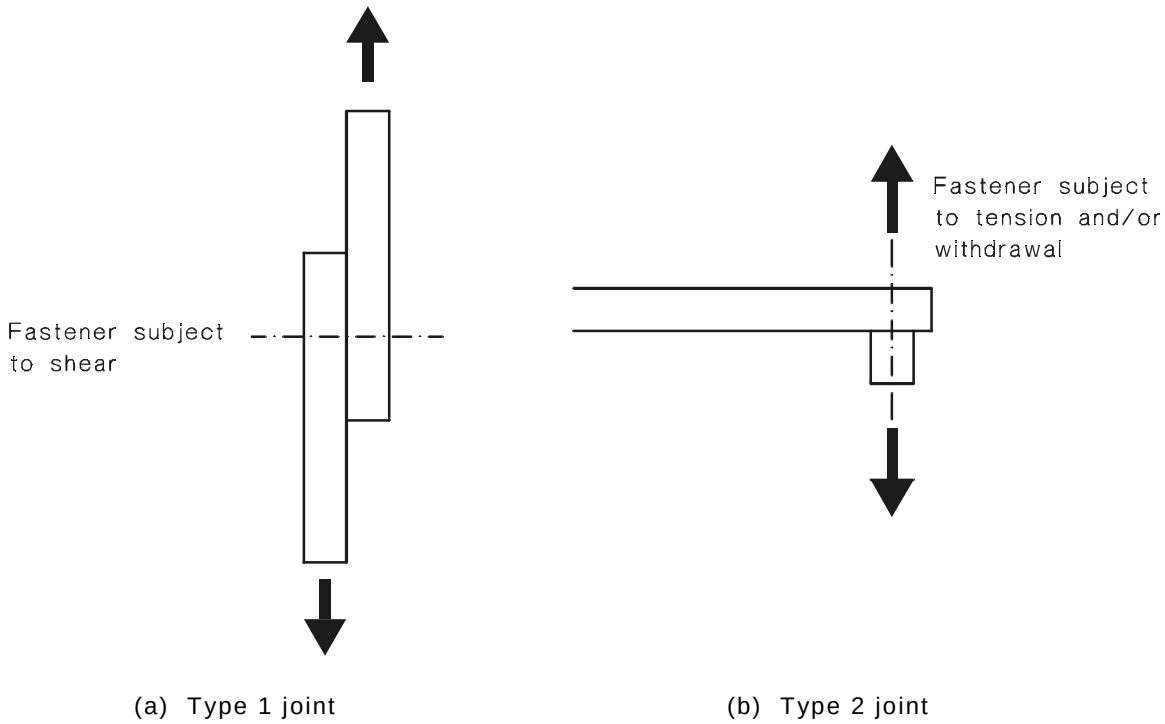

FIGURE 4.1 JOINT TYPES

4.1.4 Timber grade

Characteristic capacities for fasteners have been based on the assumption that there are no large strength-reducing characteristics visible near any fastener. Therefore no allowance for the stress grade of timber has been made in design data (characteristic capacities) for fasteners. Except for corewood, gross strength-reducing characteristics shall be avoided within the surrounding area in which fasteners are located, unless the characteristic capacities for fasteners have been reduced to allow for the effect that such strength-reducing characteristics may have on joint strength. The characteristic capacities for fasteners located in corewood shall be taken to be that of a timber whose joint group is one lower than the normal value for the species used.

4.1.5 Tendency to split

Special precautions shall be specified in the use of timber that has a tendency to split to an extent that may be detrimental to fastener strength (see Clauses 4.2.4 and 4.2.6). In the absence of other guidance, the criterion for tendency to split shall be based on the parameter α defined by—

$$\alpha = \varepsilon^2/\gamma \qquad \ldots 4.1(1)$$

where

ε = tangential shrinkage, in percent

γ = tangential cleavage strength of unseasoned timber, in newtons per millimetre, as measured by BS 373 or ASTM D143.

Accessed by SWINBURNE UNIVERSITY OF TECHNOLOGY on 15 Aug 2007

@Seismicisolation

@Seismicisolation

Species for which $\alpha > 0.8$ often have a high tendency to split, particularly in exposed locations; species for which $\alpha < 0.55$ may be considered to have a negligible tendency to split.

NOTES:

1 Most eucalypts and corymbias and most hardwoods of dry sclerophyll forests that have a basic density of less than 700 kg/m^3 have a splitting parameter $\alpha > 0.8$; most softwoods and most rainforest hardwoods have a splitting parameter $\alpha < 0.8$.

2 Information on shrinkage and cleavage strength for specific species can be obtained from the following:

(a) KINGSTON, R.S.T. and RISDON, C.J.E. *Shrinkage and Density of Australian and other South-west Pacific Woods*. Division of Forest Products Technological Paper No. 13, CSIRO, 1961.

(b) BUDGEN, B. *Shrinkage and Density of some Australian and South-east Asian Timbers*. Division of Building Research Technological Paper (Second Series) No. 38, CSIRO, 1981.

(c) BOLZA, E. and KLOOT, N.H. *The Mechanical Properties of 174 Australian Timbers*. Division of Forest Products Technological Paper No. 25, CSIRO, 1963.

4.1.6 Eccentric joints

When it is impracticable to ensure that all the members meeting at a joint are arranged symmetrically, with their centre-lines intersecting on a common axis which is also the axis of resistance of the fastener or group of fasteners, the combined effects of primary stresses and secondary stresses due to the resulting bending and shear stress shall be checked.

4.2 DESIGN OF NAILED JOINTS

4.2.1 General

The characteristic capacities for nails, listed in Tables 4.1 and 4.2, apply to plain shank low carbon steel nails, as specified in AS 2334.

4.2.2 Characteristic capacities for nails

4.2.2.1 General

The characteristic capacities for nails are applicable to resistance to load whether the load is applied parallel or perpendicular to the grain (see Figure 4.2) and are given in Clauses 4.2.2.2 to 4.2.2.5.

4.2.2.2 *Type 1 joints*

Characteristic capacities for Type 1 joints are as follows:

(a) *Lateral loads in side grain (see Figure 4.3(a))* The characteristic capacities for nails, whether driven by hand or nail gun, laterally loaded in single shear in the side grain of unseasoned timber are given in Table 4.1(A) and in seasoned timber are given in Table 4.1(B).

(b) *Lateral loads in end grain (see Figure 4.3(b))* The characteristic capacities for nails, whether driven by hand or nail gun, laterally loaded in single shear in the end grain of unseasoned and seasoned timber shall be taken as 60 percent of the values given in Tables 4.1(A) and 4.1(B) respectively.

NOTE: The modification factor k_{13} accounts for end grain effects in Equations 4.2(2) and 4.2(4). See Clause 4.2.3.2 and 4.2.3.3.

Accessed by SWINBURNE UNIVERSITY OF TECHNOLOGY on 15 Aug 2007

@Seismicisolation

@Seismicisolation

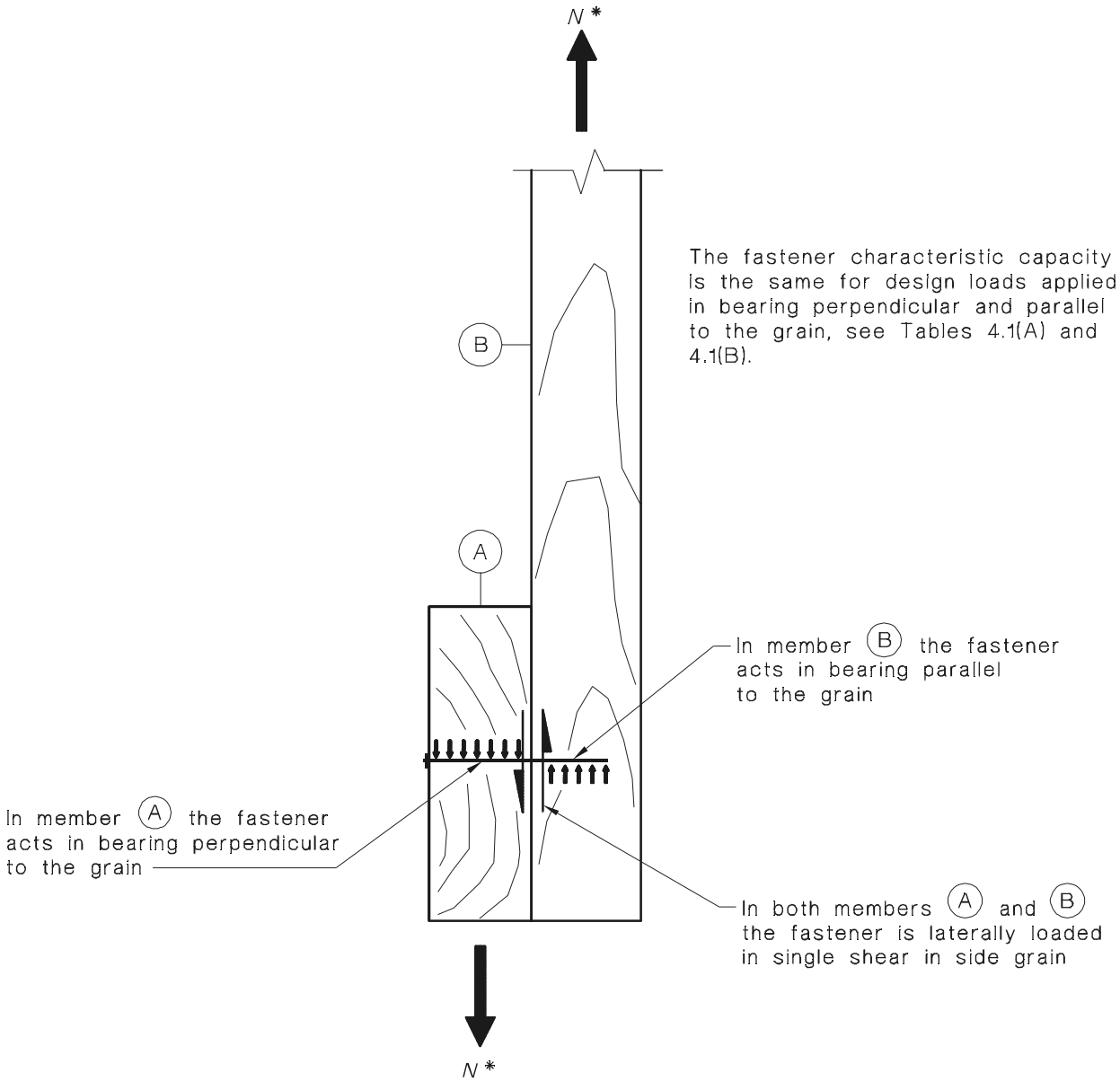

DIAGRAM ILLUSTRATES A TYPE 1 JOINT

FIGURE 4.2 FASTENER (NAIL OR SCREW) IN BEARING PERPENDICULAR AND PARALLEL TO THE GRAIN

Accessed by SWINBURNE UNIVERSITY OF TECHNOLOGY on 15 Aug 2007

@Seismicisolation

@Seismicisolation

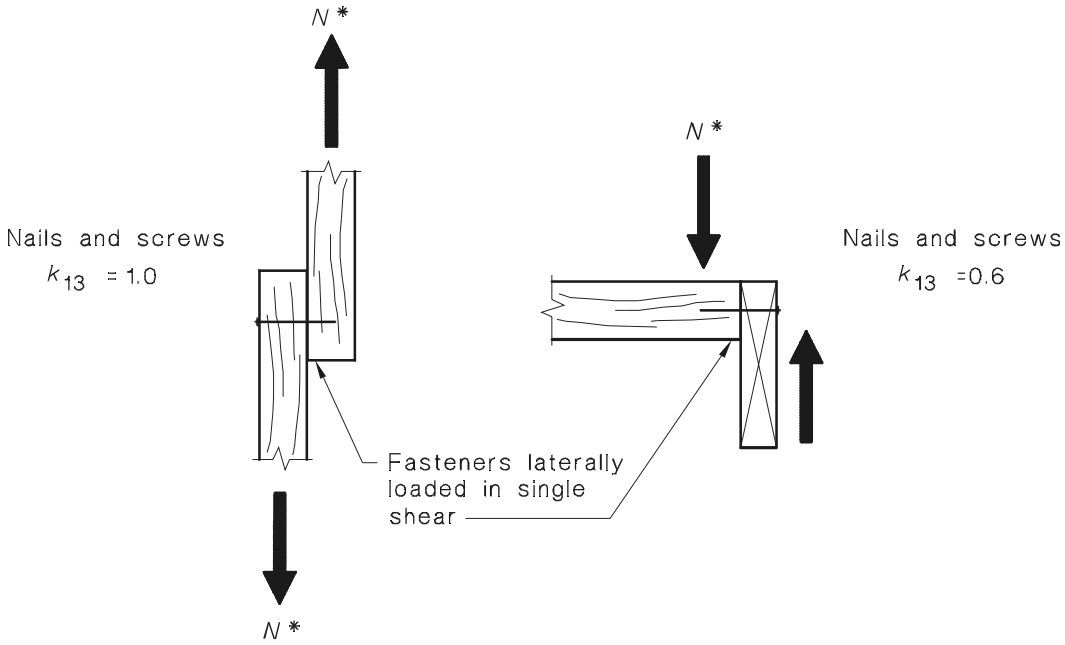

(a) Fastener in side grain (b) Fastener in end grain

FIGURE 4.3 TYPE 1 JOINTS FOR NAILS AND SCREWS LOADED IN SHEAR

TABLE 4.1(A)

CHARACTERISTIC CAPACITY, Q_k, FOR A SINGLE PLAIN SHANK STEEL NAIL LATERALLY LOADED IN SINGLE SHEAR IN SIDE GRAIN*— UNSEASONED TIMBER

Species group	Characteristic capacity per nail, N						
	Nail diameter, mm						
	2.5	2.8	3.15	3.75	4.5	5.0	5.6
J1	975	1180	1445	1960	2700	3245	3955
J2	765	930	1135	1550	2125	2565	3125
J3	545	665	810	1105	1520	1830	2225
J4	385	470	575	780	1075	1300	1595
J5	295	355	445	590	810	975	1180
J6	220	265	325	445	620	740	885

Accessed by SWINBURNE UNIVERSITY OF TECHNOLOGY on 15 Aug 2007

@Seismicisolation

@Seismicisolation

TABLE 4.1(B)

CHARACTERISTIC CAPACITY, Q_k, FOR A SINGLE PLAIN SHANK STEEL NAIL LATERALLY LOADED IN SINGLE SHEAR IN SIDE GRAIN*— SEASONED TIMBER

Species group	Characteristic capacity per nail, N						
	Nail diameter, mm						
	2.5	2.8	3.15	3.75	4.5	5.0	5.6
JDl	1285	1565	1920	2610	3570	4310	5250
JD2	975	1180	1445	1960	2700	3245	3955
JD3	765	930	1135	1550	2125	2565	3125
JD4	545	665	810	1110	1520	1830	2225
JD5	445	545	680	915	1255	1505	1830
JD6	340	415	500	695	945	1135	1385

NOTE: See Clause 4.2.5 for nail length and timber thicknesses.

4.2.2.3 *Type 2 joints*

Characteristic capacities for Type 2 joints are as follows:

(a) *Withdrawal loads from side grain (see Figure 4.4(a))* The characteristic capacities for nails, driven by hand only, in withdrawal from the side grain of unseasoned timber are given in Table 4.2(A) and in seasoned timber are given in Table 4.2(B).

NOTE: Withdrawal loads for gun-driven plain shank nails may be considerably less than withdrawal loads for the same nails driven by hand.

(b) *Withdrawal loads from end grain (see Figure 4.4(b))* The characteristic capacities for nails, driven by hand only, axially loaded in withdrawal from the end grain of unseasoned and seasoned timber, shall not exceed 25 percent of the values given in Tables 4.2(A) and 4.2(B) respectively. A minimum of two nails shall be used in end grain of Type 2 joints.

For skew driven nails (see Figure 4.4(c)), the characteristic capacities for nails in withdrawal from the end grain of unseasoned and seasoned timber shall not exceed 60 percent of the values given in Tables 4.2(A) and 4.2(B) respectively. A minimum of two (opposingly driven) nails shall be used in end grain of Type 2 joints.

NOTE: The modification factor k_{13} accounts for end grain effects in Equation 4.2(6). See Clause 4.2.3.4.

Accessed by SWINBURNE UNIVERSITY OF TECHNOLOGY on 15 Aug 2007

@Seismicisolation

@Seismicisolation

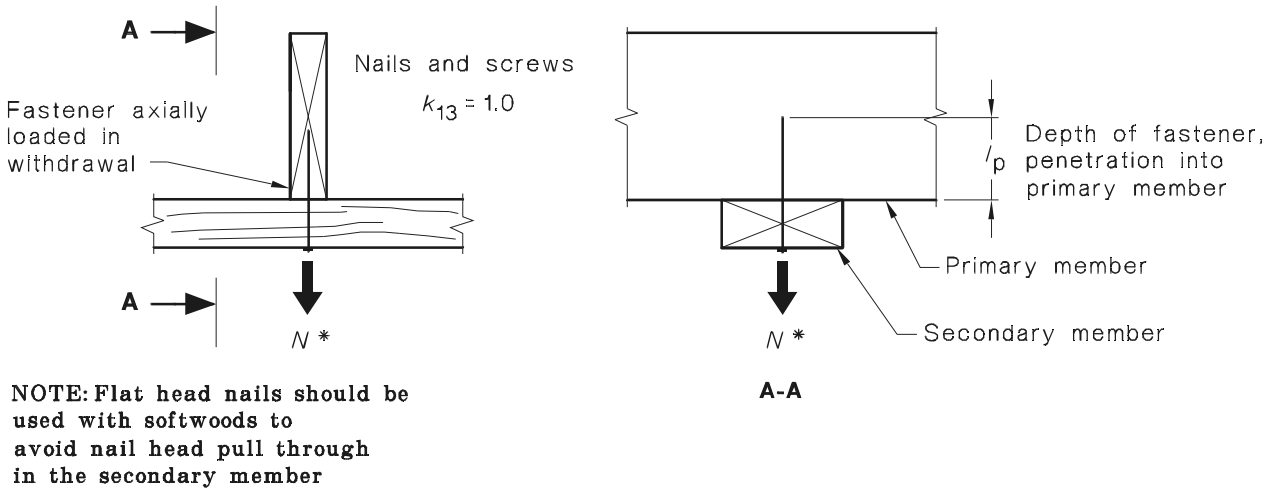

(a) Fastener in side grain

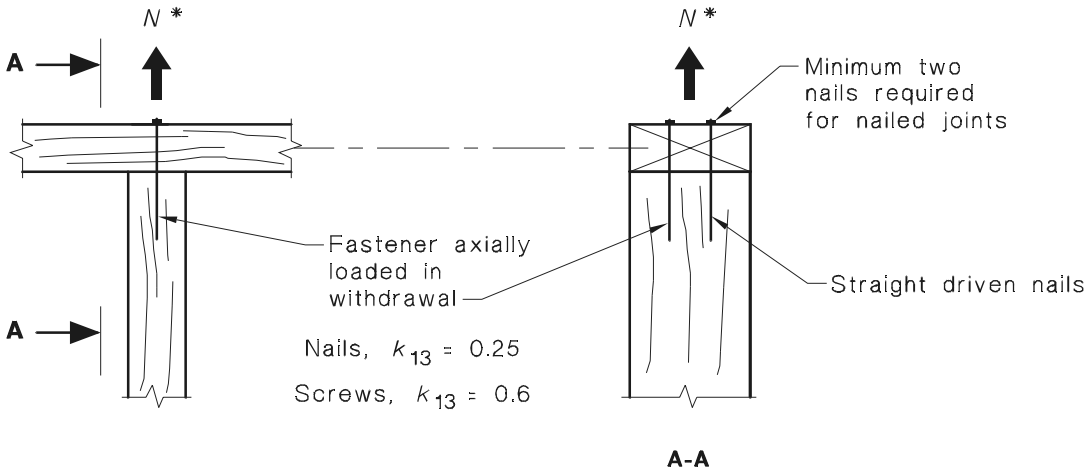

(b) Fastener in end grain

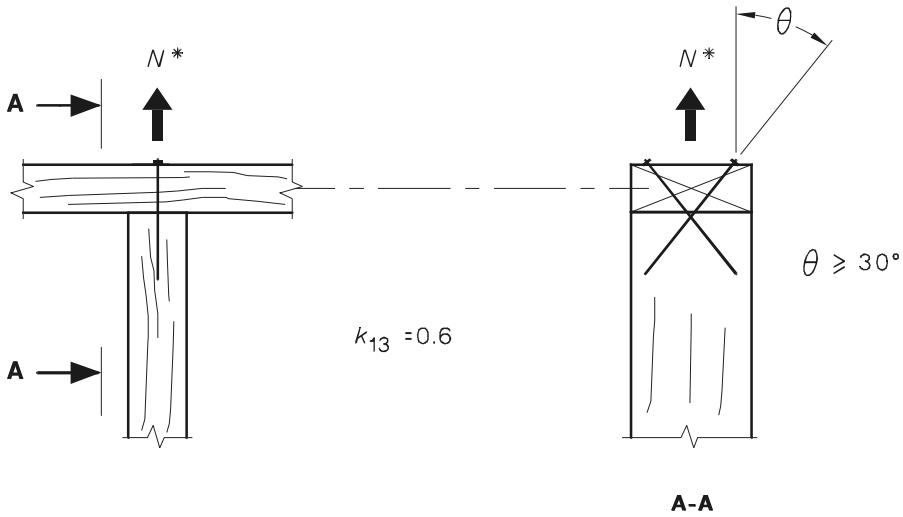

(c) Skew driven nails in end grain

FIGURE 4.4 TYPE 2 JOINTS FOR NAILS AND SCREWS (AND COACH SCREWS) LOADED IN WITHDRAWAL

@Seismicisolation

Accessed by SWINBURNE UNIVERSITY OF TECHNOLOGY on 15 Aug 2007

@Seismicisolation

TABLE 4.2(A)

CHARACTERISTIC CAPACITY, Q_k, FOR A SINGLE PLAIN SHANK STEEL NAIL IN WITHDRAWAL AXIALLY LOADED IN SIDE GRAIN—UNSEASONED TIMBER

Species group	Characteristic capacity, N per mm penetration of nail						
	Nail diameter, mm						
	2.5	2.8	3.15	3.75	4.5	5.0	5.6
J1	19	20	24	27	32	35	41
J2	15	17	19	22	27	30	34
J3	13	14	16	19	24	25	29
J4	11	13	14	17	20	22	25
J5	9.1	10	11	14	17	19	20
J6	6.8	7.6	8.6	10	12	14	15

TABLE 4.2(B)

CHARACTERISTIC CAPACITY, Q_k, FOR A SINGLE PLAIN SHANK STEEL NAIL IN WITHDRAWAL AXIALLY LOADED IN SIDE GRAIN—SEASONED TIMBER

Species group	Characteristic capacity, N per mm penetration of nail						
	Nail diameter, mm						
	2.5	2.8	3.15	3.75	4.5	5.0	5.6
JD1	29	32	35	42	51	57	64
JD2	20	22	25	29	35	39	44
JD3	13	14	16	19	24	25	29
JD4	8.3	9.3	10	13	15	17	19
JD5	5.2	5.9	6.6	7.9	9.5	11	12
JD6	3.7	4.2	4.7	5.6	6.8	7.6	8.5

4.2.3 Design capacity for nailed joints

4.2.3.1 *General*

The design capacity for Type 1 and Type 2 nailed joints shall be calculated in accordance with Clauses 4.2.3.2 and 4.2.3.3.

4.2.3.2 *Type 1 joint to resist direct loads*

The design capacity, (ϕN_j), for a Type 1 joint containing n nails designed to resist direct loads, as illustrated in Figure 4.5(a), for strength limit states shall satisfy—

$$(\phi N_j) \geq N^* \qquad \ldots 4.2(1)$$

where

$$(\phi N_j) = \phi\, k_1\, k_{13}\, k_{14}\, k_{16}\, k_{17}\, n\, Q_k \qquad \ldots 4.2(2)$$

and

N^* = design action effect on joint

ϕ = capacity factor (see Clause 2.3)

k_1 = the factor for duration of load for joints (see Clause 2.4.1.1)

k_{13} = 1.0 for nails in side grain, see Figure 4.3(a)

Accessed by SWINBURNE UNIVERSITY OF TECHNOLOGY on 15 Aug 2007

@Seismicisolation

@Seismicisolation

= 0.6 for nails in end grain, see Figure 4.3(b)

k_{14} = 1.0 for nails in single shear, see Figure 4.6

= 2.0 for nails in double shear, see Figure 4.6

k_{16} = 1.2 for nails driven through close fitting holes into metal side plates

= 1.1 for nails driven through plywood gussets

= 1.0 otherwise

k_{17} = factor for multiple nailed joints given in Table 4.3(A) for Type 1 joints designed to resist direct loads in either tension or compression

n = total number of nails in connection resisting design action effect in shear

Q_k = characteristic capacity given in Tables 4.1(A) and 4.1(B). See also Clauses 4.2.2 and 4.2.5.

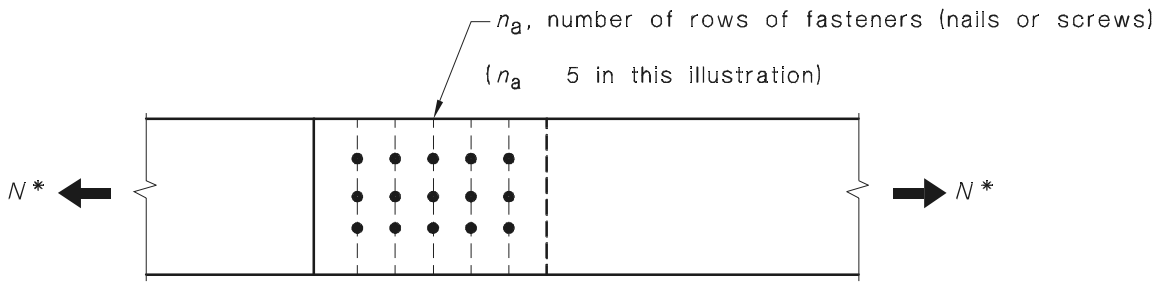

(a) Type 1 joint resisting direct loads

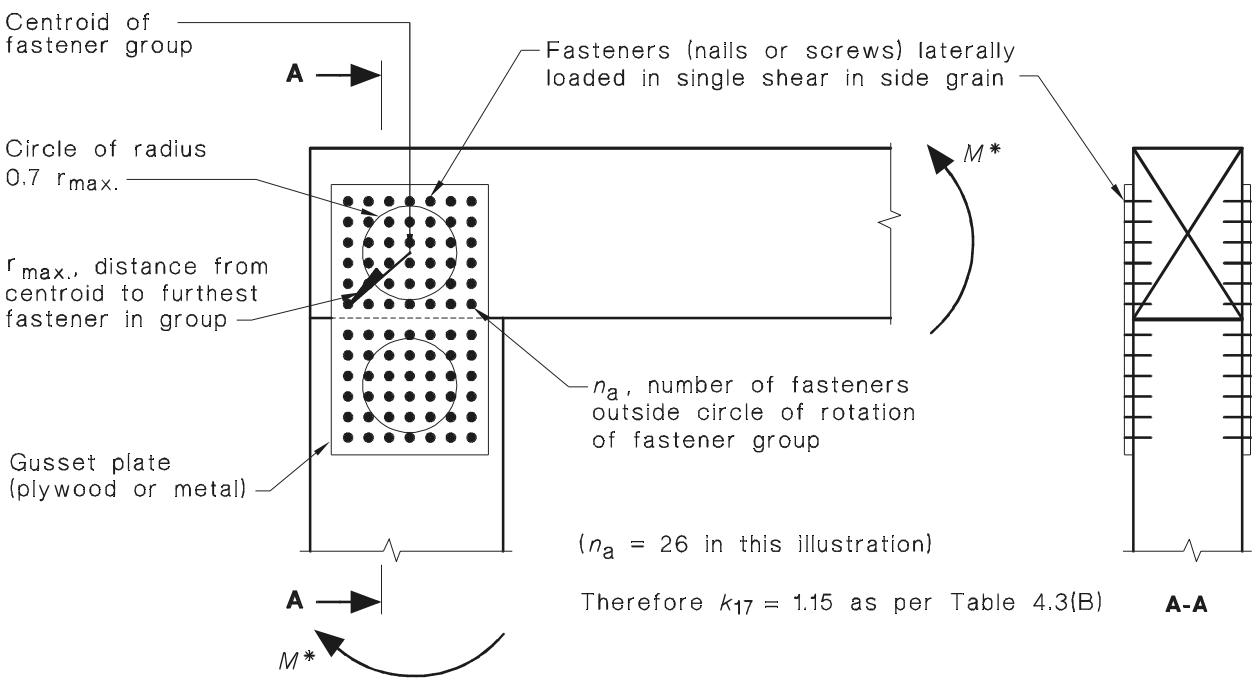

(b) Type 1 joint resisting in-plane moments

FIGURE 4.5 DETERMINATION OF MODIFICATION FACTOR k_{17} FOR USE IN THE DESIGN OF TYPE 1 JOINTS CONTAINING A MULTIPLE NUMBER OF FASTENERS (NAILS OR SCREWS)

Accessed by SWINBURNE UNIVERSITY OF TECHNOLOGY on 15 Aug 2007

@Seismicisolation

@Seismicisolation

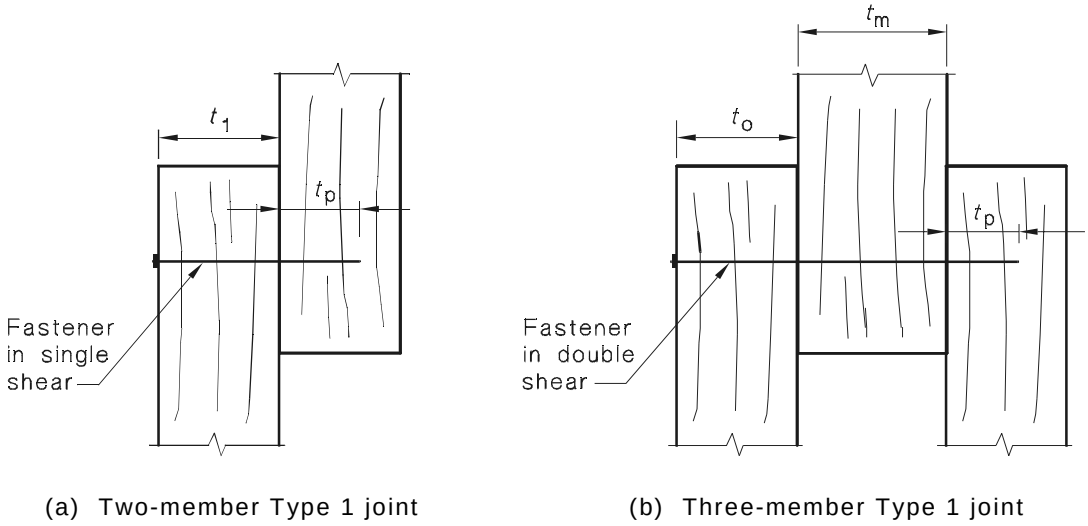

(a) Two-member Type 1 joint (b) Three-member Type 1 joint

FIGURE 4.6 TIMBER THICKNESSES AND FASTENER LENGTHS FOR NAILS, WOOD SCREWS AND COACH SCREWS

TABLE 4.3(A)

VALUES OF FACTOR k_{17} FOR USE IN THE DESIGN OF MULTIPLE NAIL AND SCREW JOINTS—TO RESIST DIRECT LOADS

Condition of timber	Values of k_{17}			
	Number of rows of fasteners*			
	$n_a \leq 4$	$n_a = 5$	$n_a = 10$	$n_a \geq 20$
Unseasoned	1.00	0.90	0.80	0.75
Seasoned	1.00	0.94	0.90	0.85

* n_a refers to the number of rows of fasteners.

TABLE 4.3(B)

VALUES OF FACTOR k_{17} FOR USE IN THE DESIGN OF MULTIPLE NAIL AND SCREW JOINTS—TO RESIST IN-PLANE MOMENTS

N_a†	k_{17}
2	1.00
5	1.05
10	1.10
20	1.15
100 or greater	1.20

† n_a refers to the number of nails per interface for which $r_i / r_{max.} \geq 0.7$.

4.2.3.3 *Type 1 joint to resist in-plane moment*

The design capacity, (ϕM_j), per shear plane interface for a Type 1 joint containing n nails designed to resist in-plane moment, as illustrated in Figure 4.5(b), for strength limit states shall satisfy—

$$(\phi M_j) \geq M^* \qquad \ldots 4.2(3)$$

Accessed by SWINBURNE UNIVERSITY OF TECHNOLOGY on 15 Aug 2007

@Seismicisolation

@Seismicisolation

where

$$(\phi M_j) = \phi\ k_1\ k_{13}\ k_{14}\ k_{16}\ k_{17}\ r_{max.}\ Q_k \left[\sum_{i=1}^{n} \left(\frac{r_i}{r_{max.}} \right)^{\frac{3}{2}} \right] \qquad \ldots 4.2(4)$$

and

M^* = design action effect on joint (in-plane moment)

ϕ = capacity factor (see Clause 2.3)

k_1 = the factor for duration of load for joints (see Clause 2.4.11)

k_{13} = 1.0 for nails in side grain, see Figure 4.3(a)
= 0.6 for nails in end grain, see Figure 4.3(b)

k_{14} = 1.0 for nails in single shear, see Figure 4.6
= 2.0 for nails in double shear, see Figure 4.6

k_{16} = 1.2 for nails driven through close fitting holes into metal side plates
= 1.1 for nails driven through plywood gussets
= 1.0 otherwise

k_{17} = factor for multiple nailed joints given in Table 4.3(B) for Type 1 joints to resist in-plane moments

$r_{max.}$ = the maximum value of r_i

Q_k = characteristic capacity given in Tables 4.1(A) and 4.1(B). See also Clauses 4.2.2 and 4.2.5

n = total number of nails in single shear per interface resisting the design in-plane moment

r_i = the distance from the *i*th nail to the centroid of the nail group.

4.2.3.4 *Type 2 joint*

The design capacity, (ϕN_j), for a Type 2 joint containing n nails designed to resist axial loads tending to cause withdrawal, as illustrated in Figure 4.4, for strength limit states shall satisfy—

$$(\phi N_j) \geq N^* \qquad \ldots 4.2(5)$$

where

$$(\phi N_j) = \phi\ k_{13}\ l_p\ nQ_k \qquad \ldots 4.2(6)$$

and

N^* = design action effect in the axial direction of the fastener

ϕ = capacity factor (see Clause 2.3)

k_{13} = 1.0 for withdrawal from side grain (see Figure 4.4(a))
= 0.25 for withdrawal from end grain for straight driven nails (see Figure 4.4(b))
= 0.6 for withdrawal from end grain for skew driven nails, see Figure 4.4(c)

l_p = depth of nail penetration, in millimetres, into primary member (see Figure 4.4(a))

N = total number of nails in the joint

Q_k = characteristic capacity given in Tables 4.2(A) and 4.2(B). See also Clauses 4.2.2 and 4.2.5.

NOTE: The duration of load factor k_1 does not apply to nails subject to the action of withdrawal loads.

Accessed by SWINBURNE UNIVERSITY OF TECHNOLOGY on 15 Aug 2007

@Seismicisolation

@Seismicisolation

4.2.4 Spacing, edge and end distances

Table 4.4 provides recommended minimum spacings, edge and end distances for nails in terms of nail diameter *D*. For spacings at an angle to the grain, interpolation by means of Hankinson's formula may be used. Where it can be demonstrated that splitting will not occur, spacings and end distances less than those in Table 4.4 may be used.

NOTE: For timber that has a tendency to split (see Clause 4.1.5) some mitigation measures such as preboring or increased spacing are recommended (see Clause 4.2.6). The fabrication of prototype joints is a useful method of checking the efficacy of mitigation measures.

TABLE 4.4

MINIMUM SPACING, EDGE AND END DISTANCES FOR NAILS

Spacing type	Minimum distance	
	Holes not prebored	Holes prebored to 80% of nail diameter
End distance	20*D*	10*D*
Edge distance	5*D*	5*D*
Between nails		
—along grain	20*D*	10*D*
—across grain	10*D*	3*D*

4.2.5 Nail length and timber thickness

The characteristic capacities given in Tables 4.1(A) and 4.1(B) shall be applicable, where timber thicknesses and nail length as shown in Figure 4.5 are as follows:

(a) *Two-member joints (nails in single shear)* Thickness of first member, $t_l > 10D$; depth of penetration of nail into second member, $t_p > 10D$.

For lesser values of t_l and t_p, the basic load shall be reduced in proportion to the decrease in t_l or t_p (whichever gives the greater decrease), and the nails shall be considered as non-loadbearing if t_l or t_p is less than 5*D*.

NOTE: These limits do not apply to plywood. See Appendix C.

(b) *Three-member joints (nails in double shear)* Thickness of central member, $t_m > 10D$; thickness to outer member, $t_o > 7.5D$; depth of penetration of nail into outer member, $t_p > 7.5D$.

For lesser values of t_m, t_o and t_p, the basic load shall be reduced in proportion to the decrease in t_m, t_o and t_p (whichever gives the greatest decrease), and the nails shall be regarded as being in single shear if t_p is less than 5*D*.

NOTE: These limits do not apply to plywood. See Appendix C.

4.2.6 Avoidance of splitting

The characteristic capacities for nails have been derived on the assumption that splitting of the timber does not occur to any significant extent. In unseasoned timber that shows a marked tendency to split (see Clauses 4.1.5 and 4.2.4), the use of prebored holes of diameter 80 percent of the nail diameter is recommended.

4.3 DESIGN OF SCREWED JOINTS

4.3.1 General

The characteristic capacities for screws are listed in Tables 4.5 and 4.6. These capacities may also apply for type 17 self-drilling steel wood screws, manufactured in accordance with AS 3566.

Accessed by SWINBURNE UNIVERSITY OF TECHNOLOGY on 15 Aug 2007

@Seismicisolation

@Seismicisolation

4.3.2 Characteristic capacities for screws

4.3.2.1 *General*

The characteristic capacities for screws are applicable to design loads whether applied parallel or perpendicular to the grain (see Figure 4.3) and are given in Clauses 4.4.2.2 to 4.4.2.7.

4.3.2.2 *Type 1 joints*

Characteristic capacities for Type 1 joints are as follows:

(a) *Lateral loads in side grain, joint (see Figure 4.3(a))* The characteristic capacities for screws, whether driven by hand or machine, laterally loaded in single shear in the side grain of unseasoned timber are given in Table 4.5(A) and in seasoned timber are given in Table 4.5(B).

(b) *Lateral loads in end grain (see Figure 4.3(b))* The characteristic capacities for screws, whether driven by hand or machine, laterally loaded in single shear in the end grain of unseasoned and seasoned timber shall be taken as 60 percent of the values given in Tables 4.5(A) and 4.5(B) respectively.

NOTE: The modification factor k_{13} accounts for end grain effects in Equations 4.3(2) and 4.3(4). See Clauses 4.3.3.2 and 4.3.3.3.

4.3.2.3 *Type 2 joints*

Characteristic capacities for Type 2 joints shall be as follows:

(a) *Withdrawal loads from side grain (see Figure 4.4(a))* The characteristic capacities for screws, driven by hand or machine, axially loaded in withdrawal from the side grain of unseasoned timber are given in Table 4.6(A) and in seasoned timber are given in Table 4.6(B).

(b) *Withdrawal loads from end grain (see Figure 4.4(b))* The characteristic capacities for screws, driven by hand or machine, axially loaded in withdrawal from the end grain of unseasoned and seasoned timber shall not exceed 60 percent of the values given in Tables 4.6(A) and 4.6(B) respectively.

NOTE: The modification factor k_{13} accounts for end grain effects in Equation 4.3(6). See Clause 4.3.3.4.

4.3.2.4 *Maximum tensile load capacity*

The maximum tensile load capacity for a screw subject to direct axial loading shall not exceed the value appropriate to the diameter and metal from which the screw is manufactured as given in Table 4.7.

4.3.2.5 *Interpolation*

The characteristic capacity for other screw diameters may be obtained by linear interpolation in Tables 4.5(A), 4.5(B), 4.6(A), 4.6(B) and 4.7.

NOTE: For Type 17 screws, screw size number may be used to select capacity.

Accessed by SWINBURNE UNIVERSITY OF TECHNOLOGY on 15 Aug 2007

@Seismicisolation

@Seismicisolation

TABLE 4.5(A)

CHARACTERISTIC CAPACITY FOR A SINGLE SCREW IN SIDE GRAIN LATERALLY LOADED IN SINGLE SHEAR—UNSEASONED TIMBER

Joint group	Characteristic capacity per screw, N						
	Screw size number						
	4	6	8	10	12	14	18
	Shank diameter, mm						
	2.74	3.45	4.17	4.88	5.59	6.3	7.72
J1	1 280	1 950	2 700	3 570	4 520	5 560	7 950
J2	1 010	1 520	2 120	2 800	3 570	4 380	6 270
J3	710	1 080	1 520	2 020	2 530	3 130	4 480
J4	510	780	1 080	1 420	1 790	2 220	3 170
J5	370	570	780	1 010	1 310	1 620	2 290
J6	240	370	510	670	840	1 040	1 480

TABLE 4.5(B)

CHARACTERISTIC CAPACITY FOR A SINGLE SCREW IN SIDE GRAIN LATERALLY LOADED IN SINGLE SHEAR—SEASONED TIMBER

Joint group	Characteristic capacity per screw, N						
	Screw size number						
	4	6	8	10	12	14	18
	Shank diameter, mm						
	2.74	3.45	4.17	4.88	5.59	6.3	7.72
JD1	1 720	2 560	3 570	4 720	6 000	7 380	10 550
JD2	1 280	1 950	2 700	3 570	4 520	5 560	7 950
JD3	1 010	1 520	2 120	2 800	3 570	4 380	6 270
JD4	710	1 080	1 520	2 020	2 530	3 130	4 480
JD5	510	780	1 080	1 420	1 790	2 220	3 170
JD6	370	570	780	1 010	1 310	1 620	2 290

TABLE 4.6(A)

CHARACTERISTIC CAPACITY FOR A SINGLE SCREW IN SIDE GRAIN LOADED IN WITHDRAWAL—UNSEASONED TIMBER

Joint group	Characteristic capacity per screw, N per mm penetration of thread						
	Screw size number						
	4	6	8	10	12	14	18
	Shank diameter, mm						
	2.74	3.45	4.17	4.88	5.59	6.3	7.72
J1	56	71	85	100	116	129	158
J2	42	54	66	77	87	100	122
J3	33	41	50	58	66	75	91
J4	23	31	37	42	48	54	68
J5	19	25	29	35	41	44	54
J6	15	19	23	27	31	35	42

Accessed by SWINBURNE UNIVERSITY OF TECHNOLOGY on 15 Aug 2007

@Seismicisolation

@Seismicisolation

TABLE 4.6(B)

CHARACTERISTIC CAPACITY FOR A SINGLE SCREW IN SIDE GRAIN LOADED IN WITHDRAWAL—SEASONED TIMBER

Joint group	Characteristic capacity per screw, N per mm penetration of thread						
	Screw size number						
	4	6	8	10	12	14	18
	Shank diameter, mm						
	2.74	3.45	4.17	4.88	5.59	6.3	7.72
JD1	81	102	125	147	168	189	232
JD2	62	79	97	112	127	145	178
JD3	48	62	73	87	100	112	137
JD4	37	46	56	66	75	85	104
JD5	29	37	44	52	60	68	83
JD6	23	29	35	41	46	52	64

TABLE 4.7

MAXIMUM TENSILE CAPACITY FOR SCREWS

Metal	Maximum tensile capacity, N						
	Screw size number						
	4	6	8	10	12	14	18
Steel and 18/8 Stainless steel	1 410	2 140	3 180	4 380	5 710	7 300	10 810
Brass and silicon bronze	1 080	1 640	2 450	3 380	4 400	5 620	8 320
Aluminium alloy	830	1 250	1 870	2 590	3 360	4 300	6 370

4.3.3 Design capacity of screwed joints

4.3.3.1 *General*

The design capacity of Type 1 and Type 2 screwed joints shall be calculated in accordance with Clauses 4.3.3.2 to 4.3.3.4.

4.3.3.2 *Type 1 joint to resist direct loads*

The design capacity, (ϕN_j), for a Type 1 joint containing n screws designed to resist direct loads as illustrated in Figure 4.5(a), for strength limit states shall satisfy—

$$(\phi N_j) \geq N^* \qquad \ldots 4.3(1)$$

where

$$(\phi N_j) = \phi\, k_1\, k_{13}\, k_{14}\, k_{16}\, k_{17}\, n\, Q_k \qquad \ldots 4.3(2)$$

and

N^* = design action effect on joint produced by strength limit states design loads (direct loads)

ϕ = capacity factor (see Clause 2.3)

k_1 = the factor for duration of load for joints (see Clause 2.4.1.1)

Accessed by SWINBURNE UNIVERSITY OF TECHNOLOGY on 15 Aug 2007

@Seismicisolation

@Seismicisolation

k_{13} = 1.0 for screws in side grain. See Figure 4.3(a)
= 0.6 for screws in end grain. See Figure 4.3(b)

k_{14} = 1.0 for screws in single shear. See Figure 4.6(a)
= 2.0 for screws in double shear. See Figure 4.6(b)

k_{16} = 1.2 where the load is applied through metal side plates of adequate strength to transfer the load and the screws are a close fit to the holes in these plates
= 1.1 for screws through plywood gusset plates
= 1.0 otherwise

k_{17} = factor for multiple screwed joints given in Table 4.3(A) for Type 1 joints to resist direct loads either in compression or tension

N = total number of screws in the joint

Q_k = characteristic capacity given in Tables 4.5(A) and 4.5(B). See also Clause 4.3.2 and 4.3.5.

4.3.3.3 *Type 1 joint to resist in-plane bending moments*

The design capacity, (ϕM_j), for a Type 1 joint containing n screws designed to resist in-plane moment, as illustrated in Figure 4.4(b), for strength limit state shall satisfy—

$$(\phi M_j) \geq M^* \qquad \ldots 4.3(3)$$

Where

$$(\phi M_j) = \phi\, k_1\, k_{13}\, k_{14}\, k_{16}\, k_{17}\, r_{max.}\, Q_k \left[\sum_{i=1}^{n} \left(\frac{r_i}{r_{max.}} \right)^{\frac{3}{2}} \right] \qquad \ldots 4.3(4)$$

and

M^* = design action effect on joint (in-plane bending moment)

ϕ = capacity factor (see Clause 2.4.1.1)

k_1 = the factor for duration of load for joints (see Clause 2.4.1.1)

k_{13} = 1.0 for screws in side grain. See Figure 4.3(a)
= 0.6 for screws in end grain. See Figure 4.3(b)

k_{14} = 1.0 for nails in single shear. See Figure 4.6
= 2.0 for nails in double shear. See Figure 4.6

k_{16} = 1.2 where the load is applied through metal side plates of adequate strength to transfer the load and the screws are a close fit to the holes in these plates
= 1.1 for screws through plywood gusset plates
= 1.0 otherwise

k_{17} = factor for multiple screwed joints given in Table 4.3(B) for Type 1 joints to resist in-plane moments

$r_{max.}$ = the maximum value of r_i

Q_k = characteristic capacity given in Tables 4.5(A) and 4.5(B). See also Clause 4.3.2 and 4.3.5.

n = total number of screws in single shear per interface resisting the design in-plane moment

r_i = the distance from the ith screw to the centroid of the screw group

Accessed by SWINBURNE UNIVERSITY OF TECHNOLOGY on 15 Aug 2007

@Seismicisolation

@Seismicisolation

4.3.3.4 *Type 2 joint*

The design capacity (ϕN_j) for Type 2 joint containing n screws designed to resist axial loads tending to cause withdrawal, as illustrated in Figure 4.4, for strength limit states shall satisfy—

$$(\phi N_j) \geq N^* \qquad \ldots 4.3(5)$$

where (ϕN_j) is the lesser of—

$$(\phi N_j) = \phi\, k_{13}\, l_p\, n\, Q_k; \text{ or} \qquad \ldots 4.3(6)$$

$$(\phi N_j) = n\,(\phi N_{ts}) \qquad \ldots 4.3(7)$$

And

N^* = design action effect in the axial direction of the fastener

ϕ = capacity factor (see Clause 2.3)

k_{13} = 1.0 for withdrawal from side grain (see Figure 4.4(a))
= 0.6 for withdrawal from end grain (see Figure 4.4(b))

l_p = depth of screw penetration, in millimetres, into primary member (see Figure 4.4(a))

n = total number of screws in the joint

Q_k = characteristic capacity given in Tables 4.6(A) and 4.6(B). See also Clause 4.3.2

(ϕN_{ts}) = design tensile capacity of screw; refer screw manufacturer's specifications.

NOTES:

1 The duration of load factor k_1 does not apply to screws subject to the action of withdrawal loads.

2 For some kinds of screw, head pull-through may be a design consideration.

4.3.4 Spacing, edge and end distances

Table 4.8 provides minimum spacings, edge and end distances for screws given in terms of the shank diameter D.

TABLE 4.8

MINIMUM SPACING, EDGE AND END DISTANCES FOR SCREWS

Spacing	Minimum distance
End distance	10D
Edge distance	5D
Between screws	
—along grain	10D
—across grain	3D

D = shank diameter of screws.

For spacings at an angle to the grain, interpolation according to Hankinson's formula may be used. See Clause 4.4.2.4.

4.3.5 Screw length and timber thickness

For the characteristic capacities given in Tables 4.5(A) and 4.5(B) to be applicable, timber thicknesses and screw length as shown in Figure 4.6(a) shall be such that—

(a) thickness of first member ..... $t_1 > 10D$; and

(b) depth of penetration into second member ..... $t_p > 7D$.

@Seismicisolation

Accessed by SWINBURNE UNIVERSITY OF TECHNOLOGY on 15 Aug 2007

@Seismicisolation

For lesser values of t_1 and t_p, the characteristic capacity shall be reduced in proportion to the decrease in t_1 or t_p and the screw shall be considered as non-load-bearing if t_1 or t_p is less than 4*D*.

4.3.6 Preboring

The values given in Tables 4.5(A), 4.5(B), 4.6(A) and 4.6(B) apply when the correct size lead holes have been bored. The diameter of the hole for the shank shall be equal to the diameter of the shank, and the lead hole for the threaded portion of the screw shall not be greater than the root diameter of the screw.

NOTE: These limits do not apply to plywood. See Appendix C.

4.4 DESIGN OF BOLTED JOINTS

4.4.1 General

The characteristic capacities given in Clauses 4.4.2.2 and 4.4.2.3 are applicable to steel bolts as specified in AS 1111, when fitted into prebored holes of diameter approximately 10 percent greater than the bolt diameter and when fitted with washers as given in Clause 4.4.5.

NOTE: For dome head coach bolts, washers should be fitted. Where dome head coach bolts are used shank diameter should be equivalent to thread diameter.

Characteristic capacities for values of bolt diameters and effective timber thicknesses that are not included in Tables 4.9 and 4.10 shall be calculated in accordance with Paragraph C3, Appendix C.

4.4.2 Characteristic capacities for bolts

4.4.2.1 *General*

The characteristic capacities for bolts laterally loaded parallel and perpendicular to the grain and at other angles to the grain are given in Clauses 4.4.2.2 to 4.4.2.4.

4.4.2.2 *Characteristic capacity parallel to the grain*

The characteristic capacity, Q_{kl}, for a laterally loaded single bolt bearing parallel to the grain and acting in single shear is given for a selection of bolt diameters and effective timber thicknesses in Table 4.9(B) and 4.9(C).

4.4.2.3 *Characteristic capacity perpendicular to grain*

The characteristic capacity, Q_{kp}, for a laterally loaded single bolt bearing perpendicular to the grain and acting in single shear is given for a selection of bolt diameters and effective timber thicknesses in Tables 4.10(B) and 4.10(C).

4.4.2.4 *Characteristic capacity for a bolted joint system*

The characteristic capacity, Q_{sk}, for a laterally loaded single bolt in a bolted joint system, shall be derived as follows:

(a) For systems loaded parallel to the grain—

$Q_{sk} = Q_{skl}$

where Q_{skl} is the system capacity given in Table 4.9(A).

(b) For systems loaded perpendicular to the grain—

$Q_{sk} = Q_{skp}$

where Q_{skp} is the system capacity given in Table 4.10(A).

(c) For systems loaded at an angle to the grain, (θ), the system capacity shall be calculated by use of Hankinson's formula as follows:

Accessed by SWINBURNE UNIVERSITY OF TECHNOLOGY on 15 Aug 2007

@Seismicisolation

@Seismicisolation

$$Q_{sk} = \frac{Q_{skl}\, Q_{skp}}{Q_{skl} \sin^2 \theta + Q_{skp} \cos^2 \theta} \qquad \ldots 4.4(1)$$

This expression may be evaluated by means of the nomograms given in Figures 4.7(A) to (D).

4.4.2.5 *Maximum tensile load capacity*

The maximum tensile load capacity for a bolt subject to direct axial loading shall not exceed the value appropriate to the diameter and metal from which the bolt is manufactured as given in Table 4.12.

TABLE 4.9(A)

CHARACTERISTIC CAPACITY FOR SINGLE BOLTS PARALLEL TO GRAIN—SYSTEM CAPACITY

Type of joint	Effective timber thickness b_{eff}	System capacity Q_{skl}
Two member 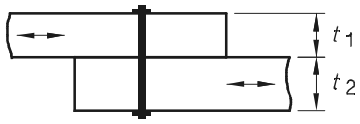	b_{eff} equals smaller of t_1 and t_2	Q_{kl}
Three member 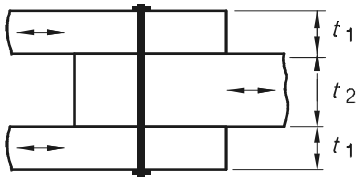	b_{eff} equals smaller of t_2 and $2t_1$	$2Q_{kl}$
Multiple member 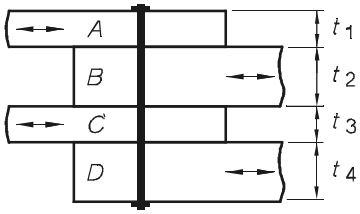	(i) Between A and B, b_{eff} equals the smaller of t_1 and t_2 (ii) Between B and C, b_{eff} equals the smaller of t_2 and t_3 (iii) etc.	(i) Q_{kl} (ii) Q_{kl} (iii) etc. Q_{skl} = sum of basic loads (i), (ii), etc.

NOTE: Values of the characteristic capacity Q_{kl} are given in Tables 4.9(B) and 4.9(C) for unseasoned and seasoned timber respectively.

Accessed by SWINBURNE UNIVERSITY OF TECHNOLOGY on 15 Aug 2007

@Seismicisolation

@Seismicisolation

TABLE 4.9(B)

CHARACTERISTIC CAPACITY FOR SINGLE BOLTS PARALLEL TO GRAIN—UNSEASONED TIMBER

Joint group	Effect timber thickness b_{eff}, mm	Characteristic capacity Q_{kl}, N								
		Bolt diameter								
		M6	M8	M10	M12	M16	M20	M24	M30	M36
J1	25	3 300	5 600	6 900	8 300	11 100	13 900	16 700	20 800	25 000
	38	3 300	5 900	9 200	12 700	16 900	21 100	25 300	31 600	38 000
	50	3 300	5 900	9 200	13 200	22 200	27 800	33 300	41 600	50 000
	75	3 300	5 900	9 200	13 200	23 400	36 600	50 000	62 400	74 900
	100	3 300	5 900	9 200	13 200	23 400	36 600	52 700	82 400	99 900
	150	3 300	5 900	9 200	13 200	23 400	36 600	52 700	82 400	118 700
	200	3 300	5 900	9 200	13 200	23 400	36 600	52 700	82 400	118 700
J2	25	2 800	4 400	5 500	6 600	8 800	11 000	13 200	16 500	19 800
	38	2 800	4 900	7 700	10 000	13 400	16 700	20 100	25 100	30 100
	50	2 800	4 900	7 700	11 100	17 600	22 000	26 400	33 000	39 600
	75	2 800	4 900	7 700	11 100	19 700	30 800	39 600	49 500	59 400
	100	2 800	4 900	7 700	11 100	19 700	30 800	44 400	66 000	79 200
	150	2 800	4 900	7 700	11 100	19 700	30 800	44 400	69 300	99 800
	200	2 800	4 900	7 700	11 100	19 700	30 800	44 400	69 300	99 800
J3	25	2 600	3 600	4 400	5 300	7 100	8 900	10 700	13 300	16 000
	38	2 600	4 500	6 700	8 100	10 800	13 500	16 200	20 200	24 300
	50	2 600	4 500	7 100	10 200	14 200	17 800	21 300	26 600	32 000
	75	2 600	4 500	7 100	10 200	18 200	26 600	32 000	39 900	47 900
	100	2 600	4 500	7 100	10 200	18 200	28 400	40 900	53 300	63 900
	150	2 600	4 500	7 100	10 200	18 200	28 400	40 900	63 900	92 000
	200	2 600	4 500	7 100	10 200	18 200	28 400	40 900	63 900	92 000
J4	25	2 000	2 800	3 500	4 200	5 600	7 000	8 400	10 500	12 600
	38	2 000	3 600	5 300	6 400	8 500	10 600	12 800	16 000	19 200
	50	2 000	3 600	5 600	8 100	11 200	14 000	16 800	21 000	25 200
	75	2 000	3 600	5 600	8 100	14 300	21 000	25 200	31 500	37 800
	100	2 000	3 600	5 600	8 100	14 300	22 400	32 300	42 000	50 400
	150	2 000	3 600	5 600	8 100	14 300	22 400	32 300	50 400	72 600
	200	2 000	3 600	5 600	8 100	14 300	22 400	32 300	50 400	72 600
J5	25	1 700	2 200	2 800	3 300	4 400	5 500	6 600	8 300	9 900
	38	1 700	3 100	4 200	5 000	6 700	8 400	10 000	12 500	15 000
	50	1 700	3 100	4 800	6 600	8 800	11 000	13 200	16 500	19 800
	75	1 700	3 100	4 800	7 000	12 400	16 500	19 800	24 800	29 700
	100	1 700	3 100	4 800	7 000	12 400	19 400	26 400	33 000	39 600
	150	1 700	3 100	4 800	7 000	12 400	19 400	27 900	43 600	59 400
	200	1 700	3 100	4 800	7 000	12 400	19 400	27 900	43 600	62 700
J6	25	1 400	1 800	2 300	2 700	3 600	4 500	5 400	6 800	8 100
	38	1 600	2 700	3 400	4 100	5 500	6 800	8 200	10 300	12 300
	50	1 600	2 800	4 300	5 400	7 200	9 000	10 800	13 500	16 200
	75	1 600	2 800	4 300	6 200	10 800	13 500	16 200	20 300	24 300
	100	1 600	2 800	4 300	6 200	11 100	17 300	21 600	27 000	32 400
	150	1 600	2 800	4 300	6 200	11 100	17 300	24 900	38 900	48 600
	200	1 600	2 800	4 300	6 200	11 100	17 300	24 900	38 900	56 000

Accessed by SWINBURNE UNIVERSITY OF TECHNOLOGY on 15 Aug 2007

@Seismicisolation

@Seismicisolation

TABLE 4.9(C)

CHARACTERISTIC CAPACITY FOR SINGLE BOLTS PARALLEL TO GRAIN—SEASONED TIMBER

Joint group	Effect timber thickness b_{eff}, mm	Characteristic capacity Q_{kl}, N								
		Bolt diameter								
		M6	M8	M10	M12	M16	M20	M24	M30	M36
JD1	25	4 100	6 900	8 600	10 400	13 800	17 300	20 700	25 900	31 100
	35	4 100	7 300	11 400	14 500	19 300	24 200	29 000	36 200	43 500
	40	4 100	7 300	11 400	16 400	22 100	27 600	33 100	41 400	49 700
	45	4 100	7 300	11 400	16 400	24 800	31 100	37 300	46 600	55 900
	70	4 100	7 300	11 400	16 400	29 100	45 500	58 000	72 500	86 900
	90	4 100	7 300	11 400	16 400	29 100	45 500	65 600	93 200	111 800
	105	4 100	7 300	11 400	16 400	29 100	45 500	65 600	102 500	130 400
	120	4 100	7 300	11 400	16 400	29 100	45 500	65 600	102 500	147 500
JD2	25	3 500	5 600	6 900	8 300	11 100	13 900	16 700	20 800	25 000
	35	3 500	6 200	9 700	11 700	15 500	19 400	23 300	29 100	35 000
	40	3 500	6 200	9 700	13 300	17 800	22 200	26 600	33 300	40 000
	45	3 500	6 200	9 700	14 000	20 000	25 000	30 000	37 500	45 000
	70	3 500	6 200	9 700	14 000	24 900	38 900	46 600	58 300	69 900
	90	3 500	6 200	9 700	14 000	24 900	38 900	55 900	74 900	89 900
	105	3 500	6 200	9 700	14 000	24 900	38 900	55 900	87 400	104 900
	120	3 500	6 200	9 700	14 000	24 900	38 900	55 900	87 400	119 900
JD3	25	3 200	4 400	5 500	6 600	8 800	11 000	13 200	16 500	19 800
	35	3 200	5 600	7 700	9 200	12 300	15 400	18 500	23 100	27 700
	40	3 200	5 600	8 800	10 600	14 100	17 600	21 100	26 400	31 700
	45	3 200	5 600	8 800	11 900	15 800	19 800	23 800	29 700	35 600
	70	3 200	5 600	8 800	12 700	22 500	30 800	37 000	46 200	55 400
	90	3 200	5 600	8 800	12 700	22 500	35 200	47 500	59 400	71 300
	105	3 200	5 600	8 800	12 700	22 500	35 200	50 700	69 300	83 200
	120	3 200	5 600	8 800	12 700	22 500	35 200	50 700	79 200	95 000
JD4	25	2 600	3 600	4 400	5 300	7 100	8 900	10 700	13 300	16 000
	35	2 600	4 500	6 200	7 500	9 900	12 400	14 900	18 600	22 400
	40	2 600	4 500	7 100	8 500	11 400	14 200	17 000	21 300	25 600
	45	2 600	4 500	7 100	9 600	12 800	16 000	19 200	24 000	28 800
	70	2 600	4 500	7 100	10 200	18 200	24 900	29 800	37 300	44 700
	90	2 600	4 500	7 100	10 200	18 200	28 400	38 300	47 900	57 500
	105	2 600	4 500	7 100	10 200	18 200	28 400	40 900	55 900	67 100
	120	2 600	4 500	7 100	10 200	18 200	28 400	40 900	63 900	76 700
JD5	25	2 100	2 800	3 500	4 200	5 600	7 000	8 400	10 500	12 600
	35	2 200	3 900	4 900	5 900	7 800	9 800	11 800	14 700	17 600
	40	2 200	3 900	5 600	6 700	9 000	11 200	13 400	16 800	20 200
	45	2 200	3 900	6 200	7 600	10 100	12 600	15 100	18 900	22 700
	70	2 200	3 900	6 200	8 900	15 700	19 600	23 500	29 400	35 300
	90	2 200	3 900	6 200	8 900	15 800	24 600	30 200	37 800	45 400
	105	2 200	3 900	6 200	8 900	15 800	24 600	35 300	44 100	52 900
	120	2 200	3 900	6 200	8 900	15 800	24 600	35 500	50 400	60 500
JD6	25	1 700	2 200	2 800	3 300	4 400	5 500	6 600	8 300	9 900
	35	1 900	3 100	3 900	4 600	6 200	7 700	9 200	11 600	13 900
	40	1 900	3 400	4 400	5 300	7 000	8 800	10 600	13 200	15 800
	45	1 900	3 400	5 000	5 900	7 900	9 900	11 900	14 900	17 800
	70	1 900	3 400	5 300	7 600	12 300	15 400	18 500	23 100	27 700
	90	1 900	3 400	5 300	7 600	13 500	19 800	23 800	29 700	35 600
	105	1 900	3 400	5 300	7 600	13 500	21 100	27 700	34 700	41 600
	120	1 900	3 400	5 300	7 600	13 500	21 100	30 400	39 600	47 500

Accessed by SWINBURNE UNIVERSITY OF TECHNOLOGY on 15 Aug 2007

@Seismicisolation

@Seismicisolation

TABLE 4.10(A)

CHARACTERISTIC CAPACITY FOR SINGLE BOLTS PERPENDICULAR TO THE GRAIN—SYSTEM CAPACITY

Type of joint	Effective timber thickness b_{eff}	System capacity Q_{skp}
Two member 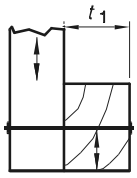	b_{eff} equals $2t_1$	Q_{kp}
Three member, Type A 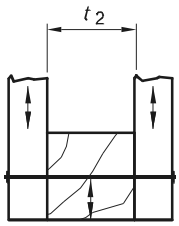	b_{eff} equals t_2	$2Q_{kp}$
Three member, Type B 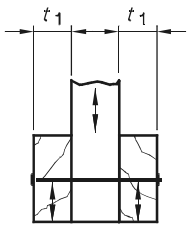	b_{eff} equals $2t_1$	$2Q_{kp}$
Multiple member 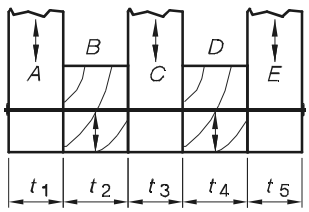	(i) Between A and B b_{eff} is equal to t_2 (ii) Between B and C b_{eff} is equal to t_2 (iii) Between C and D b_{eff} is equal to t_4	(i) Q_{kp} (ii) Q_{kp} (iii) etc. Q_{skp} = sum of basic loads (i), (ii), (iii), etc.

NOTE: At each interface, the strength of the bolted joint with respect to the member aligned parallel to the direction of the stress shall be checked according to Table 4.9.

Accessed by SWINBURNE UNIVERSITY OF TECHNOLOGY on 15 Aug 2007

@Seismicisolation

@Seismicisolation

TABLE 4.10(B)

CHARACTERISTIC CAPACITY FOR SINGLE BOLTS PERPENDICULAR TO THE GRAIN—UNSEASONED TIMBER

Joint group	Effect timber thickness b_{eff}, mm	Characteristic capacity Q_{kp}, N								
		Bolt diameter								
		M6	M8	M10	M12	M16	M20	M24	M30	M36
J1	25	1 650	2 200	2 750	3 300	4 400	5 500	6 600	8 250	9 900
	38	2 510	3 340	4 180	5 020	6 690	8 360	10 030	12 540	15 050
	50	3 230	4 400	5 500	6 600	8 800	11 000	13 200	16 500	19 800
	75	3 230	4 980	6 960	9 150	13 200	16 500	19 800	24 750	29 700
	100	3 230	4 980	6 960	9 150	14 080	19 680	25 870	33 000	39 600
	150	3 230	4 980	6 960	9 150	14 080	19 680	25 870	36 150	47 520
	200	3 230	4 980	6 960	9 150	14 080	19 680	25 870	36 150	47 520
J2	25	1 310	1 750	2 190	2 630	3 500	4 380	5 250	6 560	7 880
	38	2 000	2 660	3 330	3 990	5 320	6 650	7 980	9 980	11 970
	50	2 630	3 500	4 380	5 250	7 000	8 750	10 500	13 130	15 750
	75	3 090	4 750	6 560	7 880	10 500	13 130	15 750	19 690	23 630
	100	3 090	4 750	6 640	8 730	13 440	17 500	21 000	26 250	31 500
	150	3 090	4 750	6 640	8 730	13 440	18 780	24 690	34 510	45 360
	200	3 090	4 750	6 640	8 730	13 440	18 780	24 690	34 510	45 360
J3	25	830	1 100	1 380	1 650	2 200	2 750	3 300	4 130	4 950
	38	1 250	1 670	2 090	2 510	3 340	4 180	5 020	6 270	7 520
	50	1 650	2 200	2 750	3 300	4 400	5 500	6 600	8 250	9 900
	75	2 420	3 300	4 130	4 950	6 600	8 250	9 900	12 380	14 850
	100	2 420	3 730	5 220	6 600	8 800	11 000	13 200	16 500	19 800
	150	2 420	3 730	5 220	6 860	10 560	14 760	19 400	24 750	29 700
	200	2 420	3 730	5 220	6 860	10 560	14 760	19 400	27 110	35 640
J4	25	530	710	890	1 070	1 420	1 780	2 130	2 660	3 200
	38	810	1 080	1 350	1 620	2 160	2 700	3 240	4 050	4 860
	50	1 070	1 420	1 780	2 130	2 840	3 550	4 260	5 330	6 390
	75	1 600	2 130	2 660	3 200	4 260	5 330	6 390	7 990	9 590
	100	1 770	2 730	3 550	4 260	5 680	7 100	8 520	10 650	12 780
	150	1 770	2 730	3 820	5 020	7 720	10 650	12 780	15 980	19 170
	200	1 770	2 730	3 820	5 020	7 720	10 800	14 190	19 830	25 560
J5	25	350	470	590	710	940	1 180	1 410	1 760	2 120
	38	540	710	890	1 070	1 430	1 790	2 140	2 680	3 210
	50	710	940	1 180	1 410	1 880	2 350	2 820	3 530	4 230
	75	1 060	1 410	1 760	2 120	2 820	3 530	4 230	5 290	6 350
	100	1 310	1 880	2 350	2 820	3 760	4 700	5 640	7 050	8 460
	150	1 310	2 020	2 820	3 710	5 640	7 050	8 460	10 580	12 690
	200	1 310	2 020	2 820	3 710	5 720	7 990	10 500	14 100	16 920
J6	25	180	240	300	360	480	600	720	900	1 080
	38	270	360	460	550	730	910	1 090	1 370	1 640
	50	360	480	600	720	960	1 200	1 440	1 800	2 160
	75	540	720	900	1 080	1 440	1 800	2 160	2 700	3 240
	100	720	960	1 200	1 440	1 920	2 400	2 880	3 600	4 320
	150	780	1 190	1 670	2 160	2 880	3 600	4 320	5 400	6 480
	200	780	1 190	1 670	2 190	3 380	4 720	5 760	7 200	8 640

Accessed by SWINBURNE UNIVERSITY OF TECHNOLOGY on 15 Aug 2007

@Seismicisolation

@Seismicisolation

TABLE 4.10(C)

CHARACTERISTIC CAPACITY FOR SINGLE BOLTS PERPENDICULAR TO THE GRAIN—SEASONED TIMBER

Joint group	Effect timber thickness b_{eff}, mm	Characteristic capacity Q_{kp}, N								
		Bolt diameter								
		M6	M8	M10	M12	M16	M20	M24	M30	M36
JD1	25	2 210	2 950	3 690	4 430	5 900	7 380	8 850	11 060	13 280
	35	3 100	4 130	5 160	6 200	8 260	10 330	12 390	15 490	18 590
	40	3 540	4 720	5 900	7 080	9 440	11 800	14 160	17 700	21 240
	45	3 980	5 310	6 640	7 970	10 620	13 280	15 930	19 910	23 900
	70	4 340	6 680	9 330	12 260	16 520	20 650	24 780	30 980	37 170
	90	4 340	6 680	9 330	12 260	18 880	26 390	31 860	39 830	47 790
	105	4 340	6 680	9 330	12 260	18 880	26 390	34 680	46 460	55 760
	120	4 340	6 680	9 330	12 260	18 880	26 390	34 680	48 470	63 720
JD2	25	1 690	2 250	2 810	3 380	4 500	5 630	6 750	8 440	10 130
	35	2 360	3 150	3 940	4 730	6 300	7 880	9 450	11 810	14 180
	40	2 700	3 600	4 500	5 400	7 200	9 000	10 800	13 500	16 200
	45	3 040	4 050	5 060	6 080	8 100	10 130	12 150	15 190	18 230
	70	3 970	6 110	7 880	9 450	12 600	15 750	18 900	23 630	28 350
	90	3 970	6 110	8 540	11 220	16 200	20 250	24 300	30 380	36 450
	105	3 970	6 110	8 540	11 220	17 280	23 630	28 350	35 440	42 530
	120	3 970	6 110	8 540	11 220	17 280	24 150	31 750	40 500	48 600
JD3	25	1 280	1 700	2 130	2 550	3 400	4 250	5 100	6 380	7 650
	35	1 790	2 380	2 980	3 570	4 760	5 950	7 140	8 930	10 710
	40	2 040	2 720	3 400	4 080	5 440	6 800	8 160	10 200	12 240
	45	2 300	3 060	3 830	4 590	6 120	7 650	9 180	11 480	13 770
	70	3 570	4 760	5 950	7 140	9 520	11 900	14 280	17 850	21 420
	90	3 750	5 770	7 650	9 180	12 240	15 300	18 360	22 950	27 540
	105	3 750	5 770	8 060	10 600	14 280	17 850	21 420	26 780	32 130
	120	3 750	5 770	8 060	10 600	16 320	20 400	24 480	30 600	36 720
JD4	25	940	1 250	1 560	1 880	2 500	3 130	3 750	4 690	5 630
	35	1 310	1 750	2 190	2 630	3 500	4 380	5 250	6 560	7 880
	40	1 500	2 000	2 500	3 000	4 000	5 000	6 000	7 500	9 000
	45	1 690	2 250	2 810	3 380	4 500	5 630	6 750	8 440	10 130
	70	2 630	3 500	4 380	5 250	7 000	8 750	10 500	13 130	15 750
	90	3 120	4 500	5 630	6 750	9 000	11 250	13 500	16 880	20 250
	105	3 120	4 810	6 560	7 880	10 500	13 130	15 750	19 690	23 630
	120	3 120	4 810	6 720	8 830	12 000	15 000	18 000	22 500	27 000
JD5	25	680	900	1 130	1 350	1 800	2 250	2 700	3 380	4 050
	35	950	1 260	1 580	1 890	2 520	3 150	3 780	4 730	5 670
	40	1 080	1 440	1 800	2 160	2 880	3 600	4 320	5 400	6 480
	45	1 220	1 620	2 030	2 430	3 240	4 050	4 860	6 080	7 290
	70	1 890	2 520	3 150	3 780	5 040	6 300	7 560	9 450	11 340
	90	2 430	3 240	4 050	4 860	6 480	8 100	9 720	12 150	14 580
	105	2 510	3 780	4 730	5 670	7 560	9 450	11 340	14 180	17 010
	120	2 510	3 870	5 400	6 480	8 640	10 800	12 960	16 200	19 440
JD6	25	460	610	760	920	1 220	1 530	1 830	2 290	2 750
	35	640	850	1 070	1 280	1 710	2 140	2 560	3 200	3 840
	40	730	980	1 220	1 460	1 950	2 440	2 930	3 660	4 390
	45	820	1 100	1 370	1 650	2 200	2 750	3 290	4 120	4 940
	70	1 280	1 710	2 140	2 560	3 420	4 270	5 120	6 410	7 690
	90	1 650	2 200	2 750	3 290	4 390	5 490	6 590	8 240	9 880
	105	1 920	2 560	3 200	3 840	5 120	6 410	7 690	9 610	11 530
	120	1 970	2 930	3 660	4 390	5 860	7 320	8 780	10 980	13 180

Accessed by SWINBURNE UNIVERSITY OF TECHNOLOGY on 15 Aug 2007

@Seismicisolation

@Seismicisolation

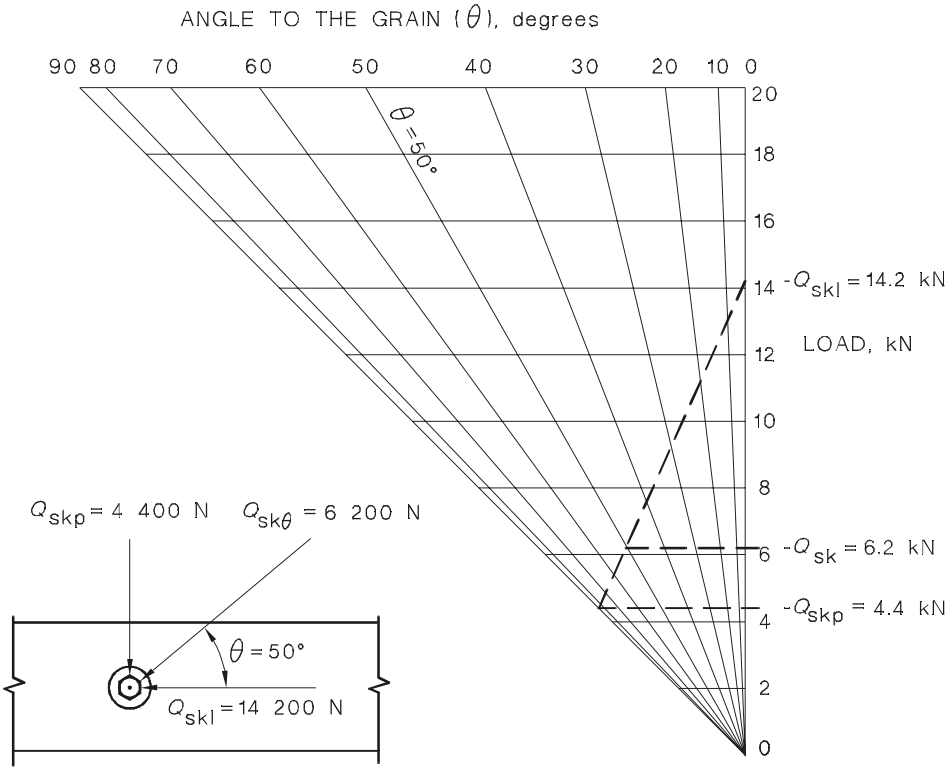

FIGURE 4.7(A) NOMOGRAM FOR HANKINSON'S FORMULA, RANGE I

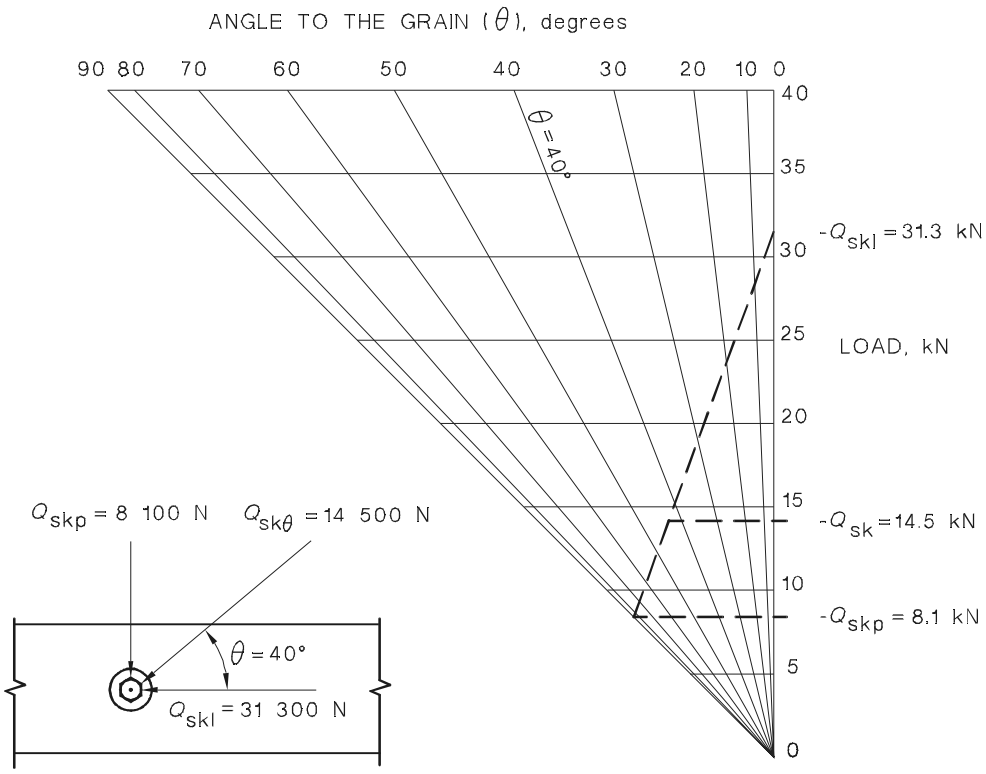

FIGURE 4.7(B) NOMOGRAM FOR HANKINSON'S FORMULA, RANGE II

Accessed by SWINBURNE UNIVERSITY OF TECHNOLOGY on 15 Aug 2007

@Seismicisolation

@Seismicisolation

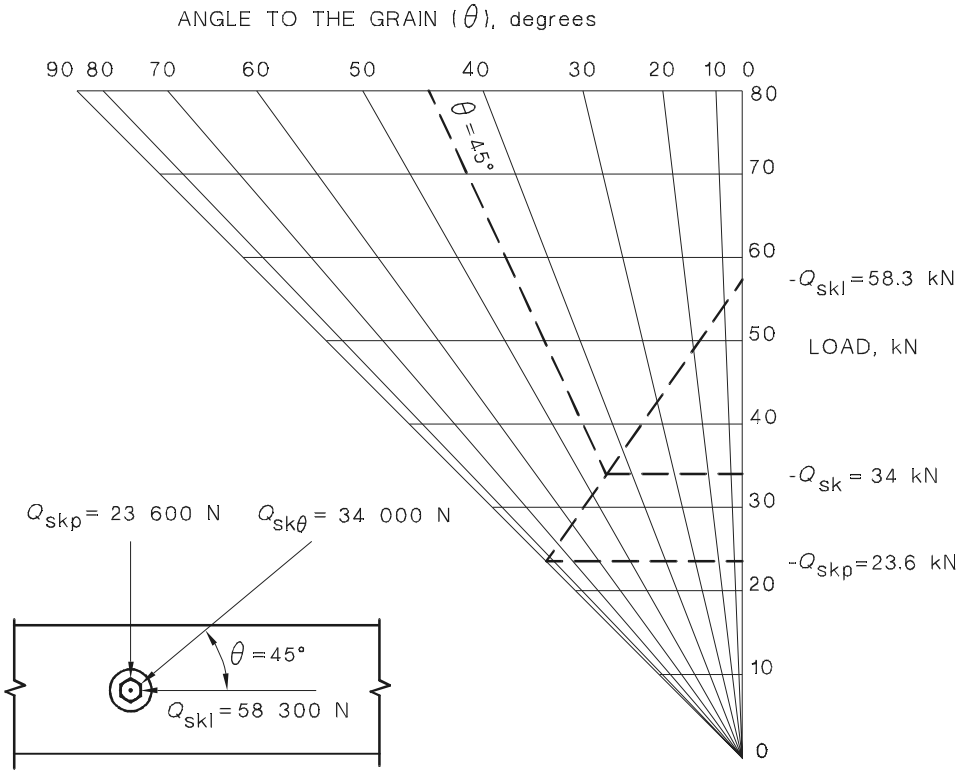

FIGURE 4.7(C) NOMOGRAM FOR HANKINSON'S FORMULA, RANGE III

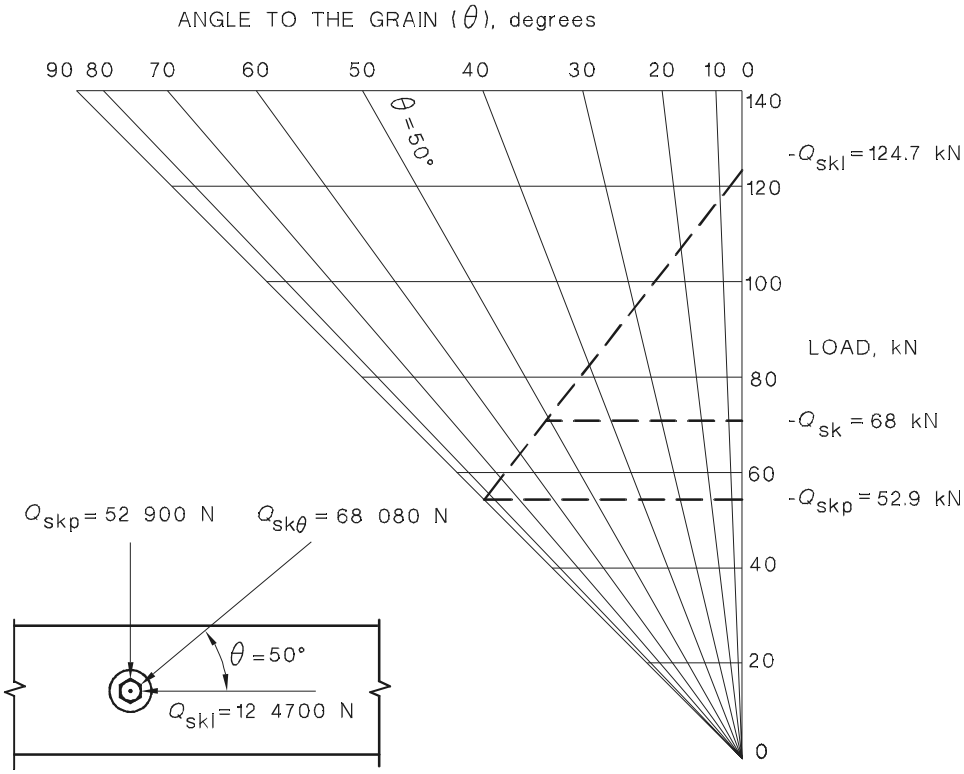

FIGURE 4.7(D) NOMOGRAM FOR HANKINSON'S FORMULA, RANGE IV

Accessed by SWINBURNE UNIVERSITY OF TECHNOLOGY on 15 Aug 2007

@Seismicisolation

@Seismicisolation

4.4.3 Design capacity for bolted connections

4.4.3.1 *General*

The design capacity for Type 1 and Type 2 bolted connections shall be calculated in accordance with Clauses 4.4.3.2 to 4.4.3.4.

4.4.3.2 *Type 1 joint*

The design capacity, (ϕN_j), for a Type 1 joint containing n bolts in shear to resist lateral loads, as illustrated in Table 4.9 and Table 4.10, shall satisfy—

$$(\phi N_j) \geq N^* \qquad \ldots 4.4(2)$$

Where

$$(\phi N_j) = \phi\, k_1\, k_{16}\, k_{17}\, n\, Q_{sk} \qquad \ldots 4.4(3)$$

and

N^* = design action effect in shear

ϕ = capacity factor (see Clause 2.3)

k_1 = factor for duration of load for fasteners (see Clause 2.4.1.1)

k_{16} = 1.2 for bolts that transfer load through metal sideplates (see Figure 4.8) of adequate strength, and the bolts are a close fit to the holes in these plates provided that $b_{eff}/D > 5$ for loads acting parallel to the grain and $b_{eff}/D > 10$ for loads acting perpendicular to the grain (where b_{eff} denotes the effective timber thickness and D is the bolt diameter)
= 1.0 otherwise

k_{17} = factor for multiple bolted joint given in Table 4.11

n = number of bolts resisting design action effect in shear

Q_{sk} = characteristic capacities as derived in Clause 4.4.2.4. See also Clauses 4.4.4 and 4.4.5.

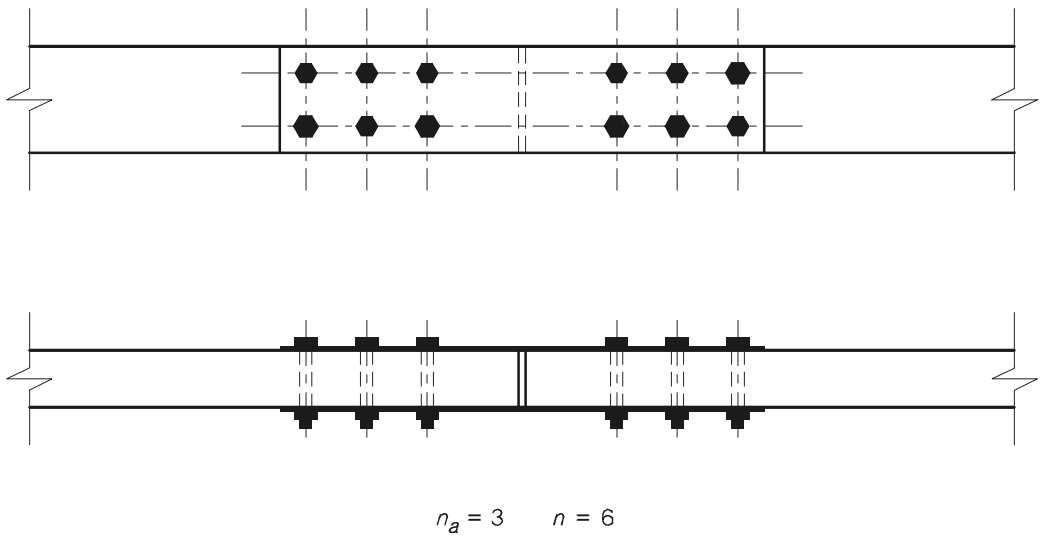

FIGURE 4.8 METAL PLATE BOLTED JOINTS

Accessed by SWINBURNE UNIVERSITY OF TECHNOLOGY on 15 Aug 2007

@Seismicisolation

@Seismicisolation

TABLE 4.11

VALUE OF k_{17} FOR USE IN THE DESIGN OF MULTIPLE FASTENER JOINTS FOR BOLTS, COACH SCREWS, SPLIT RINGS AND SHEAR PLATES

Type of joint	Values of k_{17}				
	$n_a \leq 4$†	$n_a = 5$	$n_a = 10$	$n_a = 15$	$n_a \geq 16$
Seasoned timber	1.0	1.0	1.0	1.0	1.0
Unseasoned timber (no transverse restraint*)	1.0	0.95	0.80	0.55	0.50
Unseasoned timber (transverse restraint*)	0.5	0.5	0.5	0.5	0.5

n_a = Total number of rows of fasteners per interface.

* The term 'transverse restraint' refers to the possibility of restraint to timber shrinkage due to the joint detail.

† Where a connection consists of a single fastener, k_{17} is taken as 1.0 for all timbers.

4.4.3.3 *Type 2 joints*

The design capacity (ϕN_j) for a Type 2 joint in which bolts are loaded in direct tension shall satisfy:

$$(\phi N_j) \geq N^* \qquad \ldots 4.4(4)$$

where (ϕN_j) is the lesser of—

$$(\phi N_j) = n\ (\phi N_{tb}) \qquad \ldots 4.4(5)$$

where crushing under the washer poses a limit to the strength—

A2 $$(\phi N_j) = \phi\ k_1\ k_7\ n\ f'_{pj}\ A_w \qquad \ldots 4.4(6)$$

and

N^* = design action effect in shear

n = number of bolts in the joint

(ϕN_{tb}) = design tensile capacity of bolts (see Table 4.12). See also Clause 4.4.5

ϕ = capacity factor for bolted joints (see Clause 2.3)

k_1 = duration of load factor for fasteners (see Clause 2.4.1.1)

k_7 = length of bearing factor (see Table 2.10) where the length of bearing is taken as the diameter or side length of the washer (see Table 4.12)

f'_{pj} = characteristic bearing capacity for timber in joints (see Table C6)

A_w = effective area of washer for bearing (see Table 4.12).

Accessed by SWINBURNE UNIVERSITY OF TECHNOLOGY on 15 Aug 2007

@Seismicisolation

@Seismicisolation

TABLE 4.12

MINIMUM REQUIRED SIZE OF WASHERS FOR STRUCTURAL BOLTED JOINTS

Bolt*	Washer size, mm			Effective area† for bearing mm^2	Axial design capacity of bolt‡ (ϕN_{tb}) N
	Thickness	Minimum diameter for round washers	Minimum side length for square washers		
M6	1.6	30	25	200	6 400
M8	2.0	36	32	350	11 700
M10	2.5	45	40	570	18 600
M12	3.0	55	50	750	27 000
M16	4.0	65	57	1 330	50 200
M20	5.0	75	65	1 960	78 400
M24	—	—	—	2 830	113 000
M30	—	—	—	3 740	180 000
M36	—	—	—	4 780	312 000

* Bolts to be of grade 4.6, as given in AS 1111.

† The effective area (A_w) is less than the actual area because it includes an allowance for bending of the washer.

‡ Bolt capacity, in accordance with AS 4100.

4.4.3.4 *Bolted joints with loads at an angle to the bolt axis*

The design capacity (ϕN_j) for a joint in which bolts are loaded at an angle to the axis of the bolts (see Figure 4.9) shall satisfy—

(a) Clause 4.4.3.2 for that component of the load normal to the bolt axis; and

(b) Clause 4.4.3.3 for that component parallel to the bolt axis.

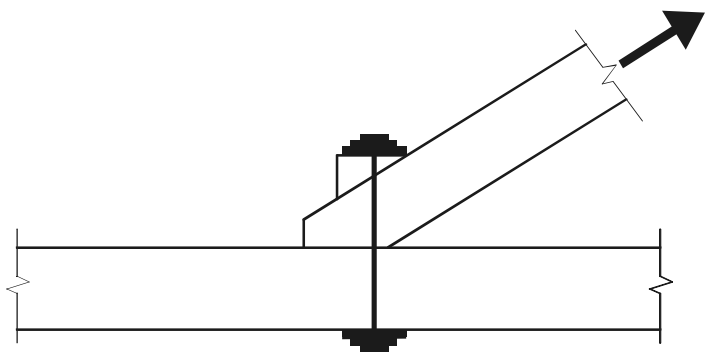

FIGURE 4.9 LOAD AT ANGLE TO BOLT AXIS

4.4.4 Bolt spacings, edge and end distances

4.4.4.1 *General*

Bolt spacings, edge and end distances shall comply with the requirements given in Clauses 4.4.4.2 to 4.4.4.4.

NOTE: Bolt spacings are measured from centres of bolts.

Accessed by SWINBURNE UNIVERSITY OF TECHNOLOGY on 15 Aug 2007

@Seismicisolation

@Seismicisolation

4.4.4.2 *Loads parallel to grain*

The characteristic capacities given in Tables 4.10(A), 4.10(B) and 4.10(C) apply to joints in which the edge, end and between-fastener spacings are not less than those shown in Figure 4.10(a).

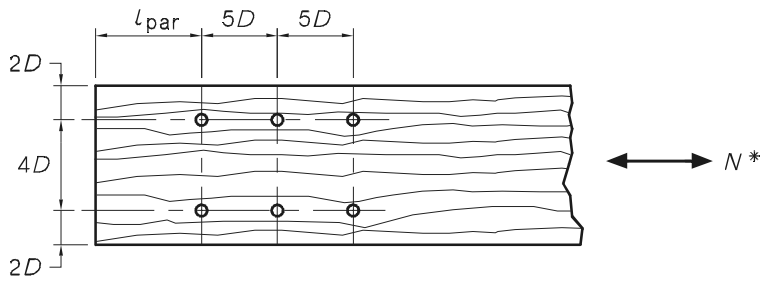

(a) Load applied parallel to grain

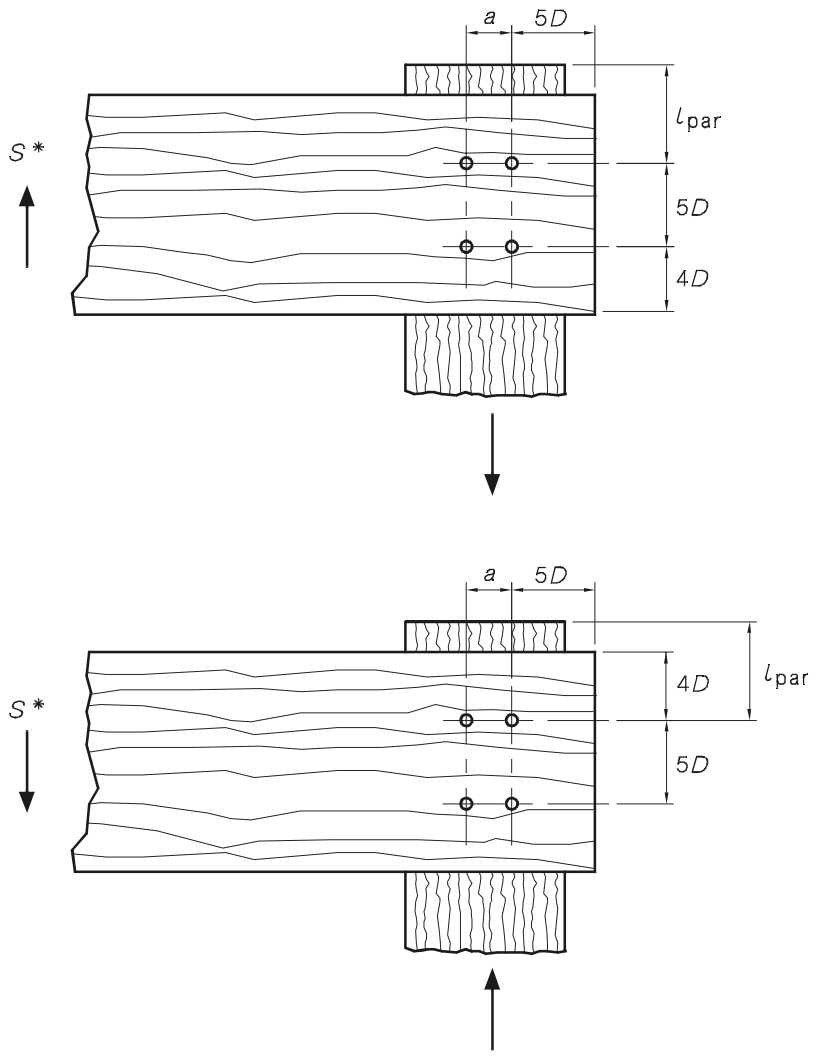

(b) Load applied perpendicular to grain

FIGURE 4.10 SPACINGS, EDGE AND END DISTANCES FOR BOLTED JOINTS

@Seismicisolation

Accessed by SWINBURNE UNIVERSITY OF TECHNOLOGY on 15 Aug 2007

@Seismicisolation

Similarly, the required end distance l_{par} shall be at least 8*D* in tension joints in unseasoned timber, 7*D* in tension joints in seasoned timber, and 5*D* in compression joints and in joints subject to bending moment for both moisture conditions. However, lesser end distances may be used in tension joints provided that the characteristic capacity is reduced in proportion to the reduction in end distance. In no case shall the end distance for tension joints be less than 6*D* for unseasoned timber and 5*D* for seasoned timber.

4.4.4.3 *Loads perpendicular to grain*

The minimum edge, end and between-fastener spacings shall be not less than those shown in Figure 4.10(b). The distance *a* shall be at least 2.5*D* for a *b/D* ratio of 2, and it shall be increased proportionately so that it is at least 5*D* for a *b/D* ratio of 6 or more, where *b* is the effective thickness of the member loaded perpendicular to the grain.

4.4.4.4 *Loads acting at an angle to the grain*

For loads acting at an angle 0° to 30° to the grain, the spacings, edge and end distances may be taken as for loads parallel to the grain. For loads acting at an angle of 30° to 90° to the grain, the spacings, edge and end distances may be taken as for loads acting perpendicular to the grain.

4.4.5 Washers

In all timber-to-timber bolted structural joints, every bolt shall be fitted with a washer at each end, of a size not less than that given in Table 4.12. If smaller washers are used, then the characteristic capacities for laterally loaded bolts given in Tables 4.9 to 4.10 shall be reduced in proportion to the dimension of the washer diameter or side length.

4.4.6 Eccentric joints

When it is impracticable to ensure that all the members meeting at a joint (see Figure 4.10) are arranged symmetrically, that is, the members' centroidal axes intersecting on a common axis which is also the axis of resistance of the bolt or group of bolts, then the combination of primary stresses (induced by axial loads) and secondary stresses (induced by bending moment resulting from bolt eccentricities) shall be checked to ensure that no member or fastener is excessively stressed. In addition, the design capacity in transverse shear at an eccentric joint (ϕV_{sj}) shall satisfy—

$$(\phi V_{sj}) \geq V_{sj}^{*} \qquad \ldots 4.4(7)$$

where

A2 $$(\phi V_{sj}) = \phi\, k_1\, k_4\, k_6\, f'_{sj}\, A_{sj} \qquad \ldots 4.4(8)$$

and

V_{sj}^{*} = design action effect on joint produced by strength limit states design loads (transverse shear at joint detail)

ϕ = capacity factor (See Clause 2.3)

k_1, k_4, k_6 = the modification factors given in Section 2 with k_1 appropriate for the member

f'_{sj} = characteristic strength in shear at joint details appropriate to species strength group. See Table 2.3(A)

A_{sj} = transverse shear plane area at joint section
= $2\, bd_s/3$. See Figure 4.11 where *b* is the thickness of the member.

Accessed by SWINBURNE UNIVERSITY OF TECHNOLOGY on 15 Aug 2007

@Seismicisolation

@Seismicisolation

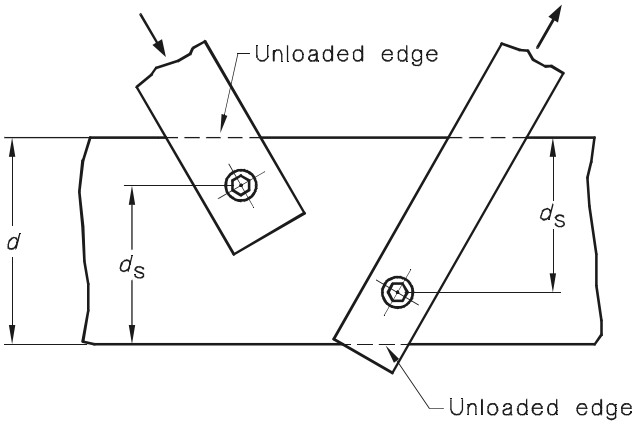

FIGURE 4.11 ECCENTRIC JOINTS

4.5 DESIGN OF COACH SCREWED JOINTS

4.5.1 General

The characteristic capacities given in Clause 4.5.2 are applicable to steel coach screws as specified in AS 1393, subject to lateral and withdrawal loads.

4.5.2 Characteristic capacities for coach screws

4.5.2.1 *Type 1 joints*

Characteristic capacities for Type 1 joints for coach screws are as follows:

(a) *Lateral loads in side grain (see Figure 4.3(a))* The characteristic capacities for coach screws laterally loaded in shear shall be taken as for bolts as given in Clause 4.4.2, subject to the following conditions:

(i) For the purpose of Clause 4.4.2, a coach screw shall be considered to be a bolt of diameter equal to the shank diameter of the screw.

(ii) The coach screws shall be fitted with washers as specified in Clause 4.4.5.

(iii) In a two-member joint, the thinner member shall have a minimum thickness of three times the shank diameter of the coach screw.

(iv) The diameter of the hole for the shank shall be not less than the shank diameter of the screw nor exceed it by more than 1 mm or 10 percent of the shank diameter, whichever is the lesser. The diameter of the hole for the threaded portion of the screw shall not exceed the root diameter of the screw.

The depth of the hole shall exceed the intended depth to which the screw is to be driven.

The screw shall be turned into place and not hammered.

Accessed by SWINBURNE UNIVERSITY OF TECHNOLOGY on 15 Aug 2007

@Seismicisolation

@Seismicisolation

(v) Timber thicknesses and coach screw lengths as shown in Figure 4.6(a) shall be such that—

(A) the thickness of outermost member, $t_1 > 3D$; and

(B) the depth of penetration into the second member (t_p), for species groups is—

(1) J1, JD1, J2, JD2, JD3 ..... $t_p > 7D$;

(2) J3, JD4 ..... $t_p > 8D$;

(3) J4, JD5 ..... $t_p > 10D$; and

(4) J5, J6, JD6 ..... $t_p > 12D$.

For lesser values of t_p, the basic load shall be reduced in proportion to the decrease in t_p and the coach screw shall be considered as non-loadbearing if t_p is less than $4D$.

(b) *Lateral loads in end grain (see Figure 4.3(b))* The characteristic capacities for coach screws, laterally loaded in the end grain shall not exceed 60 percent of the values determined in accordance with Clause 4.5.2.1.

NOTE: The modification factor k_{13} accounts for end grain effects in Equation 4.5(2). See Clause 4.5.3.1.

4.5.2.2 *Type 2 joints*

Characteristic capacities for Type 2 joints are as follows:

(a) *Withdrawal loads from side grain (see Figure 4.4(a))* The characteristic capacities for coach screws, driven by hand or machine, axially loaded in withdrawal from the side grain of unseasoned timber are given in Table 4.13(A) and in seasoned timber are given in Table 4.13(B).

(b) *Withdrawal loads from end grain (see Figure 4.4(b))* The characteristic capacities for coach screws, driven by hand or machine, axially loaded in withdrawal from the end grain of unseasoned timber and seasoned timber shall not exceed 60 percent of the values given in Table 4.13(A) and Table 4.13(B).

NOTE: The modification factor k_{13} accounts for end grain effects in Equation 4.5(5). See Clause 4.5.3.2.

TABLE 4.13(A)

CHARACTERISTIC CAPACITY FOR A SINGLE COACH SCREW AXIALLY LOADED IN WITHDRAWAL IN SIDE GRAIN— UNSEASONED TIMBER

Joint group	Characteristic capacity (Q_k), N per mm penetration of thread					
	Shank diameter, mm					
	6	8	10	12	16	20
Jl	149	168	189	208	241	270
J2	118	133	152	168	193	218
J3	83	98	112	124	143	162
J4	66	69	77	83	98	112
J5	50	52	58	68	77	83
J6	39	39	42	48	58	64

Accessed by SWINBURNE UNIVERSITY OF TECHNOLOGY on 15 Aug 2007

@Seismicisolation

@Seismicisolation

TABLE 4.13(B)

CHARACTERISTIC CAPACITY FOR A SINGLE COACH SCREW AXIALLY LOADED IN WITHDRAWAL IN SIDE GRAIN— SEASONED TIMBER

Joint group	Characteristic capacity (Q_k), N per mm penetration of thread					
	Shank diameter, mm					
	6	8	10	12	16	20
JDl	185	210	232	261	301	338
JD2	147	166	191	210	241	272
JD3	104	122	141	154	179	205
JD4	83	87	97	104	124	139
JD5	62	66	73	85	97	104
JD6	48	48	54	60	73	79

4.5.2.3 *Maximum tensile capacity*

The maximum tensile capacity for a coach screw subject to direct axial loading shall not exceed the value appropriate to the diameter as given in Table 4.14.

TABLE 4.14

MAXIMUM TENSILE CAPACITY PER COACH SCREW SUBJECT TO AXIAL LOADS

Nominal diameter of coach screw mm	Maximum tensile load, (ϕN_{tc}) N
6	3 900
8	7 700
10	11 600
12	17 400
16	39 000
20	61 000

4.5.3 Design capacity of coach screwed joints

4.5.3.1 *Type 1 joints*

The design capacity, (ϕN_j), for a joint containing n coach screws to resist shear loads, similar to that illustrated in Figure 4.1(a) for Type 1 joints, shall satisfy—

$$(\phi N_j) \geq N^* \qquad \ldots 4.5(1)$$

where

$$(\phi N_j) = \phi\, k_1\, k_{13}\, k_{16}\, k_{17}\, n\, Q_{sk} \qquad \ldots 4.5(2)$$

and

N^* = design action effect in shear

ϕ = capacity factor (see Clause 2.3)

k_1 = the factor for duration of load for fasteners (see Clause 2.4.1.1)

k_{13} = 1.0 for coach screws in side grain

Accessed by SWINBURNE UNIVERSITY OF TECHNOLOGY on 15 Aug 2007

@Seismicisolation

@Seismicisolation

= 0.6 for coach screws in end grain

A2

k_{16} = 1.2 where the load is applied through metal side plates of adequate strength to transfer the load and the coach screws are a close fit to the holes in these plates
= 1.0 otherwise

k_{17} = factor for multiple coach screwed joints given in Table 4.11

n = number of coach screws in the connection

Q_{sk} = characteristic capacity defined in Clause 4.4.2.4 taking the thickness of the innermost member as equal to t_p, the depth of penetration of the coach screw into that member (see Figure 4.6).

4.5.3.2 *Type 2 joints*

The design capacity, (ϕN_j), for coach screw joints axially loaded in withdrawal shall satisfy—

$$(\phi N_j) \geq N^* \qquad \ldots 4.5(3)$$

where (ϕN_j) is the lesser of—

$$(\phi N_j) = n\,(\phi N_{tc}) \qquad \ldots 4.5(4)$$

$$(\phi N_j) = \phi\, k_{13}\, l_p\, n\, Q_k \qquad \ldots 4.5(5)$$

or where crushing under the head poses a limit to the strength

$$(\phi N_j) = \phi\, k_1\, k_7\, n\, f'_{pj}\, A_w \qquad \ldots 4.5(6)$$

and

N^* = design load action effect on the joint produced by strength limit states design loads (tension across the joint)

n = number of coach screws in the connection

(ϕN_{tc}) = design maximum tensile capacity of a single coach screw given in Table 4.14

ϕ = capacity factor (see Clause 2.3)

k_{13} = 1.0 for withdrawal from side grain
= 0.60 for withdrawal from end grain

l_p = depth of penetration of the threaded portion of the coach screw into the innermost member

Q_k = characteristic capacity given in Tables 4.13(A) and 4.13(B) see also Clause 4.4.5

k_1 = duration of load factor for fasteners (see Clause 2.4.1.1)

k_7 = length of bearing factor (see Table 2.10) where the length of bearing is taken as the diameter or side length of washer, see Table 4.12

f'_{pj} = characteristic bearing capacity for timber in joints, see Table C6

A_w = effective area of washer for bearing, see Table 4.12.

NOTE: The duration of load factor k_1 does not apply to withdrawal capacity for coach screws.

Accessed by SWINBURNE UNIVERSITY OF TECHNOLOGY on 15 Aug 2007

@Seismicisolation

@Seismicisolation

4.6 DESIGN OF SPLIT-RING FASTENER JOINTS

4.6.1 General

The requirements of this Clause 4.6 relate to split-ring fasteners of nominal size 64 mm and 102 mm.

An M12 bolt is used in conjunction with 64 mm fasteners and an M20 bolt is used with 102 mm fasteners. The bolts shall be fitted with washers in accordance with Clause 4.4.5.

NOTE: In computations for the design of the timber members, the projected area of the groove to receive the fastener in one member may be taken as 710 mm^2 for the 64 mm fastener and 1450 mm^2 for the 102 mm fastener.

4.6.2 Characteristic capacities for split-ring fasteners

The characteristic capacities for split-ring fasteners in unseasoned timber, Q_k are given in Table 4.17. The capacities apply to a connector unit comprising one split-ring in the contact faces of a timber-to-timber joint with the bolt and split ring in single shear.

4.6.3 Design capacity for split-ring fastener joints

The design capacity, (ϕN_j), for a joint containing n split-ring fasteners to resist shear loads shall satisfy—

$$(\phi N_j) \geq N^* \qquad \ldots 4.6(1)$$

where

$$(\phi N_j) = \phi\, k_1\, k_{15}\, k_{17}\, k_{18}\, n\, Q_k \qquad \ldots 4.6(2)$$

and

N^* = design action effect on joint in shear

ϕ = capacity factor (see Clause 2.3)

k_1 = factor for duration of load for joints (see Clause 2.4.1.1)

k_{15} = 1.0 for unseasoned timber
= factor for seasoned timber given in Table 4.15

k_{17} = factor for multiple joints given in Table 4.11

k_{18} = 1.0 for loads applied in compression along the grain, and for loads applied perpendicular to the grain
= factor for tension loads applied along the grain given in Table 4.16 (values of k_{18} for intermediate directions may be obtained by the use of Hankinson's formula—see Clause 4.4.2.4)

n = number of split ring fasteners in the joint resisting design action effect in shear

Q_k = characteristic capacity of a split ring fastener given in Table 4.17.

TABLE 4.15

FACTOR k_{15} FOR SPLIT-RING AND SHEAR-PLATE FASTENERS IN SEASONED TIMBER

Species group	JD1, JD2, JD3							JD4, JD5, JD6
Angle of load to grain	0°	15°	30°	45°	60°	75°	90°	any
Factor k_{15}	1.25	1.29	1.33	1.38	1.42	1.46	1.50	1.25

Accessed by SWINBURNE UNIVERSITY OF TECHNOLOGY on 15 Aug 2007

@Seismicisolation

@Seismicisolation

TABLE 4.16

FACTOR k_{18} FOR SPLIT-RING AND SHEAR-PLATE FASTENERS USED IN JOINTS SUBJECT TO TENSION LOADS

Size of split ring or shear plate mm	Factor k_{18}		
	Fastener remote from ends of members*	Fastener at ends of members	
		Seasoned timber	Unseasoned timber†
64, 67	1.0	1.0	0.5
102	0.8	0.6	0.3

* A fastener may be taken to occur in the middle of a member if the distance from the fastener to the end of the timber is greater than 10*D*, where *D* is the fastener diameter.

† Factors for seasoned timber may be used if the timber has negligible tendency to split (see Clause 4.1.5).

TABLE 4.17

CHARACTERISTIC CAPACITY FOR A SINGLE SPLIT-RING FASTENER IN UNSEASONED TIMBER

Joint group	Internal diameter of ring mm	Minimal nominal thickness of timber, mm		Characteristic capacity per fastener in single shear, N						
				Angle of load to grain						
		Split ring fastener in one side only	Split ring fasteners opposite in two sides	0°	15°	30°	45°	60°	75°	90°
J1	64	—	38	40 000	38 000	33 000	28 000	25 000	23 000	22 000
		25	50	60 000	57 000	50 000	43 000	37 000	37 000	33 000
	102	—	50	77 000	75 000	69 000	63 000	58 000	54 000	53 000
		38	75	105 000	102 000	94 000	86 000	78 000	74 000	72 000
J2	64	—	38	32 000	30 000	26 000	22 000	19 000	17 000	17 000
		25	50	48 000	45 000	39 000	33 000	29 000	26 000	26 000
	102	—	50	66 000	63 000	57 000	50 000	44 000	41 000	40 000
		38	75	90 000	86 000	77 000	67 000	60 000	56 000	56 000
J3	64	—	38	30 000	28 000	23 000	19 000	16 000	14 000	14 000
		25	50	45 000	42 000	35 000	29 000	24 000	22 000	21 000
	102	—	50	61 000	57 000	48 000	40 000	34 000	31 000	30 000
		38	75	78 000	73 000	63 000	53 000	46 000	42 000	40 000
J4	64	25	38	21 000	21 000	19 000	18 000	16 000	15 000	15 000
		—	50	29 000	29 000	27 000	24 000	22 000	21 000	21 000
		38	64	32 000	31 000	29 000	27 000	21 000	23 000	23 000
	102	—	50	47 000	45 000	39 000	34 000	30 000	27 000	26 000
		38	—	50 000	49 000	45 000	41 000	38 000	35 000	35 000
		50	75	62 000	59 000	53 000	46 000	41 000	37 000	36 000
J5	64	25	38	17 000	16 000	14 000	12 000	10 000	9 400	9 100
		—	50	25 000	24 000	21 000	18 000	16 000	14 000	14 000
		38	64	26 000	22 000	23 000	21 000	20 000	19 000	18 000
	102	—	50	37 000	35 000	31 000	27 000	24 000	22 000	21 000
		38	—	40 000	39 000	36 000	33 000	30 000	28 000	28 000
		50	75	46 000	44 000	40 000	36 000	33 000	30 000	30 000
J6	64	25	38	14 000	13 000	11 000	9 600	8 400	7 700	7 400
		—	50	20 000	19 000	17 000	15 000	13 000	12 000	11 000
		38	64	21 000	20 000	19 000	17 000	16 000	15 000	14 000
	102	—	50	31 000	29 000	26 000	22 000	19 000	18 000	17 000
		38	—	32 000	31 000	29 000	26 000	24 000	23 000	22 000
		50	75	37 000	36 000	33 000	29 000	26 000	25 000	24 000

Accessed by SWINBURNE UNIVERSITY OF TECHNOLOGY on 15 Aug 2007

@Seismicisolation

@Seismicisolation

4.6.4 Spacings, edge and end distances for split-ring fasteners

For split-ring fasteners, Table 4.18 provides recommended minimum values of spacings, edge and end distances which are defined and illustrated in Figure 4.12.

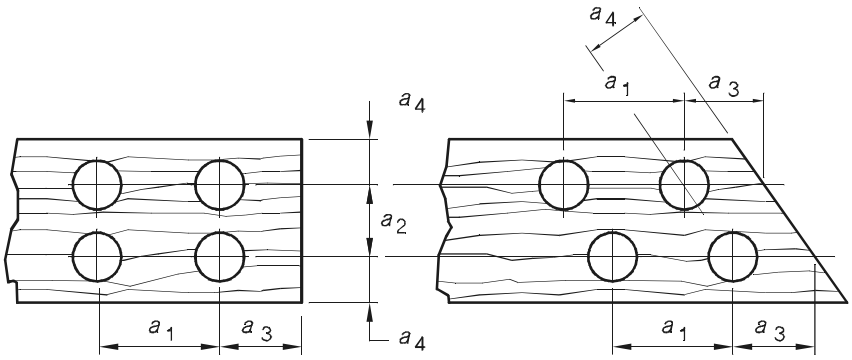

LEGEND:

a_1 = Spacing parallel to grain
a_2 = Spacing perpendicular to grain
a_3 = End distance
a_4 = Edge distance

FIGURE 4.12 SPACING, EDGE AND END DISTANCES FOR SPLIT-RING AND SHEAR-PLATE FASTENERS

TABLE 4.18

MINIMUM SPACINGS, EDGE AND END DISTANCES FOR SPLIT RINGS AND SHEAR PLATES

Spacing type	Minimum distance mm	
	D* = 64 mm and 67 mm	***D* = 102 mm***
End distance:		
tension numbers	150	180
Compression members	100	140
Edge distance:		
0° to 30° angle of load grain	45	70
30° to 90° angle of load grain:		
Compression side	70	95
opposite compression side	45	70
Between fasteners:		
0° to 30° angle of load to grain:		
spacing parallel to grain	180	230
spacing perpendicular to grain	90	140
30° to 90° angle to load to grain:		
spacing parallel to grain	90	140
spacing perpendicular to grain	115	165

* *D* is the nominal size of the split-ring or shear-plate fastener.

Accessed by SWINBURNE UNIVERSITY OF TECHNOLOGY on 15 Aug 2007

@Seismicisolation

@Seismicisolation

4.7 DESIGN OF SHEAR-PLATE FASTENER JOINTS

4.7.1 General

The requirements of this Clause 4.7 relate to shear-plate fasteners of nominal diameter 67 mm and 102 mm.

An M20 bolt is used in conjunction with a 67 mm diameter shear-plate fastener and an M24 bolt with a 102 mm diameter shear-plate fastener. Bolts shall be fitted with washers as specified in Clause 4.4.5.

NOTE: In computations for the design of the timber members, the projected area of the groove in the timber to receive the shear plate may be taken as 632 mm^2 for the 67 mm shear plate and 1600 mm^2 for the 102 mm shear plate.

4.7.2 Characteristic capacities for shear-plate fasteners

The characteristic capacities for shear-plate fasteners in unseasoned timber, Q_k, are given in Table 4.19. These capacities apply to a fastener unit comprising one shear plate in the contact face of a timber-to-steel joint with its bolt in single shear.

4.7.3 Design capacity for joints with shear plates

The design capacity, (ϕN_j), for a joint containing n shear-plate fasteners resisting shear load, shall satisfy—

$$(\phi N_j) \geq N^* \qquad \ldots 4.7(1)$$

where (ϕN_j) is the lesser of—

$$= n\,(\phi V_f);\ \text{or} \qquad \ldots 4.7(2)$$

$$= \phi\, k_1\, k_{15}\, k_{17}\, k_{18}\, n\, Q_k \qquad \ldots 4.7(3)$$

and

N^* = design action effect on joint

n = number of shear-plate fasteners in the joint

(ϕV_f) = fastener capacity in shear, see Table 4.19

ϕ = capacity factor (see Clause 2.3)

k_1 = factor for duration of load for joints (see Clause 2.4.1.1)

k_{15} = 1.0 for unseasoned timber
= factor for seasoned timber given in Table 4.15

k_{17} = factor for multiple fastener joints given in Table 4.11

k_{18} = 1.0 for loads applied in compression along the grain, and for loads applied perpendicular to the grain
= factor for tension loads applied along the grain, given in Table 4.16 (values of k_{18} for intermediate directions may be obtained by the use of Hankinson's formula—see Clause 4.4.2.4)

Q_k = characteristic capacity of shear-plate fasteners given in Table 4.19.

NOTE: Some characteristic capacities in Table 4.19 exceed the values given in Table 4.20 but are included for the purposes of interpolation.

4.7.4 Spacings, edge and end distances for shear-plate fasteners

For shear-plate fasteners, Table 4.18 gives recommended minimum values of spacings, edge and end distances which are defined and illustrated in Figure 4.12.

Accessed by SWINBURNE UNIVERSITY OF TECHNOLOGY on 15 Aug 2007

@Seismicisolation

@Seismicisolation

TABLE 4.19

CHARACTERISTIC CAPACITY FOR A SINGLE SHEAR PLATE FASTENER IN UNSEASONED TIMBER

Joint group	External diameter of shear plate	Bolt diameter	Minimum nominal thickness of timber, mm		Characteristic capacity per fastener (with bolt) in single shear, N						
			Shear plate fastener in one side only	Shear plate fastener opposite in two sides	Angle of load to grain						
					0°	15°	30°	45°	60°	75°	90°
Jl	67	M20	38	50	48 000	45 000	39 000	34 000	30 000	27 000	26 000
	102	M24	—	50	77 000	75 000	69 000	63 000	58 000	54 000	53 000
			50	75	105 000	102 000	94 000	86 000	78 000	74 000	72 000
J2	67	M20	38	50	38 000	37 000	32 000	27 000	23 000	21 000	20 000
	102	M24	—	50	66 000	63 000	57 000	50 000	44 000	41 000	40 000
			50	75	90 000	86 000	77 000	67 000	60 000	56 000	54 000
J3	67	M20	38	50	36 000	34 000	28 000	23 000	19 000	17 000	17 000
	102	M24	—	50	61 000	57 000	48 000	40 000	34 000	31 000	30 000
			50	75	83 000	78 000	66 000	54 000	46 000	42 000	40 000
J4	67	M20	38	50	29 000	27 000	23 000	18 000	16 000	14 000	13 000
	102	M24	—	50	36 000	35 000	33 000	30 000	27 000	26 000	25 000
			50	75	48 000	47 000	43 000	39 000	36 000	34 000	33 000
J5	67	M20	38	50	20 000	19 000	17 000	14 000	12 000	11 000	11 000
	102	M24	—	50	32 000	31 000	29 000	26 000	23 000	22 000	21 000
			50	75	44 000	42 000	39 000	34 000	31 000	29 000	28 000
J6	67	M20	38	50	17 000	16 000	14 000	11 000	9 900	9 000	8 700
	102	M24	—	50	26 000	25 000	23 000	21 000	19 000	18 000	17 000
			50	75	35 000	34 000	31 000	28 000	25 000	23 000	23 000

TABLE 4.20

BOLT CAPACITIES IN SHEAR

Bolt size	Shear values (single shear), N*	
	Threads included in shear plane (ϕV_{fN})	Threads excluded from shear plane (ϕV_{fX})
M20	44 600	62 300
M24	64 300	89 700

* The values apply for Grade 4.6 bolts and have been derived in accordance with AS 4100.

Accessed by SWINBURNE UNIVERSITY OF TECHNOLOGY on 15 Aug 2007

@Seismicisolation

@Seismicisolation

SECTION 5 PLYWOOD

5.1 GENERAL

The requirements of this Section 5 apply for plywood which has been manufactured and stress graded in accordance with AS/NZS 2269. Plywood whose properties have been in-grade evaluated in accordance with the requirements of AS/NZS 4063 and AS/NZS 2098.9 is acceptable provided all other requirements of AS/NZS 2269 are met.

All plywood manufactured in accordance with AS/NZS 2269 is Type A bonded.

Section modulus (Z) and second moment of area (I) shall be determined in accordance with AS/NZS 2269 and Appendix J.

NOTES:

1 The section modulus (Z) and the second moment of area (I) determined in accordance with AS/NZS 2269 are based on the application of parallel ply theory.

2 Values of section modulus (Z) and second moment of area (I) are given in Appendix J for standard constructions, together with a calibrated method of calculation.

5.2 DESIGN PROPERTIES

5.2.1 Characteristic strengths and elastic moduli

The characteristic strengths and moduli of elasticity and rigidity for various F-grade classifications of structural plywood are given in Table 5.1.

TABLE 5.1

STRUCTURAL PLYWOOD—CHARACTERISTIC PROPERTIES FOR F-GRADES (Moisture content 15% or less)

Stress Grade	Characteristic strength, MPa					Short duration average modulus of elasticity MPa	Short duration average modulus of rigidity MPa
	Bending (f'_b)	Tension (f'_t)	Panel Shear (f'_s)	Compression in the plane of the sheet (f'_c)	Bearing normal to the plane of the sheet (f'_p)	(E)	(G)
F34	100	60	6.8	75	31	21 500	1 075
F27	80	50	6.8	60	27	18 500	925
F22	65	40	6.8	50	23	16 000	800
F17	50	30	6.8	40	20	14 000	700
F14	40	25	6.1	30	15	12 000	625
F11	35	20	5.3	25	12	10 500	525
F8	25	15	4.7	20	9.7	9 100	455
F7	20	12	4.2	15	7.7	7 900	345

5.2.2 Capacity factor

Unless otherwise specified by the manufacturer, the capacity factor, ϕ, given in Table 2.5 shall be used in the computation of the design capacities for plywood structural elements.

Accessed by SWINBURNE UNIVERSITY OF TECHNOLOGY on 15 Aug 2007

@Seismicisolation

@Seismicisolation

5.3 MODIFICATION FACTORS

5.3.1 General

Modification factors for strength and stiffness shall be taken from the relevant clauses in Section 2 and from the factors given in Tables 5.2 to 5.4.

5.3.2 Duration of load

The modification factors for duration of load k_1, stiffness j_2 and j_3, given in Clause 2.4.1 shall be used where appropriate.

5.3.3 Moisture condition

Where plywood is subjected to conditions such that the average moisture content for a 12-month period will exceed 15 percent, the modification factors k_{19} and j_6 given in Tables 5.2(A) and 5.2(B) respectively shall be used.

TABLE 5.2(A)

MOISTURE CONTENT FACTORS FOR PLYWOOD—STRENGTH FACTOR k_{19}

Type of stress	Factor k_{19}	
	Moisture content* 15% or less	Moisture content* 25% or more
Bending	1.0	0.6
Tension in plane of sheet	1.0	0.7
Shear	1.0	0.6
Compression in plane of sheet	1.0	0.4
Compression normal to plane of sheet	1.0	0.45

* For moisture contents between 15 and 25%, use linear interpolation to obtain k_{19} factor.

TABLE 5.2(B)

MOISTURE CONTENT FACTORS FOR PLYWOOD—STIFFNESS FACTOR j_6

Type of stiffness	Factor j_6	
	Moisture content* 15% or less	Moisture content* 25% or more
Modulus of elasticity	1.0	0.8
Modulus of rigidity	1.0	0.6

* For moisture contents between 15 and 25%, use linear interpolation to obtain j_6 factor.

5.3.4 Temperature

The provisions of Clause 2.4.3 for seasoned timber shall apply in a similar manner to structural plywood.

5.3.5 Plywood assembly factor

The values of the characteristic strengths and moduli given in Table 5.1, other than for shear, refer to properties of plywood veneer in the direction of the grain. In order to use these values to derive the properties of plywood formed from several layers of veneer, computations shall be based on the section properties determined in accordance with AS/NZS 2269 and the relevant sections of this Standard. The shear value characteristic strength f_s' refers to the panel shear (in-plane shear) value of the plywood.

Additionally, characteristic strengths and stiffnesses shall be modified by plywood assembly factor g_{19} given in Table 5.3, 5.4 or 5.5 as appropriate.

Accessed by SWINBURNE UNIVERSITY OF TECHNOLOGY on 15 Aug 2007

@Seismicisolation

@Seismicisolation

5.4 LOADING NORMAL TO THE PLANE OF THE PLYWOOD PANEL

5.4.1 General

The design capacity and deflection for a plywood panel when subject to design loads that act normal to the plane of the plywood shall satisfy the requirements of Clauses 5.4.2 to 5.4.5.

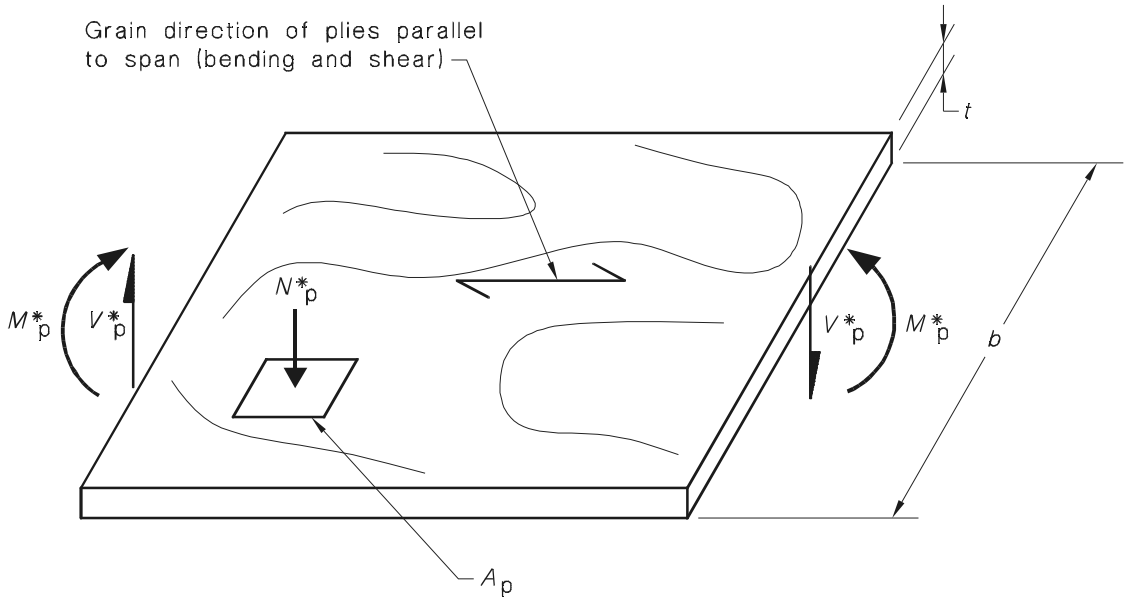

FIGURE 5.1 NOTATION FOR BEARING AND SHEAR NORMAL TO THE FACE OF THE PLYWOOD PANEL AND FOR FLATWISE BENDING

5.4.2 Bending strength

The design capacity of plywood in bending (ϕM_p), for strength limit state, shall satisfy—

$$(\phi M_p) \geq M_p^* \qquad \ldots 5(1)$$

where

$$(\phi M_p) = \phi\, k_1\, k_{18}\, g_{19} \left\lfloor f_b'\, Z_p \right\rfloor \qquad \ldots 5(2)$$

and

M_p^* = design action effect for flatwise bending of plywood as shown in Figure 5.1

ϕ = capacity factor of plywood (see Clause 2.3)

k_1 = modification factor for duration of load (see Clause 2.4.1.1)

k_{19} = modification factor for moisture condition (see Table 5.2(A))

g_{19} = modification factor for plywood assembly (see Table 5.3)

f_b' = characteristic strength in bending

Z_p = section modulus of plywood = I_p/y_p

where

I_p = second moment of area of parallel plies whose grain direction is parallel to the span

y_p = distance from the neutral axis to the extreme fibre of the outermost parallel ply.

NOTES:

1 The values of f_b' for plywood assigned an F-grade classification are given in Table 5.1.

2 Values of I_p are given in Appendix J for standard structural plywood constructions.

@Seismicisolation

Accessed by SWINBURNE UNIVERSITY OF TECHNOLOGY on 15 Aug 2007

@Seismicisolation

TABLE 5.3

ASSEMBLY FACTORS g_{19} FOR BEARING AND SHEAR NORMAL TO THE FACE OF THE PLYWOOD PANEL AND IN FLATWISE BENDING

Property	Direction of face plies	Assembly factor g_{19}
Bending strength	perpendicular to span	
	—3 ply	1.2
	—5 ply or more	1.0
	parallel to span	1.0
Shear strength	any orientation	0.4
Bearing strength	any orientation	1.0
Bending deflection	parallel or perpendicular to span	1.0
Shear deformation	parallel or perpendicular to span	1.0

5.4.3 Shear strength (interlamina shear)

The design capacity of plywood in beam shear (ϕV_p), for strength limit state, shall satisfy—

$$(\phi V_p) \geq V_p^* \qquad \ldots 5(3)$$

where

$$(\phi V_p) = \phi\, k_1\, k_{19}\, g_{19}\, [f_s'\, A_s] \qquad \ldots 5(4)$$

and

V_p^* = design action effect for shear normal to the face of the plywood panel as shown in Figure 5.1

ϕ = capacity factor (see Clause 2.3)

k_1 = modification factor for duration of load (see Clause 2.4.1.1)

k_{19} = modification factor for moisture condition (see Table 5.2(A))

g_{19} = modification factor for plywood assembly (see Table 5.3)

f_s' = characteristic strength in panel shear (in-plane)

A_s = $\frac{2}{3}(bt)$ (see Figure 5.1), for shear in bending;

or

A_s = full shear area, for local (punching) shear

where

b = breadth of plywood

t = full thickness of plywood

NOTE: The values of f_s' for plywood assigned an F-grade classification are given in Table 5.1.

5.4.4 Bearing strength

The design capacity of plywood in bearing (ϕN_p), for strength limit state, shall satisfy—

$$(\phi N_p) \geq N_p^* \qquad \ldots 5(5)$$

where

$$(\phi N_p) = \phi\, k_1\, k_7\, k_{19}\, g_{19}\, \lfloor f_p'\, A_p \rfloor \qquad \ldots 5(6)$$

Accessed by SWINBURNE UNIVERSITY OF TECHNOLOGY on 15 Aug 2007

@Seismicisolation

@Seismicisolation

and

N_p^* = design action effect for bearing normal to the face of the plywood panel as shown in Figure 5.1

ϕ = capacity factor (see Clause 2.3)

k_1 = modification factor for duration of load (see Clause 2.4.1.1)

k_7 = modification factor for length of bearing (see Table 2.10)

k_{19} = modification factor for moisture condition (see Table 5.2(A))

g_{19} = modification factor for plywood assembly (see Table 5.3)

f_p' = characteristic strength in compression normal to the plane of the panel

A_p = bearing area under the design loads.

NOTE: The values of f_p' for plywood assigned an F-grade classification are given in Table 5.1.

5.4.5 Deflection in bending

In calculating deflection, the cross-section stiffness shall be based on the second moment of area (I) determined in accordance with AS/NZS 2269 (see Appendix J), the characteristic modulus of elasticity values given in Table 5.1, the moisture content stiffness factor j_6 given in Table 5.2(B) and the assembly factor g_{19} given in Table 5.3. The duration of load factor j_2 given in Table 2.8 shall be used in computing deflections.

5.5 LOADING IN THE PLANE OF THE PLYWOOD PANEL

5.5.1 General

The design capacity and deformation for a plywood panel when subject to design loads that act in the plane of the plywood, as shown in Figure 5.2, shall satisfy the requirements of Clauses 5.5.2 to 5.5.8.

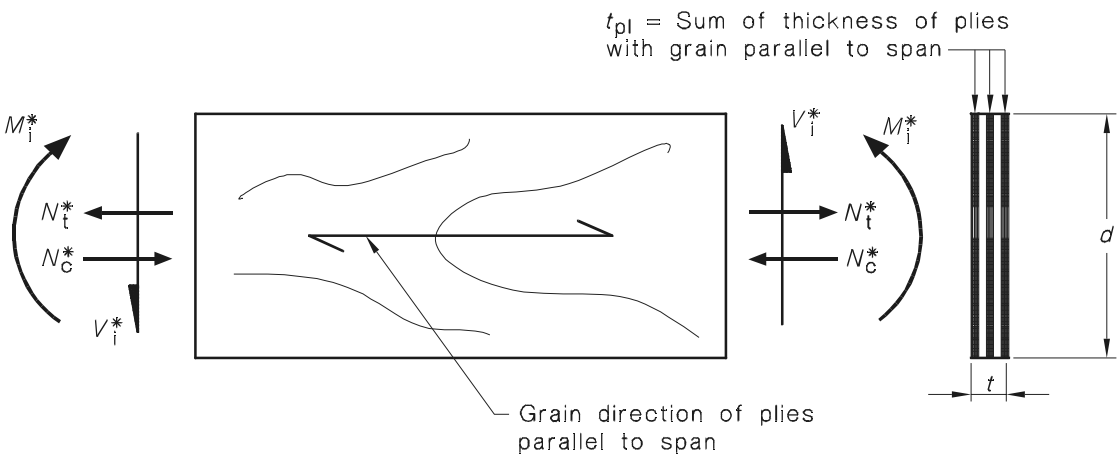

FIGURE 5.2 NOTATION FOR SHEAR, COMPRESSION AND TENSION ACTING IN THE PLANE OF A PLYWOOD PANEL AND FOR EDGEWISE BENDING

5.5.2 Bending strength

The design capacity of plywood in bending, for strength limit state, shall satisfy—

$$(\phi M_i) \geq M_i^* \qquad \ldots 5(7)$$

where

Accessed by SWINBURNE UNIVERSITY OF TECHNOLOGY on 15 Aug 2007

@Seismicisolation

@Seismicisolation

$$(\phi M_i) = \phi\, k_1\, k_{12}\, k_{19}\, g_{19}\, [f'_b\, Z_i] \qquad \ldots 5(8)$$

and

M_i^* = design action effect for edgewise bending of the plywood panel as shown in Figure 5.2

ϕ = capacity factor (see Clause 2.3)

k_1 = modification factor for duration of load (see Clause 2.4.1.1)

k_{12} = modification factor for stability (see Appendix J)

k_{19} = modification factor for moisture condition (see Table 5.2(A))

g_{19} = modification factor for plywood assembly (see Table 5.4)

f'_b = characteristic strength in bending

Z_i = section modulus of plywood

$$= \frac{t_{pl}\, d^2}{6}$$

where

t_{pl} = the sum of thicknesses of veneers having their grain parallel to the span (see Figure 5.2)

d = overall depth

NOTE: The values of f'_b for plywood assigned an F-grade classification are given in Table 5.1.

TABLE 5.4

ASSEMBLY FACTORS g_{19} FOR LOADING IN THE PLANE OF THE SHEET OF PLYWOOD (EDGEWISE BENDING)

Property	Direction of grain of plies with respect to stress direction or span	Portion of cross-section considered (effective cross-section area)	Assembly factor g_{19}
Compression and bending strength	parallel or perpendicular	parallel plies only	1.0
	±45°	full cross-section	0.34
Tension strength	parallel or perpendicular	parallel plies only	1.0
	±45°	full cross-section	0.17
Shear strength	parallel or perpendicular	full cross-section	1.0
	±45°	full cross-section	1.5
Shear deformation	parallel or perpendicular	full cross-section	1.0
Bending deflection	parallel or perpendicular	parallel plies only	1.0
Deformation in compression or tension	parallel or perpendicular	parallel plies only	1.0
	±45°	full cross-section	0.17

5.5.3 Shear strength

The design capacity of plywood in shear, for strength limit state, shall satisfy—

$$(\phi V_i) \geq V_i^* \qquad \ldots 5(9)$$

where

$$(\phi V_i) = \phi\, k_1\, k_{12}\, k_{19}\, g_{19}\, [f'_s\, A_s] \qquad \ldots 5(10)$$

and

V_i^* = design action effect for shear in the plane of the plywood panel as shown in Figure 5.2

@Seismicisolation

Accessed by SWINBURNE UNIVERSITY OF TECHNOLOGY on 15 Aug 2007

@Seismicisolation

ϕ = capacity factor of plywood (see Clause 2.3)

k_1 = modification factor for duration of load (see Clause 2.4.1.1)

k_{12} = modification factor for stability (see Appendix J)

k_{19} = modification factor for moisture condition (see Table 5.2(A))

g_{19} = modification factor for plywood assembly (see Table 5.4)

f_s' = characteristic strength in panel shear

A_s = $\frac{2}{3}(dt)$ (see Figure 5.2), for shear in bending;

or

A_s = (dt) for localized shear

where

d = overall depth of plywood

t = full thickness of plywood.

NOTE: The values of f_s' for plywood assigned an F-grade classification are given in Table 5.1.

5.5.4 Tension strength

The design capacity of plywood in tension for strength limit state, shall satisfy—

$$(\phi N_t) \geq N_t^* \qquad \ldots 5(11)$$

where

$$(\phi N_t) = \phi\, k_1\, k_{19}\, g_{19}\, [f_t'\, A_t] \qquad \ldots 5(12)$$

and

N_t^* = design action effect for tension in the plane of the plywood as shown in Figure 5.2

ϕ = capacity factor of plywood (see Clause 2.3)

k_1 = modification factor for duration of load (see Clause 2.4.1.1)

k_{19} = modification factor for moisture condition (see Table 5.2(A))

g_{19} = modification factor for plywood assembly (see Table 5.4)

f_t' = characteristic strength in tension

A_t = effective cross-sectional area defined in Table 5.4 which for parallel plies only is d times the sum of thicknesses of veneers having their grain parallel to the direction of load.

NOTE: The values of f_t' for plywood assigned an F-grade classification are given in Table 5.1.

5.5.5 Compression strength

The design capacity of plywood in compression (ϕN_c), for strength limit state shall satisfy—

$$(\phi N_c) \geq N_c^* \qquad \ldots 5(13)$$

where

$$(\phi N_c) = \phi\, k_1\, k_{12}\, k_{19}\, g_{19}\, [f_c'\, A_c] \qquad \ldots 5(14)$$

and

N_c^* = design action effect for compression in the plane of the plywood panel as shown in Figure 5.2

ϕ = capacity factor of plywood (see Clause 2.3)

k_1 = modification factor for duration of load (see Clause 2.4.1.1)

@Seismicisolation

Accessed by SWINBURNE UNIVERSITY OF TECHNOLOGY on 15 Aug 2007

@Seismicisolation

k_{12} = modification factor for stability (see Appendix J)

k_{19} = modification factor for moisture condition (see Table 5.2(A))

g_{19} = modification factor for plywood assembly (see Table 5.4)

f'_c = characteristic strength in compression

A_c = effective cross-sectional area as defined in Table 5.4 which for parallel plies only is d times the sum of thicknesses of veneers having their grain parallel to direction of load.

NOTE: The values of f'_c for plywood assigned an F-grade classification are given in Table 5.1.

5.5.6 Combined loads

For the case of combined loads, the following interaction criteria shall be satisfied:

(a) For combined compression, bending and shear—

A2

$$\left(\frac{N_c^*}{\phi N_c}\right)+\left(\frac{M_i^*}{\phi M_i}\right)^2+\left(\frac{V_i^*}{\phi V_i}\right)\leq 1.0 \qquad \ldots 5(15)$$

(b) For combined tension, bending and shear—

A2

$$\left(\frac{N_t^*}{\phi N_t}\right)+\left(\frac{M_i^*}{\phi M_i}\right)^2+\left(\frac{V_i^*}{\phi V_i}\right)\leq 1.0 \qquad \ldots 5(16)$$

5.5.7 Deflection in bending

In calculating deflection, the cross-section stiffness shall be based on the second moment of area (I) of the plies parallel to the direction of span, the characteristic modulus of elasticity values given in Table 5.1, the moisture content stiffness factor j_6 given in Table 5.2(B) and the assembly factor g_{19} given in Table 5.4. The duration of load factor j_2 given in Table 2.7 shall be used in calculating deflections.

5.5.8 Shear deformation

In calculating shear deformations, the cross-section stiffness shall be based on the gross cross-section, using the characteristic moduli values given in Table 5.1, the moisture factor j_6 given in Table 5.2(B) and the assembly factor g_{19} given in Table 5.4. The duration of load factor j_2 given in Table 2.6 shall be applied.

5.6 JOINTS IN COMPOSITE PLYWOOD TO TIMBER CONSTRUCTION

5.6.1 Nailed and screwed joints

Recommendations for the design strength and stiffness of nailed and screwed joints between plywood and solid timber are given in Appendix C.

5.6.2 Shear strength at glued interfaces

The design capacity of a glued interface in shear between a plywood section and timber section (ϕV_{sj}), for strength limit state shall satisfy—

$$(\phi V_{sj}) \geq V_{sj}^* \qquad \ldots 5(17)$$

where

$$(\phi V_{sj}) = \phi\, k_1\, k_{19}\, g_{19}\, \lfloor f'_s\, A_{sj} \rfloor \qquad \ldots 5(18)$$

and

V_{sj}^* = design action effect for shear at the glued interface of the plywood and timber sections

ϕ = capacity factor of plywood (see Clause 2.3)

@Seismicisolation

Accessed by SWINBURNE UNIVERSITY OF TECHNOLOGY on 15 Aug 2007

@Seismicisolation

k_1 = modification factor for duration of load (see Clause 2.4.1.1)

k_{19} = modification factor for moisture condition (see Table 5.2(A))

g_{19} = modification factor for assembly appropriate to the type of construction (see Table 5.5)

f_s' = characteristic strength in shear

A_{sj} = area at glued interface as shown in Figures 5.3, 5.4 and 5.5 and defined in Table 5.5.

NOTE: The values of f_s' for plywood assigned an F-grade classification are given in Table 5.1.

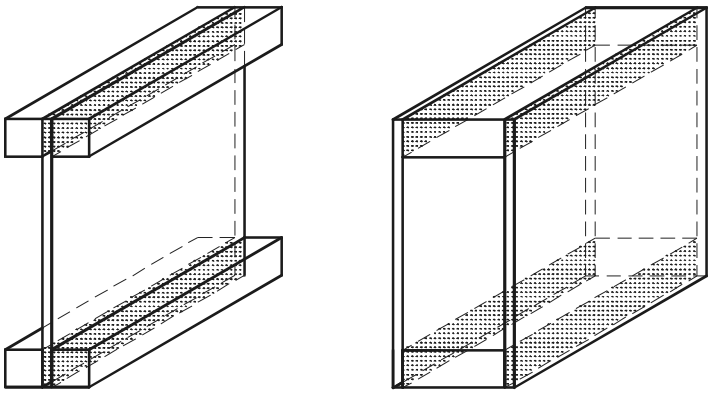

FIGURE 5.3 BEAMS WITH FULL DEPTH WEB

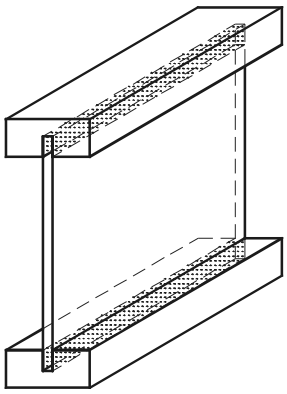

FIGURE 5.4 BEAMS WITH WEBS PARTIALLY EMBEDDED INTO FLANGES

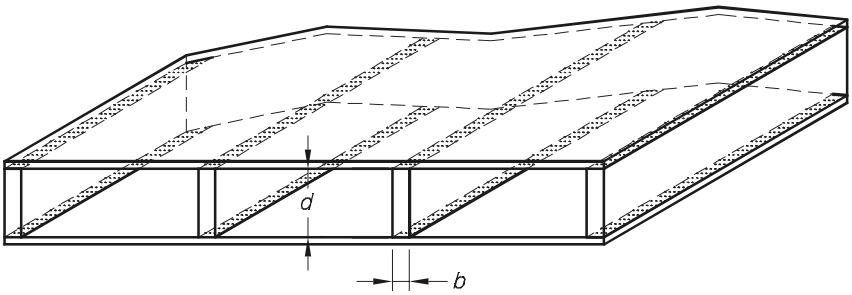

FIGURE 5.5 STRESSED SKIN PANELS

Accessed by SWINBURNE UNIVERSITY OF TECHNOLOGY on 15 Aug 2007

@Seismicisolation

Accessed by SWINBURNE UNIVERSITY OF TECHNOLOGY on 15 Aug 2007
@Seismicisolation

TABLE 5.5

ASSEMBLY FACTOR g_{19} FOR GLUED INTERFACES

Type of construction	Position of shear	Stress direction with respect to grain direction in face plies	Assembly factor	
			Area to be considered	Modification factor g_{19}
Box beam and I-beams with plywood webs	Full depth web-shear between web and flanges. See Figure 5.3	Parallel or perpendicular	Full area of contact between plywood and flange	0.2 × characteristic strength
		±45° (see Table 5.4)	Full area of contact between plywood and flange	0.2 × characteristic strength
	Webs partially embedded in flanges—shear between web and flanges. See Figure 5.4	Parallel or perpendicular	Full area of contact between plywood and flange	0.4 × characteristic strength
Stressed skin panels	Shear between plywood and framing members. See Figure 5.5. End nogging shall be used where the depth of framing members exceeds twice their breadth	Parallel or perpendicular	Full area of contact between plywood and members	0.4 × characteristic shear strength for interior framing members
				0.2 × characteristic shear strength for edge framing members
		±45° (see Table 5.4)	Full area of contact between plywood and framing member	0.4 × characteristic shear strength for interior framing members
				0.2 × characteristic shear strength for edge framing members

@Seismicisolation

@Seismicisolation

SECTION 6 ROUND TIMBERS

6.1 GENERAL

Whether naturally round timbers are used as simple structural members, i.e. as poles or piles or as elements of a composite structure, the design procedures shall be similar to those given in Section 3, subject to the provisions of Clauses 6.2, 6.3, 6.4 and 6.5.

6.2 CHARACTERISTIC STRENGTHS AND ELASTIC MODULI

The characteristic strengths and elastic moduli for untrimmed logs, poles or piles which conform in quality to the grade requirements specified in AS 2209, shall, unless verified by in-grade testing, be those given in Tables 2.3 and 2.4. For any particular species, the appropriate stress grade is derived from its strength group as given in Table 6.1.

TABLE 6.1

ROUND TIMBERS GRADED TO AS 2209—RELATIONSHIP BETWEEN STRENGTH GROUPS AND F-GRADES

Strength group	Stress grade
S1	F34
S2	F27
S3	F22
S4	F17
S5	F14
S6	F11
S7	F8

NOTE: The equivalence expressed is based on the assumption that all poles or logs are cut from mature trees. Factors for immaturity are given in Clause 6.4.1.

6.3 DESIGN

6.3.1 Bending strength

The design capacity in bending of round timbers (ϕM), for strength limit state, shall satisfy—

$$(\phi M) \geq M^* \qquad \ldots 6(1)$$

where

$$(\phi M) = \phi\, k_1\, k_4\, k_6\, k_9\, k_{12}\, k_{20}\, k_{21}\, k_{22}\, \left[f'_b\, Z\right] \qquad \ldots 6(2)$$

and

M^* = design action effect in bending produced by strength limit states design loads

ϕ = capacity factor (see Clause 2.3)

k_1 to k_9 = strength modification factors given in Section 2

k_{12} = stability factor
= 1 for round timbers

k_{20} = immaturity factor as per Clause 6.4.1

k_{21} = shaving factor as per Clause 6.4.2

k_{22} = processing factor (0.85 if poles are steamed; otherwise 1.0)

f'_b = characteristic strength in bending

Accessed by SWINBURNE UNIVERSITY OF TECHNOLOGY on 15 Aug 2007

@Seismicisolation

@Seismicisolation

Z = section modulus of a round timber

$= \dfrac{\pi d_p^3}{32}$, where d_p = pole diameter at the relevant section.

NOTE: The characteristic strength, f_b', can be evaluated by in-grade testing.

6.3.2 Shear strength

The design capacity in shear of a round timber (ϕV) shall satisfy—

$$(\phi V) = V^* \qquad \ldots 6(3)$$

where

$$(\phi V) = \phi\, k_1\, k_4\, k_6\, k_{20}\, [f_s'\, A_s] \qquad \ldots 6(4)$$

and

V^* = design action effect in shear

ϕ = capacity factor (see Clause 2.3)

k_1, k_4, k_6 = modification factors given in Section 2

k_{20} = immaturity factor (Table 6.2)

f_s' = characteristic strength in shear

A_s = shear plane area

$= \dfrac{3\,\pi\, d_p^2}{16}$, where d_p = smallest end pole diameter.

6.3.3 Compressive strength

The design capacity in compression of round timber columns (ϕN_c), for strength limit state, shall satisfy—

$$(\phi N_c) \geq N^* \qquad \ldots 6(5)$$

where

$$(\phi N_c) = \phi\, k_1\, k_4\, k_6\, k_9\, k_{12}\, k_{20}\, k_{21} [f_c'\, A_c] \qquad \ldots 6(6)$$

and

N^* = design action effect in compression

ϕ = capacity factor (see Clause 2.3)

k_1 to k_9 = product modification factors given in Section 2

k_{12} = stability factor, determined in accordance with Clause 3.3.3, except that the slenderness coefficient $S = 1.15\ L/d_p$ where L = distance between effective restraints in any plane and d_p = nominal mid-length diameter between points of lateral restraint

k_{20} = immaturity factor as per Clause 6.4.1

k_{21} = shaving factor as per Clause 6.4.1

f_c' = characteristic strength in compression parallel to the grain

A_c = section area of a round timber columns

$= \dfrac{\pi\, d_p^2}{4}$, nominal mid-length diameter.

NOTES:

1 The characteristic strength, f_c', can be evaluated by in-grade testing.

2 The nominal mid-length diameter may be calculated from the small end diameter and the taper as specified in AS 2209.

Accessed by SWINBURNE UNIVERSITY OF TECHNOLOGY on 15 Aug 2007

@Seismicisolation

@Seismicisolation

6.3.4 Deflections

Deflection calculations shall take into account the modification factors in Clause 2.5.1.2.

6.4 ADDITIONAL MODIFICATION FACTORS

6.4.1 Factor for immaturity

For poles having mid-length diameters less than 250 mm, due allowance shall be made for the properties of immature timber. For eucalypt and corymbia species and softwoods, this may be done through multiplication of design strength and stiffness by the factors k_{20} and j_9 respectively given in Tables 6.2(A) and (B) (see Note).

NOTE: For hardwood species other than eucalypts and corymbias, conservative assumptions with respect to k_{20}, j_9, and k_{21} should be used in design unless special investigations have been undertaken to derive accurate values.

TABLE 6.2(A)

IMMATURITY FACTORS—
IMMATURITY FACTOR k_{20} FOR DESIGN CAPACITY

Species	Factor k_{20} for capacities							
	Pole diameter at mid-length, mm, (d_p)							
	75	100	125	150	175	200	225	250
Eucalypt and Corymbia	0.80	0.90	1.00	1.00	1.00	1.00	1.00	1.00
Softwoods	0.70	0.75	0.80	0.85	0.90	0.95	1.00	1.00

TABLE 6.2(B)

IMMATURITY FACTORS—
IMMATURITY FACTOR j_9 FOR STIFFNESS

Species	Factor j_9 for stiffness							
	Pole diameter at mid-length, mm, (d_p)							
	75	100	125	150	175	200	225	250
Eucalypt and Corymbia	0.80	0.90	1.00	1.00	1.00	1.00	1.00	1.00
Softwoods	0.70	0.75	0.80	0.85	0.90	0.95	1.00	1.00

6.4.2 Shaving factor

For timber members in natural pole form, the design strength shall be reduced if the poles have been shaved. For poles that have been shaved to a smooth cylindrical form, the shaving factor k_{21} shall be taken as specified in Table 6.3. In addition, it shall be assumed that the effect of shaving will be to reduce the stiffness by 5 percent (see Note to Clause 6.4.1).

Accessed by SWINBURNE UNIVERSITY OF TECHNOLOGY on 15 Aug 2007

@Seismicisolation

@Seismicisolation

TABLE 6.3

SHAVING FACTOR k_{21}

Stress	Factor k_{21}	
	Eucalypt and corymbia species	Softwoods
Bending	0.85	0.75
Compression parallel to grain	0.95	0.90
Compression perpendicular to grain and shear	1.00	1.00
Tension	0.85	0.75

6.5 DESIGN DETAILS

6.5.1 Effective cross-section of untreated timber

Unless subjected to adequate preservative treatment in accordance with an approved Standard, the sapwood of all timbers shall be disregarded in assessing the effective structural cross-section of poles at or above the ground-line where exposed to the weather or when used as piles above permanent water level.

6.5.2 Moisture content of timbers in ground contact

Irrespective of whether poles are used in the unseasoned, partially seasoned or fully seasoned condition, it shall be assumed that all parts of poles within 1 m of a ground-line contact are, for design purposes, in the unseasoned condition.

6.5.3 Joints

Design of joints shall be in accordance with Section 4.

Accessed by SWINBURNE UNIVERSITY OF TECHNOLOGY on 15 Aug 2007

@Seismicisolation

@Seismicisolation

SECTION 7 GLUED-LAMINATED TIMBER CONSTRUCTION

7.1 GENERAL

This Section shall be applied in conjunction with Sections 2 and 3. The provisions of this Section apply specifically to glued-laminated timber members manufactured in accordance with AS/NZS 1328.

Appendix E contains further design methods including methods for taper-cut and curved beams.

Where any glued-laminated timber is likely to be exposed to water or to damp conditions, only a phenolic glue shall be used in its manufacture.

7.2 DESIGN

The procedures given in Section 3 and Appendix E shall generally apply for design with glued-laminated timber except that values of properties and factors given in this Section shall apply.

Design of joints using glued-laminated timber shall be in accordance with the requirements of Section 4.

7.3 DESIGN PROPERTIES

7.3.1 Characteristic strengths and elastic moduli

The characteristic strengths and moduli of elasticity and rigidity for various GL-grade classifications of glued-laminated timber are given in Table 7.1.

Values of the characteristic strengths related to the strength groups that apply to the computation of timber member design capacities in bearing both perpendicular and parallel to the grain, in tension parallel to the grain, and in shear at joint details, are given in Table 2.4.

7.3.2 Capacity factor

Unless otherwise specified by the manufacturer, the capacity factor, ϕ, to be used in the computation of the design capacities for glue-laminated timber structural elements, shall comply with the values given in Table 2.5.

TABLE 7.1

CHARACTERISTIC STRENGTHS AND ELASTIC MODULI FOR HORIZONTALLY LAMINATED GLULAM GRADES

Stress grade	Characteristic strengths (MPa)				Elastic moduli (MPa)	
	Bending (f'_b)	Tension parallel to grain (f'_t)	Shear in beam (f'_s)	Compression parallel to grain (f'_c)	Short duration average modulus of elasticity parallel to the grain (*E*)	Short duration average modulus of rigidity for beams (*G*)
GL18	50	25	5.0	50	18500	1230
GL17	42	21	3.7	35	16700	1110
GL13	33	16	3.7	33	13300	900
GL12	25	12	3.7	29	11500	770
GL10	22	11	3.7	26	10000	670
GL8	19	10	3.7	24	8000	530

NOTE: Glulam grade designations are based on the modulus of elasticity. Each of the grades may be relevant to specific products. Further information should be sought from appropriate industry associations.

Accessed by SWINBURNE UNIVERSITY OF TECHNOLOGY on 15 Aug 2007

@Seismicisolation

@Seismicisolation

7.3.3 Non-GL-grade properties

The use of other characteristic properties for glued-laminated timber is acceptable provided the establishment of such characteristic properties is performed in accordance with AS/NZS 4063.

7.4 MODIFICATION FACTORS

7.4.1 General

Modification factors for strength and stiffness other than those specified in this Clause 7.4 shall comply with Section 2.

7.4.2 Duration of load

The modification factors for duration of load k_1 and for stiffness, j_2 and j_3 given in Clause 2.4.1 shall apply where appropriate.

NOTE: Long-term creep is dependent upon size, grade, environmental conditions and surface coatings.

7.4.3 Strength sharing between parallel members

The strength sharing factor k_9, for glued-laminated timber used in parallel systems shall be taken as unity, i.e. $k_9 = 1.0$.

7.4.4 Size factor

Except where in-grade testing demonstrates a different effect of size, the capacity shall be modified by the size factor k_{11} as given by the following:

(a) For bending, k_{11} shall be 1.

(b) For tension parallel to grain, k_{11} shall be the lesser of $(150/d)^{0.167}$ or 1.

(c) For shear, k_{11} shall be 1.0.

(d) For compression, k_{11} shall be 1.0.

(e) For tension perpendicular to grain, $k_{11} = (V_o/V)^{0.2}$ where $V_o = 10^7$ (a reference volume) and V is the volume of timber stressed above 80 percent of the maximum value in tension perpendicular to the grain.

NOTE: Where a glued-laminated timber component is used as part of a fabricated member, the appropriate size factor to the action of the glued-laminated timber component should be used. For example, a glued-laminated timber tension flange in a box beam would use k_{11} for a tension member using the cross-sectional dimensions of the glued-laminated timber tension flange.

7.4.5 Stability factor

The procedures given in Section 3 for calculation of the stability factor, k_{12}, shall generally apply for design with glued-laminated timber except that the material constant, (ρ_b or ρ_c), for beams and columns shall be as given in Tables 7.2(A) and 7.2(B).

Accessed by SWINBURNE UNIVERSITY OF TECHNOLOGY on 15 Aug 2007

@Seismicisolation

@Seismicisolation

TABLE 7.2(A)

MATERIAL CONSTANT, ρ_b, FOR BEAMS

Stress grade	Ratio temporary load / total load, *r*				
	0	0.25	0.5	0.75	1.0
	Material constant, ρ, for beams *				
GL18	0.94	0.94	0.90	0.88	0.86
GL17	0.90	0.90	0.87	0.85	0.83
GL13	0.90	0.90	0.86	0.84	0.83
GL12	0.84	0.84	0.81	0.79	0.78
GL10	0.85	0.85	0.81	0.79	0.78
GL8	0.88	0.88	0.84	0.82	0.81

* These values are derived from Equation E2(1) using values of *E* and f'_b given in Table 7.1

TABLE 7.2(B)

MATERIAL CONSTANT, ρ_c, FOR COLUMNS

Stress grade	Ratio temporary load / total load, *r*				
	0	0.25	0.5	0.75	1.0
	Material constant, ρ, for columns *				
GL18	1.13	1.13	1.07	1.04	1.02
GL17	1.02	1.02	0.97	0.94	0.92
GL13	1.09	1.09	1.04	1.01	0.99
GL12	1.10	1.10	1.04	1.01	0.99
GL10	1.11	1.11	1.06	1.03	1.00
GL8	1.18	1.18	1.12	1.09	1.06

* These values are derived from Equation E2(3) using values of *E* and f'_c given in Table 7.1.

Accessed by SWINBURNE UNIVERSITY OF TECHNOLOGY on 15 Aug 2007

@Seismicisolation

@Seismicisolation

SECTION 8 STRUCTURAL LAMINATED VENEER LUMBER

8.1 GENERAL

The provisions of this Section are appropriate for use with structural laminated veneer lumber (LVL) manufactured and having structural properties determined in accordance with AS/NZS 4357.

Generally, structural design with LVL is similar to that given for sawn timber and hence this Section includes only those aspects of design which are different from those given for sawn timber elsewhere in this Standard.

Structural design of taper cut LVL shall be performed in accordance with Appendix E.

All structural LVL manufactured in accordance with AS/NZS 4357 is Type A bonded.

8.2 DESIGN

The procedures given in Section 3 and Appendix E shall generally apply for design with structural LVL except that values of properties and factors given in this Section shall apply.

For on-flat bending and shear applications involving LVL containing cross bands, design shall be in accordance with the requirements for plywood in Section 5.

8.3 PROPERTIES

8.3.1 Characteristic strengths and elastic moduli

Characteristic strengths and elastic moduli determined in accordance with the requirements of AS/NZS 4357 for particular LVL products shall be obtained from the manufacturer.

Material properties for LVL shall not be assumed upon the basis of the strength group of the species of manufacture.

8.3.2 Modulus of rigidity

The modulus of rigidity for LVL shall be taken as one twentieth of the modulus of elasticity except where otherwise determined by testing.

8.3.3 Section properties

Structural LVL is usually manufactured with the grain of all veneers orientated in the longitudinal direction; however, in some instances special constructions may incorporate cross-band veneers. For LVL not containing cross-band veneers section properties shall be calculated using the actual cross-section dimensions.

For LVL containing cross-band veneers, the thickness of an individual ply may be assumed to be in proportion to its nominal thickness, as the finished minimum LVL thickness is to the total of the nominal veneer thicknesses. Section properties for cross-banded LVL shall be determined as follows:

(a) Any veneers with nominal grain direction at right angles to the direction of stress shall be ignored for the calculation of area, first moment of area and second moment of area when assessing the edgewise bending, tension and compressive capacity and edgewise flexural rigidity.

(b) For on flat bending and shear applications, section properties shall be determined in accordance with Paragraph J3 of Appendix J.

(c) The full sectional area may be assumed effective in resisting in-plane shear.

8.3.4 Capacity factors

The capacity factors to be used for the determination of design capacities for structural LVL elements shall be as given in Table 2.5.

Accessed by SWINBURNE UNIVERSITY OF TECHNOLOGY on 15 Aug 2007

@Seismicisolation

@Seismicisolation

8.4 MODIFICATION FACTORS

8.4.1 General

The modification factors for strength and stiffness given in Section 2 shall generally apply for design with LVL except for those factors specified in this Clause 8.4.

8.4.2 Duration of load

The modification factors for duration of load for strength, k_1 and stiffness j_2 and j_3, given in Clause 2.5.1 shall be used as appropriate.

8.4.3 Moisture condition

Where LVL is subjected to conditions, such that the average moisture content for a 12-month period will exceed 15 percent, the modification factors, k_4 for strength, and j_6 for stiffness, given in Table 8.1 shall be used except where different values have been determined by testing.

TABLE 8.1

MOISTURE CONTENT FACTORS FOR LVL

Property	Equilibrium moisture content (EMC)		
	≤ 15%	15% to 25%	≥ 25%
Bending and compression	$k_4 = 1.0$	$k_4 = 1.45 - 0.03$ EMC	$k_4 = 0.7$
Tension and shear	$k_4 = 1.0$	$k_4 = 1.30 - 0.02$ EMC	$k_4 = 0.8$
Modulus of elasticity	$j_6 = 1.0$	$j_6 = 1.30 - 0.02$ EMC	$j_6 = 0.8$

8.4.4 Temperature

The provisions of Clause 2.5.3 for seasoned timber shall be applied in a similar manner for structural LVL.

8.4.5 Length and position of bearing

The characteristic strength in bearing perpendicular to the grain for LVL may be modified by the appropriate value of k_7 given in Table 2.9 in accordance with the requirements of Clause 2.5.4.

8.4.6 Strength sharing between parallel members

The strength sharing factor, k_9, for LVL used in parallel systems shall be taken as unity, $k_9 = 1$.

8.4.7 Size factor

Unless demonstrated otherwise by in-grade testing, the size factor, k_{11}, for LVL shall be as given by the following:

(a) For bending, k_{11} shall be the lesser of $(300/d)^{0.167}$ or 1.

(b) For tension parallel to grain, k_{11} shall be the lesser of $(150/d)^{0.167}$ or 1.

(c) For shear, $k_{11} = 1.0$.

(d) For compression, $k_{11} = 1.0$.

(e) For tension perpendicular to grain, $k_{11} = (V_o/V)^{0.2}$ where $V_o = 10^7$ (a reference volume) and V is the volume in mm^3 of timber stressed above 80 percent of the maximum value in tension perpendicular to the grain.

NOTE: For built-up members the size factor is applied to the individual components; an example of this would be the tension flange of a box beam in which case the k_{11} value for tension members would be used on the cross-section of the tension flange only.

Accessed by SWINBURNE UNIVERSITY OF TECHNOLOGY on 15 Aug 2007

@Seismicisolation

@Seismicisolation

8.4.8 Stability factor

The procedures given in Section 3 for calculation of the stability factor, k_{12}, shall generally apply for design with LVL except that the material constant (ρ_b or ρ_c) for beams and columns shall be determined as follows:

For beams—

$$\rho_b = 14.71 \left(\frac{E}{f'_b}\right)^{-0.480} r^{-0.061} \qquad \ldots 8(1)$$

For columns—

A2

$$\rho_b = 11.39 \left(\frac{E}{f'_c}\right)^{-0.408} r^{-0.074} \qquad \ldots 8(2)$$

The maximum value of ρ_b or ρ_c used need not exceed the value computed for the case $r = 0.25$. In the case of beams where a temporary load causes a stress reversal, the value of ρ_b or ρ_c to be used is that corresponding to $r = 1.0$.

NOTES:

1 These equations are the same as those given for seasoned timber in Appendix E.

2 When a member is normally subjected to axial tension effect, but may act in compression due to temporary design loads such as wind loads, the material constant ρ may be calculated as for beams (Equation 8(1)) for the case of $r = 1.0$.

8.5 JOINT DESIGN

8.5.1 General

Design of joints using LVL shall be performed in accordance with the requirements of Section 4 except where otherwise specified in this Section.

8.5.2 Joint group

The joint group as provided by the manufacturer for a particular LVL product and determined in accordance with AS/NZS 4357 shall be taken to apply for nails, screws, bolts and coach screws only. For other fastener types, the use of the joint group may not be appropriate.

8.5.3 Characteristic fastener capacities

Characteristic capacities for nails, screws, bolts and coach screws shall be determined on the basis of joint group as tabulated in Section 4 or obtained from the manufacturer appropriate to the particular LVL product, fastener type and size, fastener location (face or edge of LVL) and orientation, and load orientation.

For other fastener types, characteristic capacities determined in accordance with AS/NZS 4357 for the particular LVL product, fastener type and dimensions, fastener location and orientation, and load orientation shall be obtained either from the manufacturer of the LVL or of the fastener.

Accessed by SWINBURNE UNIVERSITY OF TECHNOLOGY on 15 Aug 2007

@Seismicisolation

@Seismicisolation

APPENDIX B

GUIDELINES FOR SERVICEABILITY

(Informative)

B1 GENERAL

Except where absolute limits are required, it is generally best to deal with deflection design in terms of the individual loads being applied (e.g. it is usually preferable to deal with the effects of permanent loads separately from the deflection effects of transient or short-term loads). Unlikely load combinations need not be considered and total deflection usually needs to be considered only where absolute clearance limits must be maintained.

B2 SERVICEABILITY CONSIDERATIONS

Guidance for the design of members for serviceability is given in Table B1 for roof members, Table B2 for wall members and Table B3 for floor members or systems.

TABLE B1

GUIDELINES FOR SERVICEABILITY DESIGN

Criteria	Long-term effects	Short-term effects
TIMBER ROOF SYSTEMS AND MEMBERS		
Loads/ Actions	(a) Loads and load combinations $G + \psi_1 Q$ where values of ψ_1 and Q as per AS/NZS 1170.0	(a) Loads and load combinations (i) W_s (ii) $\psi_s Q$ Where W_s is as given in AS/NZS 1170.0 and Q and ψ_s are as given in AS/NZS 1170.0 (b) For non-trafficable roofs live load allowance for 'stacked materials used in repair and maintenance' should not be considered to act in combination with live loads for 'occasional loading on roof trusses or structure' (c) Other load combinations given in AS/NZS 1170.0 need be considered only where there are specific requirements, e.g. a need to maintain clearances (d) Where there is a possibility of ponding, loading should include an allowance for this
Appearance	Deformation limited according to occupancy Deflection limited relative to span and relative to proximity of reference lines (e.g. face brickwork) and available lines of sight End rotations need to be considered (see Note 1) Camber may be used to improve appearance (see Note 2)	Generally limits need only apply where deformation is visible and may cause alarm to occupants *Both wind and roof live loads are infrequent in occurrence and of short-term duration and this, together with the type of occupancy, should be taken into consideration in assessing acceptable deformation*
Functionality	Minimum slope for drainage should consider the effects of long-term deflection. Camber can also be used to offset the effect of long-term deflection (see Note 2)	Where ponding is possible, the additional short-term deflection due to this load should be considered and slope and/or camber increased to ameliorate this. (See Notes 2 and 3)

(*continued*)

Accessed by SWINBURNE UNIVERSITY OF TECHNOLOGY on 15 Aug 2007

@Seismicisolation

@Seismicisolation

TABLE B1 (*continued*)

Criteria	Long-term effects	Short-term effects
Damage	Cracking/damage to roof cladding Cracking/damage to ceilings Cracking of glazing (e.g. clerestory windows) due to 'in-plane' movements Excessive end rotations may result in unintended load transfer and damage to other building elements including damage to supporting connections (see Note 1) Damage to partitions—unintended load transfer to partitions caused by excessive deformations, may result in damage. To avoid this, an upper bound estimate of deflection may need to be calculated and appropriate clearances specified for construction (see Note 3) 'In-plane' racking of roofs may distort or damage roof claddings and/or ceiling linings *In evaluating the tendency for cracking or damage under long-term loading, considerations should be given to the sequence of construction and the creep deformation characteristics of the materials involved*	Cracking/damage to roof cladding Cracking/damage to ceilings Cracking of glazing (e.g. clerestory windows) due to 'in-plane' movements Damage to partitions —unintended load transfer to partitions caused by excessive deformations, may cause damage. To avoid this, an upper bound estimate of deflection may need to be calculated and appropriate clearances specified for construction (see Note 3) 'In-plane' racking of roofs may distort or damage roof claddings and/or ceiling linings *Some damage or distortion of materials may be acceptable under extreme event loads*
WALL SYSTEMS AND MEMBERS		
Loads/ Actions	(a) Loads and load combinations $G + \psi_1 Q$ where values of G, ψ_1 and Q are as given in AS/NZS 1170.0 except, for floor live loads for houses, take ψ_1=0.33 (b) Other considerations Effects of differential settlement. Effects of loads applied eccentric to the axies of columns or studs. Loads arising from deflections of other elements, e.g. deflection of a ridge beam causing lateral thrust on walls	(a) Loads and combinations (i) W_s (ii) $\psi_s Q$ (iii) $G + \psi_s Q$ where W_s is as given in AS/NZS 1170.0, and Q and ψ_s are as given in AS/NZS 1170.0. Q may include combinations of floor and roof loads. For houses where load is from one floor only, take ψ_s=1.0 Load combination (iii) usually needs to be considered only where clearance must be maintained (b) Other considerations Effects of loads applied eccentric to the axes of columns or studs
Appearance	Sway or lean of walls or columns and deflection relative to supports or relative to rigid cross walls limited according to occupancy Unresolved thrusts from the roof structure and/or moment transfer from roof or floor elements to columns, may cause sway, bending deformation or rotation of wall elements, e.g. excessive deflection of ridge beams (see Note 2) Limits on vertical deflections of lintels should include consideration of their floor and/or roof supporting functions	Sway or lean of walls or columns and deflection relative to supports or relative to rigid cross walls limited according to occupancy Unresolved thrusts from the roof structure and/or moment transfer from roof or floor elements to columns, may cause sway or lean or deformation (e.g. rotation) of wall elements Limits on vertical deflections of lintels should include consideration of their floor and/or roof supporting function Excessive lateral movement of wall members, including lintels, may cause alarm to occupants

(*continued*)

Accessed by SWINBURNE UNIVERSITY OF TECHNOLOGY on 15 Aug 2007

@Seismicisolation

@Seismicisolation

TABLE B1 (*continued*)

Criteria	Long-term effects	Short-term effects
Functionality	Differential deflections resulting in gaps at wall junctions can lead to leakage of air, light, sound, water, etc. Excessive lateral deformations may result in unintended load transfer to adjacent buildings and/or encroachment on title boundaries (see Note 4)	Differential deflections resulting in gaps at wall junctions can lead to leakage of air, light, sound, water, etc. Sway or horizontal movement under short-term loads may shake, rattle or cause dislodgment of fittings or furnishings attached to, or adjacent to walls Excessive sway or horizontal movement may result in closely spaced but otherwise structurally independent buildings transferring load to, or impacting upon, adjacent buildings and/or encroachment on title boundaries (see Note 4)
Damage	Cracking of linings, claddings or glazing, due to excessive deformation both 'in-plane' and 'out of plane'. (With many materials, e.g. unreinforced masonry or glass, tolerance to 'in-plane' deformation is significantly less than tolerance to 'out of plane' deformations) Excessive vertical deflection of lintels may result in load transfer to joinery items and consequent damage. An upper bound estimate of deflection should be calculated and appropriate clearance specified for construction (see Note 3) Excessive sway or horizontal deflection may cause damage to adjacent buildings	Cracking of linings, claddings or glazing, due to excessive deformation both 'in plane' and 'out of plane'. (With many materials, e.g. unreinforced masonry or glass, tolerance to 'in plane' deformation is significantly less than tolerance to 'out of plane' deformations) Excessive vertical deflection of lintels may result in load transfer to joinery items and consequent damage. An upper bound estimate of deflection should be calculated and appropriate clearance specified for construction (see Note 3) Excessive sway or horizontal deflection may cause damage to adjacent buildings
TIMBER FLOOR SYSTEMS AND MEMBERS		
Loads/ Actions	(a) Loads and load combinations $G + \psi_1 Q$ where values of ψ_1 and Q are as specified in AS/NZS 1170.0, except for housing, take, ψ_1=0.33	(a) Loads and load combinations (i) $\psi_s Q$ Values of ψ_s and Q as given in AS/NZS 1170.0 except that for housing, take, ψ_s=1.0 (ii) $G + \psi_s Q$ Values of Q and ψ_s are as given in AS/NZS 1170.0. This combination is normally considered only where clearance is a consideration
Appearance	Deflection limited according to occupancy and expectation Deflection limited relative to span and relative to proximity to reference lines (e.g. face brickwork) and dependent upon available lines of sight Consider the relative deformation of joists parallel and close to relatively rigid walls (either above or below the floor). Resultant localized differential deflection can cause high/narrow furniture to lean noticeably (see Note 5) Excessive end rotations can cause furniture to lean noticeably *Camber may be used to improve the appearance (see Note 2)*	Function or amenity may be adversely affected by unsatisfactory dynamic behaviour, and excessive deflections, or slope resulting in shaking, rattling, horizontal movement of furniture, etc. *The dynamic response of floor systems including frequency of vibration should be considered. For lightly loaded floors in particular, the application of static live load deflection limits does not necessarily ensure satisfactory dynamic performance* Differential deflection of longer span joists in close proximity to relatively rigid parallel walls or excessive rotations can result in excessive visible vibration or horizontal movements of furniture

(*continued*)

Accessed by SWINBURNE UNIVERSITY OF TECHNOLOGY on 15 Aug 2007

@Seismicisolation

@Seismicisolation

TABLE B1 (*continued*)

Criteria	Long-term effects	Short-term effects
Functionality	Excessive floor slope may adversely affect occupancy requirements	Function or amenity may be adversely affected by unsatisfactory dynamic behaviour, and excessive deflections, or slope resulting in shaking, rattling, horizontal movement of furniture, etc.
	Differential deformations resulting from concentrated loads may cause localized depressions in the floor	*The dynamic response of floor systems including frequency of vibration should be considered. For lightly loaded floors in particular, the application of static live load deflection limits does not necessarily ensure satisfactory dynamic performance*
Damage	Cracking/damage to ceilings and linings	Cracking/damage to ceilings and linings. In particular the differential deformation of joists running parallel and in close proximity to supports or relatively rigid walls may result in localized damage
	Differential deformation of longer span floor joists in close proximity to relatively rigid walls either above or below the floor	
	Differential deformations resulting from concentrated loads may cause localized depressions in the floor, resulting in damage to roofs, partitions and floors above and partitions and floors below	Differential deformations resulting from concentrated loads may cause localized depressions in the floor, resulting in damage to roofs, partitions and floors above and partitions and floors below The ability of the ceiling materials to resist cracking as a consequence of deformations needs to be considered in respect of the duration of load and appropriate limits applied
	Damage to partitions—unintended load transfer to partitions caused by excessive deformations, may cause damage. To avoid this, an upper bound estimate of deflection may need to be calculated and appropriate clearances specified for construction (see Note 3) *In evaluating the tendency for cracking or damage under long-term loading, considerations should be given to the sequence of construction and the creep deformation characteristics of the materials involved*	Damage to partitions—unintended load transfer to partitions caused by excessive deformations, may cause damage. To avoid this, an upper bound estimate of deflection may need to be calculated and appropriate clearances specified for construction (see Note 3)

NOTES:

1 Deformation includes both deflection and rotation. For a simply supported uniformly loaded beam a deflection of span / 300 corresponds to an end rotation of 0.01 radians. For a 500 mm deep beam this corresponds to 5 mm relative horizontal displacement at the ends which could be significant in respect of appearance, function or damage.

2 Camber may be used in certain circumstances, to reduce the visual effects of deflection or to prevent ponding. However, camber does not reduce the actual amount of deflection due to load effects and its use in design to allow for larger deflections (or smaller sizes) may lead to other undesirable effects, such as larger than acceptable end rotations or significant mis-alignment of other building elements. The inappropriate use of camber to facilitate larger than normal deflections can also result in construction complexities.

3 Where clearances between building elements must be maintained (e.g. where undesirable load paths could lead to damage or loss of function, such as doors or windows jamming or being damaged) then it is recommended that an upper bound estimate of deflection be calculated and an appropriate clearance specified. An upper bound estimate of deflection may be obtained using a lower fifth percentile estimate of modulus of elasticity rather than the average values given elsewhere in this Standard. In the absence of more precise information a rough estimate of the lower fifth percentile values of modulus of elasticity may be calculated as a proportion of the average modulus of elasticity, as follows:

Accessed by SWINBURNE UNIVERSITY OF TECHNOLOGY on 15 Aug 2007

@Seismicisolation

@Seismicisolation

(a) For F-grades of timber graded in accordance with AS 2082, AS 2858 ..... $E_{0.05} \approx 0.5\ E_{average}$

(b) For MGP grades and F-grades of timber graded in accordance with AS 1748 ..... $E_{0.05} \approx 0.7\ E_{average}$

(c) For F-grades of plywood to AS/NZS 2269, GL grades for glulam to AS/NZS 1328 ..... $E_{0.05} \approx 0.75\ E_{average}$

(d) For LVL to AS/NZS 4357 ..... $E_{0.05} \approx 0.85\ E_{average}$

(e) For A17 grade of timber graded in accordance with AS 2082 ..... $E_{0.05} \approx 0.7\ E_{average}$

4 Interaction with adjacent buildings may be a legal issue.

5 Relative deflection is deflection relative to span and relative to reference lines.

6 Further information may be found in the following documents:

(a) KING, A.B., Serviceability Limit State Criteria for New Zealand Buildings. *Building Technology Ltd*.

(b) ISO 4356 Bases for the design of structures—Deformations of buildings at the serviceability limit states.

Accessed by SWINBURNE UNIVERSITY OF TECHNOLOGY on 15 Aug 2007

@Seismicisolation

@Seismicisolation

APPENDIX C

JOINTS IN TIMBER STRUCTURES

(Normative)

C1 GENERAL

This Appendix sets out design methods for the use of nail and screw fasteners in plywood, a method for calculating deformation of joints under load and equations and tables for characteristic capacity for bolts.

C2 FASTENERS FOR PLYWOOD

C2.1 General

Requirements for the use of nail and screw fasteners to join plywood to solid timber are set out in Paragraph C2.2.

C2.2 Strength of joints with plywood

C2.2.1 *Joint strength grouping*

The grouping of common timber species for joint design is given in Tables 2.1 and 2.2.

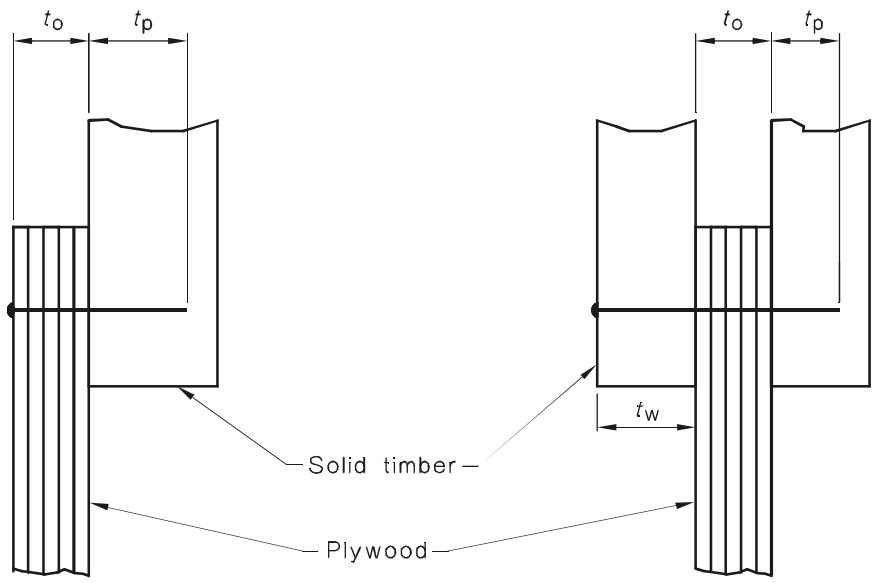

FIGURE C1 PLYWOOD THICKNESS AND NAIL LENGTH

C2.2.2 *Design capacity for laterally loaded nails and screws in plywood*

The design capacity load for a laterally loaded plywood-to-timber joint fastened with nails or screws may be taken as 10 percent greater than the values given for timber-to-timber joints in Section 4 except that fastener diameter and length and plywood thickness (see Figure C1) shall be such that—

$t_o / D > 1.5$

$t_p / D > 10$

$t_w / D > 10$

Accessed by SWINBURNE UNIVERSITY OF TECHNOLOGY on 15 Aug 2007

@Seismicisolation

@Seismicisolation

where

D = nail diameter, in millimetres

t_o = thickness of plywood as indicated in Figure C1, in millimetres

t_p = penetration of nail as indicated in Figure C1, in millimetres

t_w = thickness of solid timber as indicated in Figure C1, in millimetres.

For values of $(t_o/D) < 1.5$, the design capacity of the joint shall be reduced linearly with respect to (t_o/D) so as to reach zero when $(t_o/D) = 0$. For values of t_p/D and t_w/D less than 10, the design capacity of the joint shall also be reduced linearly with respect to t_p/D and t_w/D but in addition the fastener shall be considered as non-load-bearing if either t_p/D or t_w/D is less than 5. These requirements shall apply whether the fastener is in single or double shear.

In the case of shear joints, such as occurs in the nailing of plywood webs to the solid timber flanges of box beams, the multiple nail factor $k_{17} = 1.0$ shall be used in Equation 4.2.

C3 DEFORMATION OF JOINTS

C3.1 General

The load-displacement characteristics of a joint are highly nonlinear. However, where a linear joint stiffness is required for design purposes, a secant stiffness may be used. A suitable definition of the secant stiffness (K_{sec}) is given by—

$$K_{sec} = Q^*/\Delta_o \qquad \text{. . . C1}$$

where Δ_o is the deformation of the joint (including long duration effects) when the design action effect Q^* is applied.

In Paragraphs C3.2 and C3.3, the equations of deformation are good estimates for the deformation due to the first application of a load; for repeated loads, due allowance should be made for incremental slip and changes in joint stiffness.

Where both a long duration design action effect Q_D^* and a short duration design action effect Q_D^* act on a fastener, then non-linear load-deformation characteristics should be considered in evaluating the maximum deformation. In the absence of further information, the maximum deformation may be taken to be equal to the long duration deformation due to Q_D^* minus the short duration deformation due to Q_D^* plus the short duration deformation due to design action effect $Q_D^* + Q_L^*$.

C3.2 Displacement of nailed and screwed joints in solid timber

The displacement of nailed or screwed joints in single shear for solid-wood to solid-wood joints may be estimated as follows:

(a) For displacements $\Delta < 0.5$ mm—

$$\Delta = \left(\frac{44\ j_{12}}{D^{3.5}}\right)\left(\frac{Q^*}{h_{32}}\right)^2 \qquad \text{. . . C2}$$

where

Δ = joint displacement, in millimetres

D = diameter of nail or screw, in millimetres

j_{12} = duration factor given in Table C2

Q^* = applied design action effect per nail or screw in newtons

h_{32} = stiffness factor given in Table C1

@Seismicisolation

Accessed by SWINBURNE UNIVERSITY OF TECHNOLOGY on 15 Aug 2007

@Seismicisolation

(b) For a displacement of $\Delta = 2.5$ mm—

$$Q^* = 0.165\, D^{1.75}\, j_{13}\, h_{32} \qquad \text{. . . C3}$$

where the duration factor j_{13} is given in Table C2.

(c) For a displacement 0.5 mm < Δ < 2.5 mm the corresponding applied load effect Q^* should be obtained by linear interpolation between the values to give $\Delta = 0.5$ mm and $\Delta = 2.5$ mm.

NOTES:

1 The displacement $\Delta = 2.5$ mm usually occurs for applied loads above the allowable design load; however, this value is included for interpolation purposes for 0.5 mm < Δ < 2.5 mm.

2 For the case of metal and plywood side plates, Equations C2 and C3 lead to conservative over-estimates of fastener slip.

3 In the above equations Q^* refers to the actual applied load effect, and does not necessarily refer to maximum design load effect.

C3.3 Displacement of solid timber joints fabricated with bolts, split-rings and shear plates

C3.3.1 *General*

Where relevant specific test information is not available, the following Paragraphs C3.3.2 and C3.3.3 may be used to estimate the displacement of joints fabricated with bolts, split-ring fasteners and shear-plate fasteners.

C3.3.2 *For loads acting parallel to the grain*

For loads acting parallel to the grain, the displacement Δ may be taken to be given by—

$$\Delta = \Delta_i + \left(\frac{j_{14}}{h_{33}}\right)\left(\frac{Q^*}{Q_k}\right) \qquad \text{. . . C4}$$

where

Δ = total displacement, millimetres

Δ_i = initial displacement due to oversize holes, millimetres

= 0, for a load superimposed on an existing load, otherwise

$= \dfrac{1}{\sqrt{n_{con}}}$ for bolted joints

$= \dfrac{1}{2\sqrt{n_{con}}}$ for split-ring fasteners or shear-plate fasteners

n_{con} = number of bolts or split ring or shear-plate fastener sets in the joint

j_{14} = duration factor given in Table C3

h_{33} = stiffness factor given in Table C4

Q^* = design action effect per fastener, in newtons

Q_k = characteristic strength of a fastener as defined in Section 4, in newtons.

Equation C4 is a good approximation for serviceability load effects.

NOTES:

1 The displacement Δ= 2.5 mm usually occurs for applied loads above the allowable design load; however, this value is included for interpolation purposes for 0.5 mm < Δ <2.5 mm.

2 For the case of metal and plywood side plates, Equations C2 and C3 lead to conservative over-estimates of fastener slip.

3 In the above equations Q^* refers to the actual applied load effect, and does not necessarily refer to maximum design action effect.

Accessed by SWINBURNE UNIVERSITY OF TECHNOLOGY on 15 Aug 2007

@Seismicisolation

@Seismicisolation

C3.3.3 *For loadings acting perpendicular to the grain*

For this case the displacement Δ may be taken to be given by—

$$\Delta = \Delta_i + \left(\frac{j_{14}}{h_{33}\,h_{35}}\right)\left(\frac{Q^*}{Q_k}\right) \qquad \ldots \text{C5}$$

where

Δ_i = initial displacement due to oversize holes, millimetres

= 0, for a load superimposed on an existing load, otherwise

= $\dfrac{1}{\sqrt{n_{con}}}$ for bolted joints

= $\dfrac{1}{2\sqrt{n_{con}}}$ for split-ring fasteners or shear-plate fasteners

j_{14} = duration factor given in Table C3

h_{33} = stiffness factor given in Table C4

h_{35} = 1.5 for bolted joints of Types 1, 2 and 3 as defined in Table 4.10

= 2.5 for bolted joints of Type 4 as defined in Table 4.10

= 1.0 for split-ring and shear-plate fasteners

Q^* = design action effect per fastener in newtons

Q_k = characteristic load capacity per fastener as defined in Section 4, in newtons.

Equation C5 is a good approximation for serviceability load effects.

NOTE: In the above equations Q^* refers to the actual applied load effect, and does not necessarily refer to maximum design load effect.

TABLE C1

STIFFNESS FACTOR h_{32} FOR NAILED AND SCREWED JOINTS IN SOLID TIMBER

Initial moisture condition	Species joint group	Factor h_{32}
Unseasoned	J1	1450
	J2	1050
	J3	750
	J4	550
	J5	410
	J6	300
Seasoned	JD2	1600
	JD3	1250
	JD4	990
	JD5	750
	JD6	590
	JD6	470

Accessed by SWINBURNE UNIVERSITY OF TECHNOLOGY on 15 Aug 2007

@Seismicisolation

@Seismicisolation

TABLE C2

DURATION FACTORS j_{12} AND j_{13}

Initial moisture condition	Duration of load	Factor j_{12}	Factor j_{13}
Unseasoned	More than 3 years	9	0.5
	5 months	4	0.7
	Less than 2 weeks	1	1
Seasoned	More than 3 years	4	0.5
	Less than 2 years	1	1

NOTE: If required, intermediate values of j_{12} and j_{13} may be obtained by linear interpolation with log-time.

TABLE C3

DURATION FACTOR j_{14}

Initial moisture condition	Duration of load	Factor j_{14}
Unseasoned	More than 3 years	4
	5 months	2
	2 weeks	1.5
	Less than 5 minutes	1
Seasoned	More than 3 years	3
	5 months	2
	2 weeks	1.5
	Less than 5 minutes	1

NOTE: Intermediate values of j_{14} may be obtained by linear interpolation with log-time.

TABLE C4

STIFFNESS FACTOR h_{33}

Initial moisture condition	Factor		
	Bolted joints		Split rings and shear plates
	Without metal side plates	With metal side plates	
Unseasoned	0.60	0.90	0.35
Seasoned	0.75	1.15	0.45

C4 EQUATIONS AND TABLES FOR CHARACTERISTIC CAPACITIES FOR BOLTS

C4.1 Load Q_{kl}

The characteristic capacity, Q_{kl}, for a single bolt bearing parallel to the grain and acting in single shear shall be the lesser of—

$t\, f'_{cj}\, D/2$

$1.65\, f'_{cj}\, D^2$ in timber of groups J1 and JD1

$1.75\, f'_{cj}\, D^2$ in timber of groups J2 and JD2

$2.0\, f'_{cj}\, D^2$ in timber of groups J3, J4, JD3 and JD4

$2.2\, f'_{cj}\, D^2$ in timber in groups J5 and JD5

$2.4\, f'_{cj}\, D^2$ in timber of groups J6 and JD6

where

@Seismicisolation

Accessed by SWINBURNE UNIVERSITY OF TECHNOLOGY on 15 Aug 2007

@Seismicisolation

D = bolt diameter, in mm

t = effective timber thickness as defined in Clause 4.5.2.2

f'_{cj} = appropriate characteristic strength value for the species group and seasoning condition as given in Table C5.

Characteristic capacities computed in accordance with these equations are given in Tables 4.9(B) and 4.9(C).

C4.2 Load Q_{kp}

The characteristic capacity, Q_{kp}, for a single bolt bearing perpendicular to the grain and acting in single shear shall not exceed the lesser of—

$t\, f'_{pj}\, D/2$

$10\, f'_{pj} \sqrt{D^3}$ in timber of groups J1 and JD1

$12\, f'_{pj} \sqrt{D^3}$ in timber of groups J2 and JD2

$15\, f'_{pj} \sqrt{D^3}$ in timber of groups J3 and JD3

$17\, f'_{pj} \sqrt{D^3}$ in timber of groups J4 and JD4

$19\, f'_{pj} \sqrt{D^3}$ in timber of groups J5 and JD5

$22\, f'_{pj} \sqrt{D^3}$ in timber of groups J6 and JD6

where

D = bolt diameter, in mm

t = effective timber thickness as defined in Clause 4.5.2.3

f'_{pj} = appropriate characteristic strength value for the species group and seasoning as given in Table C6.

Characteristic capacities computed in accordance with the foregoing expressions are given in Tables 4.10(B) and 4.10(C).

TABLE C5

VALUES OF f'_{cj} FOR BOLTED JOINTS

Joint group	J1	J2	J3	J4	J5	J6
f'_{cj} **MPa**	55.5	44.0	35.5	28.0	22.0	18.0
Joint group	JD1	JD2	JD3	JD4	JD5	JD6
f'_{cj} **MPa**	69.0	55.5	44.0	35.5	28.0	22.0

TABLE C6

VALUES OF f'_{pj} FOR BOLTED JOINTS

Joint group	J1	J2	J3	J4	J5	J6
f'_{pj} **MPa**	22.0	17.5	11.0	7.1	4.7	2.4
Joint group	JD1	JD2	JD3	JD4	JD5	JD6
f'_{pj} **MPa**	29.5	22.5	17.0	12.5	9.0	6.1

Accessed by SWINBURNE UNIVERSITY OF TECHNOLOGY on 15 Aug 2007

@Seismicisolation

@Seismicisolation

APPENDIX F

NOTATION AND FACTORS

(Normative)

This Appendix sets out the notation used in this Standard, lists the modification factors for stiffness (*j*) (see Table F1) and for strength (*k*) (see Table F2). Figure F1 illustrates examples of dimensional symbols used.

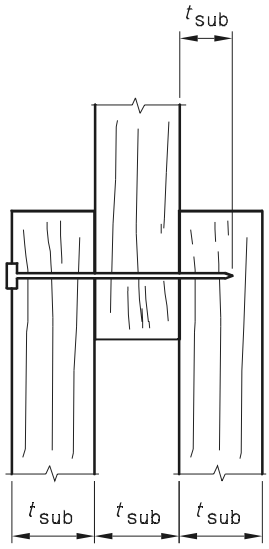

(a) Nailed joints

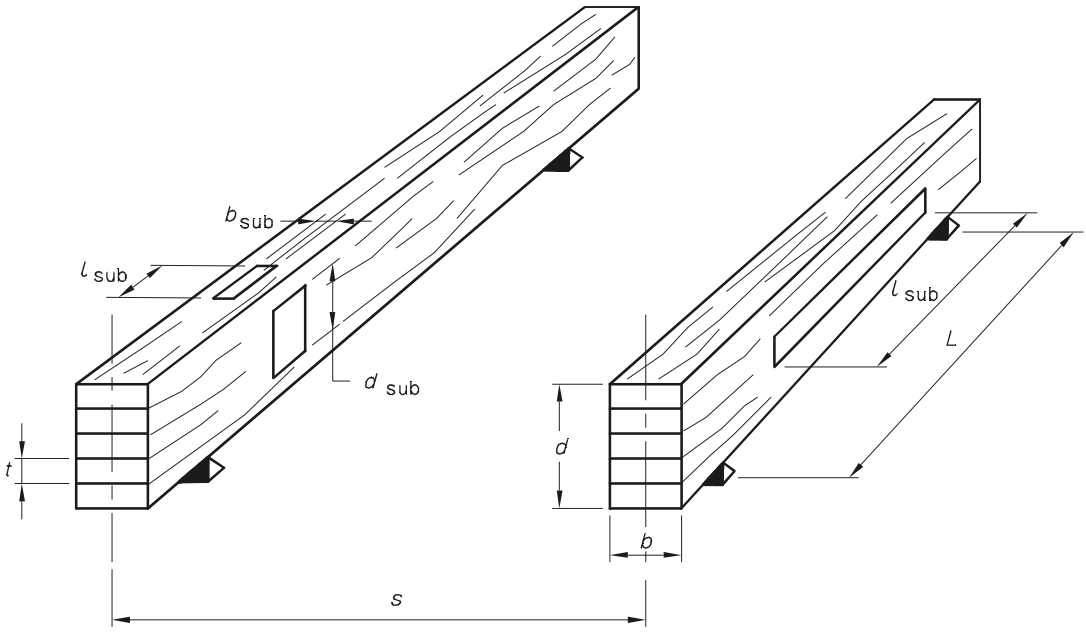

(b) Floor joints

FIGURE F1 ILLUSTRATIVE EXAMPLES OF DIMENSIONAL SYMBOLS USED

Accessed by SWINBURNE UNIVERSITY OF TECHNOLOGY on 15 Aug 2007

@Seismicisolation

@Seismicisolation

Quantity symbols used in this Standard are listed below.

A	=	area of net cross-section
A_{ap}	=	cross-sectional area at the critical section of curved tapered beam (Paragraph E13.2, Table E10)
A_c	=	cross-sectional area of column (Clauses 3.3.1.1 and 6.3.3)
A_ℓ	=	bearing area for loading parallel to grain (Clause 3.2.6.2)
A_p	=	bearing area for loading perpendicular to grain
	=	bearing area for plywood (Clause 5.4.4)
A_s	=	shear plane area (Clauses 3.2.5, 5.4.3 and 5.5.3)
A_{sj}	=	transverse shear plane area at joint section (Clauses 4.4.6 and 5.6.2)
A_t	=	net cross-sectional area of tension member (Clauses 3.4.1 and 5.5.4)
A_{tp}	=	member width by effective length stressed in tension for tension perpendicular to grain (Clause 3.5)
A_w	=	effective area of washer for bearing (Clauses 4.4.3.3, 4.5.3.2 and Table 4.12)
$A1$, $A2$	=	areas of veneers of plywood (Paragraph J3.3.1)
a	=	general dimension
a_1, a_2, a_3, a_4	=	spacings, edge and end distances (Figure 4.12)
b	=	breadth or horizontal dimension of the member (Figure F1)
b_{eff}	=	effective thickness (breadth) of member in joint assembly (Tables 4.9 and 4.10)
COV	=	coefficient of variation
D	=	diameter of a metal fastener (Section 4)
d	=	depth or vertical dimension of the member (Figure F1)
d_{ap}	=	depth of tapered beam at the deepest section usually at the apex (Figure E9)
d_n	=	net depth of notched beam (Paragraph E9 and Figure E8)
d_{notch}	=	notch depth (Figure E8)
d_p	=	mid-length diameter of a pole (Clause 6.3, Table 6.2)
d_s	=	distance from loaded edge (Clause 4.4.6, Figure 4.11;
		or
	=	depth of tapered beam at the smallest end (Paragraph E12, Figure E9)
d_w	=	depth of web of I-beam or box beam (Figure J3)
d_1, d_2, d_3	=	thickness of veneers of plywood (Figures J4 and J5)
E	=	modulus of elasticity (Tables 2.4, 5.1, 7.1, H1, Paragraph E2 and E7.5)
EA	=	effective axial rigidity (Paragraph E3.1)
$E_B I_B$	=	flexural rigidity of a single beam (Paragraph E8.2)
$E_C I_C$	=	flexural rigidity of a single crossing member (Paragraph E8.2)

Accessed by SWINBURNE UNIVERSITY OF TECHNOLOGY on 15 Aug 2007

@Seismicisolation

@Seismicisolation

$(EI)_x$	=	rigidity in bending about the major axis, i.e. x-axis in Figure 3.1, (Paragraphs E3.2 and E6)
$(EI)_y$	=	rigidity in bending about the minor axis, i.e. y-axis in Figure 3.1, (Paragraphs E3.2 and E6)
EMC	=	equilibrium moisture content
f'_b	=	characteristic strength in bending, in megapascals (Tables 2.4, 5.1, 7.1, H1 and Clause 3.2.1.1)
f'_c	=	characteristic strength in compression parallel to grain or plywood panel (Table 2.4 and Clause 3.3.1)
f'_{cj}	=	characteristic strength value for bolts in bearing parallel to the grain (Paragraph C4.1)
f'_ℓ	=	characteristic strength in bearing parallel to grain (Table 2.3 and Clause 3.2.6.2)
f'_o	=	characteristic strength of material (Clause 2.1.2)
f'_p	=	characteristic strength in bearing perpendicular to grain (Table 2.3, Clause 3.2.6.1 and Paragraph E12.5); or
	=	for plywood, characteristic strength in compression normal to the plane of the plywood panel (Clause 5.4.4)
f'_{pj}	=	characteristic strength for bearing perpendicular to grain (Paragraph C4.2)
f'_s	=	characteristic strength in shear parallel to grain (Table 2.4, and Clause 3.2.5); or
	=	for plywood, characteristic strength in panel shear (in-plane shear) (Clause 5.3.5)
f'_{sj}	=	characteristic strength in shear at joint details appropriate to species strength group (Clause 4.4.6, Table 2.3 and Paragraph E9)
f'_t	=	characteristic strength in tension parallel to grain (Table 2.4, Clause 3.4.1)
f'_{tp}	=	characteristic strength in tension perpendicular to the grain (Table 2.3, Clause 3.5 and Paragraph E12.5)
$[f'_b Z]$	=	characteristic capacity in bending
$[f'_t A_t]$	=	characteristic capacity of a member in tension
G	=	dead load (Tables B1 and G1) (see also AS/NZS 1170.0)
	=	modulus of rigidity (Tables 2.4, 5.1, 7.1 and H1)
(GJ)	=	torsional rigidity (Paragraphs E3.2 and E6)
g_{13}	=	modification factor for effective length of columns (Clause 3.3.2.2)
g_{19}	=	modification factor for plywood assembly (Clause 5.4.4)
g_{28}	=	modification factor for effective length of spaced columns (Paragraph E4, Table E5)
g_{31}, g_{32}	=	geometric factors for calculating k_9 (Table 2.11)
g_{38}	=	modification factor for buckling restraints (Paragraph E7.2)
g_{40}	=	modification factor for notched beams (Paragraph E9)
g_{41}, g_{42}	=	modification factors for concentrated loads on grid systems (Paragraph E8)

Accessed by SWINBURNE UNIVERSITY OF TECHNOLOGY on 15 Aug 2007

@Seismicisolation

@Seismicisolation

g_{43} = modification factor for partial area load on a grid system (Paragraph E8)

g_{60} = slenderness coefficient for plywood diaphragms (Paragraph J2.2)

g_{61} = slenderness coefficient for plywood diaphragms (Paragraph J2.3)

g_{62} = modification factor for effective buckling width of plywood for concentrated loads (Paragraph J2.4.2)

h_1 = moment factors (Paragraph E6.2.2)

h_2 = moment factor of bisymmetrical beams (Paragraph E6.3)

h_3 = moment factor of bisymmetrical beams (Paragraph E6.3)

h_{26} = stiffness factor for buckling for loading duration (Paragraph E7.2)

h_{27} = stiffness factor of buckling for materials type (Paragraph E7.2)

h_{32} = stiffness factor given in Table C1 (Paragraph C3.2)

h_{33} = stiffness factor given in Table C4 (Paragraph C3.3.2)

h_{35} = stiffness factor (Paragraph C3.3.3)

h_B, h_C = $E_B I_B/L^3$, $E_C I_C/s^3$ (Paragraph E8.2)

I = second moment of area (moment of inertia) (Paragraph E4.4.1)

I_p = second moment of area of parallel plies whose grain direction is parallel to the span (Clause 5.4.2)

J = St Venant torsion constant (see Note to Paragraph E6.2.2)

j = stiffness modification factors (Table F1)

K_A, K_B = stiffness coefficients (Paragraph E7)

K_{sec} = secant modulus of a joint (Paragraph C3.1)

k_{mod} = product of the relevant modification factors (Clause 2.1 and Table F2)

L = length of column or span of beam

$L_{a\phi}$ = distance between points of effectively rigid rotational restraints (Clause 3.2.3.2, Paragraphs E3.2 and E6.4)

L_{ax} = distance between points of effectively rigid restraints against lateral movement in the direction of the y-axis (Clause 3.3.2.2)

L_{ay} = distance between points of effectively rigid restraints against lateral movement in the direction of the x-axis (Clause 3.2.3.2, Paragraphs E4.3.1, E6.2.2 and E6.3)

L_s = centre-to-centre distance of packing pieces (Figure E2, Paragraph E4.3)

l_b = bearing length of range of I-beam or box beam (Figure J3)

L_{ch} = characteristic length in buckling of plywood webs (Paragraph J2.2.1)

l_{eff} = effective compression width (Figure J3)

l_{notch} = notch length (Figure E8)

l_p = depth of nail or screw penetration into primary member (Figure 4.4(a), Clauses 4.2.3.4 and 4.5.3.2)

l_{par} = end distance (Clause 4.4.4.2, Figure 4.10)

Accessed by SWINBURNE UNIVERSITY OF TECHNOLOGY on 15 Aug 2007

@Seismicisolation

@Seismicisolation

M^*	=	design action effect in bending produced by strength limit states design loads about the axis of bending (Clauses 3.2, 3.6.2, 4.2.3.3, Paragraphs E9, E10, E12 and E13)
(ϕM)	=	design capacity of a member in bending (Clauses 3.2, 3.6.2 and 6.3.1, Paragraphs E12 and E13)
M_a^*	=	design action effect produced by strength limit states design loads as an applied moment (Paragraphs E7.4 and E7.5)
M_{bat}^*	=	longitudinal moment on batten (Paragraph E4.3.3)
M_{cr}	=	critical elastic buckling moment (Paragraph E6)
MGP	=	a stress grade (Appendix H)
M_i^*	=	design action effect in bending produced by strength limit states design loads acting in the plane of the plywood (Figure 5.2, Clause 5.5.2)
(ϕM_i)	=	design capacity in bending of plywood (Clause 5.5.2)
(ϕM_j)	=	design capacity for joints under bending (Clauses 4.2.3.3, 4.3.3.3)
M_p^*	=	design action effect in bending produced by strength limit states design loads acting normal to the plane of the plywood (flatwise bending) (Clause 5.4.2)
(ϕM_p)	=	design capacity in bending of plywood (Clause 5.4.2)
M_x	=	bending moment, about x-axis
M_x^*	=	design action effect in bending about a beam's major principal x-axis, produced by strength limit states design loads (Clauses 3.2.1.2, 3.6.1 and Paragraph E5)
(ϕM_x)	=	design capacity in bending about a beam's major principal x-axis (Clauses 3.2.1.2, 3.6.1, 3.6.2 and Paragraph E5)
M_y	=	bending moment, about y-axis
M_y^*	=	design action effect in bending about a beam's minor principal y-axis, produced by strength limit states design loads (Clause 3.2.1.2 and Paragraph E5)
(ϕM_y)	=	design capacity in bending about a beam's minor principal y-axis (Clause 3.2.1.2 and Paragraph E5)
m	=	number of members supported by each restraint system (Paragraph E7.2)
N^*	=	design action effect produced by strength limit state design loads (Clause 6.3.3, Paragraph E10 and Section 4)
N_c^*	=	design action effect produced by strength limit states design loads acting in compression (Clauses 3.3.1.1, 3.6.1, 5.5.5, Paragraphs E5, E7.3)
(ϕN_c)	=	design capacity of a member in compression (Clauses 3.3.1.1, 5.5.5, 6.3.3)
N_{cr}	=	critical elastic buckling load (Paragraph E3.1)
(ϕN_{cx})	=	design capacity in compression for buckling about the major x-axis (Clause 3.3.1.2 and Paragraph E5)
(ϕN_{cy})	=	design capacity in compression for buckling about the minor y-axis (Clause 3.3.1.2 and Paragraph E5)
(ϕN_j)	=	design capacity for joints under direct load (Section 4)

Accessed by SWINBURNE UNIVERSITY OF TECHNOLOGY on 15 Aug 2007

@Seismicisolation

@Seismicisolation

N_{ℓ}^{*} = design action effect produced by strength limit states design loads acting in bearing parallel to the grain (Clause 3.2.6.2)

(ϕN_{ℓ}) = design capacity in bearing parallel to grain (Clause 3.2.6.2)

N_{p}^{*} = design action effect in bearing produced by strength limit states design loads acting normal to the plane of the plywood (Figure 5.1, Clause 5.4.4)

(ϕN_{p}) = design capacity in bearing perpendicular to grain (Clauses 3.2.6.1, 5.4.4)

N_{R}^{*} = force generated in a restraint under a displacement (Paragraph E7)

N_{t}^{*} = design action effect produced by strength limit states design loads acting in tension (Clauses 3.4.1, 3.6.2, 5.5.4)

(ϕN_{t}) = design capacity of a member in tension (Clauses 3.4.1, 3.6.2)

(ϕN_{tb}) = design capacity in tension for a bolt (Clause 4.4.3.3)

(ϕN_{tc}) = maximum capacity in tension of a simple coach screw (Table 4.14, Clauses 4.5.2.3 and 4.5.3.2)

N_{tp}^{*} = design action effect produced by strength limit states design loads acting in tension perpendicular to grain (Clause 3.5)

(ϕN_{tp}) = design capacity of a member in tension perpendicular to grain (Clause 3.5)

(ϕN_{θ}) = design bearing capacity at an angle to the grain of wood (Clause 3.2.6.3)

n = number of items, e.g. screws, nails, lateral restraints etc.

n_{a} = number of fasteners or rows of fasteners (Table 4.3(A) and 4.3(B), Table 4.11)

n_{C} = number of crossing members in a grid system (Paragraph E8.2)

n_{com} = number of elements (Clause 2.4.5.2)

n_{mem} = total number of members in a load-sharing system (Clause 2.4.5.2)

P^{*} = design point action effect produced by strength limit states design loads (Paragraph E8.2)

P_{eff}^{*} = effective point load on a grid system (Paragraph E8.2)

Q = live load, see AS/NZS 1170.0 (Tables B1 and G1)

Q^{*} = specified design load or design action effect combination (Appendices C and D)
= design action effect per nail or screw produced by strength limit states design loads (Paragraph C3)

Q_{D}^{*} = long duration (dead) design action effect (Paragraph C3.1)

Q_{E} = equivalent total test load (Appendix D)

Q_{L}^{*} = short duration (live) design action effect (Paragraph C3.1)

Q_{k} = characteristic capacity related to the type of fastener (Clauses 4.2.3, 4.3.3 and Paragraph C3.3.2)

Q_{kl} = characteristic capacity for a laterally loaded single bolt bearing parallel to the grain (Paragraph C4.1, Table 4.9)

Q_{kp} = characteristic capacity for a laterally loaded single bolt bearing perpendicular to the grain (Paragraph C4.2, Table 4.10)

Q_{sk} = characteristic capacity for a laterally loaded single bolt in a joint system (Clauses 4.4.2.4, 4.4.3.2 and 4.5.3)

Accessed by SWINBURNE UNIVERSITY OF TECHNOLOGY on 15 Aug 2007

@Seismicisolation

@Seismicisolation

$Q_{sk\theta}$ = system capacity for systems loaded at an angle to the grain (Figure 4.7(A), (B), (C) and (D))

Q_{skl} = system capacity for systems loaded parallel to the grain (Clause 4.4.2.4)

Q_{skp} = system capacity for systems loaded perpendicular to the grain (Clause 4.4.2.4)

R_{cl} = centre-line radius of curvature for curved and pitched cambered beams (Paragraph E13.2.1, Table E10)

R_{int} = internal radius of curvature for curved and pitched cambered beams (Figure E10, Paragraph E13.2.4)

(ϕR) = design capacity (Clauses 1.5.2.2, 2.1.2)

r = ratio of design load for loads of duration less than or equal to 5 days divided by total load (Tables E1, E2, E3 and E4)

r_i = distance to *i*th nail (Clauses 4.2.3.3 and 4.3.3.3)

$r_{max.}$ = distance to the farthest nail (Clauses 4.2.3.3 and 4.3.3.3)

S = slenderness coefficient

S^* = design action effect produced by the design loads for strength limit states as specified in AS/NZS 1170.0 (as E_d) or such other appropriate design loads (Clauses 1.5.2.2)

S_1 = slenderness coefficient, major axis (Clause 3.2.3.2, Paragraph E6.1)

S_2 = slenderness coefficient, minor axis (Clause 3.2.3.2)

S_3 = slenderness coefficient about major axis for discrete restraint systems (Clause 3.3.2.2)

S_4 = slenderness coefficient about minor axis for discrete restraint systems (Clause 3.3.2.2, Paragraph E7.3)

S_5 = slenderness coefficient for an individual shaft about the y-axis (Paragraph E4.4.1)

s = centre-to-centre spacing of supporting members in a grid system (Paragraph E8.2)

T_R^* = torque generated in a restraint under a rotation (Paragraph E7.5)

t = thickness of member (Figure F1); or
= the depth of the critical section (Paragraph E13.2.4); or
= for glued laminated beams, the thickness of the innermost lamination (Paragraph E13.2.4)

t_1 = thickness of first member of a two-member joint (Figure 4.6, Clauses 4.2.5, 4.3.5)

t_1, t_2, t_3, t_4 = thickness of timber in bolted joint (Table 4.9(A) and Table 4.10(A))

t_f = flange thickness of I-beam or box beam (Figure J3)

t_m = thickness of member of a nailed joint (Figure 4.6, Clause 4.2.5)

t_o = thickness of member of a nailed joint (Figures 4.6 and C1, Clauses 4.2.5, 4.3.5 and C2)

t_p = depth of nail penetration into second member of a two-member joint or third member of a three-member joint (Figures 4.6 and C1, Clauses 4.2.5, 4.3.5, 4.5.2.1 and C2)

Accessed by SWINBURNE UNIVERSITY OF TECHNOLOGY on 15 Aug 2007

@Seismicisolation

@Seismicisolation

t_{pi}	=	thickness of an inner ply of plywood (Tables J1 and J2)
t_{pl}	=	sum of thicknesses of plies with grain parallel to span (Clause 5.5.2)
t_{po}	=	thickness of outermost ply of plywood (Tables J1 and J2)
t_s	=	thickness of spaced column member (Figure E2, Paragraph E4)
t_w	=	thickness of timber member (Clause C2, Figure C1)
	=	thickness of web of I-beam or box beam (Paragraph J2)
V	=	nominal capacity of a member in shear
	=	volume in mm^3 of timber stressed above 80 percent of the maximum value in tension perpendicular to the grain (Clauses 2.4.6, 7.4.4, 8.4.7)
V^*	=	design action effect in shear produced by strength limit states design loads (Clauses 3.2.5 and 6.3.2 and Paragraphs E4.3, E9)
V^*_{bat}	=	longitudinal shear force on batten (Paragraph E4.3.3)
V_o	=	a reference volume of 10^7 mm^3 (Clauses 2.4.6, 7.4.4, 8.4.7)
(ϕV)	=	design capacity of a member in shear (Clauses 3.2.5, 6.3.2)
(ϕV_f)	=	fastener capacity in shear (Clause 4.7.3)
(ϕV_{fN})	=	bolt capacity in shear, threads included (Table 4.20)
(ϕV_{fX})	=	bolt capacity in shear, threads excluded (Table 4.20)
V^*_i	=	design action effect in shear in the plane of the plywood panel produced by strength limit states design loads (Clause 5.5.3)
(ϕV_i)	=	design capacity of plywood in shear (Clause 5.5.3)
V^*_p	=	design action effect for shear normal to the face of the plywood panel produced by strength limit states design loads (Clause 5.4.3, Figure 5.1)
(ϕV_p)	=	design capacity in planar shear of plywood (Clause 5.4.3)
V^*_{pack}	=	shear force action effect on packing pieces (Paragraph E4.3.2)
V^*_{sj}	=	design action effect for transverse shear at joint detail produced by strength limit states design loads (Clauses 4.4.6, 5.6.2)
(ϕV_{sj})	=	design capacity in transverse shear at eccentric joint detail (Clauses 4.4.6, 5.6.2)
V^*_1	=	shear action effect produced by strength limit states design loads (Paragraph E4.3.1)
V^*_2	=	shear action effect due to curvature of the column (Paragraph E4.3.1)
w^*	=	uniformly distributed action effect produced by strength limit states design loads (Paragraph E8.3)
W^*_{eff}	=	effective uniformly distributed action effect (Paragraph E8.3)
X	=	geometric section property, e.g. Z (Clause 2.1.2)
x	=	cartesian coordinate or distance (Paragraph E12.3)
y	=	cartesian coordinate
y_1, y_2	=	distance from the neutral axis of a plywood panel to the extreme fibre of each ply (Figures J4 and J5)

Accessed by SWINBURNE UNIVERSITY OF TECHNOLOGY on 15 Aug 2007

@Seismicisolation

@Seismicisolation

$\bar{y}_1, \bar{y}_2$	=	distance from the neutral axis of a plywood panel to the neutral axis of each individual veneer (Figure J4)
y_e	=	distance from column centroid to point of load application (Figure E1, Paragraph E3.2)
y_h	=	height above beam centroid of the point of load application (Figure E4, Paragraphs E6.3 and E6.4)
$y_{max.}$	=	distance from the neutral axis to the extreme fibre (Paragraph E6.1)
y_o	=	distance of lateral restraint below the neutral axis (Figures E1 and E4)
y_p	=	distance from the neutral axis to the extreme fibre of the outermost parallel ply
Z	=	section modulus about the axis of bending, mm^4 (Clauses 3.2.1.1 and 3.6.2)
Z_i	=	section modulus of plywood in plane (Clause 5.5.2)
Z_p	=	section modulus of plywood = I_p/y_p (Clause 5.4.2)
Z_x	=	section modulus about x-axis (Clause 3.2, Paragraph E7.5)
Z_y	=	section modulus about y-axis (Clause 3.2)
Z	=	cartesian coordinate
α	=	parameter related to tendency to split (Clause 4.1.5); or
	=	angle of taper of double tapered beams at the apex (Figures E9, E10)
$\alpha_1, \alpha_2, \alpha_3$	=	parameters defined in Paragraph E7
α_c	=	angle of taper in tapered beams at the compression edge (Paragraph E12.5)
α_p	=	pitch angle of tapered beams at the apex (Figure E9)
α_t	=	angle of taper in tapered beams at the tension edge (Paragraph E12.5)
β	=	moment diagram parameter (Figure E3(c)); or
	=	angle (radians) of apex zone of curved and pitch-cambered beams (Figure E10, Table E10)
γ	=	tangential cleavage, in newtons per millimetre (Clause 4.1.5)
Δ	=	deflection or joint displacement
Δ_A	=	displacement resulting in a resisting force (Paragraph E7.1)
Δ_I	=	initial displacement of fastener (Paragraph C3.3.3)
Δ_o	=	deformation of the joint including long duration effects (Paragraph C3.1)
ε	=	tangential shrinkage, percent (Clause 4.1.5)
θ	=	angle between the direction of the load and the direction of the grain; or
	=	for plywood, the angle between the direction of the load and the direction of the face grain (Figure J1)
θ_B	=	rotation resulting in a torque force in a restraint (Paragraph E7)
ρ_b, ρ_c	=	material constant (Clauses 3.3, 7.4.5, 8.4.8, Paragraphs E2 and H2.7)
ρ_b^*	=	material constant, when $k_{11} < 1.0$ (Clause 3.2.4)
ϕ	=	capacity factor (see Clause 2.3 and Appendix I)
ψ	=	load factor as appropriate, see AS/NZS 1170.0 (Tables B1 and G1)

Accessed by SWINBURNE UNIVERSITY OF TECHNOLOGY on 15 Aug 2007

@Seismicisolation

@Seismicisolation

TABLE F1

MODIFICATION FACTORS FOR STIFFNESS (*j*)

Factor	Definition	Text reference
		Section 2
j_2	Factor for duration of load for bending, compression and shear	2.4.1.2
j_3	Factor for duration of load for tension	2.4.1.2
		Section 5
j_6	Factor for moisture content for plywood and LVL	5.3.3 Section 8 8.4.3
		Section 6
j_9	Factor for immaturity of round timbers	6.4.1
		Appendix C
j_{12}	Factor for duration of load on nailed and screwed joints	C3.2
j_{13}	Factor for duration of load on nailed and screwed joints	C3.2
j_{14}	Factor for duration of load on split ring and shear-plate fasteners	C3.3

Accessed by SWINBURNE UNIVERSITY OF TECHNOLOGY on 15 Aug 2007

@Seismicisolation

@Seismicisolation

TABLE F2

MODIFICATION FACTORS FOR STRENGTH (k)

Factor	Definition	Text reference
		Section 2
k_1	Factor for load duration (see Appendix G)	2.4.1.1
k_4	Factor for in-service absorption or desorption of moisture by timber	2.4.2
k_6	Factor for temperature/humidity effect	2.4.3
k_7	Factor for bearing length	2.4.4
k_9	Factor for load sharing in grid systems	2.4.5
k_{11}	Factor for member size	2.4.6
k_{12}	Factor for instability	2.4.7
		Section 4
k_{13}	Factor for end grain effects	4.2.3, 4.3.3, 4.5.3
k_{14}	Factor for effect of double shear	4.2.3
k_{15}	Factor for effect of seasoning of timber	4.6.3, 4.7.3
k_{16}	Factor for plywood or metal side plates	4.2.3, 4.3.3, 4.4.3, 4.5.3
k_{17}	Factor for multiple fastener effect	4.2.3, 4.3.3, 4.4.3, 4.5.3, 4.6.3, 4.7.3
k_{18}	Factor for effect of tension loads	4.6.3, 4.7.3
		Section 5
k_{19}	Factor for moisture content of plywood	5.3.3
		Section 6
k_{20}	Factor for timber immaturity	6.4.1
k_{21}	Factor for effect of shaving	6.4.2
		Section 7
k_{23}	Factor for load sharing effect of laminating	7.3.2.1
		Appendix D
k_{26}	Factor related to design load duration	D.4.1
k_{27}	Factor for duration of test	D.4.1
k_2	Factor for prototype testing	D5.4
k_{28}	Factor for effect of sample size and coefficient of variation	D.5.4
		Appendix E
k_{tg}	Factor for grain orientation for single-tapered straight beams	E12.2.2
k_{tb}	Factor for taper angle for single-tapered straight beams	E12.2.3
k_{sh}	Factor for depth and curvature of curved and pitched cambered beams	E13.2.2
k_r	Factor for radius of curvature	E13.2.4
k_v	Factor for volume/size	E13.2.5
k_{tp}	Factor for radial stress	E13.2.6

Accessed by SWINBURNE UNIVERSITY OF TECHNOLOGY on 15 Aug 2007

@Seismicisolation

@Seismicisolation

APPENDIX G

DESIGN PROPERTIES OF STRUCTURAL TIMBER

(Informative)

G1 ADDITIONAL INFORMATION

Basic design properties and additional design information on roughly 40 species commonly used in Australia are given in AS 1720.2.

NOTE: Design information, including strength grouping, on hundreds of other species from Australia and overseas can be found in AS 2878 and in the following publications:

BERNI, C., BOLZA, E. and CHRISTENSEN, F.J. *South American timbers —the characteristics, properties and uses of 190 species*. CSIRO Division of Building Research, Melbourne, 1979.

BOLZA, E. and KEATING, *W. African timbers—the properties, uses and characteristics of 700 species*. CSIRO Division of Building Research, Melbourne, 1972.

BOLZA, E. and KLOOT, N.H. *The mechanical properties of 174 Australian Timbers*. Technological Paper No. 25. CSIRO Division of Forest Products, 1963.

KEATING, W.G. and BOLZA, E. Timbers of commerce, Vol. 1. South East Asia, Northern Australia and Pacific. Incata Press, Melbourne, 1982.

G2 EXAMPLES OF LOAD DURATION FACTORS FOR TYPICAL LOAD COMBINATIONS

Table G1 gives examples of load duration factor k_1 for load combinations given in AS/NZS 1170.0.

TABLE G1

LOAD DURATION FACTORS FOR TYPICAL LOAD COMBINATIONS FOR STRENGTH LIMIT STATE

Type of load (action)	AS/NZS 1170.0 specified load combination*	Load duration factor	
		Solid timber	Joints
Permanent action (dead load)	1.35 G	0.57	0.57
Permanent and short term imposed actions	1.2 G + 1.5 Q		
(a) Roof live load—Distributed		0.94	0.77
(b) Roof live load—Concentrated		0.97	0.86
(c) Floor live loads— Distributed		0.80	0.69
(d) Floor live loads— Concentrated		0.94	0.77
Permanent and long-term† imposed action	1.2 G + 1.5 $\psi_l Q$	0.57	0.57
Permanent, wind and imposed action	1.2 $G + W_u + \psi_c Q$	1.00	1.14
Permanent and wind action reversal	0.9 $G + W_u$	1.00	1.14
Permanent, earthquake and imposed action	$G + E_u + \psi_c Q$	1.00	1.14
Fire	$G + \psi_\ell Q$	0.94	0.77

* The notation used in this Table is drawn from AS/NZS 1170.0.

† Long-term in this context is the terminology in AS/NZS 1170.0 for the quasi-permanent component of live load, not to be confused with long-term duration of load of 5 months as given in Table 2.7.

Accessed by SWINBURNE UNIVERSITY OF TECHNOLOGY on 15 Aug 2007

@Seismicisolation

@Seismicisolation

APPENDIX H

DESIGN WITH IN-GRADE TESTED MATERIAL

(Normative)

H1 GENERAL

This Appendix sets out characteristic properties and design details relating to stress grades of which the characteristic properties have been established by in-grade evaluation in accordance with AS/NZS 4063.

NOTES:

1 This system of establishing stress grades is based on in-grade testing of samples selected from an identified population of timber and graded by an appropriate grading system. The population is clearly defined and the grading system is carefully chosen and proven to be consistent before in-grade testing is carried out.

2 It is intended to develop new stress grading systems along similar lines as for MGP grades through the use of AS/NZS 4490.

H2 MGP GRADES

H2.1 General

This Paragraph H2 specifies design properties and other specific details related to structural design using MGP grades. The design data is only applicable to timber marked with an MGP grade or otherwise suitably identified.

H2.2 Material requirements

The MGP grade properties given in Table H2.1 shall only be used in conjunction with mechanically graded seasoned softwood, for which the following requirements have been met:

(a) The timber has been mechanically graded in accordance with AS/NZS 1748.

(b) The applicability of the properties given in Table H1 have been verified by in-grade evaluation and periodically monitored in accordance with AS/NZS 4490.

(c) Manufacture is subject to continuous monitoring that confirms the continued applicability of the properties.

H2.3 Design procedures

Unless specified otherwise in this Appendix, design procedures for use with MGP grades shall be those for solid timber as specified elsewhere in this Standard.

H2.4 Design properties

H2.4.1 *Characteristic strengths for bending, tension, compression and shear and elastic moduli*

Characteristic strengths for bending, tension, compression and shear and elastic moduli are given in Table H2.1.

Accessed by SWINBURNE UNIVERSITY OF TECHNOLOGY on 15 Aug 2007

@Seismicisolation

@Seismicisolation

TABLE H2.1

CHARACTERISTIC PROPERTIES FOR MGP GRADES*

MGP grade	Characteristic strength, MPa				Short duration average modulus of elasticity‡ parallel to the grain	Short duration average modulus of rigidity for beams
	Bending	Tension parallel to grain	Shear in beams	Compression parallel to grain		
	f'_b	f'_t	f'_s	f'_c	E	G
MGP 15	41	23	9.1	35	15 200	1 010
MGP 12	28	15	6.5	29	12 700	850
MGP 10	16†	8.0	5.0	24	10 000	670

* Properties apply only for 35 mm and 45 mm thicknesses.

† For 45 mm thickness, f'_b for MGP 10 may be taken as 19 MPa.

‡ The modulus of elasticity given has been obtained from bending tests and contains the effects of shear.

H2.4.2 *Characteristic strengths for bearing, shear at joint details and tension perpendicular to the grain*

Characteristic strengths for bearing perpendicular and parallel to the grain, shear at joint details and tension perpendicular to the grain that correspond to the species strength group are given in Tables 2.2(A) and 2.2(B). Strength group SD6 shall be used except where the species has been specified.

H2.4.3 *Characteristic strength properties for design of joints*

Characteristic strength properties applicable for various fastener types related to species joint group classification are given in Section 4. Species joint group classification for MGP grades shall be as given in Table H2.2.

TABLE H2.2

JOINT GROUPS FOR MGP GRADES

Grade	Joint group
MGP 15	JD4
MGP 12	JD4
MGP 10*	JD5

* For MGP 10 grade JD4 may be used where 'heart-in' material is excluded (refer to manufacturer).

H2.4.4 *Design density*

Design densities for MGP grades for use in calculating dead load are given in Table H2.3.

TABLE H2.3

AVERAGE DENSITY OF MGP GRADES

Grade	Average density, kg/m^3
MGP 15	580
MGP 12	540
MGP 10	510

Accessed by SWINBURNE UNIVERSITY OF TECHNOLOGY on 15 Aug 2007

@Seismicisolation

@Seismicisolation

H2.5 Capacity factors

The capacity factor, (ϕ), given in Table 2.5 shall be used for the determination of design capacities for MGP grades.

H2.6 Modification factors

H2.6.1 *General*

All the appropriate modification factors given in Section 2 shall apply for the computation of design capacities for MGP grades except that the modification factor for size shall be as given in Clause H2.6.2.

H2.6.2 *Size factors for bending, tension, shear and compression*

The size factor, k_{11}, for use with the characteristic strength properties given for MGP grades in Table H1 for bending, tension, shear and compression is given in Table H2.4.

TABLE H2.4

SIZE FACTOR k_{11}

Properties	Depth of member*				
	70 to 140 mm	170 mm	190 mm	240 mm	290 mm
	Size factor, k_{11}				
Bending and tension (parallel to grain)	1.0	0.96	0.93	0.86	0.79
Compression (parallel to grain) and shear	1.0	0.98	0.96	0.93	0.89
All other properties†	1.0	1.0	1.0	1.0	1.0

* For depths greater than 140 mm, linear interpolation may be used.

† For tension perpendicular refer to Clause 2.4.6(e).

H2.7 Structural design

Structural design with MGP grades shall generally be in accordance with procedures given elsewhere in this Standard except that, for the computation of the stability factor for beam and column design, the material constant, ρ_b or ρ_c, shall be as given in Tables H2.5 and H2.6.

The maximum value of ρ_b or ρ_c used need not exceed the value computed for the case $r = 0.25$. In the case of beams where a temporary load causes a stress reversal, the value of ρ_b or ρ_c to be used is that corresponding to $r = 1.0$.

TABLE H2.5

MATERIAL CONSTANT, ρ_b, FOR BEAMS

MGP grade	Ratio (temporary design action effect)/(total design action effect), r				
	0	0.25	0.5	0.75	1.0
	Material constant, ρ_b, for beams*				
MGP 15	0.94	0.94	0.90	0.88	0.86
MGP 12	0.85	0.85	0.82	0.80	0.78
MGP 10	0.73	0.73	0.70	0.69	0.67

* These values are derived from equationE2(1) using Table H2.1 for E and f_b'.

Accessed by SWINBURNE UNIVERSITY OF TECHNOLOGY on 15 Aug 2007

@Seismicisolation

@Seismicisolation

TABLE H2.6

MATERIAL CONSTANT, ρ_c, FOR COLUMNS

MGP grade	Ratio (temporary design action effect)/(total design action effect), *r*				
	0	0.25	0.5	0.75	1.0
	Material constant, ρ_c, for columns*				
MGP 15, MPG 12 and MGP 10	1.06	1.06	1.01	0.98	0.96

* These values are derived from equation E2(3) using Table H2.1 for *E* and f'_c .

H3 A17 STRESS GRADE

H3.1 General

Paragraph H3 specifies design properties and other specific details related to structural design using the A17 stress grade. The design data is only applicable to timber marked with an A17 stress grade or otherwise suitably identified.

H3.2 Material requirements

The A17 stress grade properties given in Table H3.1 shall only be used in conjunction with visually graded seasoned hardwood of A17 stress grade, for which the following requirements have been met:

(a) The timber has been visually graded in accordance with the requirements for A17 stress grade in AS 2082.

(b) The applicability of the properties given in Table H3.1 have been verified by in-grade evaluation and periodically monitored in accordance with AS/NZS 4490.

(c) Manufacture is subjected to continuous monitoring that confirms the continued applicability of the properties.

H3.3 Design procedures

Unless specified otherwise in this Appendix, design procedures for use with A17 stress grade shall be those for solid timber as specified elsewhere in this Standard.

H3.4 Design properties

H3.4.1 *Characteristic strengths for bending, tension, compression and shear and elastic moduli*

Characteristic strengths for bending, tension, compression and shear and elastic moduli are given in Table H3.1.

TABLE H3.1

CHARACTERISTIC PROPERTIES FOR A17 STRESS GRADE*

Stress grade	Characteristic strength, MPa				Short duration average modulus of elasticity† parallel to grain	Short duration average modulus of rigidity for beams
	Bending (f'_b)	Tension parallel to grain (f'_t)	Shear in beams (f'_s)	Compression parallel to grain (f'_c)	(*E*)	(*G*)
A17	50	30	5.8	45	16 000	930

* Properties apply only for 35 mm and 45 mm thickness.

† The modulus of elasticity given has been obtained from bending tests and contains the effects of shear.

Accessed by SWINBURNE UNIVERSITY OF TECHNOLOGY on 15 Aug 2007

@Seismicisolation

@Seismicisolation

H3.4.2 *Characteristic strengths for bearing, shear at joint details and tension perpendicular to the grain*

Characteristic strengths for bearing perpendicular and parallel to the grain, shear at joint details and tension perpendicular to the grain that correspond to the species strength group SD4 shall be used for A17 stress grade and are given in Tables 2.3(A) and 2.3(B).

H3.4.3 *Characteristic strength properties for design of joints*

Characteristic strength properties applicable for various fastener types related to species joint group classification are given in Section 4. Species joint group classification for A17 stress grade shall be as given in Table H3.2.

TABLE H3.2

JOINT GROUP FOR A17 STRESS GRADE

Stress grade	Joint group
A17	JD3

H3.4.4 *Design density*

The design density for A17 stress grade for use in calculating dead load is given in Table H3.3.

TABLE H3.3

DESIGN DENSITY OF A17 STRESS GRADE

Stress grade	Design density, kg/m^3
A17	650

H3.5 Capacity factors

The capacity factor (ϕ) given in Table H3.4 shall be used for the determination of design capacities for A17 stress grade.

TABLE H3.4

VALUES OF CAPACITY FACTOR (ϕ) FOR CALCULATING THE DESIGN CAPACITY (ϕR) APPROPRIATE FOR A17 STRUCTURAL MATERIAL AND APPLICATION OF THE STRUCTURAL MEMBER

Structural material A17	Application of structural material*		
Characteristic design strengths	All structural elements* in house and secondary structural elements* in structures other than houses	Primary structural elements† in structures other than houses	Primary structural elements† in structures intended to fulfill an essential service or post disaster function
	Capacity factor, ϕ†		
f'_b, f'_t, f'_s and f'_c	0.85	0.70	0.65
f'_p, f'_ℓ, f'_{tp} and f'_{sj}	0.80	0.65	0.60

* Refer to definitions; structural element Clause 1.8.2.31; secondary structural element Clause 1.8.2.24; primary structural element Clause 1.8.2.20.

† Capacity factors are based on the requirements specified in Appendix I.

Accessed by SWINBURNE UNIVERSITY OF TECHNOLOGY on 15 Aug 2007

@Seismicisolation

@Seismicisolation

H3.6 Modification factors

H3.6.1 *General*

All the appropriate modification factors given in Section 2 shall apply for the computation of design capacities for the A17 stress grade except that the modification factor for size shall be as given in Clause H3.6.2.

H3.6.2 *Size factor for bending, tension, shear and compression*

The size factor, k_{11}, for use with the characteristic strength properties given for the A17 stress grade in Table H3.1 for bending, tension, shear and compression is given in Table H3.5.

TABLE H3.5

SIZE FACTOR k_{11}

Properties		Depth of member, mm		
		70 to 120	140 to 190	240 to 290
		Size factor, k_{11}		
For 35 mm thickness*	Bending (parallel to grain)	1.0	1.0	0.9
	Compression (parallel to grain), tension and shear	1.0	0.9	0.7
For 45 mm thickness*	Bending (parallel to grain)	0.9	0.9	0.9
	Compression (parallel to grain), tension and shear	0.9	0.8	0.65

* For tension perpendicular to grain, refer to Clause 2.4.6(e).

H3.7 Structural design

Structural design with A17 stress grade shall generally be in accordance with procedures given elsewhere in this Standard except that for the computation of the stability factor for beam and column design, the material constant, ρ_b or ρ_c, shall be as given in Tables H3.6 and H3.7.

TABLE H3.6

MATERIAL CONSTANT, ρ_b, FOR BEAMS

Stress grade	Ratio (temporary design action effect)/(total design action effect), r				
	0	0.25	0.5	0.75	1.0
	Material constants, ρ_b, for beams*				
A17	1.15	1.15	1.09	1.06	1.04

* These values are derived from Equation E2(1) using Table H3.1 for E and f'_b.

TABLE H3.7

MATERIAL CONSTANT, ρ_c, FOR COLUMNS

Stress grade	Ratio (temporary design action effect)/(total design action effect), r				
	0	0.25	0.5	0.75	1.0
	Material constants, ρ_c, for columns*				
A17	1.21	1.21	1.09	1.01	0.99

* These values are derived from Equation E2(3) using Table H3.1 for E and f'_c.

Accessed by SWINBURNE UNIVERSITY OF TECHNOLOGY on 15 Aug 2007

@Seismicisolation

@Seismicisolation

APPENDIX I

ASSIGNMENT OF CAPACITY FACTOR (ϕ) TO DESIGN PROPERTIES

(Normative)

I1 GENERAL

This Appendix specifies the procedures for determining the capacity factors to be assigned to the design properties of structural timber and timber based products when used in accordance with the requirements of this Standard.

NOTE: For the purposes of evaluation using AS/NZS 4063, ϕ should be taken as 0.8 and not from Clause 2.3.

I2 BASIS FOR ASSIGNMENT OF CAPACITY FACTOR

I2.1 General

The capacity factor, (ϕ) to be assigned to the design properties of structural timber based products shall be in accordance with the requirements specified in Table I1.

The capacity factors specified in Table I1 are based on consideration of the state of current knowledge of structural performance, the intended application of structural elements and the structural reliability of timber based structural materials in terms of equivalent performance with non timber based structural materials.

I2.2 Capacity factor (ϕ)

In assigning capacity factors, consideration shall be given to the basis for the establishment or evaluation of the design properties of the structural timber based products, the material variability, and the manufacturing process control procedures to provide an assurance that design properties are being consistently achieved over time, as detailed in Table I1.

I3 STRUCTURAL TIMBER BASED PRODUCTS

I3.1 Australian Standards

The requirements of Table I1 are applicable to the design properties of structural timber based products that are manufactured to the requirements of Australian Standards.

I3.2 Manufacturers' specifications

The requirements of Table I1 can be used by manufacturers as guidance for assigning capacity factors to the design properties of structural timber and timber based products that are manufactured to a particular manufacturing specification. The capacity factors shall not exceed those given in Table I1 for each category.

Accessed by SWINBURNE UNIVERSITY OF TECHNOLOGY on 15 Aug 2007

@Seismicisolation

@Seismicisolation

TABLE I1

PROCEDURE FOR ASSIGNING CAPACITY FACTOR (ϕ) TO THE DESIGN PROPERTIES OF STRUCTURAL MATERIAL

Design property	Application of structural members		
Basis of design property	Structural elements† in houses and secondary elements† in structures other than houses	Primary structural elements† in structures other than houses	Primary structural elements† in structures intended to fulfil an essential services or post disaster function
	Capacity factor, ϕ*		
• Established from in-grade evaluation‡ • Low material variability • High degree of process control during manufacture • Continuous monitoring§ and periodic monitoring§ of properties	0.90	0.85	0.80
• Established from in-grade evaluation‡ • Low to medium material variability • High degree of process control during manufacture • Continuous monitoring§ and periodic monitoring§ of properties	0.90	0.80	0.75
• Established from in-grade evaluation‡ • Medium to high material variability • Medium degree of process control during manufacture • Continuous monitoring§ and periodic monitoring§ of properties	0.90	0.75	0.70
• Established from in-grade evaluation‡ • Medium to high material variability • Low degree of process control during manufacture • No continuous monitoring§ and periodic monitoring§ of properties	0.85	0.70	0.65
• Not established by in-grade evaluation‡ • Material variability not quantified • Low degree of process control during manufacture • No continuous monitoring§ and periodic monitoring§ of properties	0.80	0.65	0.60

* Refer to definition: Capacity factor Clause 1.8.2.1.

† Refer to definitions: Structural element Clause 1.8.2.31; Secondary structural element Clause 1.8.2.24; Primary structural element Clause 1.8.2.20.

‡ Refer to definition: In-grade evaluation Clause 1.8.2.15.

§ Refer to definitions: Continuous monitoring Clause 1.8.2.5; Periodic monitoring Clause 1.8.2.19.

Accessed by SWINBURNE UNIVERSITY OF TECHNOLOGY on 15 Aug 2007

@Seismicisolation

@Seismicisolation

CHAPTER 4

MASONRY STRUCTURES

This Chapter consists of edited extracts from AS 3700—2001, *Masonry structures*. The Standard sets out rules relating to the structural use of masonry, both reinforced and unreinforced, in buildings.

Accessed by SWINBURNE UNIVERSITY OF TECHNOLOGY on 15 Aug 2007

@Seismicisolation

@Seismicisolation

STANDARDS AUSTRALIA

Australian Standard
Masonry structures

SECTION 1 SCOPE AND GENERAL

1.1 SCOPE AND APPLICATION

1.1.1 Scope

This Standard sets out minimum requirements for the design and construction of masonry, including unreinforced, reinforced and prestressed, using manufactured units of clay, calcium silicate and concrete laid in mortar, autoclaved aerated concrete (AAC) laid in thin-bed mortar, and square-dressed natural stone laid in mortar.

The Standard does not give values or material properties for the design and construction of square-dressed natural stone.

NOTES:

1 This Standard assumes that the structural design of masonry is entrusted to experienced structural engineers or similar appropriately qualified persons, and that the execution of such work is carried out under the direction of appropriately qualified persons who are experienced in masonry construction and who understand the structural requirements.

2 The Standard does not give specific requirements for prefabricated masonry panels or masonry in composite action with steel or concrete structural members. The principles of this Standard should be followed, as far as they are applicable, for such types of construction.

3 The provisions of this Standard do not include specification for design and construction of AAC laid in other than thin-bed mortar. However, for masonry so constructed the general principles of this Standard may be used.

1.1.2 Application

This Standard will be referenced in the Building Code of Australia by way of BCA Amendment 10 to be published by 1 January 2002, thereby superseding the previous edition, AS 3700—1998, which will be withdrawn 12 months from the date of the publication of this edition.

1.2 REFERENCED DOCUMENTS

The following documents are referred to in this Standard:

AS

1141		Methods of sampling and testing aggregates
1170		Minimum design loads on structures
1170.1	Part 1:	Dead and live loads and load combinations
1170.2	Part 2:	Wind loads
1170.3	Part 3:	Snow loads
1170.4	Part 4:	Earthquake loads
1302		Steel reinforcing bars for concrete
1303		Steel reinforcing wire for concrete
1304		Welded wire reinforcing fabric for concrete
1310		Steel wire for tendons in prestressed concrete

Accessed by SWINBURNE UNIVERSITY OF TECHNOLOGY on 15 Aug 2007

@Seismicisolation

@Seismicisolation

AS

1311	Steel tendons for prestressed concrete—7-wire stress-relieved steel strand for tendons in prestressed concrete
1313	Steel tendons for prestressed concrete—Cold-worked high-tensile alloy steel bars for prestressed concrete
1316	Masonry cement
1397	Steel sheet and strip—Hot-dipped zinc-coated or aluminium/zinc-coated
1478	Chemical admixtures for concrete, mortar and grout
1478.1	Part 1: Admixtures for concrete
1449	Wrought alloy steels—Stainless and heat-resisting steel plate, sheet and strip
1530	Methods for fire tests on building materials, components and structures
1530.4	Part 4: Fire-resistance tests of elements of building construction
1672	Limes and limestones
1672.1	Part 1: Limes for building
1684	Residential timber-framed construction
1684.2	Part 2: Non-cyclonic areas
1684.3	Part 3: Cyclonic areas
1684.4	Part 4: Simplified—Non-cyclonic areas
2870	Residential slabs and footings—Construction
2193	Methods for calibration and grading of force-measuring systems of testing machines
2601	Demolition of structures
2699	Built in components for masonry construction
2699.1	Part 1: Wall ties
2699.2	Part 2: Connectors and accessories
2699.3	Part 3: Lintels and shelf angles—Durability requirements
2701	Methods of sampling and testing mortar for masonry construction
2758	Aggregates and rock for engineering purposes
2758.1	Part 1: Concrete aggregates
2837	Wrought alloy steels—Stainless steel bars and semi-finished products
2870	Residential slabs and footings—Construction
2904	Damp-proof courses and flashings
3582	Supplementary cementitious materials for use with portland and blended cement
3582.1	Part 1: Fly ash
3582.2	Part 2: Slag—Ground granulated iron blast-furnace
3582.3	Part 3: Silica fume
3623	Domestic metal framing
3600	Concrete structures
3972	Portland and blended cements
4055	Wind loads for housing

AS/NZS

2311	Guide to the painting of buildings
2312	Guide to the protection of iron and steel against exterior atmospheric corrosion
3679	Structural steel
3679.1	Part 1: Hot-rolled bars and sections

Accessed by SWINBURNE UNIVERSITY OF TECHNOLOGY on 15 Aug 2007

@Seismicisolation

@Seismicisolation

AS/NZS	
4455	Masonry units and segmental pavers
4456	Masonry units and segmental pavers—Methods of test
4456.4	Method 4: Determining compressive strength of masonry units
4456.10	Method 10: Determining resistance to salt attack
4456.11	Method 11: Determining coefficients of expansion
4456.12	Method 12: Determining coefficients of contraction
4671	Steel reinforcing materials
BCA	Building Code of Australia
BS	
EN 12878	Specification for pigments for portland cement and portland cement products
5628-3	Code of practice for stone masonry
ISO	
9223	Corrosion of metals and alloys—Corrosivity of atmospheres—Classification
Austroads	
Bridge Design Code	

1.3 USE OF ALTERNATIVE MATERIALS OR METHODS

1.3.1 General

Provided that the requirements of Section 2 are met, this Standard shall not be interpreted in a way that prevents the use of alternative materials or methods of design or construction not specifically referred to herein.

NOTE: Where the intended use is subject to the control of a building authority, approval for the use of alternative materials or methods will need to be obtained from the relevant authority.

1.3.2 Existing structures

Where the strength or serviceability of an existing structure is to be evaluated, the general principles of this Standard shall be applied. Appropriate values for the properties of the materials in the structure shall be used.

1.4 INFORMATION TO BE PROVIDED ON DOCUMENTS

1.4.1 General

Documents shall show information necessary to construct the masonry, including the following:

(a) Category, type and work sizes, including the face shell width for units that are to be face-shell bedded (see Clause 3.2), of the masonry units as defined in Clauses 1.5.2.22 and 1.5.2.36.

(b) Value of the characteristic unconfined compressive strength $\left(f'_{uc}\right)$ required for the masonry units.

(c) Mix proportions of the mortar or, for proprietary thin-bed mortar, the specification.

(d) Finish to the joints and the depth of raking (if any) of the mortar joints.

(e) Bond pattern for the masonry.

(f) Values required for any other properties of the masonry or its components, where those values differ from values given in this Standard.

(g) Site control testing requirements for the masonry or its components.

(h) If appropriate, the value of the coefficient of expansion or contraction of the units that has been used in the design.

Accessed by SWINBURNE UNIVERSITY OF TECHNOLOGY on 15 Aug 2007

@Seismicisolation

@Seismicisolation

(i) For special masonry, where applicable—the values of the characteristic compressive strength (f'_m) and the characteristic flexural tensile strength (f'_{mt}) used in design of the masonry.

(j) For reinforced masonry—grade and type of reinforcement.

(k) For prestressed masonry—grade and type of tendons.

(l) For grouted masonry—the characteristic compressive cylinder strength of grout at 28 days (f'_c).

(m) The characteristic lateral modulus of rupture (f'_{ut}), if appropriate (see Clause 3.2).

(n) The classification of wall ties (see Clause 3.4).

(o) The strength and stiffness of accessories, where appropriate (see Clause 3.4).

(p) Salt attack resistance grade of units (see Clause 5.3).

1.4.2 Provision for demolition

An appropriate notation shall be included on the documents for any building or structure that is identified as being one that cannot be demolished without danger of unpremeditated collapse (see AS 2601).

1.5 DEFINITIONS

For the purpose of this Standard the definitions given below apply.

1.5.1 Administrative definitions

1.5.1.1 *Approved*

Except as otherwise stated, approved by the building authority.

1.5.1.2 *Building authority*

Body having statutory powers to control the design and erection of buildings or structures in the area in which the building or structure is to be erected.

1.5.1.3 *Documents*

Drawings and specifications that set out the work to be executed.

1.5.1.4 *Supervision*

Site control of work directed towards obtaining compliance with the design and the provisions of this Standard.

1.5.2 Technical definitions

1.5.2.1 *Area*

See bedded area, grout area, combined cross-sectional area, and design cross-sectional area as defined in Clause 4.5.

1.5.2.2 *Bed face*

The face of the masonry unit that is intended to be in direct contact with bed joint mortar.

1.5.2.3 *Bed joint*

See Joints.

Accessed by SWINBURNE UNIVERSITY OF TECHNOLOGY on 15 Aug 2007

@Seismicisolation

@Seismicisolation

1.5.2.4 *Bedding*

One of the following:

(a) *Bedding planes*

Those planes in the masonry formed by the horizontal joints between the bed faces of the units.

(b) *Full bedding*

Covering the entire plan area of the masonry unit with mortar during laying.

(c) *Face-shell bedding*

Covering the plan area of the face shells, but not the webs, of hollow masonry units with mortar during laying.

1.5.2.5 *Bond beam*

Horizontal reinforced masonry member forming part of the masonry.

1.5.2.6 *Buttress*

An engaged pier that provides lateral support (see also Clause 1.5.2.16 for dimensions).

1.5.2.7 *Cavity*

In members consisting of two leaves of masonry, the space between the leaves.

1.5.2.8 *Cement*

Cement complying with AS 3972 and AS 1316, as appropriate.

1.5.2.9 *Characteristic lateral modulus of rupture*

The characteristic lateral modulus of rupture of masonry units $\left(f'_{ut}\right)$ is the characteristic value of the flexural tensile strength of the masonry unit obtained when subjected to bending in the direction normal to the plane of the wall. In the absence of test data, the value of $\left(f'_{ut}\right)$ is not allowed to exceed 0.8 MPa.

1.5.2.10 *Characteristic value*

The value of the material property, which is exceeded by 95% of the material. For expansion or contraction the characteristic value is that value that is exceeded by 5% of the material.

1.5.2.11 *Coefficients of expansion and contraction*

The coefficients of expansion and contraction of masonry units as determined in accordance with AS/NZS 4456.11 and AS/NZS 4456.12.

1.5.2.12 *Column*

See Pier.

1.5.2.13 *Compressive strength*

One of the following:

(a) *For masonry units*

The characteristic unconfined compressive strength of masonry units $\left(f'_{uc}\right)$ when tested in accordance with AS/NZS 4456.4.

(b) *For masonry*

The characteristic unconfined compressive strength of masonry $\left(f'_{m}\right)$ determined in accordance with Clause 3.3.2.

Accessed by SWINBURNE UNIVERSITY OF TECHNOLOGY on 15 Aug 2007

@Seismicisolation

@Seismicisolation

1.5.2.14 *Concrete*

A mixture of portland cement, aggregate and water, with or without the addition of fly ash, ground granulated iron blast-furnace slag, silica fume and/or chemical admixtures.

1.5.2.15 *Core*

The void within the cross-section of a cored or hollow masonry unit.

1.5.2.16 *Dimensions of buttresses and piers*

One of the following:

(a) *Width and thicknesses of an isolated pier*

The larger and smaller horizontal dimensions, respectively.

(b) *Width of a buttress or engaged pier*

Horizontal dimension parallel to the wall to which it is bonded.

(c) *Thickness of a buttress or engaged pier*

Horizontal dimension at right angles to the wall to which it is bonded, including the wall thickness.

1.5.2.17 *Efflorescence*

Salts left on the surface of units after the evaporation of water. The surface deposits may take the form of either—

(a) loose crystalline salts; or

(b) amorphous films (non-crystalline) salts.

1.5.2.18 *Grout*

Highly workable concrete placed in cores or cavities to produce grouted masonry.

1.5.2.19 *Joint*

One of the following:

(a) *Bed joint*—a joint (typically horizontal) formed by the mortar on which the masonry units are laid.

(b) *Perpend*—a joint (typically vertical) formed between adjacent masonry units laid in the same course.

(c) *Collar joint*—a vertical joint filled with mortar between two leaves of masonry.

(d) *Control joint*—a joint or gap constructed in masonry to control and absorb movements in that masonry. Control joints include the following:

(i) Contraction joints (or opening control joints), which open as the masonry contracts or shrinks.

(ii) Expansion joints (or closing control joints), which close as the masonry expands.

(iii) Articulation joints, which open or close to allow structural movements.

1.5.2.20 *Lateral support*

The support (including a footing, buttress, cross-wall, beam, floor, or braced roof structure) that effectively restrains a wall or isolated pier in the direction of its thickness, except that an isolated pier may also have lateral support in the direction of its width.

Accessed by SWINBURNE UNIVERSITY OF TECHNOLOGY on 15 Aug 2007

@Seismicisolation

@Seismicisolation

1.5.2.21 *Masonry*:

Assemblage of masonry units properly bonded with mortar. The term includes the following.

(a) *Plain masonry*—masonry that is neither grouted nor reinforced.

(b) *Grouted masonry*—masonry in which some or all of the cavities in the masonry, or cores in hollow units, are filled with grout.

(c) *Unreinforced masonry*—masonry that is not reinforced, or where reinforcement is not taken into account for the design action.

(d) *Reinforced masonry*—masonry in which some or all grouted cavities or cores are reinforced with steel reinforcement to comply with the provisions of Section 8.

NOTE: Accessories, including bed joint mesh that do not comply with the requirements of Section 8 are not regarded as reinforcement for the purposes of this definition.

(e) *Prestressed masonry*—masonry in which some or all cavities or cores are reinforced with stressed tendons to comply with the requirements of Section 9.

(f) *Special masonry*—masonry with specified strength values higher than those specified in this Standard and which is tested (see Clause 11.7) during its construction to verify that those values have been achieved.

NOTE: The methods of testing for compressive and flexural strength of masonry are given in Appendices C and D.

1.5.2.22 *Masonry unit*

Masonry unit—a preformed component, intended for use in bonded masonry construction (see Figure 1.1). The term includes the following:

(a) *Categories*:

(i) *Solid unit*—a unit without cores but which may contain recesses (commonly called frogs) not greater than the 10% of gross volume and intended to be laid with full bed joints.

(ii) *Cored unit*—a unit with cores intended to be laid with its cores vertical and with full bed joints.

(iii) *Hollow unit*—a unit with cores intended to be laid with its cores vertical and with face-shell-bedded joints.

NOTE: Hollow units are tested using face-shell area.

(iv) *Horizontally cored unit*—a unit with cores intended to be laid with its cores horizontal and with full bed joints.

(v) *Special purpose unit*—a unit intended for a special purpose that does not fall within the categories of Items (i) to (iv).

Accessed by SWINBURNE UNIVERSITY OF TECHNOLOGY on 15 Aug 2007

@Seismicisolation

@Seismicisolation

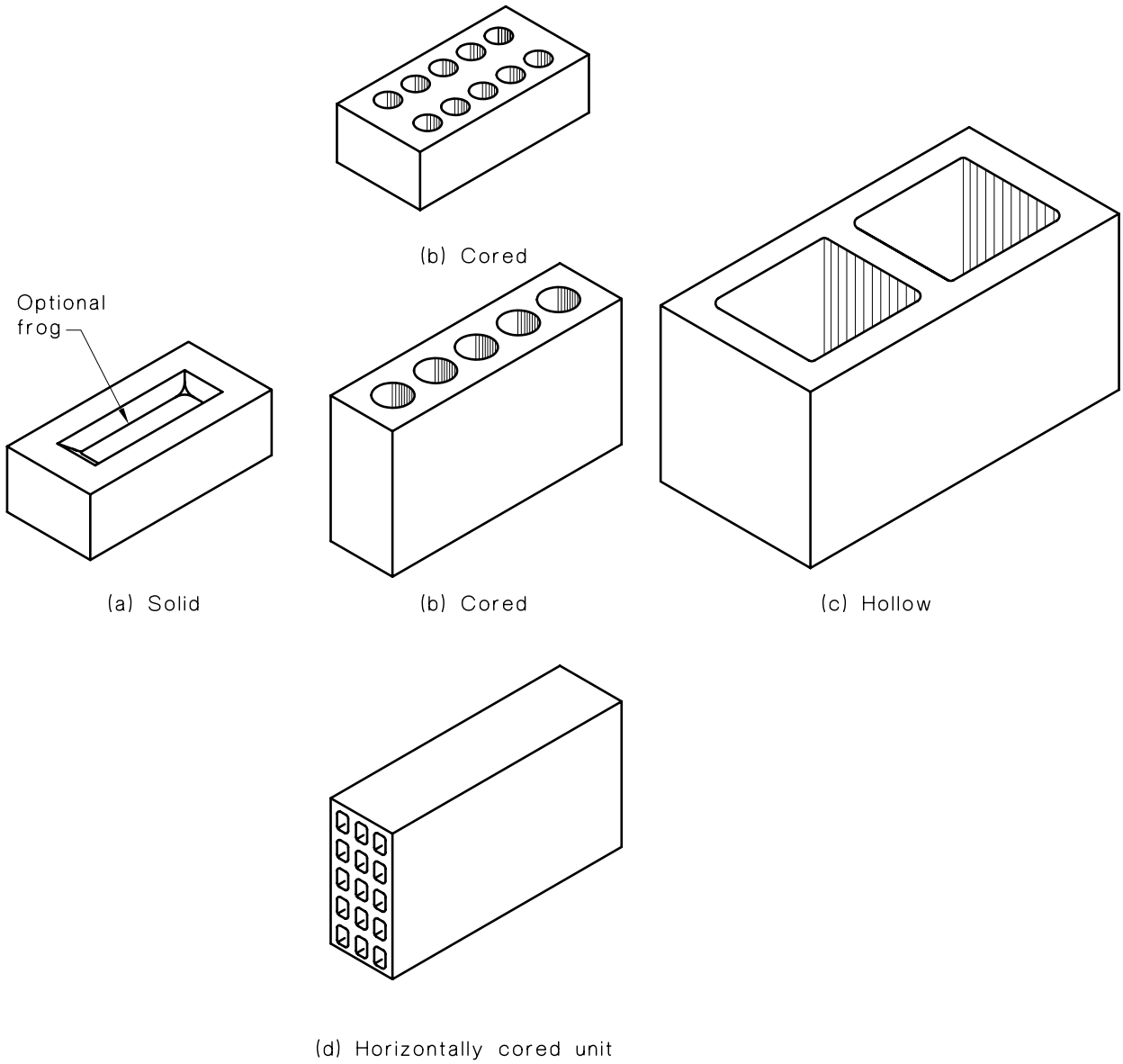

NOTE: This diagram is indicative only and is for the purpose of illustrating terms.

FIGURE 1.1 TYPICAL MASONRY UNITS

(b) *Types*:

(i) *Calcium silicate masonry unit*—a unit complying with AS/NZS 4455.

(ii) *Clay masonry unit*—a unit complying with AS/NZS 4455.

(iii) *Concrete masonry unit*—a unit complying with AS/NZS 4455.

(iv) *Autoclaved aerated concrete masonry unit* (AAC)—a unit complying with AS/NZS 4455.

(v) *Natural stone masonry units*—a unit of square-dressed natural stone complying with BS 5628-3.

(c) *Dimensions*:

(i) *Height*—the height based on work size.

(ii) *Length*—the length based on work size.

(iii) *Width*—the width based on work size.

Accessed by SWINBURNE UNIVERSITY OF TECHNOLOGY on 15 Aug 2007

@Seismicisolation

@Seismicisolation

(iv) *Face shell width*—the width of the face shell based on work size.

(v) *Full bed width*—the overall width of the unit based on work size.

1.5.2.23 *Member*

A wall or portion thereof (including a pier, buttress, bond beam or lintel), or an isolated pier.

1.5.2.24 *Member of mixed construction*

A member composed of more than one type of masonry systems (e.g. unreinforced and reinforced), more than one type of masonry unit, strength, durability grade or mortar.

1.5.2.25 *Mortar*

A mixture of cementitious material, sand (fine aggregate) and water, with or without additives or chemical admixtures (see also Thin-bed mortar).

1.5.2.26 *Mortar joints*

Mortar joints for other than AAC are classified according to the types of finish given to their exterior surface, which include the following:

(a) *Flush joint*—a joint that is finished flush with the surface of the masonry units.

(b) *Raked joint*—a joint that is raked out to a specified depth behind the face of the masonry.

(c) *Tooled joint*—a joint, including flush joint and raked joint, in which the surface is trowelled or ironed to a smooth, dense finish.

1.5.2.27 *Pier*

One of the following (see also Clause 1.5.2.16 for dimensions):

(a) *Engaged pier*—pier bonded integrally with the wall, which it stiffens locally, but with insufficient strength and stiffness to provide lateral support to the wall (see also Clauses 1.5.2.20 and 7.3.4.3, and Table 7.2).

(b) *Isolated pier*—isolated vertical element whose width and thickness do not exceed one-fifth of the height.

1.5.2.28 *Prestressing tendon*

Any bar, wire or strand used to prestress masonry.

1.5.2.29 *Rotational restraint*

The restraint against rotation of a wall or isolated pier by supports that allow the transfer of moment.

1.5.2.30 *Shear wall*

A wall that carries in-plane lateral forces.

1.5.2.31 *Structural backing*

One of the following:

(a) *Flexible structural backing*—a structural system having a stiffness EI, less than or equal to 0.5 times the uncracked stiffness of the veneer.

(b) *Stiff structural backing*—a structural system that is not classed as 'flexible'.

Accessed by SWINBURNE UNIVERSITY OF TECHNOLOGY on 15 Aug 2007

@Seismicisolation

@Seismicisolation

1.5.2.32 *Surf coast*

An area of salt water where breaking waves are a normal occurrence. (See Clauses 5.2.4 and 5.2.5.)

NOTES:

1 'Breaking waves' applies to beaches where surf breaks regularly and does not apply to wind driven white caps or choppy water.

2 As an indication of 'normal occurrence' breaking waves an average of 4 days/week or 60% of the time would satisfy this definition.

1.5.2.33 *Thin-bed mortar*

A proprietary material specifically manufactured to bond masonry units, with a thickness of not less than 2 mm and not greater than 4 mm.

1.5.2.34 *Ties*

Ties of which the classification and types are as follows:

(a) *Classifications*:

(i) *Veneer tie*—a tie connecting a masonry veneer to a frame or wall designed to resist lateral forces.

(ii) *Cavity tie*—a tie connecting two leaves of masonry that are separated by a cavity of any width.

(iii) *Collar joint tie*—a tie connecting two leaves through a collar joint.

(iv) *Head and column ties*—ties connecting masonry to a structural support.

(b) *Types*:

(i) *Type A tie*—a tie not required to have specific seismic design characteristics.

(ii) *Type B tie*—a tie required to have specific seismic design characteristics.

1.5.2.35 *Wall*

One of the following:

(a) *Cavity wall*—a wall consisting of two leaves of masonry separated by a cavity.

(b) *Diaphragm wall*—a wall of at least two leaves of masonry and vertical masonry diaphragms joining the leaves, constructed so as to achieve monolithic structural action.

(c) *Masonry veneer wall*—a wall consisting of a leaf of masonry together with a backing system that provides lateral support.

(d) *Single leaf wall*—a wall whose thickness is equal to the width of the masonry unit used in that wall.

(e) *Solid wall*—a wall whose thickness is greater than the width of one unit and in which the vertical joint between masonry leaves is filled solidly with mortar and which is intersected with header units or wire ties to give monolithic structural action.

(f) *Walls of geometric section*—walls of other than rectangular section constructed so as to achieve monolithic structural action.

1.5.2.36 *Work size*

The size of the masonry unit specified for its manufacture from which deviations are measured. Work sizes refer to the principal dimensions of the masonry unit, and are used for the calculation of all section properties in design and testing.

Accessed by SWINBURNE UNIVERSITY OF TECHNOLOGY on 15 Aug 2007

@Seismicisolation

@Seismicisolation

1.6 NOTATION

Unless a contrary intention is expressed—

(a) the notations used in this Standard shall have the meanings given below with respect to the structure or member or condition to which a clause is applied;

(b) where non-dimensional ratios are involved, both the numerator and denominator are expressed in consistent units; and

(c) dimensional units used in expressions or equations shall be consistent unless otherwise specified.

A_b = the bedded area of a masonry cross-section (see Clause 4.5.4)

A_c = the design cross-sectional area of grout in a grouted or reinforced masonry member (see Clause 4.5.7)

A_d = the design cross-sectional area of a member (see Clause 4.5.6)

= the combined bedded area and grout area, if any, of the specimen, in square millimetres (for ungrouted specimens, $A_d = A_b$) (see Paragraph C7.2)

A_{de} = the effective area of dispersion of the concentrated load on the member at mid-height (see Figure 7.7 and Clause 7.3.5.4)

A_{ds} = the bearing or dispersion area of a concentrated load in a member at the design cross-section under consideration (see Clauses 7.3.5.2, 7.3.5.3 and 7.3.5.4)

A_{dw} = the combined bedded area and grout area, if any, of the shear-resisting portion of a member; for members of solid rectangular cross-section, $A_{dw} = A_d$ (see Clause 7.5.1)

A_p = the cross-sectional area of prestressing tendons (see Clauses 9.3.3.2 and 9.5.3)

A_s = the total cross-sectional area of the main reinforcement in a reinforced masonry member (see Clauses 8.4, 8.6.2 and 8.7)

A_{sd} = the portion of the cross-sectional area of the main tensile reinforcement used for design purposes in a reinforced masonry member (see Clause 8.5)

A_{st} = the cross-sectional area of fully anchored longitudinal reinforcement in the tension zone of the cross-section under consideration (see Clauses 8.5 and 8.6.3)

A_{sv} = the cross-sectional area of shear reinforcement per spacing interval (see Clauses 8.6.2 and 8.6.3)

a_f = an aspect factor (see Clause 7.4.4.2 and Table 7.4)

a_v, a_h = slenderness coefficients for assessing slenderness ratio (see Clauses 6.3.2.2, 7.3.3.3 and 7.3.4.3)

a_f = a slenderness coefficient for assessing slenderness ratio in design for fire resistance for structural adequacy (see Clause 6.3.2.2)

a_1 = the distance from the end of the wall or pier to the nearest end of the bearing area (see Clause 7.3.5.4 and Figure 7.7)

B = a height factor used in calculating diagonal bending moment capacity (see Clause 7.4.4.2(b))

Accessed by SWINBURNE UNIVERSITY OF TECHNOLOGY on 15 Aug 2007

@Seismicisolation

@Seismicisolation

b	=	the width of a masonry member of solid rectangular cross-section; or
	=	the effective width of a member in accordance with Clause 4.5.2
b_v, b_h	=	bending coefficients for out-of-plane loads on walls (see Clause 7.4.4.3 and Table 7.5)
b_w	=	the width of the web of the shear-resisting area of a member. (For a solid rectangular cross-section, $b_w = b$.) (See Clause 8.6.3.)
C_c	=	the coefficient of creep (see Clause 9.3.3.2)
C_I	=	a coefficient evaluated from the test results (see Clause 6.5.4)
C_{c1}	=	the earthquake coefficient (see Paragraph A9.2)
C_s	=	a coefficient evaluated from the test results (see Clause 6.3.3)
C_v, C_h	=	robustness coefficients (see Table 4.2 and Clause 4.6.2)
D	=	the overall depth of a cross-section in the plane of bending (see Clause 8.6.4)
d	=	the effective depth of a reinforced masonry member (see Clauses 8.2, 8.5 and 8.6.3)
d_p	=	the effective depth of the tendon (see Clauses 9.2.2, 9.5.1, 9.5.2 and 9.5.3)
d_{sc}	=	the diameter of shear connector (see Clause 7.5.3)
d_1, d_2	=	the eccentricities of masses used in the bond test (see Paragraphs D6.3 and D6.5)
EI	=	stiffness of a structural system (see Clause 1.5.2.31)
E_m	=	the modulus of elasticity of masonry (short-term loading) (see Table 3.4)
E_L	=	the modulus of elasticity of masonry (long-term loading) (see Table 3.4)
E_p	=	the modulus of elasticity of prestressing tendons (see Clause 3.7.2)
E_s	=	the modulus of elasticity of reinforcement (see Clause 3.6.2)
e	=	the eccentricity of prestress (see Clause 9.5.4)
e_1, e_2	=	the eccentricities of vertical force (see Clause 7.3.4.5 and Table 7.3)
e_m	=	the free moisture shrinkage strain one year after prestressing (see Clause 9.3.3.2)
F_d	=	the design compressive force acting on the cross-section of a member, assessed from loads complying with Clause 2.6 for strength (in unreinforced masonry, F_d is typically that value of the design compressive force which acts simultaneously with a bending moment, shear force or other load action)
F_{dt}	=	the design tension force acting on the cross-section of a member, assessed from loads complying with Clause 2.6 for strength (see Clauses 8.7 and 9.7)
F_t	=	the characteristic strength of the tie appropriate to its duty rating (see Tables 3.5 and 3.6, Clauses 3.4 and 7.7)
F_{td}	=	the design compressive or tensile tie force (see Clauses 7.7 and 7.8)

Accessed by SWINBURNE UNIVERSITY OF TECHNOLOGY on 15 Aug 2007

@Seismicisolation

@Seismicisolation

F_{sp} = the total load at which the specimen fails (see Paragraphs C7.2 and D6.5)

F_o = the basic compressive strength capacity of a plain or grouted masonry cross-section (see Clause 7.3.2)

f' = a characteristic strength value (see Paragraph B2)

f'_{cg} = the design characteristic compressive strength of the grout (see Clause 3.5)

f'_c = the characteristic compressive cylinder strength of grout at 28 days (see Clause 3.5)

f'_m = the characteristic compressive strength of masonry (see Clause 3.3.2)

f'_t = the equivalent characteristic torsional strength (see Clause 7.4.4.2(b))

f'_{mb} = the characteristic compressive strength of masonry specimens for masonry units whose ratio of height to mortar bed joint thickness is 7.6 (see Clause 3.3.2)

f'_{mp} = the characteristic compressive strength of prestressed masonry at the transfer of prestress (see Clause 9.5.1)

f'_{mg} = the characteristic compressive strength of grouted masonry specimens manufactured and tested in accordance with Appendix C and determined in accordance with Appendix B (see Clause 7.3.2)

f'_{ms} = the characteristic shear strength of masonry (see Clause 3.3.4)

f'_{mt} = the characteristic flexural tensile strength of masonry (see Clause 3.3.3)

f'_{uc} = the characteristic unconfined compressive strength of masonry units (see Clauses 3.3.1 and 3.3.2)

f'_{ut} = the characteristic lateral modulus of rupture of masonry units (see Clause 1.5.2.9)

f'_{vm} = the characteristic shear strength of reinforced masonry (see Clause 8.6.3)

f_d = the minimum design compressive stress on the bed joint at the cross-section in a member (see Clauses 7.4.3.3 and 7.5.1)

= F_d/A_d

f_{de} = the design compressive stress on the bed joint for earthquake actions (see Paragraph A8.3)

f_{pt} = the stress in prestressing tendons at transfer (see Clause 9.3.3.2)

f_{pe} = the effective stress in the tendon after losses (see Clause 9.5.2)

f_p = the tensile strength of prestressing tendons (see Clause 3.7.1 and Table 3.8)

f_{py} = the yield strength of prestressing tendons (see Clause 3.7.1)

f_{ksp} = the (lower) 5 percentile value for a set of test results (see Paragraph B2)

f_{sp} = the unconfined compressive or flexural strength of a masonry test specimen (see Paragraphs B2, C7.2, D6.5 and D7.2)

f_{spi} = the least value of a set of specimen test results (see Paragraph B2)

Accessed by SWINBURNE UNIVERSITY OF TECHNOLOGY on 15 Aug 2007

@Seismicisolation

@Seismicisolation

$f_{sp}(1)$, $f_{sp}(i)$, $f_{sp}(n)$ = the group of test results in the assessment of characteristic value (see Paragraph B2)

f_{sy} = the design yield strength of reinforcement (see Clause 3.6.1 and Table 3.7)

f_{vr} = a shear stress value (see Clause 8.6.2)

f_{vs} = the design shear strength of main reinforcement (see Clause 8.6.3)

f_{yc} = the characteristic tensile yield strength of the connector (see Clause 7.5.3)

G = the assumed slope of the crack line (see Clause 7.4.4.2 and Table 7.4)

G_g = the gravity load (see Paragraph A8.3)

H = the clear height of a member between horizontal lateral supports

= for a member without top horizontal support, the overall height from the bottom lateral support

= the height of the member perpendicular to the direction of the shear load (see Clause 8.6.2)

H_1 = the height of taller opening (see Clause 7.3.4.3)

H_d = the design height (see Clause 7.4.4.2), as follows:

(a) when the top edge is not laterally supported—the actual height of the wall (H); or

(b) when the top edge is laterally supported—half the actual height of the wall ($H/2$)

h_u = the height of masonry unit in a wall (see Clauses 7.4.3.4 and 7.4.4.2)

k = a reduction factor for slenderness and eccentricity (see Clauses 7.3.3.2, 7.3.4.2 and 7.3.4.5)

k_1, k_2 = coefficients to assess lateral load capacity (see Clause 7.4.4.2 and Table 7.4)

k_3, k_4 = coefficients used for prestressed bending moment (see Clause 9.5.2)

k_a = the aspect ratio factor for the specimen (see Paragraph C7.2 and Table C1)

k_b = the concentrated bearing factor (see Clause 7.3.5.4)

k_c = a strength factor for grout in compression (see Clauses 7.3.2 and 8.4)

k_h = a factor reflecting the influence of the ratio of the masonry unit height to mortar bed joint thickness used in assessing characteristic compressive strength for masonry other than special masonry (see Table 3.2)

k_k = a characteristic value used to assess a characteristic strength value of a population from a set of representative test results (see Paragraph B2 and Table B1)

k_m = a factor used to derive the characteristic compressive strength of masonry (see Table 3.1)

k_{mt} = a factor used to assess horizontal and vertical bending moment capacities (see Clauses 7.4.2 and 7.4.3.2)

k_p = the perpend spacing factor (see Clause 7.4.3.4)

Accessed by SWINBURNE UNIVERSITY OF TECHNOLOGY on 15 Aug 2007

@Seismicisolation

@Seismicisolation

k_s = a reduction factor used in assessing the capacity of reinforced members in compression (see Clause 8.4)

k_{sw} = a reduction factor used in assessing the design shear capacity of a wall (see Clause 8.6.2)

k_{sp} = a factor used in evaluating the flexural tensile strength of masonry pier test specimens (see Paragraph D7.2)

k_u = the neutral axis parameter, being the ratio, at ultimate strength under any combination of bending and compression of the depth to the neutral axis from the extreme compressive fibre, to d (see Clauses 8.2 and 9.2)

k_t = a thickness coefficient (see Clauses 4.6.2, 7.3.3.3, 7.3.4.3 and Table 7.2)

k_v = a shear factor (see Clause 3.3.5 and Table 3.3)

K_d = the deflection amplification factor (see Paragraph A8.2 and Table A1)

L = the clear length of a wall between vertical lateral supports; or

= for a wall without a vertical support at one end or at a control joint or for walls containing openings, the length to that unsupported end or control joint or edge of opening

= for a beam, the span of that beam from centre to centre of bearings

= the length of the member in the direction of the shear load (see Clause 8.6.2)

L_o = the length of opening (see Clause 7.4.4.2 and Table 7.4)

L_d = the design length, (see Clause 7.4.4.2) as follows:

= (a) when only one vertical edge of the wall is laterally supported—the actual length of the wall (L); or

(b) when both vertical edges are laterally supported—half the actual length of the wall ($L/2$); or

(c) when an opening is present in the wall—the distance from the laterally supported end of the wall to the nearest edge of the opening

L_e = the effective dispersion length of the load (see Figure 7.7)

L_r = the clear length of a wall between vertical lateral supports; or

= for a wall without a vertical support at one end or at a control joint or for walls containing openings, the length to that unsupported end or control joint or edge of opening

L_{es} = the percentage loss of prestress due to masonry creep and moisture movement (see Clause 9.3.3.2)

ln = the Napierian logarithm

l = the distance between the anchorages at the ends of the member (see Clause 9.5.2)

l' = the distance from the centroid of the reinforcement under consideration to the tensile end of the member (see Clause 8.6.2)

l_u = the length of masonry unit (see Clause 7.4.4.2)

M_{cd} = the diagonal bending moment capacity per unit length of diagonal crack line (see Clause 7.4.4.2(b))

@Seismicisolation

Accessed by SWINBURNE UNIVERSITY OF TECHNOLOGY on 15 Aug 2007

@Seismicisolation

M_{ch} = the horizontal bending moment capacity of a wall (see Clause 7.4.3.2)

M_{cr} = the ultimate cracking bending moment (see Clause 9.5.4)

M_{cv} = the vertical bending moment capacity of a member (see Clause 7.4.2)

M_d = the design bending moment acting on the cross-section of a member, assessed from loads complying with Clause 2.6 for strength (see Clauses 8.5 and 9.5.1)

M_{dh} = the design horizontal bending moment resulting from transient out-of-plane forces acting on a wall in horizontal spanning action (see Clause 7.4.3.2)

M_{dp} = the bending moment capacity of masonry wall (see Clause 9.5.1)

M_{dv} = the design vertical bending moment resulting from transient out-of-plane forces acting on a member in vertical spanning action (see Clause 7.4.2)

M_{sp} = the bending moment about the centroid of the bedded area of the test joint at failure in a masonry test specimen (see Paragraphs D6.5 and D7.2)

$M1$, $M2$, $M3$, $M4$ = the classification of mortar types (see Clause 10.4 and Table 10.1)

m_1, m_2, m_3 = the masses of components used in flexural strength testing (see Paragraphs D6.3 to D6.5)

n = the number of results under consideration (see Paragraphs B2 and H3 to I5)

n_r = the number of results remaining in assessment of strength values from test results (see Paragraph H3.2)

P = the effective prestressing force (after losses) (see Clause 9.5.4)

P_v = the applied uniform vertical load (see Clause 8.6.2)

R_f = the structural response factor (see Paragraph A8.2 and Table A1)

R_{f1}, R_{f2} = restraint factors (see Clause 7.4.4.2)

$R0$, $R1$, $R2$, $R3$, $R4$, $R5$ = classification of corrosion resistance ratings (see Table 5.1)

r = the width of the connector (see Clause 7.5.3)

r_h = the proportion of the vertical shear plane that is intersected by masonry header units (see Clause 3.3.4)

s = the spacing of shear reinforcement along the member (see Clause 8.6.3)

s_p = the minimum overlap of masonry units in successive courses (see Clause 7.4.3.4)

S_r = the slenderness ratio of a member (see Clause 7.3.4.3)

S_{rf} = the slenderness ratio in design for fire resistance for structural adequacy (see Clause 6.3.2.2)

S_{rs} = the simplified slenderness ratio of a member (see Clause 7.3.3.3)

t = the overall thickness of a masonry member cross-section perpendicular to the principal axis under consideration (see Clauses 6.3.2.2, 7.3.3.3, 7.3.4.3)

t_b = the bedded thickness of a member (see Clause 4.5.1)

@Seismicisolation

Accessed by SWINBURNE UNIVERSITY OF TECHNOLOGY on 15 Aug 2007

@Seismicisolation

t_c = the period to failure in relation to insulation (see Clause 6.5.4)

t_f = the period to failure in relation to structural adequacy (see Clause 6.3.3)

t_j = the mortar joint thickness (see Clause 7.4.4.2)

t_m = the material thickness of member (see Clause 6.5.4)

t_r = the minimum thickness of a member (see Clause 4.6.2)

t_s = the thickness of face shell of a hollow masonry unit at the thinnest point (see Clause 7.4.4.2(b))

t_u = the width of masonry unit (measured through the wall) (see Clauses 7.4.3.4, 7.4.4.2 and Paragraph D6.4)

t_w = the overall thickness of a wall or isolated pier (see Clause 7.3.4.5)

t_{fs} = the thickness of the face shell for hollow block masonry or flange thickness for diaphragm walls as defined in Clause 7.3.4.5(b)

t_{wp} = the overall thickness of a masonry wall plus an engaged pier or buttress (see Table 7.2)

u = the thickness of the connector (see Clause 7.5.3)

V = the coefficient of variation in a set of specimen test results (see Paragraph B3)

V_c = the design shear strength of a shear connector (see Clause 7.5.3)

V_d = the design shear force acting on the cross-section of a member, assessed from loads complying with Clause 2.6 for strength (see Clauses 7.5.1 and 8.6.2)

V_o = the shear bond strength of an unreinforced masonry cross-section (see Clause 7.5.1 and Paragraph A8.3)

V_1 = the shear friction strength of the shear section (see Clause 7.5.1)

V_{1e} = the shear friction strength of the shear section under earthquake actions (see Paragraph A8.3)

V_{Ao} = the shear rupture strength of the shear section used in AAC masonry (see Clause 7.5.1)

V_{A1} = the shear friction strength of the shear section used in AAC masonry (see Clause 7.5.1)

V_{sc} = the characteristic shear strength of a connector (determined by tests) (see Clause 7.5.3(b))

w_d = the total design wind, earthquake or similar pressure acting on a wall (see Clauses 7.4.4.2 and 7.4.4.3)

x = the depth of compression zone (see Clause 9.5.1)

X_1, X_i, X_n = a group of test results in the assessment of strength values where n is the number of test results (see Paragraph H3.2)

X_i = the ith result from a group of test results (see Paragraph H3.2)

X_m = the mean of a group of test results (see Paragraph H4)

X_1, X_i, X_{nr} = the group of test results in the assessment of strength values following the exclusion of suspect values from the set of results (see Paragraph H3.2)

X_s = the standard deviation of a group of test results (see Paragraph H5)

@Seismicisolation

Accessed by SWINBURNE UNIVERSITY OF TECHNOLOGY on 15 Aug 2007

@Seismicisolation

Y_I = the natural logarithm; $Y_I = ln(X_i)$ of the remaining test results (see Paragraph H3.2)

Y_m = the mean of the logarithms (see Paragraph H3.2)

Y_s = the standard deviation of the logarithms (see Paragraph H3.2)

Y_u = the upper rejection limit in the assessment of strength values from test results (see Paragraph H3.2)

Y_1 = the lower rejection limit in the assessment of strength values from test results (see Paragraph H3.2)

Z = the section modulus of the uncracked section, referred to the extreme fibre at which cracking occurs (see Clause 9.5.4)

Z_d = the section modulus of the design cross-sectional area, A_d, of a member (see Clause 4.5.8)

= for plain masonry, the section modulus of the bedded area (see Clauses 7.4.2 and 7.4.3.2)

= the section modulus of the fractured section in a beam (see Paragraph D7.2)

Z_u = the lateral section modulus of the masonry units (see Clause 7.4.3.2)

Z_p = the lateral section modulus based on mortar contact area of the perpend joints (see Clause 7.4.3.2)

Z_t = the equivalent torsional section modulus measured normal to the diagonal crack line (see Clause 7.4.4.2(b))

σ_{pu} = the tensile stress in the tendons at the ultimate strength limit state (see Clause 9.5.2)

α = a slope factor (see Clause 7.4.4.2 and Table 7.4)

ϕ = the capacity reduction factor for design strength of unreinforced, reinforced, prestressed masonry, wall ties and accessories (see Clause 4.4)

Accessed by SWINBURNE UNIVERSITY OF TECHNOLOGY on 15 Aug 2007

@Seismicisolation

@Seismicisolation

SECTION 2 PERFORMANCE REQUIREMENTS FOR DESIGN

2.1 SCOPE OF SECTION

This Section sets out general requirements for the design of masonry. Particular requirements for the structural design of unreinforced masonry are set out in Section 7, for reinforced masonry in Section 8 and for prestressed masonry in Section 9.

2.2 AIM

The aim of design is to provide a structure that is durable, fire resistant, serviceable and has adequate strength and stability while serving its intended function and satisfying other relevant requirements such as resistance to water penetration, robustness, ease of construction and economy.

2.3 PERFORMANCE REQUIREMENTS

2.3.1 Durability

A masonry member or structure shall withstand the expected wear and deterioration throughout its intended life, taking into account the exposure environment and importance of the structure, without the need for undue maintenance.

2.3.2 Fire resistance

A masonry member or structure shall have a fire resistance so that the member can, for the required period, perform its structural function and if necessary prevent the spread of fire.

2.3.3 Serviceability

A masonry member or structure shall have a low probability of failure so as to be serviceable and fit for the purpose for which it was constructed throughout its intended life.

2.3.4 Strength

A masonry member or structure shall have a low probability of structural failure when subjected to the loads that can reasonably be expected throughout its intended life.

2.3.5 Stability

A masonry member or structure shall have a low probability of instability when subjected to the loads that can reasonably be expected throughout its intended life.

2.3.6 Other requirements

A masonry member or structure shall have a low probability of failing to meet any other appropriate design requirement (e.g. resistance to water penetration) throughout its intended life.

2.4 DESIGN REQUIREMENTS

2.4.1 Design for durability

A masonry member or structure designed for durability in accordance with Section 5 is deemed to meet the requirements of Clause 2.3.1.

2.4.2 Design for fire resistance

A masonry member or structure designed for fire resistance in accordance with Section 6 is deemed to meet the requirements of Clause 2.3.2.

Accessed by SWINBURNE UNIVERSITY OF TECHNOLOGY on 15 Aug 2007

@Seismicisolation

@Seismicisolation

2.4.3 Design for serviceability

A masonry member or structure designed for serviceability as set out in Clauses 2.5.1 and 2.5.2 for the loads given in Clause 2.6 in accordance with Sections 4, 7, 8 or 9, as appropriate, is deemed to meet the requirements of Clause 2.3.3.

2.4.4 Design for strength

A masonry member or structure designed for strength as set out in Clauses 2.5.1 and 2.5.3 for the loads given in Clause 2.6 in accordance with Sections 4, 7, 8 or 9, as appropriate, is deemed to meet the requirements of Clause 2.3.4.

2.4.5 Design for stability

A masonry member or structure designed for stability as set out in Clauses 2.5.1 and 2.5.4 for the loads given in Clause 2.6 in accordance with Sections 4, 7, 8 or 9, as appropriate, is deemed to meet the requirements of Clause 2.3.5.

2.4.6 Design for other requirements

A masonry member or structure designed for other requirements as set out in Clauses 2.7 to 2.9 in accordance with Sections 4, 7, 8 or 9, as appropriate, is deemed to meet the requirements of Clause 2.3.6.

2.5 SERVICEABILITY, STRENGTH AND STABILITY

2.5.1 General

Calculations related to serviceability, strength and stability shall—

(a) be in accordance with accepted principles of mechanics;

(b) provide for all loads and forces to be transferred through the structure to the foundation;

(c) provide for compatibility between each masonry member and the structural members giving vertical and, where required, lateral support to that masonry member;

(d) be based on the material properties of the masonry in accordance with Section 3; and

(e) be consistent with the assumptions that—

  (i) plane sections remain plane under bending actions;

  (ii) there is a recognized stress-strain relationship for masonry; and

  (iii) the tensile strength of unreinforced masonry be taken as zero except for stresses resulting from wind, earthquake and similar forces of a short-term, transient nature.

2.5.2 Design for serviceability

2.5.2.1 *General*

A masonry member or structure shall be designed for serviceability by controlling or limiting deflections and cracking arising from the actions specified in Clause 2.6 and by providing member robustness as specified in Clause 4.6. For masonry that is not subject to aesthetic limitations or durability requirements in reinforced masonry, the crack width limit shall be 1 mm.

2.5.2.2 *Differential movements*

A masonry member or structure shall be designed to allow movements to be controlled or isolated so that damage to the masonry, the building and its components is avoided and the structural and other requirements are satisfied.

Accessed by SWINBURNE UNIVERSITY OF TECHNOLOGY on 15 Aug 2007

@Seismicisolation

@Seismicisolation

The movements to be allowed for shall include the following:

(a) The expansion characteristics of clay masonry and the shrinkage characteristics of concrete masonry, calcium silicate masonry and autoclaved aerated concrete masonry.

(b) Thermal movements.

(c) Deflections, shortening, shrinkage, creep and similar deformations in adjacent or associated materials.

(d) Foundation movements.

(e) Deformation due to construction loads or construction sequences.

2.5.3 Design for strength

A masonry member or structure shall be designed for strength as follows:

(a) The loads and other actions shall be as specified in Clause 2.6.

(b) The design strength shall be determined in accordance with the requirements of Sections 7, 8 and 9, as appropriate.

(c) The member shall be proportioned so that its design strength is not less than the design action effect.

2.5.4 Design for stability

The structure as a whole and its parts shall be designed to prevent instability due to overturning, uplift and sliding under the loads and other actions specified in Clause 2.6.

2.6 LOADS AND LOAD COMBINATIONS

2.6.1 Loads, and other forces and actions

2.6.1.1 *Dead, live, wind, snow and earthquake loads*

The dead loads, live loads, wind loads, snow loads and earthquake loads used in structural design shall be those specified in AS 1170.1, AS 1170.2, AS 1170.3, AS 1170.4 and AS 4055, as appropriate. For earthquake actions the additional requirements of Appendix A shall apply.

2.6.1.2 *Other forces and actions*

Account shall be taken of other forces and actions that could significantly affect the stability, strength and serviceability of the structure and its component members, including the following:

(a) Earth pressure, with or without ground water pressure.

(b) Liquid pressure.

(c) Construction loads and procedures.

(d) Foundation movements.

(e) Shrinkage or expansion effects.

(f) Axial shortening effects.

(g) Creep effects.

(h) Temperature effects.

(i) Interactions with other materials and members or between different masonry materials.

(j) Design of masonry members of bridges for loads resulting from floods or collision, which shall be carried out in accordance with the *Austroads Bridge Design Code*, as appropriate.

Accessed by SWINBURNE UNIVERSITY OF TECHNOLOGY on 15 Aug 2007

@Seismicisolation

@Seismicisolation

2.6.2 Design load combinations

Structures, as a whole, and component members shall be designed to resist each compatible simultaneous combination of applied forces acting on them, including each of the load-factored combinations for factored loads given in AS 1170.1 and AS 1170.4.

2.6.3 Design loads for lateral supporting members

The horizontal design load acting on a structural member or system providing lateral support to a masonry member shall be the greater of the following:

(a) The sum of the simple static reactions to the applied horizontal forces for the appropriate load combination and 2.5% of the vertical load that the masonry member is designed to carry.

(b) 0.4 kPa acting on the appropriate tributary area of supported masonry.

NOTE: Design loads specified in this Clause are considered appropriate for each of the limit states and do not require additional factoring.

2.6.4 Design loads for connections to lateral supports

The horizontal design load acting on a connection providing lateral support to a masonry member shall be the value derived from Clause 2.6.3 increased by a factor of 1.25.

2.7 OTHER DESIGN REQUIREMENTS

2.7.1 General

Requirements such as resistance to water penetration, fatigue, progressive collapse and any special performance requirements shall be considered where relevant and, if significant, be taken into account in the design of the structure in accordance with appropriate engineering principles and this Standard.

2.7.2 Design for water penetration

When moisture penetration is required to be prevented, a masonry member or structure shall be designed, constructed and protected against passage of moisture in accordance with Clause 4.7.

2.7.3 Design for accidental damage

The structure and its component members shall be designed to take into account the possibility of abnormal load conditions, and to restrict to a reasonable level the adverse consequences, including progressive collapse, that could result from failure caused by such load conditions.

2.7.4 Masonry under construction

Account shall be taken of the lower stability, stiffness and strength of newly constructed masonry.

2.8 THERMAL INSULATION

Where it is necessary to limit thermal transmission through a wall, the wall shall be of appropriate materials and construction.

2.9 SOUND INSULATION

Where it is necessary to limit the transmission of sound through a wall, the wall shall be of appropriate materials and construction.

Accessed by SWINBURNE UNIVERSITY OF TECHNOLOGY on 15 Aug 2007

@Seismicisolation

@Seismicisolation

SECTION 3 DESIGN PROPERTIES

3.1 SCOPE OF SECTION

This Section sets out design properties for masonry and its component materials, connectors, reinforcement and prestressing tendons.

The design properties of masonry and its component materials, connectors, reinforcement and prestressing tendons shall be determined in accordance with Clauses 3.2 to 3.7.

NOTE: Specifications for materials are given in Section 10.

3.2 MASONRY UNITS

The work size width, height, length, face shell width (for units which are to be face-shell-bedded) and the characteristic unconfined compressive strength (f'_{uc}) used in the design shall be specified where appropriate. If appropriate the characteristic lateral modulus of rupture (f'_{ut}) shall also be specified.

3.3 MASONRY

3.3.1 General

Where the values of characteristic strengths used in structural design are to be based on the results of tests, including, in the case of special masonry, the values of f'_m or f'_{mt}, the results shall be from tests on specimens made from materials having the same properties and strength characteristics as those to be used in the actual construction.

Masonry constructed from square dressed natural stone shall be designed as special masonry.

3.3.2 Compressive strength

The characteristic compressive strength of masonry (f'_m) shall be as follows:

(a) For masonry other than special masonry, one of the following:

(i) For masonry constructed with other than AAC units, the value of the characteristic compressive strength shall be taken as $f'_m = k_h f'_{mb}$

where

$f'_{mb} = k_m \sqrt{f'_{uc}}$

k_m = a factor used to derive the characteristic compressive strength of masonry (see Table 3.1)

k_h = a factor reflecting the influence of the ratio of masonry unit height to mortar bed joint thickness derived from Table 3.2

f'_{uc} = the characteristic unconfined compressive strength of masonry units in megapascals.

The values of f'_{mb} in Table 3.1 are deemed to satisfy this formula.

(ii) For AAC masonry with thin bed mortar, the value of the characteristic compressive strength shall be taken as $f'_m = f'_{uc}$.

For concrete and AAC units, f'_{uc} shall be the 28-day strength. If tested at another age, an appropriate correction shall be made to obtain the 28-day strength.

(b) For special masonry, the value determined in accordance with Appendix B from tests carried out in accordance with Appendix C.

Accessed by SWINBURNE UNIVERSITY OF TECHNOLOGY on 15 Aug 2007

@Seismicisolation

@Seismicisolation

TABLE 3.1

CHARACTERISTIC COMPRESSIVE STRENGTH OF MASONRY f'_{mb}

Type of masonry unit	Bedding type	Mortar classification (see Note 2)	Characteristic unconfined compressive strength of unit (f'_{uc}) MPa								k_m
			5	10	15	20	25	30	40	≥50	
Clay	Full	M2	2.5	3.5	4.3	4.9	5.5	6.0	7.0	7.8	1.1
Clay	Full	M3	3.1	4.4	5.4	6.3	7.0	7.7	8.8	9.9	1.4
Clay	Full	M4	3.4	4.7	5.8	6.7	7.5	8.2	9.5	10.6	1.5
Clay	Face shell	M3	3.6	5.1	6.2	7.2	8.0	8.8	10.1	11.3	1.6
Concrete	Full	M3	3.1	4.4	5.4	6.3	7.0	7.7	8.8	9.9	1.4
Concrete	Face shell	M3	3.6	5.1	6.2	7.2	8.0	8.8	10.1	11.3	1.6
Calcium silicate	Full	M3	3.1	4.4	5.4	6.3	7.0	7.7	8.8	9.9	1.4
Calcium silicate	Full	M4	3.4	4.7	5.8	6.7	7.5	8.2	9.5	10.6	1.5

NOTES:

1 Linear interpolation may be used.

2 Mortar classification is given in Table 10.1.

TABLE 3.2

COMPRESSIVE STRENGTH FACTOR (k_h)

Ratio of masonry unit height to mortar bed joint thickness	0.0	3.0	7.6	12.0	≥ 19.0
Compressive strength factor (kh)	0.0	0.60	1.00	1.15	1.30

NOTE: Linear interpolation may be used.

3.3.3 Flexural tensile strength

The characteristic flexural tensile strength (f'_{mt}) for unreinforced, reinforced and prestressed masonry shall be zero except under actions resulting from wind, earthquake loads or similar forces of a short-term, transient nature, and where any simultaneous force due to vertical loads (F_d) is not a negative value (i.e. not a net tension force). In these cases the flexural tensile strength shall be taken—

(a) at mortar joints—

(i) for all masonry except special masonry, as a value not greater than 0.20 MPa; and

(ii) for special masonry, as a value obtained from tests in accordance with Appendix D, but not greater than 1 MPa; and

(b) at interfaces with other materials—

(i) where results of tests in accordance with Appendix D are available, a value derived from those tests; and

(ii) in other cases, zero.

Live loads shall not be considered to be of a short-term transient nature.

Accessed by SWINBURNE UNIVERSITY OF TECHNOLOGY on 15 Aug 2007

@Seismicisolation

@Seismicisolation

3.3.4 Shear strength

The characteristic shear strength (f'_{ms}) shall be as follows:

(a) At membrane-type damp-proof courses, flashings, and at the interface with materials other than covered by Clause 3.3.4(d)—zero, or an appropriate value based on the results of tests in accordance with Clause 3.3.1 (see also Clause 7.5).

(b) For shear in the horizontal direction in continuous horizontal mortar joints, for masonry constructed of other than AAC units, a value of 1.25 f'_{mt} but not greater than 0.35 MPa, nor less than 0.15 MPa.

(c) For shear in the vertical direction—

(i) with neither connectors nor masonry header units crossing the shear plane—zero;

(ii) with connectors in accordance with Clause 4.11 intersecting the shear plane—

(A) for mortar joints—1.25 f'_{mt} or 0.35 MPa, whichever is less; or

(B) for thin-bed mortar joints—zero; and

(iii) for masonry in ordinary running bond, or if there are masonry header units in accordance with Clause 4.11 intersecting the shear plane—

(A) for masonry built of other than AAC units—1.2r_h MPa; or

(B) for masonry built with AAC units—0.6r_h MPa

where

r_h = the proportion of the vertical shear plane that is intersected by masonry header units.

(d) At a joint or interface confined by bonded reinforcement normal to the shear plane—0.35 MPa.

3.3.5 Shear factor

The shear factor (k_v), for calculating the frictional component of shear capacity in accordance with Clause 7.5.1 shall be as given in Table 3.3 or substantiated by appropriate tests.

TABLE 3.3

SHEAR FACTOR

Type of masonry	Location	k_v
Clay, concrete or calcium silicate	At mortar bed joints	0.3
AAC	At mortar bed joints	0.12
All	At membrane-type damp-proof courses, flashings and similar locations where the membrane is in contact with the unit, concrete or within the mortar and the damp-proof course membrane is of—	
	(a) bitumen-coated aluminium or embossed polyethylene	0.3
	(b) polyethylene-and-bitumen coated aluminium	0.15
	At interface of masonry with concrete	0.3
	At interface of masonry with steel	0.2
	At other locations	zero

Accessed by SWINBURNE UNIVERSITY OF TECHNOLOGY on 15 Aug 2007

@Seismicisolation

@Seismicisolation

3.3.6 Elastic properties of masonry

Where masonry is assumed to have linear elastic properties and in the absence of test results, design values for elastic moduli shall be as given in Table 3.4.

3.4 TIES AND ACCESSORIES

The classification of wall ties shall be specified. Where appropriate, the strength and stiffness of accessories shall also be specified.

The characteristic strength of Type A veneer wall ties (F_t), shall be not less than the values given in Table 3.5. The characteristic strength of Type A cavity wall ties shall be not less than the values given in Table 3.6.

TABLE 3.4

ELASTIC MODULI FOR MASONRY

Masonry unit type	Mortar classification	Short-term loading E_m	Long-term loading E_L
Clay units with f'_{uc} in the range 5 to 30 MPa	M2 and M3	700 f'_m	450 f'_m
Clay units with f'_{uc} > 30 MPa	M3 and M4	1000 f'_m	660 f'_m
Concrete units with density ≥1800 kg/m^3 and calcium silicate units	M3 and M4	1000 f'_m	500 f'_m
Concrete units with density <1800 kg/m^3	M2 and M3	750 f'_m	500 f'_m
Grouted concrete or clay masonry	Any	1000 f'_c	350 f'_c
AAC	Thin bed	500 f'_m	250 f'_m

NOTE: Mortar classification is given in Table 10.1.

TABLE 3.5

STRENGTH OF TYPE A VENEER TIES

Tie classification	Characteristic strength (F_t) kN	
	Tension	Compression
Light duty	0.20	0.24
Medium duty	0.40	0.48
Heavy duty	1.00	1.20

NOTE: These values are determined from a tie test in accordance with AS 2699.1, interpreted in accordance with Appendix B.

Accessed by SWINBURNE UNIVERSITY OF TECHNOLOGY on 15 Aug 2007

@Seismicisolation

@Seismicisolation

TABLE 3.6

CHARACTERISTIC STRENGTH OF TYPE A CAVITY TIES

Tie classification	Characteristic strength (F_t) kN	
	Tension	Compression
Light duty	0.20	0.24
Medium duty	0.40	0.48
Heavy duty	1.00	1.20

NOTE: These values are determined from a tie test in accordance with AS 2699.1, interpreted in accordance with Appendix B.

3.5 GROUT

The design characteristic compressive strength of grout $\left(f'_{cg}\right)$ shall be the characteristic cylinder strength at 28 days $\left(f'_c\right)$ measured in accordance with the requirements for concrete in AS 3600, but not exceeding $1.3\left(f'_{uc}\right)$ of the masonry units.

3.6 REINFORCEMENT

3.6.1 Strength

The design yield strength of reinforcement (f_{sy}) shall be in accordance with Table 3.7.

TABLE 3.7

STRENGTH AND DUCTILITY OF REINFORCEMENT

Reinforcement		Yield strength (f_{sy}) MPa	Ductility class
Type	Designation grade		
Bar—			
plain to AS 1302	250R (fitments only)	250	N
deformed to AS 1302	250S	250	N
deformed to AS 1302	400Y	400	N
wire, plain or deformed to AS 1303	450W (fitments only)	450	L
Welded wire mesh, plain or deformed to AS 1304	450F	450	L
Bar deformed to AS/NZS 4671	D500L (fitments only)	500	L
	D500N	500	N
Welded wire mesh, plain, deformed and indented to AS/NZS 4671	D500L	500	L
	D500N	500	N

NOTE: Reference should be made to AS/NZS 4671 for explanation to designations applying to 500 MPa steels.

3.6.2 Modulus of elasticity

The modulus of elasticity of reinforcement (E_s), for all stress values not greater than the yield strength (f_{sy}), shall be either—

(a) taken as equal to 200×10^3 MPa; or

(b) determined by test.

Accessed by SWINBURNE UNIVERSITY OF TECHNOLOGY on 15 Aug 2007

@Seismicisolation

@Seismicisolation

3.6.3 Stress-strain curves

The stress-strain curve for reinforcement shall be either—

(a) assumed to be of a form defined by recognized simplified equations; or

(b) determined from suitable test data.

3.7 TENDONS

3.7.1 Strength

The appropriate strength of tendons shall be as follows:

(a) The tensile strength of prestressing tendons (f_p) shall be taken as the minimum tensile strength specified in Table 3.8.

(b) The yield strength of prestressing tendons (f_{py}) shall be—

(i) for wire used in the as-drawn condition ..... $0.75f_p$;

(ii) for stress-relieved wire ..... $0.85f_p$; and

(iii) for all grades of strand and bar tendons ..... $0.85f_p$.

3.7.2 Modulus of elasticity

The modulus of elasticity of prestressing tendons (E_p), shall be either—

(a) taken as—

(i) for stress-relieved wire to AS 1310..... 200×10^3 MPa;

(ii) for stress-relieved steel strand to AS 1311 ..... 195×10^3 MPa; and

(iii) for cold worked high tensile alloy steel bars to AS 1313..... 170×10^3 MPa; or

(b) determined by test.

3.7.3 Stress-strain curves

The stress-strain curve for prestressing tendons shall be determined from appropriate test data.

3.7.4 Other properties

Where other properties of prestressing tendons are required, reference shall be made to AS 3600.

TABLE 3.8

TENSILE STRENGTH OF PRESTRESSING TENDONS

Material type and Standard	Nominal diameter mm	Area mm^2	Minimum breaking load kN	Minimum tensile strength MPa
Wire, AS 1310	5 5 7	19.6 19.6 38.5	30.4 33.3 65.5	1 550 1 700 1 700
7-wire super strand, AS 1311	9.3 12.7 15.2	54.7 100 143	102 184 250	1 860 1 840 1 750
7-wire regular strand, AS 1311	12.7	94.3	165	1 750
Bars, AS 1313 (Super grade only)	23 295 32 38	415 660 804 1140	450 710 870 1230	1 080 1 080 1 080 1 080

Accessed by SWINBURNE UNIVERSITY OF TECHNOLOGY on 15 Aug 2007

@Seismicisolation

@Seismicisolation

SECTION 4 GENERAL DESIGN ASPECTS

4.1 SCOPE OF SECTION

This Section sets out rules for general design aspects for masonry members and structures, including prevention of moisture penetration, joints, bonding and tying, connections, arches and lintels, sills and corbelling. It also provides capacity reduction factors and cross-sectional dimensions and properties.

4.2 MEMBERS OF MIXED CONSTRUCTION

Members of mixed construction shall comply with the following:

(a) A member constructed of more than one type of masonry unit or mortar shall be designed assuming the least favourable combination of unit and mortar type when determining properties for strength and durability.

(b) A member composed of more than one type of masonry system (e.g. unreinforced and reinforced) shall be designed for composite action.

In each case account shall be taken of the different material properties of the parts and the potential for differential movement.

4.3 CHASES, HOLES AND RECESSES

The effect of any chases, holes and recesses required in the masonry shall be taken into account in the design so that the masonry achieves the required performance, e.g. structural, moisture-resistance, fire resistance, insulation and other properties required of the masonry, and the need for it to be site-cut is minimized.

4.4 CAPACITY REDUCTION FACTORS

The value of the capacity reduction factor (ϕ) used to evaluate the strength capacity of a member shall be taken from Table 4.1 as appropriate.

TABLE 4.1

CAPACITY REDUCTION FACTORS

Type of masonry or accessory and action effect	Capacity reduction factor (ϕ)
(a) Unreinforced masonry	
(i) Compression	0.45
(ii) Other actions	0.60
(b) Reinforced and prestressed masonry	0.75
(c) Wall ties, connectors and accessories	
(i) Wall ties in tension or compression	0.95
(ii) Connectors across a joint in masonry	0.75
(iii) Accessories and other actions	0.75

Accessed by SWINBURNE UNIVERSITY OF TECHNOLOGY on 15 Aug 2007

@Seismicisolation

@Seismicisolation

4.5 CROSS-SECTION PROPERTIES

4.5.1 Bedded thickness

The bedded thickness (t_b) of a masonry member for design shall be as follows:

(a) If the mortar bed joints are finished flush or are tooled to a depth not exceeding 3 mm—

t_b = the overall thickness of the masonry member.

(b) If the mortar bed joints are raked—

t_b = the overall thickness of the masonry, less the depth of raking.

The effects of occasional deep raking, such as that required for over-flashing set into mortar joints, shall also be allowed for in the structural design.

4.5.2 Effective width of compression faces and flanges

Provided the outstanding portions of the face or flange are built to act in monolithic structural action with the diaphragm or web, the effective width (b), of each outstanding portion of the compression face or flange of an I, T, L or similar cross-sectional form shall be assumed to extend beyond the face of the connecting diaphragm or web portion by an amount not exceeding the least of—

(a) six times the thickness of the compression face or flange;

(b) half the clear distance to the next adjacent diaphragm or web;

(c) the distance to the structural end of the masonry in the outstanding face or flange;

(d) in a member spanning between lateral supports, 0.10 times the span distance between those supports;

(e) in a shear wall with returns, acting as a cantilever—

(i) where the outstands project from both sides of the web portion of the wall, 0.08 times the total height of the wall above the level being analysed; or

(ii) where the outstand projects from only one side of the web portion of the wall, 0.06 times the total height of the wall above the level being analysed.

For hollow unit reinforced masonry walls in bending, the width of compression face used in design shall be determined in accordance with Clause 8.5.

The effects of any holes or openings in the flange on the effective flange width shall be taken into account.

4.5.3 Structural end of a masonry member

The structural end of a masonry member shall be the vertical surface in the member across which vertical shear cannot be transferred, and shall include—

(a) the actual end or face of the member;

(b) a control joint in the member; and

(c) a vertical mortar joint in the masonry (other than perpend joints in normal running bond), unless that joint is intersected by masonry bonding or tying complying with Clause 4.11 or is otherwise constructed to give the required monolithic structural action.

Accessed by SWINBURNE UNIVERSITY OF TECHNOLOGY on 15 Aug 2007

@Seismicisolation

@Seismicisolation

4.5.4 Bedded area

The bedded area (A_b) for a masonry member shall be the bedded area of the mortar based on the full bed width of the masonry unit, less the depth of any raking.

In hollow unit masonry, the bedded area of the mortar shall be based on the face shell width and shall not include the area of webs in the units.

4.5.5 Combined cross-sectional area

The combined cross-sectional area of a grouted or reinforced masonry member shall be as follows:

(a) *Fully grouted member* The product of the overall width less the depth of raking (if any), and the length.

(b) *Partially grouted member* The product of the overall width less the depth of raking (if any), and the portion of the length represented by the grouted cores, plus the bedded area of the portion of the length represented by the ungrouted cores.

4.5.6 Design cross-sectional area

The design cross-sectional area (A_d) of a member shall be—

(a) for unreinforced masonry—

A_d = the bedded area (A_b) in accordance with Clause 4.5.4; and

(b) for grouted or reinforced masonry—

A_d = the combined cross-sectional area in accordance with Clause 4.5.5.

4.5.7 Grout area

The design cross-sectional area of grout (A_c) in a grouted or reinforced member shall be as follows:

$$A_c = A_d - A_b \qquad \ldots 4.5.7$$

where

A_d = the design cross-sectional area in accordance with Clause 4.5.6

A_b = the bedded area in accordance with Clause 4.5.4.

4.5.8 Section modulus and second moment of area

The section modulus of a cross-section shall be derived from the dimensions of the design cross-sectional area at the nearest mortar joint.

In ungrouted hollow unit masonry, the contributions of the webs of the units may be taken into account for determining the stiffness and deflection of masonry members.

4.5.9 Chases, holes and recesses

The design properties of the member shall take into account any chases, holes and recesses in the member.

4.6 DESIGN FOR ROBUSTNESS

4.6.1 General

Masonry members and their connections shall have an adequate degree of robustness. This requirement shall be deemed to be satisfied if the members are proportioned in accordance with Clause 4.6.2.

Accessed by SWINBURNE UNIVERSITY OF TECHNOLOGY on 15 Aug 2007

@Seismicisolation

@Seismicisolation

4.6.2 Maximum slenderness of masonry members

For robustness, the slenderness of a masonry member shall be as follows:

(a) For isolated piers—

$$\frac{H}{t_r} \le C_v \qquad \text{. . . 4.6.2(1)}$$

(b) For walls spanning vertically—

$$\frac{H}{k_t t_r} \le C_v \qquad \text{. . . 4.6.2(2)}$$

(c) For walls with at least one vertical edge laterally supported and $\frac{L_r}{t_r} \le C_h$—

$$\frac{H}{t_r} = \text{No limit} \qquad \text{. . . 4.6.2(3)}$$

(d) For walls with at least one vertical edge laterally supported and $\frac{L_r}{t_r} > C_h$—

$$\frac{H}{t_r} \le C_v + \frac{C_h}{L_r - C_h t_r} \qquad \text{. . . 4.6.2(4)}$$

where

H = the clear height of a member between horizontal lateral supports, in metres; or

= for a member without top horizontal support, the overall height from the bottom lateral support, in metres

t_r = the minimum thickness of the member, in metres

= in cavity-wall construction, the minimum thickness of the thicker leaf or two-thirds the sum of the thicknesses of the two leaves, whichever is greater, in metres

= in diaphragm wall construction, the overall thickness of the wall, in metres

k_t = a thickness coefficient, values as given in Table 7.2

C_v,C_h = robustness coefficients, values as given in Table 4.2 for edge restraints at top, bottom and vertical sides (either separately or in combination)

L_r = the clear length of a wall between vertical lateral supports; or

= for a wall without a vertical support at one end or at a control joint or for walls containing openings, the length to that unsupported end or control joint or edge of opening

A control joint in a wall, or an edge to an opening in a wall, shall be regarded as an unsupported edge to that wall unless specific measures are taken to provide adequate lateral support at that edge.

The robustness of walls of geometric section can be checked by determining an equivalent thickness of rectangular section from first principles and applying the provisions of this Clause.

Accessed by SWINBURNE UNIVERSITY OF TECHNOLOGY on 15 Aug 2007

@Seismicisolation

@Seismicisolation

4.7 PREVENTION OF MOISTURE PENETRATION

4.7.1 Cavities

In cavity walls and masonry veneer walls, cavities with a minimum width of 40 mm, which are properly detailed and constructed, shall be regarded as being resistant to the passage of moisture from the exposed face through to the inner, unexposed face of the wall.

Where insulating material is placed in a cavity, appropriate measures shall be taken to ensure that the moisture resistance of the wall is maintained.

4.7.2 Weep holes

Weep holes shall be provided wherever it is necessary to drain moisture from or through masonry construction. Where flashings are incorporated in the masonry, weep holes shall be provided in the masonry course immediately above the flashing, at centres not exceeding 1200 mm.

4.7.3 Damp-proof courses and flashings

Damp-proof courses or flashings shall be incorporated into masonry construction where it is necessary—

(a) to provide a barrier to the upward or downward passage of moisture through masonry;

(b) to prevent moisture from entering into the interior of a building from the exterior;

(c) to prevent moisture passing across a cavity to the inner leaf; or

(d) to shed moisture through masonry to the outer face.

Bituminous damp-proof course materials without metal strips shall not be used where the superimposed masonry exceeds either two storeys or 8 m in height.

Sheet material used as a damp-proof course shall be at least 20 mm wider than the thickness of the masonry member in which it is placed and shall project from each face.

Over-flashings shall be set to a depth of at least 15 mm into the masonry.

4.7.4 Single leaf and solid walls

Where the prevention of moisture penetration is required, external single leaf walls and solid walls shall be protected on the outside face by a suitable coating in accordance with AS/NZS 2311.

Accessed by SWINBURNE UNIVERSITY OF TECHNOLOGY on 15 Aug 2007

@Seismicisolation

@Seismicisolation

TABLE 4.2

ROBUSTNESS COEFFICIENTS FOR WALLS AND ISOLATED PIERS

Top and bottom edge restraints to wall panels	C_v	
	Vertically unreinforced	**Vertically reinforced or prestressed**
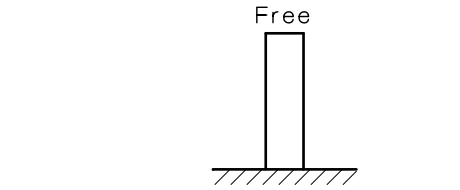	6	12 with reinforcement continuous into support. Otherwise 6
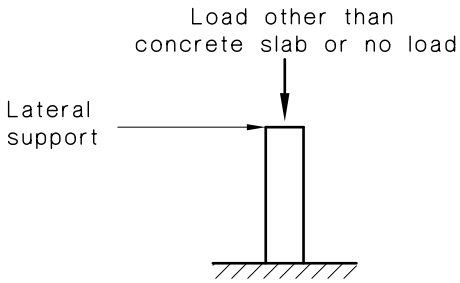	27	36
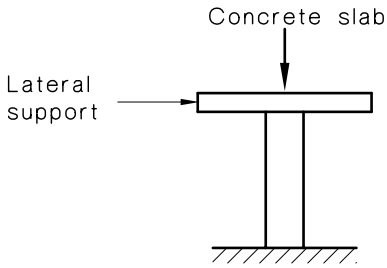	36	48
Isolated piers		
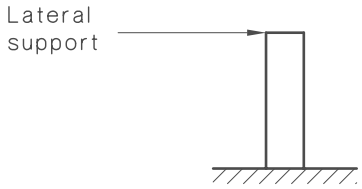	13.5	30
Edge restraints on vertical sides of wall panels	C_h	
	Horizontally unreinforced	**Horizontally reinforced or prestressed**
	12	24 with reinforcement continuous past support. Otherwise 16
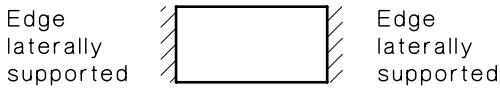	36	48

NOTE: For this Table, reinforcement means complying with the reinforcement requirements of Clause 8.5, and prestressed means complying with the prestressing requirements of Clause 9.5, for bending in the relevant direction.

@Seismicisolation

Accessed by SWINBURNE UNIVERSITY OF TECHNOLOGY on 15 Aug 2007

@Seismicisolation

4.8 CONTROL JOINTS

4.8.1 General

Control joints shall be incorporated in masonry as necessary to control and limit the movements referred to in Clause 2.5.2.2. Where a control joint is incorporated, the masonry shall be considered to include a structural end as defined in Clause 4.5.3.

4.8.2 Detailing

Control joints shall comply with the following:

(a) The spacing of joints shall be such that, at each joint—

(i) the calculated opening movement does not exceed 10 mm; and

(ii) the calculated closing movement does not exceed 15 mm, and the width of each joint remains not less than 5 mm.

(b) Any material used to fill joints shall be of a type that will not inhibit the performance of the joints during the life of the building.

(c) Control joints shall not be in the form of toothing of the masonry unless this toothing is specifically considered in the design.

4.9 MORTAR JOINTS

4.9.1 Thickness

For other than thin-bed mortar, the design thickness of mortar joints, including bed joints and perpends, shall not exceed 10 mm unless the effects of greater thickness on compression and flexural strength are taken into account in the design.

The design thickness of thin-bed mortar joints shall be not less than 2 mm and not greater than 4 mm.

4.9.2 Finishing

With the exception of thin-bed mortar, the surfaces of joints in exposure environments 4(c), 5, 6, 7 and 8, as given in Table 5.1, shall be tooled to give a dense, water-shedding finish.

Joints in walls constructed with hollow unit, ungrouted masonry shall not be raked. In other masonry, the depth of raking, if any, shall be not closer than 5 mm to any perforation in cored unit masonry or 20 mm in hollow unit masonry.

4.10 WALL TIES

Wall ties for cavity walls and masonry veneer walls shall be as follows:

(a) Of Type A and a duty classification appropriate to the structural requirements of the masonry (see Clauses 7.7 and 7.8).

(b) Designed to transfer the appropriate loads.

(c) Embedded at least 50 mm into the mortar joint and, where applicable, into the grout, have at least 15 mm cover from any exposed surface of the joint and be adequately and appropriately attached to the structural backing.

(d) Spaced to comply with the following:

(i) Not greater than 600 mm in each direction.

(ii) Adjacent to lateral supports and control joints, and around openings in the masonry, with the first lines of ties located within 300 mm from the top of the wall, control joint or perimeter of opening.

Accessed by SWINBURNE UNIVERSITY OF TECHNOLOGY on 15 Aug 2007

@Seismicisolation

@Seismicisolation

When a masonry veneer connected to a flexible structural backing is continuous past a horizontal floor support, this edge distance applies to the first row of ties immediately above and below the line of the floor.

NOTE: A row of ties may be in a single bed joint or distributed between up to two adjacent bed joints.

4.11 BONDING, TYING AND SUPPORTING

4.11.1 General

Where monolithic structural action is required across a vertical joint between two masonry members or between two components of a member, the interface shall be intersected by either—

(a) masonry header units that provide engagement across the interface and comply with Clause 4.11.2; or

(b) connectors which tie the two members or components together across the interface and comply with Clause 4.11.3.

The vertical joint at the interface shall be filled with mortar.

4.11.2 Bonding with masonry header units

Masonry header units used to obtain monolithic structural action shall be—

(a) of a masonry material compatible with the masonry in the wall, or detailed so that any incompatibility does not impair the structural integrity of the wall;

(b) spaced—

(i) between the leaves in solid masonry construction—either in header courses at centres of 600 mm or less, in which at least each alternate unit is a header, or with the equivalent number of header units distributed uniformly throughout the wall; and

(ii) at other interfaces—either with at least every fourth course of masonry at the interface fully engaged, or with the equivalent number of header units distributed uniformly throughout the interface area;

(c) properly bonded with each section of the masonry in accordance with the selected bond pattern, and providing engagement of at least 90 mm into the masonry on each side of the interface; and

(d) built in as the work progresses.

4.11.3 Tying with connectors

4.11.3.1 *Other than diaphragm walls and walls of geometric section*

For other than diaphragm walls and walls of geometric section, connectors used at an interface to obtain monolithic structural action shall conform with the following:

(a) Connectors shall have a tensile capacity of 0.4 kN.

NOTE: Medium duty wall ties satisfy this requirement.

(b) Connectors shall be spaced—

(i) between the leaves in solid masonry construction—not more than 400 mm in each direction; and

(ii) at other interfaces—at a horizontal spacing of one connector for each 200 mm width (or part thereof) of the interface area, and at a vertical spacing of 300 mm average and 400 mm maximum between connectors, or at such alternative spacings as can be substantiated by calculation or tests.

Accessed by SWINBURNE UNIVERSITY OF TECHNOLOGY on 15 Aug 2007

@Seismicisolation

@Seismicisolation

(c) Connectors shall be placed in aligning mortar bed joints to tie the masonry members or components together across the interface, and built into the masonry in accordance with Clause 11.4.7.

4.11.3.2 *Diaphragm walls and walls of geometric section*

For diaphragm walls and walls of geometric section, at the engagement of diaphragms with leaves, it shall be permissible to use shear connectors to obtain monolithic action at the interface. The spacing of the connectors shall be as calculated but not greater than 600 mm.

NOTE: The design of shear connectors is given in Clause 7.5.3.

4.11.4 Fixing to supporting structures

Where a load is to be transferred from a masonry member to a supporting structure, this shall be achieved by one of the following methods:

(a) Bedding the masonry on a mortar bed on the supporting structure, with or without a damp-proof course.

(b) Provision of bonded reinforcement normal to the joint between the masonry member and the support.

(c) Provision of column ties or head ties of sufficient strength and stiffness at spacings capable of transferring the calculated loads.

The shear transfer capacity as determined in accordance with Clause 7.5 or 8.6, as appropriate, shall be greater than the magnitude of the loads to be transferred to the supporting structure determined in accordance with Clause 2.6.

4.12 ARCHES AND LINTELS

Unreinforced masonry over openings shall be supported by arches, lintels or frames. End bearings of lintels on each side of an opening shall be not less than 100 mm in length. Arches shall have sufficient rise to carry the loads and shall be provided with buttresses capable of taking the horizontal thrust from the arch.

4.13 INTERACTION BETWEEN MASONRY MEMBERS AND SLABS, BEAMS OR COLUMNS

Where a masonry member and associated slabs, beams or columns are designed for composite action, the magnitude of the stresses likely to occur as a result of the composite action shall be assessed and taken into account in the design.

Where a masonry member and associated slabs, beams or columns are not designed for composite action, regions of compressive stress concentrations shall be designed in accordance with the requirements of Clause 7.3.5 for concentrated loads.

4.14 CORBELLING

4.14.1 Corbels normal to the plane of the wall

Corbels normal to the plane of the wall shall be constructed using solid masonry units. The maximum projection of the corbel beyond the face of the wall shall be not more than one half the wall thickness.

The maximum projection of any one unit shall not exceed the lesser of one third of the unit dimension measured in the direction of the corbel or one half of the height of the unit.

For cavity walls, the wall thickness shall be taken as the thickness of the leaf being corbelled. The wall, including the corbel, shall satisfy the structural design requirements of this Standard.

Accessed by SWINBURNE UNIVERSITY OF TECHNOLOGY on 15 Aug 2007

@Seismicisolation

@Seismicisolation

4.14.2 Corbels in the plane of the wall

Corbels in the plane of the wall shall be designed to satisfy the structural design requirements of this Standard.

4.15 ATTACHMENT TO FACE OF WALLS

Where timber floors or roofs are to be supported by a wall plate, or similar, attached to the face of the wall, sufficient anchors shall be provided at spacings not exceeding 600 mm to transfer the vertical shear into the wall.

Accessed by SWINBURNE UNIVERSITY OF TECHNOLOGY on 15 Aug 2007

@Seismicisolation

@Seismicisolation

SECTION 5 DESIGN FOR DURABILITY

5.1 SCOPE OF SECTION

This Section sets out the methods for the design of masonry for durability.

The performance requirements for durability are set out in Clause 2.3.1. Masonry designed in accordance with the methods set out in this Section is deemed to satisfy those performance requirements.

5.2 EXPOSURE ENVIRONMENTS

5.2.1 Mild environment

Environments remote from the coast, industrial activity and the tropics as described in Paragraph E2 of Appendix E shall be regarded as mild environments.

5.2.2 Exterior environment

The exposed leaf of an external cavity or masonry veneer wall and the cavity space shall both be regarded as being in an exterior environment.

5.2.3 Interior environment

All internal leaves including the internal leaf of a cavity wall shall be regarded as an interior environment.

5.2.4 Marine environment

100 m to 1 km for a non-surf coast and 1 km to 10 km for surf coast shall both be regarded as marine environment. The distances specified are from the mean high-water mark.

5.2.5 Severe marine environment

Up to 100 m for a non-surf coast and up to 1 km from a surf coast shall both be regarded as severe marine environment. The distances specified are from the mean high-water mark.

5.3 MASONRY UNITS

Masonry units shall be of at least the salt attack resistance grade given in Table 5.1.

The means for demonstrating compliance with the required grade are as given in AS/NZS 4456.10.

5.4 MORTAR

Mortar shall comply with the minimum classification requirements given in Table 5.1 (see Note 1).

Where sulfate attack from ground water is possible, Type SR cement shall be used (see Note 2).

NOTES:

1 Means of satisfying the classifications for durability are given in Clause 10.4.3.

2 Type SR cement may be either a blended or Portland cement.

5.5 BUILT-IN COMPONENTS

Built-in components for masonry construction, including (but not limited to) wall ties, masonry anchors, connectors, shelf angles, lintel bars, bed joint mesh, bolts and fixings shall comply with the durability classifications given in Table 5.1. Means of satisfying

Accessed by SWINBURNE UNIVERSITY OF TECHNOLOGY on 15 Aug 2007

@Seismicisolation

@Seismicisolation

these classifications are given in Appendix F as appropriate. For situations not covered in Table 5.1, built-in components shall either—

(a) have a demonstrated satisfactory service history in similar situations when used with similar masonry; or

(b) when tested under an appropriate testing regime, not have any predicted loss in serviceability or performance over the intended life.

5.6 GROUT

Where grout is required to provide protection to reinforcement, tendons or other steel items, it shall have a cement content of not less than 300 kg/m^3.

NOTE: Additional requirements for grout are given in Clause 10.7.

5.7 REINFORCEMENT AND TENDONS

5.7.1 General

Reinforcement and tendons shall have the durability classification given in Table 5.1.

The detailing of the reinforcement in masonry shall comply with the appropriate requirements in AS 3600, except as specifically modified in this Clause (5.7).

The amount and disposition of reinforcement and the clear distance between parallel bars shall ensure that the grout can be placed and compacted to completely fill the area to be grouted and provide the required bond and protection to the reinforcement.

Reinforcement in the form of bundled bars, bent-up bars and reinforcing fabric shall not be used without checking that the reinforcement can be properly placed and the grout fully compacted.

5.7.2 Reinforcement and tendons in grouted cavities and cores

Where grout is required to provide protection to steel reinforcement and tendons in grouted cavities and cores, the steel shall be surrounded by grout complying with Clauses 5.6 and 10.7 to provide a cover, measured from the face of the grout to the surface of the reinforcement or tendon in accordance with Table 5.1. Horizontal reinforcement in reinforced hollow unit masonry may be supported on the webs of recessed-web hollow units, provided that the reinforcement is completely surrounded by grout except where it is in contact with the masonry units.

Where recessed web flush-ended hollow blocks are used, the reinforcement shall be supported clear of the webs to permit the covers required by Table 5.1 to be achieved at all positions along the reinforcement including within perpend joints.

5.7.3 Reinforcement and tendons embedded in mortar joints

Reinforcement and tendons (including ducts) placed in mortar joints, including bed joints shall—

(a) have an overall diameter or thickness not more than two-thirds the design thickness of the mortar joint;

(b) have at least 15 mm cover to any exposed surface of the mortar joint; and

(c) be suitably protected to provide a durability classification as required by Table 5.1.

5.7.4 Unbonded tendons in cavities and cores

Unbonded tendons in cavities and cores shall be suitably coated or protected to produce a durability classification as required by Table 5.1.

Accessed by SWINBURNE UNIVERSITY OF TECHNOLOGY on 15 Aug 2007

@Seismicisolation

@Seismicisolation

TABLE 5.1

DURABILITY REQUIREMENTS

Exposure environment	Masonry units: Minimum salt attack resistance grade (see Note 1)	Mortar: Minimum classification	Minimum durability classification of built-in components (see Notes 2 and 3)	Minimum cover to reinforcement and tendons in grouted cavities or cores (mm) (see Clause 5.7.2 and Note 4)
1 Elements in mild environments (see Clause 5.2.1)	Protected	M2	R0	5
2 Elements in interior environments that are—				
(a) above a damp-proof course and enclosed within a building except during construction	Protected	M2	R1	5
(b) subject to non-saline wetting and drying	General purpose	M3	R3	15
(c) subject to saline wetting and drying	Exposure	M4	R4	20
3 Elements above the damp-proof course in non-marine exterior environments. Elements above the damp-proof course in other exterior environments, with a waterproof coating, properly flashed junctions with other building elements and a top covering (roof or coping) protecting the masonry	Protected	M2	R1	5
4 Elements below the damp-proof course or in contact with the ground that are—				
(a) protected from water ingress by an impermeable membrane	Protected	M2	R2	5
(b) in non-aggressive soils	General purpose	M3	R3	15
(c) in aggressive soils	Exposure	M4	R4	20
5 Elements in marine environments (see Clause 5.2.4)	General purpose	M3	R3	15
6 Elements in severe marine environments (see Clause 5.2.5)	Exposure	M4	R4	30
7 Elements in—				
(a) freshwater	General purpose	M3	R3	20
(b) saline or contaminated water including tidal and splash zones	Exposure	M4	R5	30
8 Elements in especially aggressive environments, e.g. subject to attack by corrosive liquids or gases	Exposure	M4	R5	30
9 Elements in especially aggressive environments, e.g. subject to attack by corrosive liquids or gases	*	*	*	*

* Units, mortars, covers or coatings shown by test, or known by experience, to be resistant to the particular corrosive liquid or gas.

Accessed by SWINBURNE UNIVERSITY OF TECHNOLOGY on 15 Aug 2007

@Seismicisolation

@Seismicisolation

NOTES:

1 Durability grades for masonry units are defined in AS/NZS 4456.10.

2 Durability classification of built-in components is defined in AS 2699.1, AS 2699.2 and AS 2699.3.

3 Classification includes reinforcement and tendons embedded in mortar joints and unbonded tendons in cavities and cores.

4 Refer to Clause 10.7.2.5 for further limits on cover, related to nominal aggregate size.

Accessed by SWINBURNE UNIVERSITY OF TECHNOLOGY on 15 Aug 2007

@Seismicisolation

@Seismicisolation

SECTION 7 STRUCTURAL DESIGN OF UNREINFORCED MASONRY

7.1 SCOPE OF SECTION

This Section sets out particular requirements for the structural design of unreinforced masonry for the strength and serviceability limit states. These requirements are in addition to the general requirements of Section 4.

Masonry, contains reinforcement that does not comply with the structural design requirements of Section 8 for strength assessment purposes, shall be regarded as unreinforced masonry, and shall be in accordance with the requirements of this Section.

7.2 GENERAL BASIS OF DESIGN

Each unreinforced masonry member shall be designed to comply with Clauses 7.3 to 7.5, as appropriate, taking into account the strength of the material and the further provisions in Clauses 7.6 to 7.9, as applicable, for the relevant type of member.

The value of the design bending moment shall include the bending moments, if any, resulting from load eccentricities or bending moments applied at the ends of the member.

For a member to be designed to comply with Clause 7.4, the loads and forces on the wall shall be such that—

(a) any bending moments acting on the wall, other than those arising from the laterally applied loads, are small enough to be ignored; and

(b) the compressive stresses on any bed joint in the wall from any simultaneously acting loads do not exceed 3 f'_{mt} in magnitude.

In addition, the member shall be designed to comply with Clause 7.3 for all forces and moments other than those resulting from short-term out-of-plane loads.

7.3 DESIGN FOR MEMBERS IN COMPRESSION

7.3.1 General

Unreinforced masonry members resisting compressive forces, with or without simultaneously acting bending moments, shall be designed to comply with Clause 7.3.3 or Clause 7.3.4. Members with concentrated loads shall be designed to comply with Clause 7.3.5, and lightly loaded members under the action of transient out-of-plane forces shall be designed to comply with Clause 7.4.

The compressive capacity of a masonry member depends upon the following factors:

(a) Slenderness.

(b) Effective eccentricity of loading at each end.

(c) Characteristic compressive strength of the masonry.

(d) Cross-sectional area of the masonry.

In a wall or isolated pier subject to compression and bending, the vertical and bending forces shall be considered at top and bottom of the member by regarding the vertical force as acting at statically equivalent effective eccentricities, (e_1) and (e_2) respectively, at each end. In this calculation, the most unfavourable disposition of live loads shall be considered. These conditions shall be deemed to be satisfied if the provisions of Clause 7.3.3 or 7.3.4 are applied.

Accessed by SWINBURNE UNIVERSITY OF TECHNOLOGY on 15 Aug 2007

@Seismicisolation

@Seismicisolation

Although it is assumed in cavity wall construction that each leaf can give support to the other leaf for robustness purposes (see Clause 4.6) or for withstanding lateral loads (see Clause 7.8.3), no such mutual support shall be assumed or relied upon with respect to buckling actions under compressive forces.

7.3.2 Basic compressive capacity

The basic compressive capacity of the cross-section (F_o) shall be taken as follows:

(a) For ungrouted masonry—

$$F_o = \phi f'_m A_b \qquad \ldots 7.3.2(1)$$

(b) For grouted masonry—

(i) if no testing is done—

$$F_o = \phi \left(f'_m A_b + k_c \sqrt{\left(\frac{f'_{cg}}{1.3} \right)} A_c \right) \qquad \ldots 7.3.2(2)$$

(ii) if testing is done—

$$F_o = \phi f'_{mg} A_d \qquad \ldots 7.3.2(3)$$

where

ϕ = the capacity reduction factor (see Clause 4.4)

f'_m = the characteristic compressive strength of the masonry (see Clause 3.3.2)

A_b = the bedded area of a masonry cross-section (see Clause 4.5.4)

k_c = a strength factor for grout in compression

= 1.4 for hollow concrete masonry units of density greater than 2000 kg/m^3

= 1.2 for all other masonry

f'_{cg} = the design characteristic compressive strength of grout in megapascals (see Clause 3.5)

A_c = the design cross-sectional area of grout (see Clause 4.5.7)

f'_{mg} = the characteristic compressive strength of grouted masonry specimens manufactured and tested in accordance with Appendix C and determined in accordance with Appendix B

A_d = the design cross-sectional area of the member (see Clause 4.5.6).

7.3.3 Design by simple rules

7.3.3.1 *General*

Clauses 7.3.3.1 to 7.3.3.3 apply to unreinforced masonry walls with or without engaged piers, and to isolated piers of rectangular cross-section. The possibility of buckling about each of the two principal axes of the cross-section of the member shall be assessed.

The resistance to lateral loading shall be checked independently, in accordance with Clause 7.4. It is not necessary to consider the interaction of vertical and lateral loads acting simultaneously.

If the member under consideration has insufficient capacity under the simplified rules, its capacity may be determined under refined calculations as specified in Clause 7.3.4.

Accessed by SWINBURNE UNIVERSITY OF TECHNOLOGY on 15 Aug 2007

@Seismicisolation

@Seismicisolation

7.3.3.2 *Compression on uniform symmetrical members*

A member shall be designed such that the following relationship is satisfied:

$$F_d \leq k F_o \qquad \ldots 7.3.3.2$$

where

F_d = the design compressive force which acts on the cross-section of member simultaneously with a bending moment, shear force or other load action

F_o = the basic compressive strength capacity (see Clause 7.3.2)

k = a reduction factor for slenderness and eccentricity given as follows

(a) For a wall or pier supporting a concrete slab as defined in Table 7.1, k is the lesser of—

(i) $0.67 - 0.02(S_{rs} - 14)$; or

(ii) 0.67

(b) For a wall or pier supporting other systems as defined in Table 7.1, k is the lesser of—

(i) $0.67 - 0.025(S_{rs} - 10)$; or

(ii) 0.67

(c) For a wall with the load applied to the face as defined in Table 7.1, k is the lesser of—

(i) $0.067 - 0.002(S_{rs} - 14)$; or

(ii) 0.067

The following requirements shall apply:

(A) For masonry not reinforced for vertical bending, the wall shall extend at least one storey above the point of load application.

(B) For single leaf walls, the minimum thickness shall be 140 mm.

(C) For cavity walls, the thickness of the loaded leaf shall be not less than 100 mm and the sum of the thicknesses of the two leaves not less than 200 mm. (Since the floor line is a line of lateral support, cavity wall ties in this region shall be at 300 mm centres maximum).

(D) If a load is applied to both faces, the wall shall be designed for the difference between the two loads.

In Items (a)(i), (b)(i) and (c)(i), S_{rs} is the simplified slenderness ratio determined in accordance with Clause 7.3.3.3.

The values of k given in Table 7.1 shall be deemed to satisfy the equations in this Clause. In all cases the capacity of the wall shall be checked for the total load on the wall at any level.

Where the load is applied directly on to an engaged pier, the capacity of the pier shall be determined in accordance with Clauses 7.3.4 and 7.3.5, as appropriate.

Accessed by SWINBURNE UNIVERSITY OF TECHNOLOGY on 15 Aug 2007

@Seismicisolation

@Seismicisolation

7.3.3.3 *Slenderness ratio*

The slenderness ratio of a member about a given principal axis shall be as follows:

(a) Other than for a wall that is laterally supported along one or both of its vertical edges—

$$S_{rs} = \frac{a_v H}{k_t t} \qquad \text{. . . 7.3.3.3(1)}$$

(b) For a wall that is laterally supported along one or both of its vertical edges, the lesser of—

$$S_{rs} = \frac{a_v H}{k_t t}\text{; or} \qquad \text{. . . 7.3.3.3(2)}$$

$$S_{rs} = \frac{0.7}{t}\sqrt{a_v H a_h L} \qquad \text{. . . 7.3.3.3(3)}$$

where

S_{rs} = the simplified slenderness ratio

a_v = a slenderness coefficient

= 1 if the member is laterally supported along its top edge

= 2.5 if the member is not laterally supported along its top edge

H = the clear height of a member between horizontal lateral supports; or

= for a member without top horizontal support, the overall height from the bottom lateral support

k_t = a thickness coefficient derived from Table 7.2

= 1 if there are no engaged piers

If the engagement of a pier to the wall does not meet the requirements of Clause 4.11 for bonding or tying, the value of k_t shall be taken as 1.0

a_h = a slenderness coefficient

= 1 if the member is laterally supported along both its vertical edges

= 2.5 if the member is laterally supported along one vertical edge

L = the clear length of a wall between vertical lateral supports; or

= for a wall without a vertical support at one end or at a control joint or for walls containing openings, the length to that unsupported end or control joint or edge of opening

A control joint in a wall, or an edge to an support at that edge opening in a wall, shall be regarded as an unsupported edge to that wall unless specific measures are taken to provide adequate lateral support at that edge.

t = the overall thickness of the member's cross-section perpendicular to the principal axis under consideration; for members of cavity wall construction, each leaf is assessed separately and individually for thickness and for slenderness ratio

t_{wp} = the overall thickness of a masonry wall plus an engaged pier or buttress

Accessed by SWINBURNE UNIVERSITY OF TECHNOLOGY on 15 Aug 2007

@Seismicisolation

@Seismicisolation

7.3.4 Design by refined calculation

7.3.4.1 *General*

Clauses 7.3.4.1 to 7.3.4.5 apply to unreinforced masonry walls with or without engaged piers, and to isolated piers. The possibility of buckling about each of the two principal axes of the cross-section of the member shall be assessed.

The provisions of this Clause are for uniform symmetrical members in uniaxial bending and compression. Other cases may be designed using the same general principles with appropriate modification based on the principles of structural mechanics.

7.3.4.2 *Uniaxial bending and compression on uniform symmetrical members*

A member shall be designed such that the following relationship is satisfied:

$$F_d \leq kF_o \qquad \ldots 7.3.4.2$$

where

F_d = the design compressive force that acts on the cross-section of a member simultaneously with a bending moment, shear force or other load action

k = a reduction factor for slenderness and eccentricity (see Clause 7.3.4.5)

F_o = the basic compressive strength capacity (see Clause 7.3.2).

Accessed by SWINBURNE UNIVERSITY OF TECHNOLOGY on 15 Aug 2007

@Seismicisolation

@Seismicisolation

TABLE 7.1

REDUCTION FACTOR (*k*) FOR DESIGN BY SIMPLE RULES

S_{rs}	Reduction factor (*k*)		
	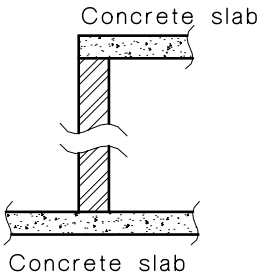	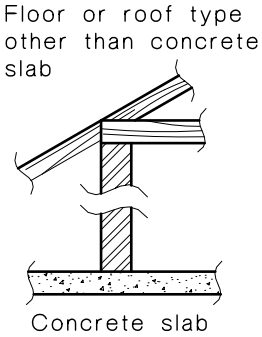	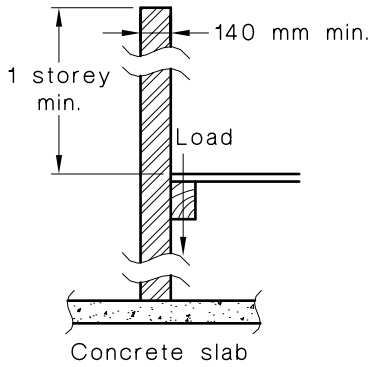
≤8	0.67	0.67	0.067
10	0.67	0.67	0.067
12	0.67	0.63	0.067
14	0.67	0.58	0.067
16	0.63	0.53	0.063
18	0.59	0.48	0.059
20	0.55	0.43	0.055
22	0.51	0.38	0.051
24	0.47	0.33	0.047
26	0.43	0.28	0.043
28	0.39	0.23	0.039
30	0.35	0.18	0.035
32	0.31	0.13	0.031
34	0.27	0.08	0.027
36	0.23	0.03	0.023

NOTES:

1 Linear interpolation within each category is permitted.

2 This Table does not cover the case of load applied to one face of the wall at roof level. Because of the low precompression at this level, a detail that minimizes the load eccentricity should be used.

Accessed by SWINBURNE UNIVERSITY OF TECHNOLOGY on 15 Aug 2007

@Seismicisolation

@Seismicisolation

TABLE 7.2

THICKNESS COEFFICIENTS (k_t) FOR WALLS STIFFENED BY MONOLITHICALLY ENGAGED PIERS

Pier spacing/pier width (see Note 1)	Thickness coefficient (k_t)		
	Pier thickness ratio (t_{wp}/t)		
	1	2	3
6	1.0	1.4	2.0
8	1.0	1.3	1.7
10	1.0	1.2	1.4
15	1.0	1.1	1.2
20 or more	1.0	1.0	1.0

NOTES:

1 Pier spacing is taken as the distance between centre-lines of piers.

2 Linear interpolation may be used.

7.3.4.3 *Slenderness ratio*

The slenderness ratio of a member about a given principal axis shall be as follows:

(a) Other than for a wall that is laterally supported along one or both of its vertical edges—

$$S_r = \frac{a_v H}{k_t t} \qquad \text{. . . 7.3.4.3(1)}$$

(b) for a wall that is laterally supported along one or both of its vertical edges, the lesser of—

$$S_r = \frac{a_v H}{k_t t}\text{; or} \qquad \text{. . . 7.3.4.3(2)}$$

$$S_r = \frac{0.7}{t}\sqrt{a_v H a_h L} \qquad \text{. . . 7.3.4.3(3)}$$

where

S_r = The slenderness ratio

a_v = A slenderness coefficient

= 0.75 for a member laterally supported and partially rotationally restrained at both top and bottom

= 0.85 for a member laterally supported at top and bottom and partially rotationally restrained at one of them

= 1.0 for a member laterally supported at both top and bottom

= 1.5 for a member laterally supported and partially rotationally restrained at the bottom and partially laterally supported at the top

= 2.5 for a freestanding wall

the situations shown and described in Figures 7.1 to 7.5 shall be deemed to provide the appropriate values.

H = The clear height of a member between horizontal lateral supports; or

= for a member without top horizontal support, the overall height from the bottom lateral support

Accessed by SWINBURNE UNIVERSITY OF TECHNOLOGY on 15 Aug 2007

@Seismicisolation

@Seismicisolation

k_t = a thickness coefficient derived from Table 7.2

if the engagement of a pier to the wall does not meet the requirements of Clause 4.11 for bonding or tying, the value of k_t shall be taken as 1.0.

t = the overall thickness of the member's cross-section perpendicular to the principal axis under consideration; for members of cavity wall construction, each leaf is assessed separately and individually for thickness and for slenderness ratio

a_h = a slenderness coefficient

= 1.0 for a member laterally supported along both vertical edges (regardless of the rotational restraint along these edges); or

= 2.5 for a member laterally supported along one vertical edge, and unsupported along its other vertical edge

the situations shown and described in Figure 7.6 are deemed to provide the appropriate values.

L = the clear length of a wall between vertical lateral supports; or

= for a wall without a vertical support at its end or at a control joint, the length to that unsupported end or control joint.

A member shall not be regarded as being laterally supported at an edge unless that lateral support meets the requirements of Clause 2.6.3 in the direction perpendicular to the principal axis under consideration.

A control joint in a wall, or an edge to an opening in a wall, shall be regarded as an unsupported edge to that wall unless specific measures are taken to provide adequate lateral support at that edge.

Where an engaged pier or buttress is of such dimension that t_{wp} exceeds 0.25 H in value, it shall be designed as a member providing lateral support to the wall, and shall not then be used in evaluating k_t.

Where a wall contains openings, the assessment of the slenderness ratio shall take account of the extent and position of openings in relation to applied loads and support conditions, with each side of the opening being considered to be an unsupported vertical edge.

Where the openings are such that the masonry between any two consecutive openings is by definition an isolated pier, the slenderness ratio of that isolated pier shall be taken as the lesser of the following:

(i) $$S_r = \frac{2H_1}{t} \qquad \ldots 7.3.4.3(4)$$

where

S_r = the slenderness ratio

H_1 = the height of the taller opening

t = the overall thickness or depth of the member's cross-section perpendicular to the principal axis under consideration; for members of cavity wall construction, each leaf is assessed separately and individually for thickness and for slenderness ratio

(ii) The value for the pier assessed in accordance with this Clause.

Accessed by SWINBURNE UNIVERSITY OF TECHNOLOGY on 15 Aug 2007

@Seismicisolation

@Seismicisolation

7.3.4.4 *Effective eccentricity*

The effective load eccentricity shall be determined taking into account the relative stiffness of the masonry members (or member) and floor slabs or beams that the masonry supports, the relative rotation of the slab or beams and the supporting masonry member and any other factors that affect the interaction of the components framing into the joint.

This requirement shall be deemed to be satisfied if the effective eccentricity is calculated assuming that the load transmitted to a wall by a single floor or roof acts at one third of the depth of the bearing area from the loaded face of the wall or loadbearing leaf. Where a supported floor or roof is continuous over a wall, each side of the floor or roof shall be taken as being individually supported on one half of the total bearing area. The resulting eccentricity of load at any level shall be calculated on the assumption that the total vertical load on the wall above the plane under consideration is axial immediately above the horizontal plane under consideration.

Alternatively, for walls with a (minimum) design compressive stress immediately above the joint under consideration greater than 0.25 MPa, a rigid frame analysis may be used with the appropriate allowance for relative slab wall rotation at the joints.

7.3.4.5 *Reduction factor for slenderness and eccentricity for refined calculation*

The reduction factor (k) shall be the lesser of the values calculated in Items (a) and (b), as follows:

(a) For lateral instability—

(i) for e_1/t_w 0.05—

$$k = 1.18 - 0.03\,S_r \qquad \text{. . . 7.3.4.5(1)}$$

but not greater than one.

(ii) for $e_1/t_w > 0.05$—

$$k = 0.5\left(1+\frac{e_2}{e_1}\right)\left[\left(1-2.083\frac{e_1}{t_w}\right)-\left(0.025-0.037\frac{e_1}{t_w}\right)(1.33S_r-8)\right] + 0.5\left(1-0.6\frac{e_1}{t_w}\right)\left(1-\frac{e_2}{e_1}\right)(1.18-0.03S_r) \qquad \text{. . . 7.3.4.5(2)}$$

Where the slenderness ratio (S_r) has been assessed in accordance with Clause 7.3.4.3(b), k is evaluated on the assumption that $e_2/e_1 = 1$.

The values given in Table 7.3 shall be deemed to satisfy Equations 7.3.4.5(1) and 7.3.4.5(2).

(b) For local crushing, a value of k given as follows:

(i) For members of solid cross-section with full bedding or walls fully grouted—

$$k = 1 - 2\frac{e_1}{t_w} \qquad \text{. . . 7.3.4.5(3)}$$

(ii) For members with face shell bedding or a diaphragm wall, the lesser of—

$$k = \frac{1-\dfrac{t_{fs}}{t_w}}{1-\dfrac{t_{fs}}{t_w}+2\dfrac{e_1}{t_w}} \qquad \text{. . . 7.3.4.5(4)}$$

and

@Seismicisolation

Accessed by SWINBURNE UNIVERSITY OF TECHNOLOGY on 15 Aug 2007

@Seismicisolation

$$k = \frac{1}{2\frac{t_{fs}}{t_w}}\left(1 - 2\frac{e_1}{t_w}\right) \qquad \ldots 7.3.4.5(5)$$

where

e_1 = the larger eccentricity of the vertical force, at either top or bottom of the member

e_2 = the smaller eccentricity of the vertical force at the other end and is negative when the eccentricities are on opposite sides of the member

t_w = the overall thickness of wall or isolated pier

t_{fs} = the thickness of the face shell for hollow block masonry or flange thickness for diaphragm walls.

NOTE: Concrete floor systems spanning from one side only shall bear on at least of the thickness of the supporting wall or leaf and the bearing width shall be not less than 85 mm.

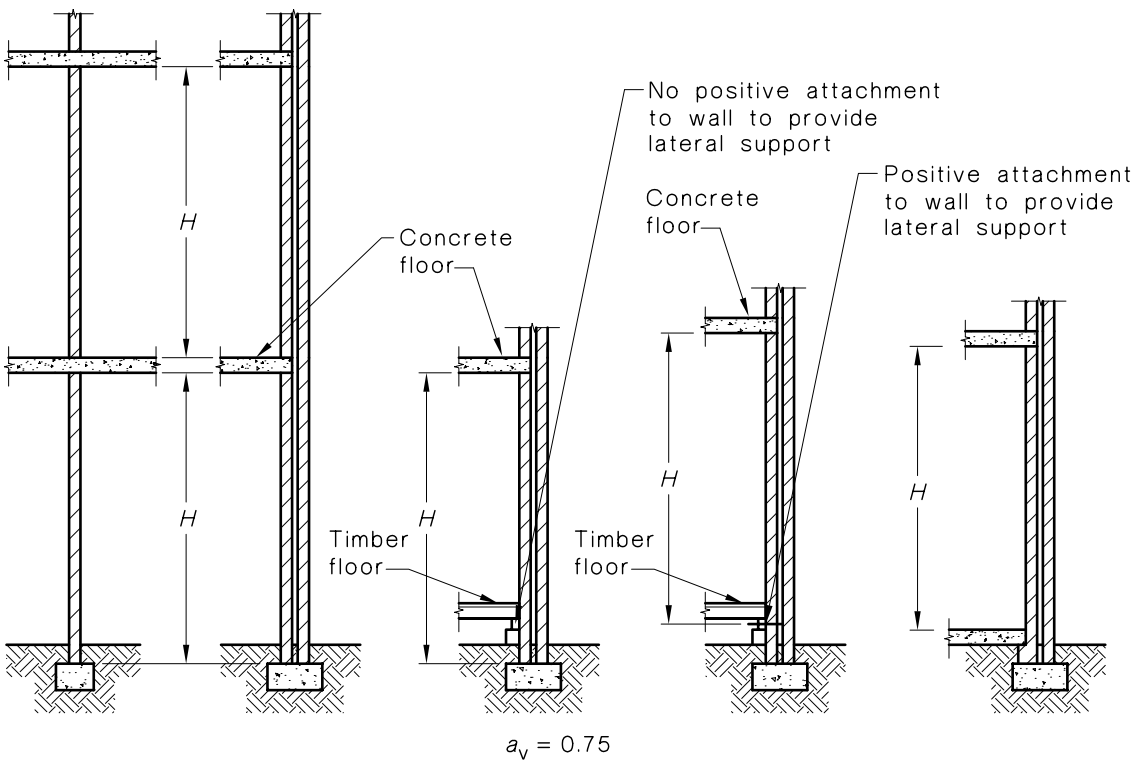

FIGURE 7.1 LATERAL SUPPORT AND PARTIAL ROTATIONAL RESTRAINT AT TOP AND BOTTOM (FULLY BRACED CONSTRUCTION)

Accessed by SWINBURNE UNIVERSITY OF TECHNOLOGY on 15 Aug 2007

@Seismicisolation

@Seismicisolation

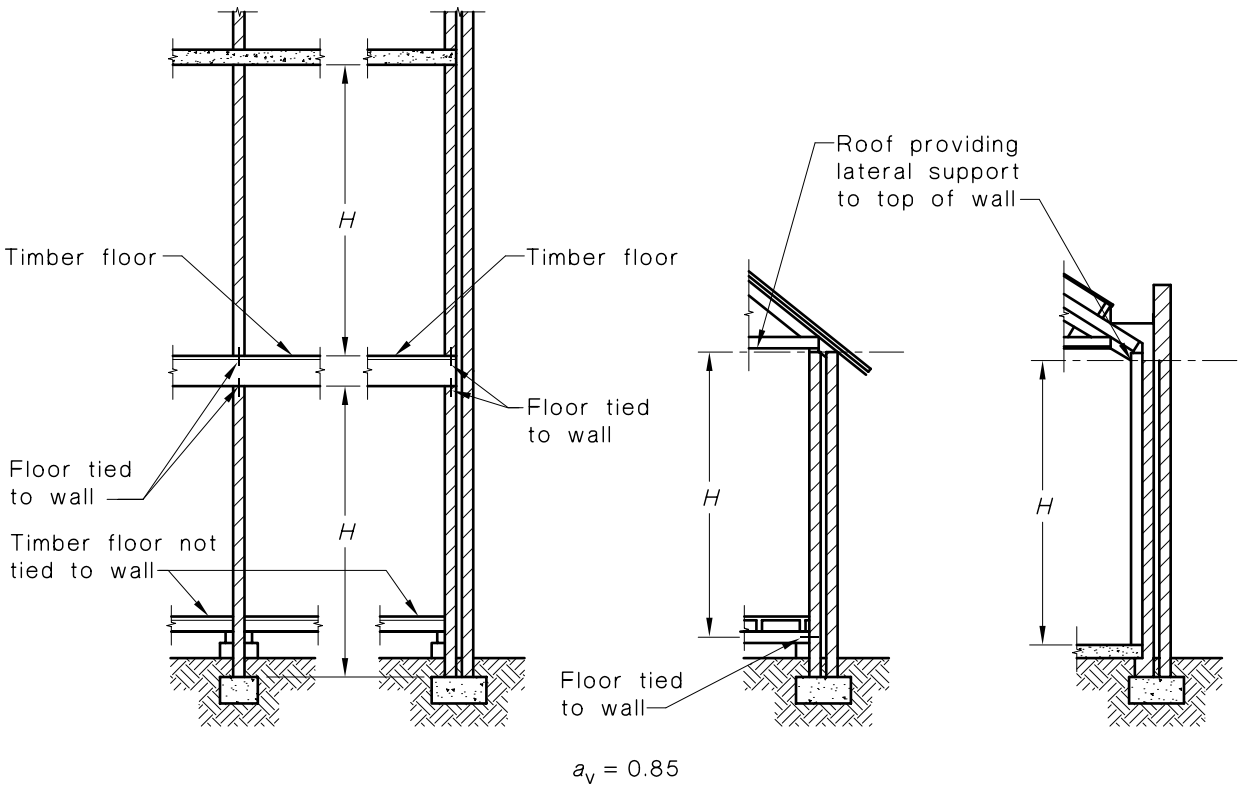

FIGURE 7.2 LATERAL SUPPORT AT TOP AND BOTTOM AND PARTIAL ROTATIONAL RESTRAINT AT ONE END (FULLY BRACED CONSTRUCTION)

Accessed by SWINBURNE UNIVERSITY OF TECHNOLOGY on 15 Aug 2007

@Seismicisolation

@Seismicisolation

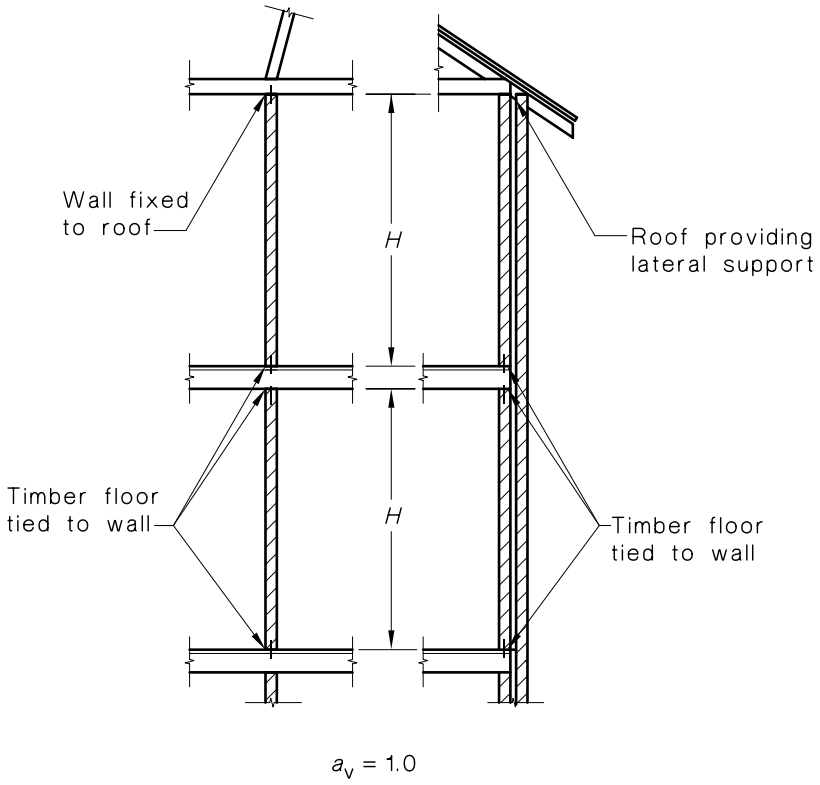

FIGURE 7.3 LATERAL SUPPORT AT TOP AND BOTTOM
(FULLY BRACED CONSTRUCTION)

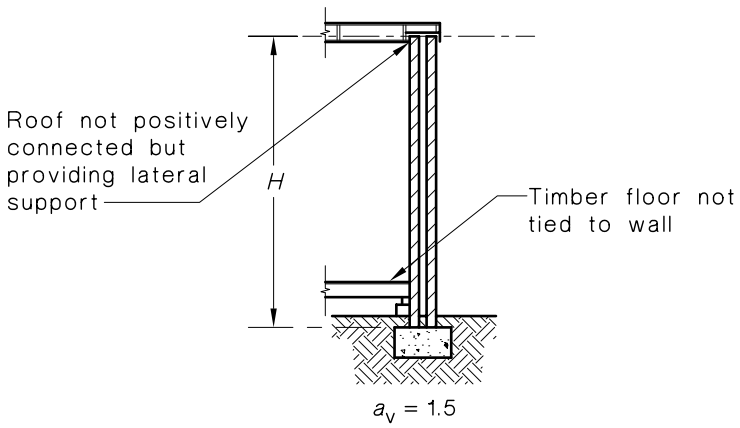

FIGURE 7.4 LATERAL SUPPORT AND PARTIAL ROTATIONAL RESTRAINT AT THE
BOTTOM AND PARTIAL LATERAL SUPPORT AT THE TOP

Accessed by SWINBURNE UNIVERSITY OF TECHNOLOGY on 15 Aug 2007

@Seismicisolation

@Seismicisolation

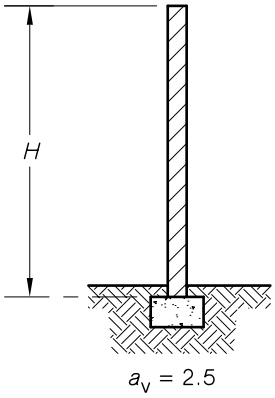

FIGURE 7.5 FREE AT THE TOP

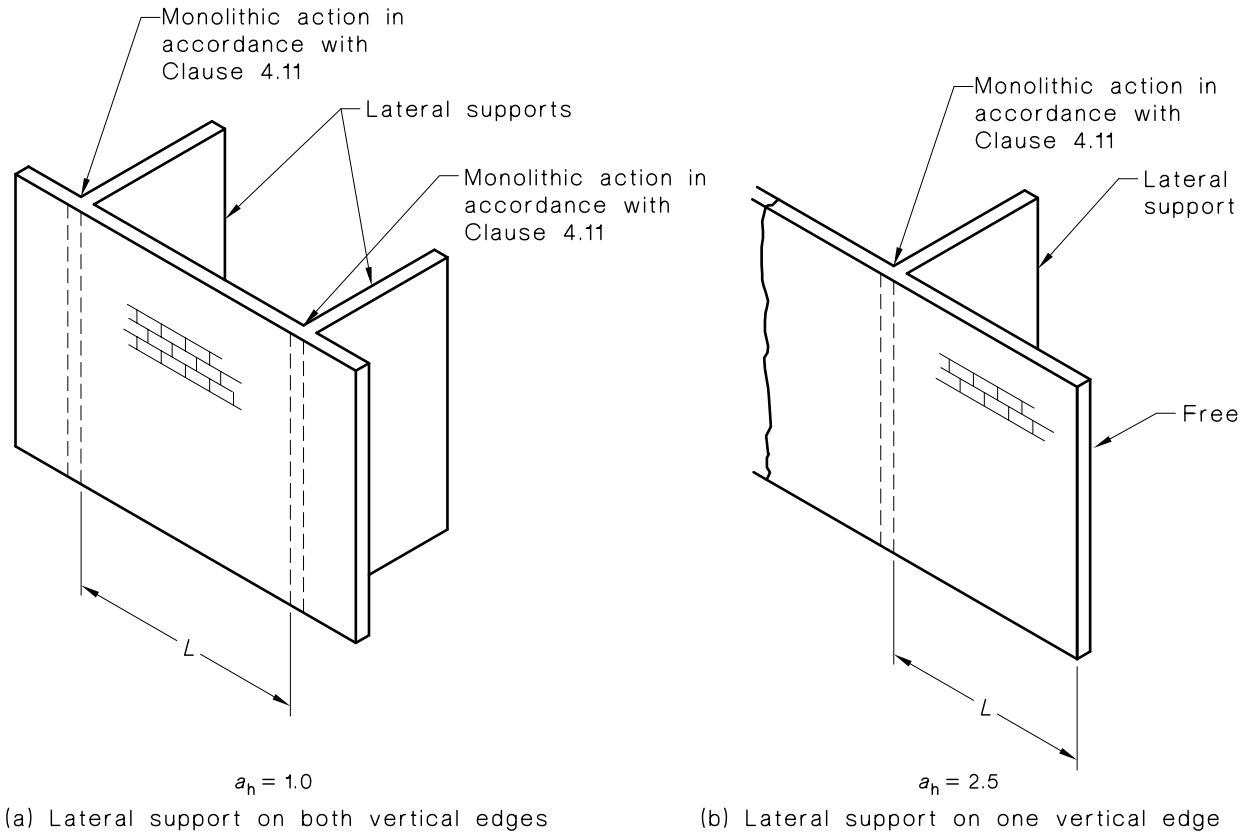

FIGURE 7.6 VALUES a_h FOR LATERAL SUPPORT

7.3.5 Concentrated loads

7.3.5.1 *General*

Each concentrated compression load acting on a masonry member shall be assumed to disperse through the masonry as provided in Clause 7.3.5.2.

The section immediately beneath or above the load shall be designed to comply with Clause 7.3.5.3. In addition, the masonry shall be designed to comply with Clause 7.3.1 subjected to a load equivalent to that present in a zone of dispersion a distance 0.5H measured vertically from the point of application of the load. This load shall be considered to have the same eccentricity as the concentrated load.

If a concentrated load is applied to an engaged pier, the pier shall be designed to carry the total load.

Accessed by SWINBURNE UNIVERSITY OF TECHNOLOGY on 15 Aug 2007

@Seismicisolation

Accessed by SWINBURNE UNIVERSITY OF TECHNOLOGY on 15 Aug 2007
@Seismicisolation

TABLE 7.3

REDUCTION FACTOR (k) FOR LATERAL INSTABILITY

Slenderness ratio S_r	Reduction factor (k)													
	Eccentricity to thickness ratio (e_1/t_w)													
	≤ 0.05	0.10			0.20			0.30			0.40			0.50
	Ratio of end eccentricities (e_2/e_1)													
	All values	1	0	−1	1	0	−1	1	0	−1	1	0	−1	All values
6	1.00	0.79	0.87	0.94	0.58	0.73	0.88	0.38	0.60	0.82	0.18	0.47	0.76	0
8	0.94	0.73	0.81	0.89	0.54	0.68	0.83	0.34	0.56	0.77	0.15	0.44	0.71	0
10	0.88	0.67	0.76	0.83	0.49	0.63	0.78	0.31	0.51	0.72	0.13	0.39	0.67	0
12	0.82	0.62	0.70	0.77	0.45	0.59	0.73	0.27	0.47	0.67	0.09	0.35	0.62	0
14	0.76	0.56	0.64	0.71	0.40	0.54	0.67	0.23	0.43	0.62	0.06	0.32	0.56	0
16	0.70	0.51	0.59	0.66	0.35	0.49	0.62	0.20	0.39	0.57	0.05	0.29	0.53	0
18	0.64	0.45	0.53	0.60	0.31	0.44	0.57	0.16	0.34	0.52	0.01	0.24	0.48	0
20	0.58	0.40	0.47	0.55	0.26	0.39	0.51	0.13	0.30	0.47	0	0.21	0.43	0
22	0.52	0.35	0.42	0.49	0.22	0.34	0.45	0.09	0.26	0.42	0	0.18	0.39	0
24	0.46	0.29	0.36	0.43	0.17	0.29	0.40	0.06	0.21	0.37	0	0.13	0.34	0
26	0.40	0.24	0.31	0.38	0.12	0.24	0.35	0.02	0.17	0.33	0	0.10	0.31	0
27	0.37	0.21	0.28	0.35	0.10	0.21	0.33	0	0.15	0.30	0	0.09	0.27	0

NOTES:

1 Linear interpolation may be used between the values given in the Table.

2 The values given in this Table satisfy only Equations 7.3.4.5(1) and 7.3.4.5(2), not Equations 7.3.4.5(3), 7.3.4.5(4) or 7.3.4.5(5).

@Seismicisolation

@Seismicisolation

7.3.5.2 *Dispersion of a concentrated load through the masonry*

A concentrated load acting on a member shall be assumed to disperse through the masonry at an angle of 45° (from the horizontal) from the perimeter of the bearing area of the load, but this dispersion shall not extend—

(a) into the dispersion zone of an adjacent concentrated load on the member; or

(b) beyond the structural end of the masonry in the member as defined in Clause 4.5.3.

7.3.5.3 *Load capacity under a concentrated load*

Where a member is of uniform and symmetrical cross-section, it shall be designed to comply with Clause 7.3.1, except that—

(a) the design compressive force (F_d) acting on any given cross-section shall include the design concentrated load, plus that portion of the other compressive forces that acts on the cross-sectional area (A_{ds}) under consideration;

(b) the design bending moment (M_d) acting on the same cross-section under consideration shall include the bending moment, if any, from the design concentrated load, plus that portion of the bending moments from other loads and forces that act on that cross-sectional area (A_{ds}); and

(c) the member shall be designed to satisfy the following equation for the cross-section immediately below or above the concentrated load—

$$F_d \leq k_b F_o \qquad \text{. . . 7.3.5.3(1)}$$

where

F_d = the design compressive force which acts on the cross-section of a member simultaneously with a bending moment, shear force or other load action

F_o = the basic compressive strength capacity of the cross-section (see Clause 7.3.2)

k_b = the concentrated bearing factor, in accordance with Clause 7.3.5.4.

7.3.5.4 *Concentrated bearing factor*

The value of the concentrated bearing factor (k_b) for use in Clause 7.3.5.3, shall be as follows:

(a) Other than in solid or cored unit masonry or grouted masonry—

$$k_b = 1.00$$

(b) In solid or cored unit masonry, or in grouted masonry—

$$k_b = 0.55 \frac{\left(1 + 0.5\frac{a_1}{L}\right)}{\left(\frac{A_{ds}}{A_{de}}\right)^{0.33}} \text{; or} \qquad \text{. . . 7.3.5.4(1)}$$

$$k_b = 1.50 + \frac{a_1}{L} \qquad \text{. . . 7.3.5.4(2)}$$

whichever is less, but k_b is not less than 1.0

Accessed by SWINBURNE UNIVERSITY OF TECHNOLOGY on 15 Aug 2007

@Seismicisolation

@Seismicisolation

where

a_1 = the distance from the end of the wall or pier to the nearest end of the bearing area

A_{ds} = the bearing area of a concentrated load in a member (see Clauses 7.3.5.2 and 7.3.5.3)

A_{de} = the effective area of dispersion of the concentrated load on the member at mid-height

Where concentrated loads are applied in close proximity to each other, the value of D_a is calculated in accordance with Clause 7.3.5.2(a)

= $L_e t$

L = the clear length of the wall or pier (see Figure 7.7)

L_e = the effective dispersion length of the load (see Figure 7.7)

t = the overall thickness of a masonry member cross-section perpendicular to the principal axis under consideration.

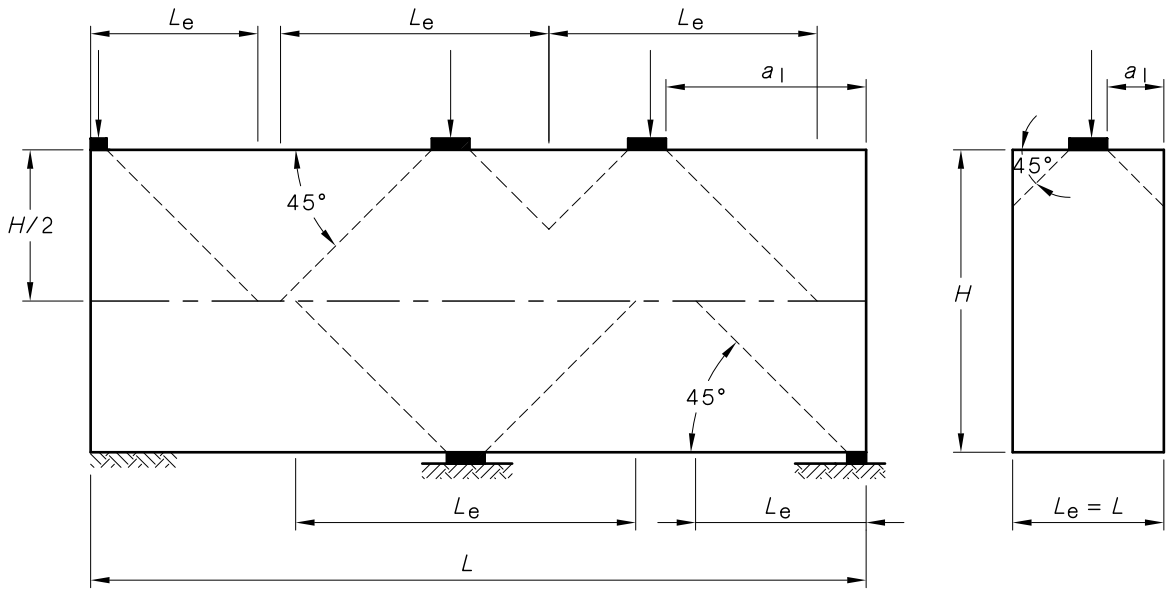

FIGURE 7.7 LOADING POSITIONS AND EFFECTIVE AREAS OF DISPERSION

7.4 DESIGN FOR MEMBERS IN BENDING

7.4.1 General

Unreinforced masonry members resisting bending moments shall be designed for vertical bending, horizontal bending or two-way bending in accordance with Clauses 7.4.2 to 7.4.4 as appropriate, whichever gives the greatest capacity.

Accessed by SWINBURNE UNIVERSITY OF TECHNOLOGY on 15 Aug 2007

@Seismicisolation

@Seismicisolation

7.4.2 Design for vertical bending

The design of an unreinforced masonry wall or part thereof to withstand vertical bending from actions of a short-term transient nature, which include out-of-plane wind loads, earthquake loads or similar forces, shall—

(a) comply with Clause 7.3; and

(b) be such that the following relationship is satisfied under each combination of simultaneously acting design vertical bending moment (M_{dv}) and design compressive force (F_d) at the cross-section under consideration:

$$M_{dv} \leq M_{cv} \qquad \ldots 7.4.2(1)$$

where

M_{dv} = the design vertical bending moment resulting from transient out-of-plane forces acting on the member in vertical spanning action

M_{cv} = the vertical bending moment capacity of the member as follows:

(i) Where

$f'_{mt} > 0$

M_{cv} = the lesser of—

(A) $M_{cv} = \phi\, k_{mt}\ f'_{mt}\, Z_d + f_d Z_d$; and . . . 7.4.2(2)

(B) $M_{cv} = 3.0\ \phi\, k_{mt}\ f'_{mt}\, Z_d$ . . . 7.4.2(3)

(ii) Where

$f'_{mt} = 0$

$M_{cv} = f_d Z_d$; . . . 7.4.2(4)

where f_d shall not be taken as greater than 0.36 MPa

where

ϕ = the capacity reduction factor (see Clause 4.4)

k_{mt} = a bending moment capacity factor

= 1.3 for AAC in thin-bed mortar

= 1.0 for all other masonry

f'_{mt} = the characteristic flexural tensile strength of the masonry (see Clause 3.3.3)

Z_d = the section modulus of the bedded area

f_d = the (minimum) design compressive stress on the bed joint at the cross-section under consideration (assessed in accordance with Clause 7.4.3.3).

7.4.3 Design for horizontal bending

7.4.3.1 *General*

The design of an unreinforced masonry wall, or part thereof, to withstand horizontal bending from actions of a short-term transient nature which include out-of-plane wind loads, earthquake loads or similar forces, shall comply with Clause 7.4.3.2, provided that—

(a) the wall has all perpends completely filled, except, in the case of hollow unit masonry, for the portions between the face shells; and

Accessed by SWINBURNE UNIVERSITY OF TECHNOLOGY on 15 Aug 2007

@Seismicisolation

@Seismicisolation

(b) the wall, or that part being designed for horizontal bending, has at least four continuous courses of masonry acting together in horizontal bending.

7.4.3.2 *Horizontal bending with tension stresses permitted*

A wall complying with the requirements of Clause 7.4.3.1 shall be proportioned so that the following relationship is satisfied under each combination of simultaneously acting design horizontal bending moment and design compressive stress acting on the bed joints:

$$M_{dh} \leq M_{ch} \qquad \ldots 7.4.3.2(1)$$

where

M_{dh} = the design horizontal bending moment resulting from transient out-of-plane forces acting on a wall in horizontal spanning action

M_{ch} = the horizontal bending moment capacity in N.mm per metre length of the wall as follows:

(a) For masonry, constructed of other than AAC units, the least of—

(i) $$M_{ch} = 2.0\,\phi\,k_p\left(\sqrt{f'_{mt}}\right)\left(1+\frac{f_d}{f'_{mt}}\right)z_d\,; \qquad \ldots 7.4.3.2(2)$$

(ii) $$M_{ch} = 4.0\,\phi\,k_p\left(\sqrt{f'_{mt}}\right)z_d\,; \qquad \ldots 7.4.3.2(3)$$

(iii) $$M_{ch} = \phi\left(0.44\,f'_{ut}Z_u + 0.56\,f'_{mt}Z_p\right) \qquad \ldots 7.4.3.2(4)$$

(b) For AAC masonry with thin-bed mortar—

$$M_{ch} = \phi\left(0.22\,f'_{ut} + 0.33k_{mt}\,f'_{mt}\right)Z_d \qquad \ldots 7.4.3.2(5)$$

where

ϕ = Capacity reduction factor (see Clause 4.4)

k_{mt} = A bending moment factor

= 1.3

k_p = A perpend spacing factor assessed in accordance with Clause 7.4.3.4

f'_{mt} = The characteristic flexural tensile strength, in megapascals (see Clause 3.3.3)

f_d = The (minimum) design compressive stress on the bed joint at the cross-section under consideration, in megapascals (assessed in accordance with Clause 7.4.3.3)

f'_{ut} = The characteristic lateral modulus of rupture of the masonry units, in megapascals (see Clause 1.5.2.9)

Z_d = The section modulus of the bedded area, in cubic millimetres per metre length

Z_u = The lateral section modulus of the masonry units, in cubic millimetres per metre length based on—

(i) for solid or cored units, the gross cross-section; and

(ii) for hollow units, the face shell dimensions

Z_p = The lateral section modulus, in cubic millimetres per metre length, based on the mortar contact area of the perpend joints.

Accessed by SWINBURNE UNIVERSITY OF TECHNOLOGY on 15 Aug 2007

@Seismicisolation

@Seismicisolation

7.4.3.3 *Compressive stress on bed joints*

The value of the design compressive stress (f_d) on the bed joints, for use in Clauses 7.4.2 and 7.4.3, shall be the compressive stress at the bed joint under consideration, resulting from the (minimum) design compressive force that acts simultaneously with the loads and forces producing the bending in the masonry member, and based on the design cross-sectional area of the bed joint.

Where the design for horizontal bending of a wall is based on an equivalent compressive stress applied throughout the whole height of the wall, the value of f_d to be used in Clause 7.4.3.2 shall be as follows:

(a) If the top of the wall is not laterally supported—

f_d = the design compressive stress at the top of the wall.

(b) If the wall is laterally supported at its top edge—

f_d = the design compressive stress at a distance equal to half the design height of the wall below its top lateral support.

For walls with openings, account shall be taken of the increased vertical stress in the masonry adjacent to the openings.

7.4.3.4 *Perpend spacing factor (k_p)*

The value of the perpend spacing factor, for use in Clause 7.4.3.2, shall be the lesser of—

(a) $$k_p = \frac{s_p}{t_u} \qquad \text{. . . 7.4.3.4(1)}$$

(b) $$k_p = \frac{s_p}{h_u} \qquad \text{. . . 7.4.3.4(2)}$$

(c) $k_p = 1$

where

s_p = The minimum overlap of masonry units in successive courses

t_u = The width of the masonry unit (measured through the wall)

h_u = The height of the masonry unit in the wall

7.4.4 Design for two-way bending

7.4.4.1 *General*

The design of an unreinforced masonry wall or part thereof to withstand two-way bending from actions of a short-term transient nature, which include out-of-plane wind and earthquake loads or similar forces, shall comply with Clause 7.4.4.2, provided that—

(a) the wall can be designed as a rectangular panel with lateral support at least along its base and one of its vertical edges;

(b) the wall is of single leaf or solid construction, or of cavity wall construction with each leaf of the cavity wall being of single leaf or solid construction; in the absence of more precise calculations for solid walls of multi-unit thickness the capacity shall be taken as the sum of the capacities of the separate leaves acting independently;

(c) the requirements for robustness in Clause 4.6 are satisfied;

(d) the construction and detailing of the wall are such that the requirements of Clauses 7.4.2 and 7.4.3 for development of bending strength capacity are satisfied within the four edges of the rectangular panel; and

Accessed by SWINBURNE UNIVERSITY OF TECHNOLOGY on 15 Aug 2007

@Seismicisolation

@Seismicisolation

(e) if the wall has an opening, the panel on each side of the opening is checked independently.

7.4.4.2 *Lateral load capacity of masonry other than AAC*

A wall complying with the requirements of Clause 7.4.4.1 shall be proportioned in accordance with the following:

(a) For masonry, except AAC unit masonry—

$$w_d \le \frac{2a_f}{L_d^{\,2}}\left(k_1 M_{ch} + k_2 M_{cd}\right) \qquad \ldots 7.4.4.2(1)$$

where

w_d = the total design wind, earthquake or similar pressure acting on the wall

a_f = an aspect factor (see Table 7.4)

L_d = the design length—

(i) when only one vertical edge of the wall is laterally supported—the actual length of the wall to the unsupported end or to a control joint;

(ii) when both vertical edges are laterally supported—half the actual length of the wall between lateral supports; or

(iii) when an opening is present in the wall—the distance from the laterally supported end of the wall to the nearest edge of the opening

M_{ch} = the horizontal bending moment capacity in accordance with Clause 7.4.3.2

M_{cd} = the diagonal bending moment capacity per unit length of diagonal crack line (see Clause 7.4.4.2(b))

k_1, k_2 = coefficients (see Table 7.4) where—

R_{fl} = the restraint factor for the first supported edge of the wall
= 0 if no rotational restraint
= 1 if fully restrained against rotation; or
= an intermediate value if there is partial rotational restraint

R_{f2} = the restraint factor for the second supported edge of the wall
= 0 if no rotational restraint
= 1 if fully restrained against rotation; or
= an intermediate value if there is partial rotational restraint

α = a slope factor = $\dfrac{GL_d}{H_d}$

L_o = the length of the opening (if any) (see Table 7.4)

H_d = the design height—

(a) when the top edge is not laterally supported—the actual height of the wall (H); or

(b) when the top edge is laterally supported—half the actual height of the wall (H/2)

G = the assumed slope of the crack line taken as $\dfrac{2(h_u + t_j)}{l_u + t_j}$ for half-overlap stretcher bonding

Accessed by SWINBURNE UNIVERSITY OF TECHNOLOGY on 15 Aug 2007

@Seismicisolation

@Seismicisolation

where

h_u = the height of masonry unit

t_j = the mortar joint thickness

l_u = the length of masonry unit.

(b) The diagonal bending moment capacity per unit length of diagonal crack line (M_{cd}) shall be calculated as follows:

$$M_{cd} = \phi\ f_t'\ Z_t \qquad \ldots 7.4.4.2(2)$$

where

ϕ = the capacity reduction factor (see Clause 4.4)

f_t' = The equivalent characteristic torsional strength = $2.25\sqrt{f_{mt}'}$

NOTE: f_t' and f_{mt}' are in megapascals.

Z_t = the equivalent torsional section modulus measured normal to the diagonal crack line, calculated as follows:

(i) For a solid rectangular section B Ĩ t_u where B. t_u—

$$Z_t = \frac{2B^2 t_u^{\ 2}}{(3B + 1.8t_u)} / \left[(l_u + t_j)\sqrt{1+G^2} \right] \qquad \ldots 7.4.4.2(3)$$

(ii) For a solid rectangular section B Ĩ t_u where $B < t_u$—

$$Z_t = \frac{2B^2 t_u^{\ 2}}{3t_u + 1.8B} / \left[(l_u + t_j)\sqrt{1+G^2} \right] \qquad \ldots 7.4.4.2(4)$$

(iii) For a hollow section—

$$Z_t = 2Bt_s \left(\frac{Bt_s}{1.5B + 0.9t_s} + t_u - t_s \right) / \left((l_u + t_j)\sqrt{1+G^2} \right) \qquad \ldots 7.4.4.2(5)$$

where

B = a height factor = $\dfrac{h_u + t_j}{\sqrt{1+G^2}}$

t_u = the width of the masonry unit (measured through the wall)

l_u = the length of masonry unit

h_u = the height of masonry unit

t_j = the mortar joint thickness

t_s = the thickness of face shell of a hollow masonry unit at the thinnest point

G = the assumed slope of the crack line (see Clause 7.4.4.2(a))

Accessed by SWINBURNE UNIVERSITY OF TECHNOLOGY on 15 Aug 2007

@Seismicisolation

@Seismicisolation

TABLE 7.4

COEFFICIENTS FOR OUT-OF-PLANE LATERAL LOAD RESISTANCE

Opening	Number of vertical edges supported	Slope factor α	Aspect factor (a_f)	k_1	k_2
No	Both	≤ 1	$\dfrac{1}{\left(1-\dfrac{\alpha}{3}\right)}$	$\dfrac{R_{f1}+R_{f2}}{2}+1-\alpha$	$\alpha\left(1+\dfrac{1}{G^2}\right)$
No	Both	> 1	$\dfrac{\alpha}{\left(1-\dfrac{1}{3\alpha}\right)}$	$\dfrac{R_{f1}+R_{f2}}{2}$	$1+\dfrac{1}{G^2}$
No	One	≤ 1	$\dfrac{1}{\left(1-\dfrac{\alpha}{3}\right)}$	R_{f1}	$\alpha\left(1+\dfrac{1}{G^2}\right)$
No	One	> 1	$\dfrac{\alpha}{\left(1-\dfrac{1}{3\alpha}\right)}$	R_{f1}	$1+\dfrac{1}{G^2}$
Yes	Both	≤ 1	$\dfrac{1}{\left(1-\dfrac{\alpha}{3}\right)+\dfrac{L_o}{L_d}\left(1-\dfrac{\alpha}{2}\right)}$	R_{f1}	$\alpha\left(1+\dfrac{1}{G^2}\right)$
Yes	Both	> 1	$\dfrac{\alpha}{\left(1-\dfrac{1}{3\alpha}\right)+\dfrac{L_o}{2L_d}}$	R_{f1}	$1+\dfrac{1}{G^2}$

7.4.4.3 *Lateral load capacity of AAC masonry*

For AAC unit masonry laid in thin-bed mortar provided that panels have proportions L:H not exceeding 2.5:1 and are supported on at least three edges and do not contain openings, the lateral load capacity is calculated as follows:

$$w_d \le 12\frac{H}{L}\left(b_v M_{cv}/H^2 + b_h M_{ch}/L^2\right) \qquad \ldots 7.4.4.3(1)$$

where

w_d = the total design wind, earthquake or similar pressure acting on the wall

H = the clear height of a member between horizontal lateral supports; or

= for a member without top horizontal support, the overall height from the bottom lateral support

L = the clear length of a wall between vertical lateral supports; or

= for a wall without a vertical support at one end or at a control joint, the length to that unsupported end or control joint

M_{cv} = the vertical bending moment capacity of a unit width strip, in accordance with Clause 7.4.2

M_{ch} = the horizontal bending moment capacity of a unit width strip, in accordance with Clause 7.4.3.2

Accessed by SWINBURNE UNIVERSITY OF TECHNOLOGY on 15 Aug 2007

@Seismicisolation

@Seismicisolation

b_v = the vertical bending coefficient (see Table 7.5)

b_h = the horizontal bending coefficient (see Table 7.5).

The bending coefficients (b_v) and (b_h) for use in this Clause shall be as derived from Table 7.5, taking into account the nature of the support along each of the four edges of the wall.

Walls that are not covered by Table 7.5, or for which the value of b_v or b_h is less than zero, shall be regarded as being outside the scope of Clause 7.4.4 and shall be designed to comply with other relevant clauses of the Standard.

7.5 DESIGN FOR MEMBERS IN SHEAR

7.5.1 Shear capacity

The design of an unreinforced masonry member to withstand shear forces other than by earthquake loads, with or without simultaneous compressive forces acting across the shear plane, shall be such that the following relationship is satisfied under each combination of simultaneously acting design shear force (V_d) and (minimum) design compressive stress (f_d) acting at the cross-section under consideration:

(a) For masonry, except AAC unit masonry—

$$V_d \leq V_o + V_1 \qquad \ldots 7.5.1(1)$$

where

V_o = the shear bond strength of the shear section

= $\phi f'_{ms} A_{dw}$

V_1 = the shear friction strength of the shear section

= $k_v f_d A_{dw}$

ϕ = the capacity reduction factor (see Clause 4.4)

f'_{ms} = the characteristic shear strength of masonry (see Clause 3.3.4)

A_{dw} = the combined bedded area and grout area, if any, of a shear-resisting portion of a member; for members of solid rectangular cross-section, $A_{dw} = A_d$

k_v = a shear factor as given in Table 3.3

f_d = the minimum design compressive stress on the bed joint under consideration but not greater than 2 MPa.

(b) For AAC masonry—

(i) for shear in a horizontal plane—

$$V_d \leq V_{Ao} + V_{A1} \qquad \ldots 7.5.1(2)$$

where

V_{Ao} = the shear rupture strength of the shear section used in AAC masonry

= $\phi 0.67 f'_{ut} A_b$

V_{A1} = the shear friction strength of the shear section used in AAC masonry

= $k_v f_d A_b$

ϕ = the capacity reduction factor (see Clause 4.4)

Accessed by SWINBURNE UNIVERSITY OF TECHNOLOGY on 15 Aug 2007

@Seismicisolation

@Seismicisolation

f'_{ut} = the characteristic lateral modulus of rupture of masonry units (see Clause 1.5.2.9)

A_b = the bedded area of a masonry cross-section (see Clause 4.5.4)

k_v = a shear factor as given in Table 3.3

f_d = the minimum design compressive stress on the bed joint under consideration.

The shear capacity for earthquake loads shall be in accordance with Paragraph A8.3.

(ii) for shear in a vertical plane—

$$V_d \leq \phi\ f'_{ms}\ A_b$$

where

ϕ = the capacity reduction factor (see Clause 4.4)

f'_{ms} = the characteristic shear strength of masonry (see Clause 3.3.4(c))

A_b = the bedded area (see Clause 4.5.4).

The shear resistance of planes containing membranes or flashings can result from both shear bond or rupture and shear friction. At the base of arches the shear bond shall be taken as zero or a value substantiated by tests. Shear friction shall be based on the (minimum) compressive force acting on the section and the appropriate value of k_v taken from Table 3.3.

The shear capacity for earthquake loads shall be in accordance with Paragraph A8.3.

7.5.2 Shear strength on a vertical plane

Where it is necessary to transfer longitudinal shear forces across vertical mortar joints in the masonry, the bonding or tying across the shear plane shall comply with Clause 4.11 and be such that it will develop the characteristic shear strength (f'_{ms}) required in the design in accordance with Clause 3.3.4.

7.5.3 Shear connectors

The design shear strength of connectors (V_c) shall be calculated as follows:

(a) Shear connectors across mortar joints

Where shear force is to be transferred across a mortar joint by steel connectors, the connectors shall be embedded at least 50 mm into the masonry each side of the interface. The design shear strength (V_c) of the connector shall be taken as follows:

(i) For connectors of rectangular cross-section—

$$V_c = \phi \frac{ruf_{yc}}{12} \qquad \ldots 7.5.3(1)$$

(ii) For connectors of circular cross-section—

$$V_c = \phi \frac{(d_{sc})^2 f_{yc}}{18} \qquad \ldots 7.5.3(2)$$

where

ϕ = the capacity reduction factor (see Clause 4.4)

r = the width of the connector

u = the thickness of the connector

f_{yc} = the characteristic tensile yield strength of the connector

d_{sc} = the diameter of the shear connector

Accessed by SWINBURNE UNIVERSITY OF TECHNOLOGY on 15 Aug 2007

@Seismicisolation

@Seismicisolation

(b) Shear connectors connecting masonry to other structural members

The design shear strength (V_c) of a connector shall be such that—

$$V_c = \phi V_{sc} \qquad \ldots 7.5.3(3)$$

where

ϕ = the capacity reduction factor (see Clause 4.4)

V_{sc} = the characteristic shear strength of the connector (obtained by tests)

7.6 DESIGN OF SHEAR WALLS

7.6.1 General

Shear walls shall be designed to comply with Clauses 7.2 to 7.5 and in accordance with the provisions of Clauses 7.6.2 and 7.6.3.

7.6.2 Two or more shear walls acting together

Where wind loads and other lateral forces are resisted by two or more shear walls acting together, the load and force actions shall be distributed between the shear walls using recognized principles, taking into account the relative stiffness of the walls under these actions, and the effects of openings, if any, in the walls.

7.6.3 Design for compression and in-plane lateral forces

The strength capacity and stability of a shear wall under compression and flexure in the direction of the length of the wall shall be assessed on the basis of the properties of the whole monolithic cross-section of the wall, with the effective widths of flanges (if any) calculated in accordance with Clause 4.5.2.

Flanges shall be designed in accordance with the requirements of Clauses 7.2 to 7.5 to carry their portion of the load action, and shall be bonded or tied to the remainder of the wall in accordance with the requirements of Clause 4.11.

7.7 DESIGN OF MASONRY VENEER WALLS

7.7.1 General

Masonry veneer walls shall be designed to comply with Clauses 7.2 to 7.5 and in accordance with the provisions of Clauses 7.7.2 and 7.7.3.

The wall ties for a masonry veneer wall shall be designed to transfer all out-of-plan-lateral loads and forces applied to the face of the masonry veneer to the structural backing which supports that wall.

The wall ties connecting the veneer and its backing shall comply with the provisions of Clause 4.10.

Accessed by SWINBURNE UNIVERSITY OF TECHNOLOGY on 15 Aug 2007

@Seismicisolation

@Seismicisolation

TABLE 7.5

BENDING COEFFICIENTS FOR WALLS OF AAC MASONRY IN TWO-WAY BENDING

Edge restraint to wall panels	Vertical bending coefficient, b_v	Horizontal bending coefficient, b_h
1 S or R S [ ] S S or R	1.00	1.00
2 S or R S [ ] R S or R	1.00	1.25
3 S or R R [ ] R S or R	1.00	1.5
4 Free S [ ] S S or R	0.25	1.00
5 Free S [ ] R S or R	0.25	1.25
6 Free R [ ] R S or R	0.25	1.50

LEGEND:

H = the height of the wall panel as defined in Clause 1.6.

L = the length of the wall panel as defined in Clause 1.6.

S = the edge of wall is simply supported, i.e. laterally supported but not rotationally fixed.

R = the edge of wall is rotationally restrained as well as laterally supported (Note that structural continuity of wall construction at an edge does not necessarily provide rotational restraint at that edge).

Free = the edge of wall has neither lateral support nor rotational restraint.

NOTE: A control joint in a wall is to be regarded as a free edge.

7.7.2 Wall ties with flexible structural backing

For veneer with flexible structural backing, both the ultimate strength and serviceability limit states shall be considered as follows:

(a) *Ultimate strength limit state*

For the ultimate strength limit state, each tie shall be designed so that the following relationship is satisfied:

$$F_{td} \leq \phi F_t \qquad \ldots 7.7.2(1)$$

where

F_{td} = the design compressive or tensile tie force

ϕ = the capacity reduction factor (see Clause 4.4)

F_t = the characteristic strength of the tie appropriate to its duty rating (see Table 3.5).

Accessed by SWINBURNE UNIVERSITY OF TECHNOLOGY on 15 Aug 2007

@Seismicisolation

@Seismicisolation

In the absence of an analysis considering the stiffness of the ties, structural backing and the veneer before and after cracking, the design tie force (F_{td}) shall be taken as 20% of the total tributary lateral load on a vertical line of ties between horizontal supports.

The ties shall be designed to resist $2 \times F_{td}$ in the following locations:

(i) The row at the top of a single storey veneer.

(ii) Where a veneer is continuous past a horizontal floor support, at the first row above and the first row below the floor.

(iii) On lines opposite vertical lateral supports.

NOTE: This can be achieved by using ties of a higher duty or by doubling the number of ties in these locations.

(b) *Serviceability limit state*

For the serviceability limit state, the deflection of the structural backing under the design serviceability wind load shall be not greater than its span divided by 300.

Earthquake loads do not need to be considered for the serviceability limit state.

7.7.3 Wall ties with stiff structural backing

For veneer with stiff structural backing, each tie shall be designed such that the following relationship is satisfied for the ultimate strength limit state:

$$F_{td} \leq \phi F_t \qquad \ldots 7.7.3(1)$$

where

F_{td} = the design compressive or tensile tie force

ϕ = the capacity reduction factor (see Clause 4.4)

F_t = the characteristic strength of the tie appropriate to its duty rating (see Table 3.6).

In the absence of a more exact analysis, the design tie force (F_{td}) shall be taken as 1.3 times the total tributary design lateral load acting on the tie.

7.8 DESIGN OF CAVITY WALLS

7.8.1 General

Each leaf of a cavity wall shall be designed as an independent member to transmit its share of vertical and lateral loads in accordance with Clause 7.2 to 7.5, and in accordance with the provisions of Clause 7.8.2 to 7.8.4.

7.8.2 Compressive load capacity with both leaves loaded

Where both leaves of a cavity wall support the compressive force, then either—

(a) the stronger leaf shall be designed to withstand the whole of the compressive force; or

(b) each leaf shall be designed as an independent compression member to carry its share of the total compressive force, taking into account all factors likely to affect the distribution of load between the leaves, including any different material capacities and properties in the leaves, differential movements and rotational effects from floors and beams.

Accessed by SWINBURNE UNIVERSITY OF TECHNOLOGY on 15 Aug 2007

@Seismicisolation

@Seismicisolation

7.8.3 Lateral bending capacity

The total lateral loads and forces acting on a cavity wall shall be either—

(a) except for walls designed in accordance with Clause 7.4.4, assessed as being shared between the two leaves of the wall in a manner that takes into account the flexural rigidities of the two leaves, the stiffness of the wall ties connecting the two leaves, and the amount of the total load that is applied directly to the face of each leaf; or

(b) assumed to be resisted wholly by one leaf of the wall.

7.8.4 Wall ties

Each tie shall be designed such that the following relationship is satisfied for the ultimate strength limit state—

$$F_{td} \leq \phi F_t \qquad \ldots 7.8.4$$

where

F_{td} = the design compressive or tensile force tie force

ϕ = the capacity reduction factor (see Clause 4.4)

F_t = the characteristic strength of the tie appropriate to its duty rating (see Table 3.6).

In the absence of a more exact analysis, the design tie force (F_{td}) shall be taken as the design load acting on the tributary area of the tie, except that a cavity wall with only the inner masonry leaf supported shall be considered as a veneer wall with stiff structural backing (see Clause 7.7.3).

The number of ties shall be double that required elsewhere in the wall on each line of ties opposite a vertical lateral support.

7.9 DESIGN OF DIAPHRAGM WALLS

7.9.1 General

Diaphragm walls shall be designed to comply with Clauses 7.2 to 7.5, and in accordance with the provisions of Clauses 7.9.2 and 7.9.3.

7.9.2 Design for lateral loads

A diaphragm wall shall be designed to resist lateral loads and forces by vertical spanning action of the wall, with its strength capacity being based on the section modulus of the overall cross-section of the wall, using an effective flange width determined in accordance with Clause 4.5.2.

Each leaf shall also be designed to withstand, by horizontal spanning action between the diaphragms, the lateral loads and forces that are applied directly to that leaf, without any sharing of loads between the two leaves.

7.9.3 Diaphragms

Diaphragms in diaphragm walls shall be designed to withstand their portion of the load action, including the whole of lateral shear forces acting on the wall.

Accessed by SWINBURNE UNIVERSITY OF TECHNOLOGY on 15 Aug 2007

@Seismicisolation

@Seismicisolation

SECTION 8 STRUCTURAL DESIGN OF REINFORCED MASONRY

8.1 SCOPE OF SECTION

This Section sets out particular requirements for the structural design of masonry with steel reinforcement to enhance its resistance to applied forces for the strength and serviceability limit states. These requirements are in addition to the general requirements of Section 4.

Masonry that includes reinforcement not complying with the requirements of this Section for the specific action, shall be regarded as unreinforced masonry for that action and designed in accordance with Section 7.

Masonry that includes pre-stressed tendons shall be designed in accordance with Section 9.

8.2 GENERAL BASIS OF DESIGN

The structural design of reinforced masonry shall be in accordance with accepted principles used for reinforced concrete design, modified as appropriate to suit the particular characteristics of reinforced masonry, except that it shall be permissible for the reinforcement in the masonry to be ignored for the capacity assessment purposes and for the masonry to be designed as unreinforced masonry in accordance with Section 7. The reinforcement shall nevertheless comply with the requirements of Clause 5.7.

Calculations for strength of cross-sections in bending or in bending combined with axial force shall incorporate equilibrium and strain-compatibility considerations, and shall be consistent with the following assumptions:

(a) Plane sections remain plane when considering the strain distribution in the masonry in compression, or reinforcement in tension or compression.

(b) The strain in the outermost compressive fibre does not exceed 0.0035.

(c) The effective depth (d) is from the extreme compressive fibre of the masonry to the resultant tensile force in the steel in that zone which will be tensile under ultimate strength conditions. The depth to the neutral axis used in design for bending from the extreme compressive fibre to the neutral axis $k_u d$ does not exceed $0.4d$. In masonry with raked joints, the extreme compressive fibre is taken to be at the depth of the raking. In masonry with ironed joints, the extreme compressive fibre is taken at the face of the masonry.

(d) The uniform compressive stress of (0.85) (1.3) f_m acts on the area bounded by—

  (i) the compression face of the cross-section; and

  (ii) a line parallel to the neutral axis at the strength limit state under the loading concerned, and located at a distance $0.85\, k_u\, d$ from the extreme compressive fibre.

(e) The tensile strength of masonry is zero.

(f) Stresses in steel reinforcement are derived from the appropriate stress-strain curve.

8.3 GENERAL REINFORCEMENT REQUIREMENT

8.3.1 General

Reinforcement shall be designed as—

(a) main reinforcement, which is intended to resist axial compression, bending, shear, tension or a combination of these; or

Accessed by SWINBURNE UNIVERSITY OF TECHNOLOGY on 15 Aug 2007

@Seismicisolation

@Seismicisolation

(b) secondary reinforcement, which is intended to resist shrinkage, temperature and the effects of localized loading.

8.3.2 Main reinforcement

The quantity and disposition of main reinforcement shall be that required to satisfy the specific requirements of Clauses 8.4 to 8.9.

8.3.3 Secondary reinforcement

Where a wall is designed to resist non-uniform loads or pressures, temperature, or shrinkage, secondary reinforcement shall be provided.

The area of secondary reinforcement shall be not less than 0.00035 A_d.

8.3.4 Reinforcement detailing, cover and protection

8.3.4.1 *General*

The detailing of the reinforcement in masonry shall comply with the appropriate requirements in AS 3600, except as specifically modified in this Clause or in Clause 5.7.

Reinforcement placed in mortar joints in the masonry shall comply with Clause 5.7.3. All other reinforcement shall be surrounded by grout, with cover as given in Clause 5.7.2.

8.3.4.2 *Minimum bar spacing*

The minimum clear distance between parallel bars shall be such that the grout can be properly placed and compacted. Bars with a clear spacing of 20 mm are deemed to comply with this requirement.

8.3.5 Close-spaced reinforcement for increased ductility in earthquakes

For a wall to be classed as one with close-spaced reinforcement it shall be fully grouted and contain reinforcement at a maximum spacing of 800 mm both horizontally and vertically. The minimum area of horizontal and vertical reinforcement shall be 0.0013 A_d.

8.3.6 Wide-spaced reinforcement

For a wall to be classed as one with wide-spaced reinforcement, the reinforcement shall comply with Clauses 8.4 to 8.7, as appropriate.

8.4 DESIGN FOR MEMBERS IN COMPRESSION

Members subjected to compressive forces, shall be such that—

$$F_d \le \phi\, k_s \left[f'_m A_b + k_c \sqrt{\left(\frac{f'_{cg}}{1.3}\right)}\, A_c + f_{sy}\, A_s \right] \qquad \ldots 8.4$$

where

F_d = the design compression force acting on the cross-section

ϕ = the capacity reduction factor (see Clause 4.4)

k_s = a reduction factor taken as 1.18 – 0.03 Sr but not greater than 1.0

S_r = the slenderness ratio in accordance with Clause 7.3.4.3

f'_m = the characteristic compressive strength of masonry (see Clause 3.3.2)

A_b = the bedded area of the masonry cross-section (see Clause 4.5.4)

k_c = a strength factor for grout in compression

= 1.4 for hollow concrete masonry units of density greater than 2000 kg/m3

= 1.2 for all other masonry

Accessed by SWINBURNE UNIVERSITY OF TECHNOLOGY on 15 Aug 2007

@Seismicisolation

@Seismicisolation

f'_{cg} = The design characteristic compressive strength of the grout. The value of f'_{cg} in megapascals shall not exceed 1.3 f'_{uc} The units of f'_{cg} and $\sqrt{f'_{cg}/1.3}$ in the equation are in megapascals.

A_c = The design cross-sectional area of grout in the reinforced masonry member (see Clause 4.5.7)

f_{sy} = the design yield strength of reinforcement (see Clause 3.6.1)

A_s = the total cross-sectional area of main reinforcement.

The main reinforcement in the direction of the axial load shall—

(a) be located symmetrically in the cross-section;

(b) be laterally restrained in both horizontal directions by ties of not less than 6 mm diameter which are spaced at centres not exceeding the least cross sectional dimension of the member or 400 mm, whichever is the lesser; and

(c) have an area, $A_s \geq 0.002\ A_d$.

Reinforcement quantities in excess of $A_s = 0.04\ A_d$ shall be used only if the required minimum bar spacing and grout cover can be achieved, and the grout can be properly placed and compacted around the reinforcement.

If the reinforcement does not comply with these requirements, A_s shall be taken as zero and the member designed as unreinforced masonry in accordance with Section 7.

Where the eccentricity of the applied compressive force exceeds 0.05*t*, the member shall be designed for the interaction of compressive force and induced bending using Clause 8.8.

8.5 DESIGN FOR MEMBERS IN BENDING

Reinforced masonry members subject to bending, and complying with the following equation, are deemed to have satisfied the requirements of Clause 8.2:

$$M_d \leq \phi\ f_{sy} A_{sd} d \left[1 - \frac{0.6 f_{sy} A_{sd}}{(1.3 f'_m) bd} \right] \qquad \ldots 8.5$$

where

M_d = the design bending moment acting on the cross-section of member

ϕ = the capacity reduction factor (see Clause 4.4)

f_{sy} = the design yield strength of reinforcement (see Clause 3.6.1)

A_{sd} = the portion of the cross-sectional area of the main tensile reinforcement used for design purposes in a reinforced masonry member;

= the lesser of $\dfrac{(0.29)1.3 f'_m bd}{f_{sy}}$ and A_{st}

d = the effective depth of the reinforced masonry member

f'_m = the characteristic compressive strength of masonry (see Clause 3.3.2)

b = the width of a masonry member of solid rectangular cross-section; or

= the effective width of a member in accordance with Clause 4.5.2

A_{st} = the cross-sectional area of fully anchored longitudinal reinforcement in the tension zone of the cross-section under consideration

Accessed by SWINBURNE UNIVERSITY OF TECHNOLOGY on 15 Aug 2007

@Seismicisolation

@Seismicisolation

The main reinforcement in the direction of bending shall—

(a) be spaced at centres not exceeding 2000 mm;

(b) include an area of at least 100 mm^2 within 300 mm of the edges of the member; and

(c) be such that $M_d \geq 1.2$ bending capacity of the unreinforced masonry.

In members designed for bending in two directions, the requirements for main tensile reinforcement shall be met for the reinforcement in each direction.

The width of the compression face of reinforced masonry in bending (b) shall be assumed to extend beyond the line of the tensile reinforcement by a distance not exceeding the least of the following:

(i) For vertical reinforcement—

(A) 400 mm;

(B) twice the thickness of the wall; and

(C) the distance to the structural end of the masonry in the element.

(ii) For horizontal reinforcement—

(A) one and one-half times the thickness of the wall; or

(B) the distance to the horizontal edge of the masonry.

8.6 DESIGN FOR MEMBERS IN SHEAR

8.6.1 General

For walls subjected to in-plane forces the member shall also be checked for bending and overall stability.

8.6.2 In-plane shear in walls

A reinforced wall subject to in-plane shear shall be such that—

(a) if $H/L \leq 2.3$

$$V_d \leq \phi(f_{vr} A_d + 0.8 f_{sy} A_s) \qquad \ldots 8.6.2(1)$$

where

V_d = the design shear force acting on the cross-section of the masonry wall

ϕ = the capacity reduction factor (see Clause 4.4)

f_{vr} = (1.50 – 0.5 H/L) MPa

A_d = the design cross-section area of member (see Clause 4.5.6)

f_{sy} = the design yield strength of reinforcement (see Clause 3.6.1)

A_s = the cross-sectional area of reinforcement, as follows:

(i) If $H/L > 1.0$

$$A_s = A_{sh} L/H$$

where

A_{sh} = total area of anchored horizontal reinforcement

(ii) If H/L. 1.0

A_s = the total cross-sectional area of horizontal reinforcement, or total cross-sectional area of vertical reinforcement, whichever is less

Accessed by SWINBURNE UNIVERSITY OF TECHNOLOGY on 15 Aug 2007

@Seismicisolation

@Seismicisolation

The reinforcement shall comply with the following:

(A) The reinforcement shall be located symmetrically in the cross-section.

(B) Vertical reinforcement shall be spaced at centres not exceeding 0.75*H* and in any case not greater than 2000 mm horizontally. Horizontal reinforcement shall be spaced at centres not exceeding 0.75*L* and in any case not greater than 3000 mm vertically.

(C) The vertical reinforcement shall be such that A_s. 0.0013 A_d and the horizontal reinforcement is such that A_s. 0.0007 A_d. If the reinforcement does not meet these requirements then the wall shall be designed in accordance with Clause 7.6.3.

(D) Reinforcement with an area of at least 100 mm^2 shall be included within 300 mm of edges parallel to the main reinforcement. It shall be permissible to omit the reinforcement at an edge of the wall, provided the member is anchored to an abutting reinforced concrete member.

Anchorage by the provision of starter bars of an area equal to or exceeding the area of the main reinforcement, lapped with the main reinforcement and anchored to the concrete member in accordance with the requirements of AS 3600, shall be deemed to satisfy this requirement.

Where the wall is not externally supported against overturning it shall be anchored to provide resistance to overturning and shear forces such that—

$$V_d = \phi[k_{sw} P_v L/2 + f_{sy} A_{sv} (L-2l')] / H \qquad \ldots 8.6.2(2)$$

where

V_d = the design shear force acting on the cross-section of the masonry wall

ϕ = the capacity reduction factor (see Clause 4.4)

k_{sw} = a reduction factor

$$= \left(1 - \frac{P_v}{A_d f'_m}\right)$$

P_v = the applied uniform vertical load

f'_m = the characteristic compressive strength of masonry (see Clause 3.3.2)

A_b = the bedded area of a masonry cross-section (see Clause 4.5.4)

A_{sv} = the cross-sectional area of shear reinforcement perpendicular to the direction of the applied shear and anchored in accordance with this Clause

f_{sy} = the design yield strength of reinforcement (see Clause 3.6.1).

Accessed by SWINBURNE UNIVERSITY OF TECHNOLOGY on 15 Aug 2007

@Seismicisolation

@Seismicisolation

L = the length of the member in the direction of the shear load

l' = the distance from the centroid of the reinforcement under consideration to the tensile end of the member

H = the height of the member perpendicular to the direction of the shear load.

(b) if $H/L > 2.3$—designed in accordance with Clause 8.6.3.

8.6.3 Out-of-plane shear in walls

A reinforced wall subject to out-of-plane shear shall be such that—

$$V_d \leq \phi\left(f'_{vm} b_w d + f_{vs} A_{st} + f_{sy} \frac{A_{sv} d}{s} \right) \qquad \ldots 8.6.3(1)$$

but not more than $4\ \phi\ f'_{vm}\ b_w\ d$

where

V_d = the design shear force acting on the cross-section of the masonry wall

ϕ = the capacity reduction factor (see Clause 4.4)

f'_{vm} = The characteristic shear strength of reinforced masonry = 0.35 MPa

b_w = the width of the web of the shear-resisting area of the masonry wall (for a solid rectangular cross-section, $b_w = b$)

d = the effective depth of the reinforced masonry wall

f_{vs} = the design shear strength of main reinforcement = 17.5 MPa

A_{st} = the cross-sectional area of fully anchored longitudinal reinforcement in the tension zone of the cross-section under consideration, or $0.02 b_w d$, whichever is less

f_{sy} = the design yield strength of reinforcement (see Clause 3.6.1)

A_{sv} = the cross-sectional area of shear reinforcement

s = the spacing of shear reinforcement

8.6.4 Shear in beams

A reinforced beam subject to shear shall be designed in accordance with Clause 8.6.3.

Where shear reinforcement is required, it shall be—

(a) spaced at centres (in the direction of the span) not exceeding $0.75D$ or 600 mm, whichever is less; and

(b) in accordance with the requirements for shear reinforcement in AS 3600.

8.7 DESIGN FOR MEMBERS IN TENSION

A reinforced member subject to axial tension shall be such that—

$$F_{dt} \leq \phi f_{sy} A_s \qquad \ldots 8.7(1)$$

where

F_{dt} = the design tension force acting on the cross-section of a member

ϕ = the capacity reduction factor (see Clause 4.4)

f_{sy} = the design yield strength of reinforcement (see Clause 3.6.1)

A_s = the total cross-sectional area of the main reinforcement.

@Seismicisolation

Accessed by SWINBURNE UNIVERSITY OF TECHNOLOGY on 15 Aug 2007

@Seismicisolation

The main reinforcement in the direction of axial load shall—

(a) be located symmetrically in the cross-section;

(b) include an area of at least 100 mm^2 within 300 mm of the edges of the member; and

(c) be spaced at centres not exceeding 2000 mm.

8.8 DESIGN FOR MEMBERS IN COMBINED BENDING AND COMPRESSION

A reinforced member subject to simultaneous action of compression forces and bending moments shall be designed such that the compressive load capacity is 0.85 times that given by Clause 8.4 for a concentrically loaded member and the bending capacity is in accordance with Clause 8.5.

8.9 DESIGN FOR MEMBERS IN COMBINED BENDING AND TENSION

A reinforced member subject to simultaneous axial tension and bending shall be designed such that the tensile load capacity is in accordance with Clause 8.7 and the bending capacity is in accordance with Clause 8.5.

Accessed by SWINBURNE UNIVERSITY OF TECHNOLOGY on 15 Aug 2007

@Seismicisolation

@Seismicisolation

CHAPTER 5

STRUCTURAL DESIGN ACTIONS

This Chapter consists of edited extracts from the following Standards:

AS/NZS		
1170	Structural design actions	
1170.0:2002	Part 0:	General principles
1170.1:2002	Part 1:	Permanent, imposed and other actions
1170.2:2002	Part 2:	Wind actions
AS		
1170	Minimum design loads on structures	
1170.4—1993	Part 4:	Earthquake loads

It is acknowledged that all parts of Australia are subject to some degree of 'seismic risk' and, hence, all new structures (including domestic buildings) are required to be assessed for resistance to earthquake actions; however, not all buildings have to be specifically designed or detailed to resist this type of loading. For these reasons, relevant extracts from AS 1170.4 are included in this Chapter.

Note that Appendix D of AS/NZS 1170.0 provides for the use of annual probabilities of exceedance with AS 1170.4.

Accessed by SWINBURNE UNIVERSITY OF TECHNOLOGY on 15 Aug 2007

@Seismicisolation

@Seismicisolation

STANDARDS AUSTRALIA/STANDARDS NEW ZEALAND

Australian/New Zealand Standard
Structural design actions

Part 0: General principles

SECTION 1 SCOPE AND GENERAL

1.1 SCOPE

This Standard specifies general procedures and criteria for the structural design of a building or structure in limit states format. It covers limit states design, actions, combinations of actions, methods of analysis, robustness and confirmation of design.

The Standard is applicable to the structural design of whole buildings or structures and their elements.

This Standard covers the following actions:

(a) Permanent action (dead load).

(b) Imposed action (live load).

(c) Wind.

(d) Snow.

(e) Earthquake.

(f) Liquid pressure.

(g) Ground water.

(h) Rainwater ponding.

(i) Earth pressure.

NOTES:

1 Where this Standard does not give information required for design, special studies should be carried out. Guidance is given in Appendix A.

2 Where testing is used to determine data for design or to confirm a design, guidance on methods is given in Appendix B.

3 Normal design practice is that all likely actions be considered. Any actions considered in design that are not in the above list should be the subject of special studies, as they are not covered by this Standard.

4 Additional information on other actions such as movement effects, construction loads and accidental actions is given in the Commentary (see Preface).

5 Movement effects include actions on structures resulting from expansion or contraction of materials of construction (such as those due to creep, temperature or moisture content changes) and also those resulting from differential ground settlement. Serviceability may be particularly affected by such actions.

6 Guidance on criteria for serviceability is given in Appendix C, which have been found to be generally suitable for importance level 2 buildings. Structures of special importance or structures where more stringent criteria are appropriate may require the stated criteria to be tightened.

Accessed by SWINBURNE UNIVERSITY OF TECHNOLOGY on 15 Aug 2007

@Seismicisolation

@Seismicisolation

1.2 APPLICATION

This Standard may be used as a means for demonstrating compliance with the Requirements of Part B1 of the Building Code of Australia.

This Standard is intended for citation by New Zealand's Building Industry Authority as a document that contributes towards establishing compliance with Clause B1 'Structure' of the New Zealand Building Code. A code complying design is also contingent upon the Standard being used in conjunction with the appropriate material Standard and with additional approval being granted in respect of the engineering judgement calls made in the application of the Standard.

1.3 REFERENCED DOCUMENTS

The following documents are referred to in this Standard:

AS
1170 Minimum design loads on structures
1170.3 Part 3: Snow loads
1170.4 Part 4: Earthquake loads

AS/NZS
1170 Structural design actions
1170.1 Part 1: Permanent, imposed and other actions
1170.2 Part 2: Wind actions

Australian Building Codes Board
Building Code of Australia

1.4 DEFINITIONS

For the purpose of this Standard the definitions below apply.

1.4.1 Action

Set of concentrated or distributed forces acting on a structure (direct action), or deformation imposed on a structure or constrained within it (indirect action).

NOTE: The term load is also often used to describe direct actions.

1.4.2 Action effects (internal effects of actions, load effects)

Internal forces and bending moments due to actions (stress resultants).

1.4.3 Combination of actions

Set of design values used to confirm that the limit states are not exceeded under the simultaneous influence of different actions.

1.4.4 Design action effect

The action effect computed from the design values of the actions or design loads.

1.4.5 Design capacity

The product of the capacity reduction factor and the nominal capacity.

1.4.6 Design situation

Set of conditions for which the design is required to demonstrate that relevant limit states are not exceeded.

1.4.7 Imposed action

A variable action resulting from the intended use or occupancy of the structure.

Accessed by SWINBURNE UNIVERSITY OF TECHNOLOGY on 15 Aug 2007

@Seismicisolation

@Seismicisolation

1.4.8 Limit states

States beyond which the structure no longer satisfies the design criteria.

NOTE: Limit states separate desired states (compliance) from undesired states (non-compliance).

1.4.9 Limit states, serviceability

States that correspond to conditions beyond which specified service criteria for a structure or structural element are no longer met.

NOTE: The criteria are based on the intended use and may include limits on deformation, vibratory response, degradation or other physical aspects.

1.4.10 Limit states, ultimate

States associated with collapse, or with other similar forms of structural failure.

NOTE: This generally corresponds to the maximum load-carrying resistance of a structure or structural element but, in some cases, to the maximum applicable strain or deformation.

1.4.11 Load

The value of a force appropriate to an action.

1.4.12 Permanent action

Action that is likely to act continuously and for which variations in magnitude with time are small compared with the mean value.

1.4.13 Proof testing

Application of test loads to a structure, sub-structure, member or connection, to ascertain the structural characteristics of that one item under test.

1.4.14 Prototype testing

Application of test loads to one or more samples of structures, sub-structures, members or connections to ascertain the structural characteristics of the population that the sample represents.

1.4.15 Reliability

Ability of a structure or structural element to fulfil the specified criteria, including the working life, for which it has been designed.

NOTE: Reliability covers structural safety and serviceability, and can be expressed in terms of probability.

1.4.16 Serviceability

Ability of a structure or structural element to perform adequately for normal use under all expected actions.

1.4.17 Shall

Indicates that a statement is mandatory.

1.4.18 Should

Indicates a recommendation (non-mandatory).

1.4.19 Structure

Organized combination of connected structural elements designed to provide some measure of resistance.

1.4.20 Structural element

Physically distinguishable part of a structure, for example, wall, column, beam, connection.

Accessed by SWINBURNE UNIVERSITY OF TECHNOLOGY on 15 Aug 2007

@Seismicisolation

@Seismicisolation

1.4.21 Structural robustness

Ability of a structure to withstand events like fire, explosion, impact or consequences of human errors, without being damaged to an extent disproportionate to the original cause.

1.4.22 Special study

A procedure for justifying departure from this Standard or for determining information not covered by this Standard.

NOTE: Special studies are outside the scope of this Standard.

1.5 NOTATION

Where non-dimensional ratios are involved, both the numerator and denominator are expressed in identical units.

The dimensional units for length and stress in all expressions or equations are to be taken as millimetres (mm) and megapascals (MPa) respectively, unless specifically noted otherwise.

Unless otherwise stated, the notation in this Standard has the following meanings:

E = action effect

E = earthquake action

E_s = serviceability earthquake action

E_u = ultimate earthquake action

E_d = design action effect

$E_{d,dst}$ = design action effect of destabilizing actions

$E_{d,stb}$ = design action effect of stabilizing actions

F_e = earth pressure action

$F_{e,u}$ = ultimate earth pressure action

F_{ice} = ice action

F_{gw} = ground water action

F_{lp} = liquid pressure action

F_{pnd} = rainwater ponding action

F_{sn} = snow action

G = permanent action (self-weight or 'dead' action)

k_p = probability factor

k_t = factor to allow for variability of structural units

N = design working life of a building or structure, in years

P = the annual probability of exceedance

P_{ref} = reference probability of exceedance for safety

Q = imposed action (due to occupancy and use, 'live' action)

R = nominal capacity (based on the fifth percentile strength)

R_d = design capacity (equal to ϕR)

Accessed by SWINBURNE UNIVERSITY OF TECHNOLOGY on 15 Aug 2007

@Seismicisolation

@Seismicisolation

S_u = ultimate value of various actions appropriate for particular combinations

V_{sc} = coefficient of variation of structural characteristics

W = wind action

W_s = serviceability wind action

W_u = ultimate wind action

δ = values of the serviceability parameter determined on the basis of the design actions

δ_ℓ = limiting value of the serviceability parameter (the subscript 'ℓ' stands for limiting value)

ϕ = capacity reduction factor

ψ_c = combination factor for imposed action

ψ_s = factor for determining frequent values (short-term) of actions

ψ_ℓ = factor for determining quasi-permanent values (long-term) of actions

Accessed by SWINBURNE UNIVERSITY OF TECHNOLOGY on 15 Aug 2007

@Seismicisolation

@Seismicisolation

SECTION 2 STRUCTURAL DESIGN PROCEDURE

2.1 GENERAL

Structural design shall be carried out using the procedure given in Clause 2.2 for ultimate limit states and Clause 2.3 for serviceability limit states.

2.2 ULTIMATE LIMIT STATES

Design for ultimate limit states shall be carried out by the following procedure:

(a) Adopt the importance level for the building or structure and the associated annual probabilities of exceedance for wind, snow and earthquake as follows:

  (i) For Australia—as given in the Building Code of Australia.

  (ii) For New Zealand—as given in Section 3.

(b) Determine the permanent (G) and imposed (Q) loads in accordance with AS/NZS 1170.1.

(c) Determine the ultimate loads for wind (W) in accordance with AS/NZS 1170.2.

(d) Determine the ultimate loads for earthquake (E_u) in accordance with AS 1170.4 as modified by Appendix D of this Standard including the probability factor (k_p) and the changes to earthquake design category.

(e) Determine the ultimate loads for snow (F_{sn}) in accordance with AS 1170.3 as modified by Appendix E of this Standard including the probability factor (k_p).

(f) Where such actions are relevant, determine the ultimate loads for liquid pressure (F_{lp}) ground water (F_{gw}) rainwater ponding (F_{pnd}) and earth pressure loads ($F_{e,u}$) in accordance with AS/NZS 1170.1.

(g) Determine combinations of actions in accordance with Section 4.

(h) Analyse the structure and its parts for the relevant combinations in accordance with Section 5.

(i) Design and detail the structure in accordance with—

  (i) Section 6 for robustness; and

  (ii) for Australia, AS 1170.4 for earthquake.

(j) Determine the design resistance using the applicable Standard or other document. The Building Code of Australia specifies the documents to be used within its jurisdiction.

(k) Confirm that the design resistance exceeds the appropriate action effects in accordance with Section 7.

2.3 SERVICEABILITY LIMIT STATES

Design for serviceability limit states shall be carried out by the following procedure as appropriate:

(a) Determine for the whole structure and for individual elements, the type of design serviceability conditions to be considered.

(b) Determine the design situation including the serviceability load event and serviceability limits for the design serviceability condition being considered (see Section 3 for New Zealand).

NOTE: Guidelines for serviceability events and associated limits are given in Appendix C.

@Seismicisolation

Accessed by SWINBURNE UNIVERSITY OF TECHNOLOGY on 15 Aug 2007

@Seismicisolation

(c) Determine the permanent loads (G) and serviceability imposed loads (Q) in accordance with AS/NZS 1170.1.

(d) Determine serviceability loads for wind (W) in accordance with AS/NZS 1170.2.

(e) Determine serviceability loads for snow (F_{sn}) in accordance with AS 1170.3 as modified by Appendix E of this Standard including the probability factor (k_p).

(f) Where such actions are relevant, determine serviceability loads for liquid pressure (F_{lp}) ground water (F_{gw}) rainwater ponding (F_{pnd}) and earth pressure ($F_{e,u}$) in accordance with AS/NZS 1170.1.

(g) Determine the applicable combinations corresponding to the selected design serviceability conditions in accordance with Section 4.

(h) Model the serviceability response of the structure and its parts for the relevant combinations for each serviceability condition using methods of analysis appropriate for the serviceability limit state in accordance with Section 5.

(i) Determine the serviceability response using the applicable Standard or other document. The Building Code of Australia specifies the documents to be used within its jurisdiction.

(j) Confirm, in accordance with Section 7, that the modelled serviceability response does not exceed the appropriate limiting values for each of the serviceability conditions identified.

Accessed by SWINBURNE UNIVERSITY OF TECHNOLOGY on 15 Aug 2007

@Seismicisolation

@Seismicisolation

SECTION 4 COMBINATIONS OF ACTIONS

4.1 GENERAL

The combinations of actions for use in design of structures shall be as given in this Standard. Other combinations may be required.

4.2 COMBINATIONS OF ACTIONS FOR ULTIMATE LIMIT STATES

4.2.1 Stability

The basic combinations for the ultimate limit states used in checking stability (see Clause 7.2.1) shall be as follows where the long-term and combination factors are given in Table 4.1:

(a) For combinations that produce net stabilizing effects ($E_{d,stb}$):

$E_{d,stb} = [0.9G]$ permanent action only (does not apply to prestressing forces)

(b) For combinations that produce net destabilizing effects ($E_{d,dst}$):

(i) $E_{d,dst} = [1.35G]$ permanent action only (does not apply to prestressing forces)

(ii) $E_{d,dst} = [1.2G, 1.5Q]$ permanent and imposed action

(iv) $E_{d,dst} = [1.2G, W_u, \psi_c Q]$ permanent, wind and imposed action

(v) $E_{d,dst} = [G, E_u, \psi_c Q]$ permanent, earthquake and imposed action

(vi) $E_{d,dst} = [1.2G, S_u, \psi_c Q]$ permanent action, actions given in Clause 4.2.3 and imposed action

NOTE: Combination factors for prestressing forces are given in the appropriate materials design Standard.

4.2.2 Strength

The basic combinations for the ultimate limit states used in checking strength (see Clause 7.2.2) shall be as follows, where the long-term and combination factors are given in Table 4.1:

(a) $E_d = [1.35G]$ permanent action only (does not apply to prestressing forces)

(b) $E_d = [1.2G, 1.5Q]$ permanent and imposed action

(c) $E_d = [1.2G, 1.5\psi_\ell Q]$ permanent and long-term imposed action

(d) $E_d = [1.2G, W_u, \psi_c Q]$ permanent, wind and imposed action

(e) $E_d = [0.9G, W_u]$ permanent and wind action reversal

(f) $E_d = [G, E_u, \psi_c Q]$ permanent, earthquake and imposed action

(g) $E_d = [1.2G, S_u, \psi_c Q]$ permanent action, actions given in Clause 4.2.3 and imposed action

NOTE: Combination factors for prestressing forces are given in the appropriate materials design Standard.

Accessed by SWINBURNE UNIVERSITY OF TECHNOLOGY on 15 Aug 2007

@Seismicisolation

@Seismicisolation

TABLE 4.1

SHORT-TERM, LONG-TERM AND COMBINATION FACTORS

Character of imposed action	Short-term factor (ψ_s)	Long-term factor (ψ_l)	Combination factor (ψ_c)
Distributed imposed actions, *Q*			
Floors			
Residential and domestic	0.7	0.4	0.4
Offices	0.7	0.4	0.4
Parking	0.7	0.4	0.4
Retail	0.7	0.4	0.4
Storage	1.0	0.6	0.6
Other	1.0	0.6	0.6
Roofs			
Roofs used for floor type activities (see AS/NZS 1170.1)	0.7	0.4	0.4
All other roofs	0.7	0.0	0.0
Concentrated imposed actions (including balustrades), *Q*			
Floors	1.0	0.6	as for distributed floor actions
Floors of domestic housing	1.0	0.4	
Roofs used for floor type activities	1.0	0.6	
All other roofs	1.0	0.0	0.0
Balustrades	1.0	0.0	0.0
Long-term installed machinery, tare weight	1.0	1.0	1.2

4.2.3 Combinations for snow, liquid pressure, rainwater ponding, ground water and earth pressure

Where appropriate to the design situation, the basic combinations shall be modified for the action of liquid pressure, ground water and earth pressure by the use of the following factored values:

(a) $S_u = F_{sn}$ for snow determined in accordance with AS 1170.3 as modified by Appendix E.

(b) Where the liquid type and density is well defined and design liquid height cannot be exceeded—

(i) $S_u = 1.2\ F_{lp}$ for static liquid pressure; and

(ii) for self-weight of stored liquid, use the factor for permanent action

(c) Where liquid type or density is not well defined or design liquid height is not limited—

(i) $S_u = 1.5\ F_{lp}$ for static liquid pressure; and

(ii) for self-weight of stored liquid, use the factor for imposed action.

(d) $S_u = 1.2\ F_{pnd}$ for rainwater ponding where the water level is as given in AS/NZS 1170.1.

Accessed by SWINBURNE UNIVERSITY OF TECHNOLOGY on 15 Aug 2007

@Seismicisolation

@Seismicisolation

(e) $S_u = 1.2\ F_{gw}$ for ground water where the ground water level is as given in AS/NZS 1170.1, otherwise $S_u = 1.5\ F_{gw}$.

(f) For earth pressures:

(i) $S_u = 1.0\ F_{e,u}$ when $F_{e,u}$ is determined using an ultimate limit states method.

(ii) $S_u = 1.5\ F_e$ when determined using other methods.

4.2.4 Combinations of actions for fire

The combination of factored actions used when confirming the ultimate limit state for fire shall be as follows:

[G, thermal actions arising from the fire, $\psi_\ell Q$]

NOTE: Where it is appropriate to consider the stability of remaining walls that may collapse outwards after a fire event, other ultimate limit states criteria are given in Section 6.

4.3 COMBINATIONS OF ACTIONS FOR SERVICEABILITY LIMIT STATES

Combinations of actions for the serviceability limit states shall be those appropriate for the serviceability condition being considered. Appropriate combinations may include one or a number of the following using the short-term and long-term values given in Table 4.1:

(a) G

(b) $\psi_s Q$

(c) $\psi_\ell Q$

(d) W_s

(e) E_s

(f) Serviceability values of other actions, as appropriate.

4.4 CYCLIC ACTIONS

When checking structures or elements of structures for fatigue performance under repeated in-service cyclic actions, the level of repeated loading to be used shall be the actual load level expected for the design situation.

Accessed by SWINBURNE UNIVERSITY OF TECHNOLOGY on 15 Aug 2007

@Seismicisolation

@Seismicisolation

SECTION 5 METHODS OF ANALYSIS

5.1 GENERAL

The structural analysis used to determine action effects from loads shall be in accordance with the principles of structural mechanics.

5.2 STRUCTURAL MODELS

The structural model shall reflect the behaviour of the structure for the appropriate limit state being considered.

Structural models, parameters and properties shall be as given in the relevant Australian or New Zealand Standards for design of material for the appropriate limit states.

Modelling shall be based on the following:

(a) Static or dynamic response.

(b) Elastic or non-elastic (plastic) response.

(c) Geometrically linear or geometrically non-linear response.

(d) Time-independent or time-dependent behaviour.

Accessed by SWINBURNE UNIVERSITY OF TECHNOLOGY on 15 Aug 2007

@Seismicisolation

@Seismicisolation

SECTION 6 STRUCTURAL ROBUSTNESS

6.1 GENERAL

General detailing of components of the structural force-resisting system and of other components shall be in accordance with this Section.

Structures shall be detailed such that all parts of the structure shall be tied together both in the horizontal and the vertical planes so that the structure can withstand an event without being damaged to an extent disproportionate to that event.

Clause 6.2 is deemed to satisfy this Clause.

6.2 LOAD PATHS

6.2.1 General

The design of the structure shall provide load paths to the foundations for forces generated by all types of actions from all parts of the structure, including structural and non-structural components. The minimum actions shall be as given in Clauses 6.2.2 to 6.2.5.

6.2.2 Minimum resistance

The structure shall have a minimum lateral resistance equivalent to 2.5 percent of $(G + \psi_c Q)$ for each level, applied simultaneously at each level for a given direction.

The direction of application of the lateral load shall be that which will produce the most critical action effect in the element under consideration, except that the application of this load in more than one direction simultaneously need not be considered in the design of any element.

6.2.3 Minimum lateral resistance of connections and ties

All parts of the structure shall be interconnected. Connections shall be capable of transmitting 5 percent of the value of $(G + \psi_c Q)$ for the connection under consideration.

6.2.4 Diaphragms

Floor and roof diaphragms shall be designed—

(a) to resist required horizontal forces; and

(b) to have ties or struts (where used) able to distribute the required wall anchorage forces.

6.2.5 Walls

Walls shall be connected to the structure to provide horizontal resistance to face loads. The connection between the wall and the structure shall be capable of resisting the forces given in Clause 6.2.3.

Accessed by SWINBURNE UNIVERSITY OF TECHNOLOGY on 15 Aug 2007

@Seismicisolation

@Seismicisolation

SECTION 7 CONFIRMATION METHODS

7.1 GENERAL

It shall be confirmed that all limit states are complied with by consideration of the relevant design situations and load cases, in accordance with Clauses 7.2 and 7.3.

NOTE: Appendix B gives guidance on testing as a means for confirmation.

7.2 ULTIMATE LIMIT STATES

7.2.1 Stability

When considering a limit state of static equilibrium or of gross displacements or deformations of the structure, it shall be confirmed that—

$$E_{d,stb} + R_d \geq E_{d,dst} \qquad \ldots 7.1$$

where

$E_{d,stb}$ = design action effect of stabilizing actions (see Clause 4.2)

R_d = design capacity (equal to ϕR)

$E_{d,dst}$ = design action effect of destabilizing actions

7.2.2 Strength

When considering a limit state of collapse, rupture or excessive deformation of a structure, section, member or connection it shall be confirmed that—

$$R_d \geq E_d \qquad \ldots 7.2$$

where

R_d = design capacity (equal to ϕR)

E_d = design action effect (see Clause 4.2)

7.3 SERVICEABILITY LIMIT STATES

When considering a serviceability limit state, it shall be confirmed that—

$$\delta \leq \delta_\ell \qquad \ldots 7.3$$

where

δ = value of the serviceability parameter determined on the basis of the design actions (see Clause 4.3)

δ_ℓ = limiting value of the serviceability parameter.

NOTE: The limiting value of the serviceability parameter should be determined based on accepted information, unless specific limits are specified for the particular structure being designed. Guidance on acceptable serviceability limits for some typical situations are given in Appendix C.

Accessed by SWINBURNE UNIVERSITY OF TECHNOLOGY on 15 Aug 2007

@Seismicisolation

@Seismicisolation

APPENDIX C

GUIDELINES FOR SERVICEABILITY LIMIT STATES

(Informative)

This Appendix gives guidelines for the serviceability limit states resulting from deformation of complete structures and members of structures under load.

Except where absolute limits are required, it is generally best to deal with deflection design in terms of the individual loads being applied (for example, it is usually preferable to deal with the effects of permanent loads separately from the deflection effects of transient or short-term loads). Unlikely combinations of actions need not be considered and total deflection usually only needs to be considered where absolute clearance limits must be maintained.

Guidance on limits for the design of members for serviceability is given in Table C1. This Table identifies deflection limits related to actions with an annual probability of exceedance of 1/20 (0.05) beyond which serviceability problems have been observed. Such boundaries for acceptance are imprecise and should be treated as a guide only. These limits are not applicable in all situations.

Table C1 is arranged into building elements that could be affected by the structure. For each element several possible control phenomena are prescribed, each of which detail—

(a) the serviceability parameter for which the control is intended;

(b) the action that is to be applied to the structure; and

(c) the acceptable response of the element to that action.

Different deflection limits may apply depending on the phenomenon controlled, and the most stringent appropriate limit should control the design. The environment of the observer influences the tolerance of people to sensory deflection. Where a lot of movement is occurring, the stated sensory limits can often be exceeded without complaint.

Further information is given in the commentary to this Standard.

Accessed by SWINBURNE UNIVERSITY OF TECHNOLOGY on 15 Aug 2007

@Seismicisolation

@Seismicisolation

TABLE C1

SUGGESTED SERVICEABILITY LIMIT STATE CRITERIA

Element	Phenomenon controlled	Serviceability parameter	Applied action	Element response (see Notes 1 and 2)
Roof cladding				
Metal roof cladding	Indentation	Residual deformation	Q = 1 kN	Span/600 but <0.5 mm
	De-coupling	Mid-span deflection	G and $\psi_s Q$	Span/120
Concrete or ceramic roof cladding	Cracking	Mid-span deflection	G and $\psi_s Q$	Span/400
Roof-supporting elements				
Roof members (trusses, rafters, etc.)	Sag	Mid-span deflection	G and $\psi_\ell Q$	Span/300
Roof elements supporting brittle claddings	Cracking	Mid-span deflection	G and $\psi_s Q$ or W_s	Span/400
Ceiling and ceiling supports				
Ceilings with matt or gloss paint finish	Ripple	Mid-span deflection	G	Span/500 (see Note 3)
Ceilings with textured finish	Ripple	Mid-span deflection	G	Span/300
Suspended ceilings	Ripple	Mid-span deflection	G	Span/360
Ceiling support framing	Sag	Mid-span deflection	G	Span/360
Ceilings with plaster finish	Cracking	Mid-span deflection	G and $\psi_s Q$ or W_s	Span/200
Wall elements				
Columns	Side sway	Deflection at top	W_s	Height/500
Portal frames (frame racking action)	Roof damage	Deflection at top	W_s or E_s	Spacing/200 (Note 4)
Lintel beams (vertical sag)	Doors/windows jam	Mid-span deflection	W_s	Span/240 but <12 mm (see Note 5)
Walls—General (face loaded)	Discerned movement	Mid-height deflection	W_s	Height/150
	Impact: soft body (neighbours notice)	Mid-height deflection	Q = 0.7 kN	Height/200 but <12 mm (see Note 6)
	Supported elements rattle	Mid-height deflection	W_s	Height/1000
Walls—Specific claddings (see Note 7):				
Brittle cladding (ceramic) face loaded	Cracking	Mid-height deflection	W_s	Height/500
Masonry walls (in plane)	Noticeable cracking	Deflection at top	W_s or E_s	Height/600
(face loading)	Noticeable cracking	Deflection at top	W_s or E_s	Height/400
Plaster/gypsum walls (in plane)	Lining damage	Mid-height deflection	W_s	Height/300
(face loading)	Lining damage	Mid-height deflection	W_s or E_s	Height/200
Movable partitions (soft body impact)	System damage	Deflection at top	Q = 0.7 kN	Height/160
Glazing systems	Bowing	Mid-span deflection	W_s	Span/400
Windows, facades, curtain walls	Facade damage	Mid-span deflection	W_s or E_s	Span/250
Fixed glazing systems	Glass damage	Deflection	W_s or E_s	2 × glass clearance (see Note 3)
Floors and floor supports				
Beams where line-of-sight is along invert	Sag	Mid-span deflection	G and $\psi_\ell Q$	Span/500 (see Notes 8, 9)
Beams where line-of-sight is across soffit	Sag	Mid-span deflection	G and $\psi_\ell Q$	Span/250
Flooring	Ripple	Mid-span deflection	G and $\psi_\ell Q$	Span/300
Floor joists/beams	Sag	Mid-span deflection	G and $\psi_\ell Q$	Span/300
Floors	Vibration	Static mid-span deflection	Q = 1.0 kN	less than 1 to 2 mm (see Note 10)
Normal floor systems	Noticeable sag	Mid-span deflection	G and $\psi_\ell Q$	Span/400
Specialist floor systems	Noticeable sag	Mid-span deflection	G and $\psi_\ell Q$	Span/600
Floors—Side-sway (acceleration)	Sway	Acceleration at floor	W_s	<0.01 g
Floors—Supporting masonry walls	Wall cracking	Mid-span deflection	G and $\psi_\ell Q$	Span/500
Floors—Supporting plaster lined walls	Cracks in lining	Mid-span deflection	G and $\psi_\ell Q$	Span/300

Accessed by SWINBURNE UNIVERSITY OF TECHNOLOGY on 15 Aug 2007

@Seismicisolation

@Seismicisolation

NOTES:

1 Long-term creep, when present, needs to be included in assessing the long-term deflection of members that are prone to creep. In such cases, the long-term factored occupancy load, $G + \psi_\ell Q$, should be considered for the creep component and the difference between the short-term and long-term factored occupancy load, $(\psi_s - \psi_\ell)Q$ added to account for the incremental short-term deflection.

2 The span or height ratios used in the deflection criteria are the clear spacing between points of support.

3 The deflection limits for ceilings or floors are strongly influenced by the surface finish. Glass is an extreme example where the reflective surfaces amplify apparent bowing as the reflected images move with the surface distortions. Observers are often disturbed by such movements. Ripple effects appear more pronounced when the surface is flat (and has a reflective gloss finish). Textured surfaces tend to disguise ripple effects. Surfaces that extend over a wide expanse reveal both ripple and sag effects when light is reflected from the surface. Where the texture of the surface is unknown, the more stringent criteria of highly reflective surfaces will be conservative.

4 The limiting deflection for portal frame knee deflections is related to the behaviour of the cladding between the 'free portal' and a more rigid plane (typically the end wall of a structure). The deflection limit of such portals is based on the bay spacing and ability of the cladding to withstand in-plane shear distortion.

5 Problems with visually sensed deflections are frequently dependent on the presence of a visual cue for the observer to gauge linearity. Deflection limits are therefore a function of the line of sight of the observer.

6 Walls and partitions require stiffness control to minimise disturbance of elements or people often on the reverse side of the wall or partition (e.g., neighbours beyond inter-tenancy walls). The response of the wall to soft-body impact is greatly influenced by the nature and characteristics of the impacting body. The deflection criteria stated (height/200 from a concentrated load of 0.7 kN at mid-height) has been simplified for ease of application by designers. It is based upon a running person falling against a wall. Internal partitions may be subjected to differential pressures, which result from wind. A net coefficient of 0.5 may be considered appropriate when used in conjunction with the serviceability wind pressures.

7 Often different wall claddings have different tolerances to movement. Some of these have been specifically listed.

8 Where members are pre-cambered, the pre-camber present can be deducted from assessments of sag. Where construction progresses in stages, the incremental permanent action only needs to be considered for sag.

9 Floor sag may result in furniture that rocks or is not firmly seated or drainage surfaces that do not function adequately. Specialist floors are those upon which trolleys may move, sensitive equipment may be installed or special activities (e.g. bowls, etc.) may be undertaken. More restrictive deflection limits may be appropriate is such cases.

10 Floor vibration problems are very complex. Problem floors usually have low levels of elastic damping present. The limiting criteria stated (between 1 and 2 mm under a 1 kN point load) should give a guide as to whether the floor may have vibration problems. When the criterion is not satisfied, a more detailed examination of the dynamic behaviour of the floor may be merited. Where a floor system may be used for group rhythmic activity, such as marching, dancing, concerts, jumping exercises or gymnastics, and has a fundamental frequency of vibration less than 8 Hz, then a specific study of the resonant response should be considered, to demonstrate that the building remains functional.

Accessed by SWINBURNE UNIVERSITY OF TECHNOLOGY on 15 Aug 2007

@Seismicisolation

@Seismicisolation

APPENDIX D

FACTORS FOR USE WITH AS 1170.4—1993

(Normative)

D1 GENERAL

This Appendix shall be applied in conjunction with AS 1170.4—1993, to determine the earthquake loads used with the combinations given in this Standard.

NOTES:

1 This Appendix has been included in order to be able to use the existing AS 1170.4—1993 with the new requirements in Part B1 of the Building Code of Australia. This is the result of the introduction of this Standard (AS/NZS 1170.0) and the placing of policy criteria into the Building Code of Australia. The policy criteria are in the form of importance levels and the associated annual probabilities of exceedance. AS 1170.4—1993 is currently under revision to be published as a Joint Australian/New Zealand Standard.

2 The importance factor (I) has been replaced by the variation of annual probability of exceedance. This is expressed in this Standard by a factor (probability factor, k_p) applied as given in this Appendix to the acceleration coefficient (a). This factor allows for the use of annual probability of exceedance as a means of setting the level of performance. Structure type is replaced by importance level.

D2 NOTATION

The notation in this Appendix has the following meanings:

I = importance factor (as given in AS 1170.4—1993)

a = acceleration coefficient (as given in AS 1170.4—1993)

S = site factor (as given in AS 1170.4—1993)

k_p = probability factor (as given in this Appendix)

D3 COMBINATIONS

The combinations of actions given in this Standard shall take precedence over those given in Clause 1.6 of AS 1170.4—1993.

D4 STRUCTURE TYPES (I, II AND III) AND IMPORTANCE FACTOR (I)

Clause 2.5 and Paragraph A1 shall not be used. The structure types (Types I, II and III) defined in Clause 2.2.3 shall not be used. The value of the importance factor (I as given in Clause 2.5 of AS 1170.4—1993) shall be taken as 1.0 for all cases.

In Clause 6.5.3 replace the words 'Type 1' with the words 'Importance levels 1 and 2'.

NOTE: The importance factor (I) has been replaced by the variation of annual probability of exceedance. This is expressed in this Standard by a factor (probability factor, k_p) applied as given in this Appendix to the acceleration coefficient (a). This factor allows for the use of annual probability of exceedance as a means of setting the level of performance. Structure type is replaced by importance level.

D5 PROBABILITY FACTOR

The probability factor (k_p) for earthquake shall be as set out in Table D1.

Accessed by SWINBURNE UNIVERSITY OF TECHNOLOGY on 15 Aug 2007

@Seismicisolation

@Seismicisolation

TABLE D1

PROBABILITY FACTOR (k_p) FOR EARTHQUAKE

Annual probability of exceedance	k_p
1/100	0.3
1/200	0.6
1/500	1.0
1/800	1.25
1/1000	1.4
1/2000	1.8

D6 EARTHQUAKE LOADS

The earthquake loads shall be determined as set out in AS 1170.4—1993, except that the value of the acceleration coefficient (a) shall be multiplied by the value of k_p as set out in Table D1 for the appropriate annual probability of exceedance for the structure. The adjusted value shall then be used wherever a occurs (in place of the value given by Clause 2.3 of AS 1170.4—1993).

NOTE: For example, assuming the value of acceleration coefficient given in AS 1170.4—1993 is 0.08 (Sydney for example) and the annual probability of exceedance is given as 1/800, then the value of acceleration coefficient to be used in calculating the earthquake load using AS 1170.4—1993 is as follows:

$$k_p \times a = 1.25 \times 0.08 = 0.1.$$

This value is then substituted for a when calculating earthquake effects throughout AS 1170.4—1993.

D7 EARTHQUAKE DESIGN CATEGORY

This Clause shall be used in place of Clause 2.6 in AS 1170.4—1993.

The earthquake design category shall be determined as given in Table D2 for the appropriate value of the product of acceleration coefficient and site factor (aS), the structure classification and the importance level.

TABLE D2

EARTHQUAKE DESIGN CATEGORY

Product of acceleration coefficient and site factor (aS)	Structure classification			
	Domestic structures	General structures		
		Importance level 4	Importance level 3	Importance levels 1 and 2
$aS \geq 0.2$	H3	E	D	C
$0.1 \leq aS < 0.2$	H2	D	C	B
$aS < 0.1$	H1	C	B	A

NOTE: The value of acceleration coefficient to be used in this Table would, of course, be the new factored value calculated in Paragraph D6.

Accessed by SWINBURNE UNIVERSITY OF TECHNOLOGY on 15 Aug 2007

@Seismicisolation

@Seismicisolation

STANDARDS AUSTRALIA/STANDARDS NEW ZEALAND

Australian/New Zealand Standard
Structural design actions

Part 1: Permanent, imposed and other actions

SECTION 1 SCOPE AND GENERAL

1.1 SCOPE

This Standard specifies permanent, imposed, liquid pressure, ground water, rainwater ponding and earth pressure actions to be used in the limit state design of structures and parts of structures.

1.2 APPLICATION

This Standard shall be read in conjunction with AS/NZS 1170.0.

This Standard may be used as a means for demonstrating compliance with the Requirements of Part B1 of the Building Code of Australia.

1.3 DETERMINATION OF DESIGN ACTIONS

For the actions covered by this Standard, values for use in design shall be appropriate for the type of structure or structural element, its intended use and exposure to such actions.

The determination of values in accordance with Sections 2 to 4 shall be deemed to satisfy this Clause.

1.4 REFERENCED DOCUMENTS

The following documents are referred to in this Standard:

AS

1418	Cranes, hoists and winches (all parts)
1657	Fixed platforms, walkways, stairways and ladders—Design, construction and installation
1720	Timber structures
1720.2	Part 2: Timber properties
1735	Lifts, escalators and moving walks (all parts)
2156	Walking tracks
2156.1	Part 1: Classification and signage

AS/NZS

1170	Structural design actions
1170.0	Part 0: General principles
1170.2	Part 2: Wind actions

NZS

4332	Non-domestic passenger lifts and goods lifts

Australian Building Codes Board
Building Code of Australia

Accessed by SWINBURNE UNIVERSITY OF TECHNOLOGY on 15 Aug 2007

@Seismicisolation

@Seismicisolation

1.5 DEFINITIONS

For the purpose of this Standard, the definitions given in AS/NZS 1170.0 and those below apply.

1.5.1 Imposed action

A variable action resulting from the intended use or occupancy of the structure.

1.5.2 Load

The value of a force appropriate to an action.

1.5.3 Permanent action

Action that is likely to act continuously throughout the design working life and for which variations in magnitude with time are small compared with the mean value.

1.5.4 Design working life

Assumed period for which a structure or a structural element is to be used for its intended purpose without major repair being necessary.

1.5.5 Tributary area

The area assumed to be supported by a structural element.

1.5.6 Variable action

Action for which the variation in magnitude with time is neither negligible in relation to the mean value nor monotonic.

1.6 NOTATION

Unless otherwise stated, the notation used in this Standard has the following meaning:

A = tributary area supported by a structural element

$F_{e,u}$ = earth pressure action

F_{gw} = ground water action

F_{lp} = liquid pressure action

F_{pnd} = ponding action

G = permanent action

Q = imposed action

ψ_a = factor for reduction of imposed floor loads due to area

ψ_ℓ = factor for determining quasi-permanent values (long-term) of actions (see AS/NZS 1170.0)

Accessed by SWINBURNE UNIVERSITY OF TECHNOLOGY on 15 Aug 2007

@Seismicisolation

@Seismicisolation

SECTION 2 PERMANENT ACTIONS

2.1 GENERAL

This Section gives permanent actions (*G*) for use in designing structures.

Permanent actions shall be taken to include the self-weight of the following:

(a) The structure.

(b) All other materials incorporated into the structure.

NOTE: This includes walls, floors, roofs, suspended ceilings and other permanent construction, as appropriate.

(c) Permanent equipment including fixtures and fittings.

NOTE: This includes permanently fixed wiring, reticulated services and other permanent equipment as appropriate.

(d) Partitions as given in Clause 2.3.

(e) Stored materials where the resultant actions are consistent with the definition for permanent action.

2.2 CALCULATION OF SELF-WEIGHT

The self-weight of a material shall be calculated from the design dimensions or known dimensions and the unit weight as given in Appendix A.

NOTE: Further information on unit weights of materials is given in AS/NZS 1170.1 Supp 1, Structural design actions—Permanent, imposed and other actions—Commentary (Supplement to AS/NZS 1170.1:2002).

2.3 PROVISION FOR PARTITIONS

The self-weight of permanent partitions shall be calculated for their actual layout.

Structures for which provision is to be made for movable partitions shall be designed for the anticipated weight of the partitions placed in any probable positions but not less than a uniformly distributed permanent load of 0.5 kPa over the area being considered.

2.4 REMOVABLE ITEMS

Consideration shall be given to the actions resulting from the effect of removing those permanent items that are not essential parts of the structure, such as tanks or their contents, stored materials as defined in Clause 2.1(e), service equipment, partitions and similar.

Accessed by SWINBURNE UNIVERSITY OF TECHNOLOGY on 15 Aug 2007

@Seismicisolation

@Seismicisolation

SECTION 3 IMPOSED ACTIONS

3.1 GENERAL

This Section gives imposed actions (*Q*) for use in designing structures. The values of imposed actions provided in this Section are appropriate for use with all of the annual probabilities of exceedance defined in AS/NZS 1170.0.

Actions resulting from construction are not covered in this Standard.

The imposed actions shall be not less than the greater of the following:

(a) The actions resulting from the intended use of the structure.

(b) The imposed actions given in this Section.

NOTE: The imposed actions given in this Section include sufficient allowance for the effects of vertical impact arising from the usual movement of people and shifting of furniture. This allowance does not cover dynamic effects due to highly active crowds. Dynamic effects due to vibrating machinery are covered separately in Clause 3.7.

The distributed and concentrated imposed loads shall be considered separately and design carried out for the most adverse effect.

3.2 CONCENTRATED ACTIONS

A concentrated imposed action shall be applied as follows:

(a) At its known position or where its position is not known, in the position giving the most adverse effect.

(b) Distributed over the actual area of application or if the actual area is not known or otherwise stipulated in Tables 3.1 or 3.2, over an area of not greater than 0.01 m^2 for floors and roofs.

3.3 PARTIAL LOADING

The imposed action shall be considered to be absent from any parts of a structure if its absence will cause more adverse effects on that or any other part. For floor loads, the intensity of the imposed load shall be appropriate to the loaded portion of the area under consideration (see Clause 3.4.2).

For design situations involving wind, earthquake or fire emergency conditions, partial loading of alternate spans of continuous beams or slabs need not be considered.

For partial loading on continuous beams, the span (or two adjacent spans) that contains the effect under consideration shall be loaded with an imposed load intensity, as determined from Clause 3.4.2, appropriate to the tributary area supported by the span (or spans). Other spans that are required to be loaded to cause the most adverse effect shall be assumed to be loaded with a load intensity appropriate to the span multiplied by the long-term factor (ψ_ℓ) given in AS/NZS 1170.0.

3.4 FLOORS

3.4.1 Imposed floor actions

The imposed actions (*Q*) appropriate to the type of activity or occupancy for which the floor area will be used shall be the reference values given in Table 3.1 and Appendix B multiplied by the reduction factor given in Clause 3.4.2.

Accessed by SWINBURNE UNIVERSITY OF TECHNOLOGY on 15 Aug 2007

@Seismicisolation

@Seismicisolation

Areas in residential, social, commercial, industrial and administration structures are divided into seven categories, according to their type of activity or occupancy, as shown in Column 1 of Table 3.1.

NOTE: The philosophy of the Table is that each area of a floor is associated with one of the activity types. Thus in order to classify an area under consideration, the design must consider the type of activities that occur in that area.

TABLE 3.1

REFERENCE VALUES OF IMPOSED FLOOR ACTIONS

Type of activity/occupancy for part of the building or structure	Specific uses	Uniformly distributed actions kPa	Concentrated actions kN
A Domestic and residential activities (also see Category C)			
A1 Self-contained dwellings	General areas, private kitchens and laundries in self-contained dwellings	1.5	1.8[(1)]
	Balconies, and roofs used for floor type activities, in self-contained dwellings—		
	(a) less than 1 m above ground level	1.5	1.5 kN/m run along edge
	(b) other	2.0	1.8[(1)]
	Stairs[(2)] and landings in self-contained dwellings	2.0	2.7
	Non-habitable roof spaces in self-contained dwellings	0.5	1.4
A2 Other	General areas, bedrooms, hospital wards, hotel rooms, toilet areas	2.0	1.8[(1)]
	Communal kitchens	3.0	2.7
	Balconies, and roofs used for floor type activities, with community access	same as areas providing access but not less than 4.0	1.8
B Offices and work areas not covered elsewhere	Operating theatres, X-ray rooms, utility rooms	3.0	4.5
	Work rooms (light industrial) without storage	3.0	3.5
	Offices for general use	3.0	2.7[(3)]
	Communal kitchens	3.0	2.7
	Commercial/institutional kitchens	5.0	4.5
	Laundries	3.0	4.5
	Laboratories	3.0	4.5
	Factories, workshops and similar buildings (general industrial)	5.0	4.5
	Balconies, and roofs used for floor type activities	same as areas providing access but not less than 4.0	1.8
	Fly galleries (in theatres, etc.)	4.5 kN/m run uniformly distributed over the width	—
	Grids (over the area of proscenium width by stage depth)	2.8	—

(*continued*)

Accessed by SWINBURNE UNIVERSITY OF TECHNOLOGY on 15 Aug 2007

@Seismicisolation

@Seismicisolation

TABLE 3.1 (*continued*)

Type of activity/occupancy for part of the building or structure	Specific uses	Uniformly distributed actions kPa	Concentrated actions kN
C Areas where people may congregate			
C1 Areas with tables	Public, institutional and communal dining rooms and lounges, cafes and restaurants[5]	2.0	2.7
	Reading rooms with no book storage	2.5	4.5
	Classrooms	3.0	2.7
C2 Areas with fixed seats[6]	Institutional assembly areas such as classrooms, lecture theatres and similar	3.0	2.7
	Public assembly areas such as public halls, theatres, courts of law, auditoria, conference centres and similar	4.0	2.7
	Places of worship	4.0	2.7
C3 Areas without obstacles for moving people	Corridors, hallways, aisles, stairs[2], landings[2], concourses, terraces, plazas, etc., not subject to wheeled vehicles	4.0	4.5
	Corridors, hallways, aisles, stairs[2], landings[2], etc. subject to wheeled vehicles, trolleys, etc.	5.0	4.5
	Footpaths, terraces and plazas at ground level subject to wheeled vehicles	5.0	31[4]
	Museum floors and art galleries for exhibition purposes	4.0	4.5
	Balconies, and roofs used for floor type activities	same as areas providing access but not less than 4.0	1.8
C4 Areas with possible physical activities (see Note to Clause 3.1(b))	Dance halls and studios, gymnasia	5.0	3.6
	Drill halls and drill rooms	5.0	9.0
C5 Areas susceptible to overcrowding (see Note to Clause 3.1(b))	Assembly areas without fixed seating (concert halls, bars, vestibules, public lounges, places of worship, shopping malls) and grandstands	5.0	3.6
	Stages in public assembly areas	7.5	4.5
D Shopping areas	Shop floors for the sale and display of merchandise	4.0	3.6

(*continued*)

Accessed by SWINBURNE UNIVERSITY OF TECHNOLOGY on 15 Aug 2007

@Seismicisolation

@Seismicisolation

TABLE 3.1 (*continued*)

Type of activity/occupancy for part of the building or structure	Specific uses	Uniformly distributed actions kPa	Concentrated actions kN
E Warehousing and storage areas. Areas subject to accumulation of goods. Areas for equipment and plant	Reading rooms with book storage, e.g. libraries	4.0	4.5
	General storage other than those specified	2.4 for each metre of storage height	7.0
	Free rolling office compactus, for general filing, up to 2 m high	3.0 for each metre of storage height	to be calculated
	File rooms, office storage space, vaults and strongrooms	5.0	4.5
	Stack rooms (books)	3.3 for each metre in storage height	7.0
	Paper storage for printing plants and stationery stores, packed book storage	4.0 for each metre of storage height	9.0
	Mobile stacking, mechanically operated heavy shelving (wheels on rails, e.g. compactus)	4.0 for each metre of storage height but not less than 10.0	to be calculated
	Cold storage	4.5 for each metre of storage height but with a minimum of 15.0	9.0
	Plant rooms, fan rooms, etc., including weight of machinery	5.0	4.5
	Areas around equipment in boiler rooms (weight of equipment to be determined)	5.0	4.5
F Light vehicle traffic areas	Parking, garages, driveways and ramps restricted to cars, light vans, etc., not exceeding 2500 kg gross mass.	2.5	13(7)
G Medium vehicle traffic areas	Vehicles exceeding 2500 kg and not exceeding 10 000 kg. Driveways, ramps, repair workshops, footpaths with vehicle access, and car parking	5.0	31(4)

NOTES:

1 The concentrated load shall be applied over an area of 350 mm2 for calculation of punching or crushing.

2 Where a stair tread or landing is structurally independent of the adjoining elements, it shall be capable of withstanding a line load of 2.2 kN/m of span of tread or landing.

3 A concentrated load of 6.7 kN shall be used where a general allowance for safes is made.

4 The concentrated load shall be applied over an area of 0.025 m2 for calculation of punching or crushing.

5 Where these same areas may be subjected to loads due to physical activities or overcrowding (for example a hotel dining room used as a dance floor), imposed loads shall be based on occupancy C4 or C5, as appropriate.

6 Fixed seating is seating where the removal of the seating and the use of the space for other purposes is not likely.

7 For domestic garages with timber floors, this may be reduced to 9 kN applied over an area of 0.3 m × 0.3 m.

Accessed by SWINBURNE UNIVERSITY OF TECHNOLOGY on 15 Aug 2007

@Seismicisolation

@Seismicisolation

3.4.2 Reduction of uniformly distributed imposed actions

The reduction factor (ψ_a) shall be as follows:

(a) ψ_a = 1.0 for the following:

(i) Areas covered by activity or occupancy types C3, C4 and C5 (see Table 3.1).

(ii) Storage areas on which imposed floor actions exceed 5 kPa.

(iii) Light and medium traffic areas (activity or occupancy types F and G).

(iv) Imposed actions from machinery and equipment for which specific design allowance has been made.

(v) One-way slabs.

(b) $\psi_a = 0.3 + \dfrac{3}{\sqrt{A}}$ but not greater than 1.0 and not less than 0.5.

where

A = sum of all areas supported by a structural element, in square metre, for which reduction is not restricted under Clause 3.4.2(a)

3.5 ROOFS AND SUPPORTING ELEMENTS

3.5.1 Roofs

Values for the imposed actions appropriate to roofs shall be as given in Table 3.2 except that roofs used for floor type activities (including activity types A, B, C, D, E, F and G) are treated as floors and values shall be as given in Table 3.1.

Roofs not accessible except for normal maintenance, repair, painting and minor repairs are divided into the following categories:

(a) R1—Street awnings or roof areas where it is practical for limited numbers of people to gain access either from adjacent openable windows, awnings, balconies or roofs or from the ground only.

(b) R2—Other roofs, either flat or pitched as follows:

(i) Structural elements supporting the cladding.

(ii) Roof cladding inclusive of any associated protective mesh, or similar, which is required to support actions incidental to maintenance.

(iii) Surfaces (including transparent surfaces) over which supports (e.g., boards or ladders) are required to be laid to support actions incidental to maintenance (e.g., people).

Accessed by SWINBURNE UNIVERSITY OF TECHNOLOGY on 15 Aug 2007

@Seismicisolation

@Seismicisolation

TABLE 3.2

REFERENCE VALUES OF ROOF ACTIONS

Type of activity/occupancy for part of the building or structure	Specific uses	Uniformly distributed actions kPa	Concentrated actions kN
R1 Street awnings (including cladding)	Accessible from adjacent windows, roofs or balconies	1.5	1.8
	Accessible only from ground level	1.0	1.8
R2 Other roofs	(i) Structural elements	(1.8/*A*+0.12) but not less than 0.25 (see Notes 1 and 2)	1.4
	(ii) Cladding providing direct support	As for structural elements	1.1
	(iii) Surfaces over which boards or ladders are required to be laid	—	0.5

NOTES:

1 Structural elements supporting more than 200 m^2 of roof area shall be designed to support 0.25 kPa on the 200 m^2 of the supported area that gives the worst effect.

2 *A* = the plan projection of the surface area of roof supported by the member under analysis, in square metres.

3.5.2 Roof trusses, ceilings, skylights and similar structures

Where the bottom chords of roof trusses, joists and hangers for ceilings, ribs of skylights, frames and coverings of ceiling access hatches and any similar structure are required to support the force imposed by a person for any purpose, they shall be designed to support a 1.4 kN concentrated load.

Where the structural element is not required to support a person before the cladding is in place, and there is headroom of less than 1.2 m after installation of the cladding, the concentrated action may be reduced to 0.9 kN.

NOTE: This Standard no longer includes the 4.5 kN occasional load on exposed trusses and beams (for industrial, commercial and farm buildings) that was required in AS 1170.1—1989. If provision for such loads is required, the loads should be given in the specification for the building.

3.6 BARRIERS

Barriers, including parapets, balustrades and railings, together with members and connections that provide structural support, shall be designed to sustain the imposed actions given in Table 3.3. The top edge or handrail shall also be designed for the case where a concentrated load of 0.6 kN, positioned for the worst effect, acts inward, outward or downward.

The uniformly distributed line load and the uniformly distributed and concentrated loads applicable to the infill are not additive. They shall be considered as three separate load cases.

Actions due to wind or earthquake need not be assumed to act concurrently with the loads given in Table 3.3.

NOTE: For design of barriers for wind effects, information is given in AS/NZS 1170.2.

Accessed by SWINBURNE UNIVERSITY OF TECHNOLOGY on 15 Aug 2007

@Seismicisolation

@Seismicisolation

TABLE 3.3

MINIMUM IMPOSED ACTIONS FOR BARRIERS

Type of occupancy for part of the building or structure		Specific uses	Top edge			Infill	
			Horizontal kN/m	Vertical kN/m	Inwards, outwards or downwards kN	Horizontal kPa	Any direction kN
A	**Domestic and residential activities**	All areas within or serving exclusively one dwelling including stairs, landings, etc. but excluding external balconies and edges of roofs (see C3)	0.35	0.35	0.6	0.5	0.25
		Other residential, (see also C)	0.75	0.75	0.6	1.0	0.5
B, E	**Offices and work areas not included elsewhere including storage areas**	Light access stairs and gangways not more than 600 mm wide	0.22	0.22	0.6	N/A	N/A
		Fixed platforms, walkways, stairways and ladders for access (see Note)	0.35	0.35	0.6	N/A	N/A
		Areas not susceptible to overcrowding in office and institutional buildings also industrial and storage buildings	0.75	0.75	0.6	1.0	0.5
C	**Areas where people may congregate**						
C1/C2	Areas with tables or fixed seating	Areas with fixed seating adjacent to a balustrade, restaurants, bars, etc.	1.5	0.75	0.6	1.5	1.5
C3	Areas without obstacles for moving people and not susceptible to over-crowding	Stairs, landings, external balconies, edges of roofs, etc.	0.75	0.75	0.6	1.0	0.5
C5	Areas susceptible to over-crowding	Theatres, cinemas, grandstands, discotheques, bars, auditoria, shopping malls (see also D), assembly areas, studios, etc.	3.0	0.75	0.6	1.5	1.5
D	**Retail areas**	All retail areas including public areas of banks/building societies, (see C5 for areas where overcrowding may occur)	1.5	0.75	0.6	1.5	1.5

(*continued*)

Accessed by SWINBURNE UNIVERSITY OF TECHNOLOGY on 15 Aug 2007

@Seismicisolation

@Seismicisolation

TABLE 3.3 (*continued*)

Type of occupancy for part of the building or structure	Specific uses	Top edge			Infill	
		Horizontal kN/m	Vertical kN/m	Inwards, outwards or downwards kN	Horizontal kPa	Any direction kN
F/G Vehicular	Pedestrian areas in car parks including stairs, landings, ramps, edges of internal floors, footways, edges of roofs	1.5	0.75	0.6	1.5	1.5
	Horizontal loads imposed by vehicles	See Clause 3.8				

NOTE: This usage (under B, E) is for access to and safe working at places normally used by operating, inspection, maintenance and servicing personnel.

3.7 ACTIONS FROM INSTALLED CRANES, HOISTS, LIFTS AND MACHINERY

3.7.1 General

Actions resulting from acceleration of masses in installed cranes, hoists, lifts and other machinery shall be treated as additional imposed loads.

The imposed loads used for the design of structures supporting such loads shall be—

(a) provided by the manufacturer of that machinery based on an appropriate dynamic assessment; or

(b) derived from AS 1418, AS 1735 or NZS 4332, as applicable.

In the absence of such information, the factors given in Clauses 3.7.2 and 3.7.3 shall be used.

3.7.2 Vertical actions

For the design of elements supporting lifts, cranes and machinery, the static vertical actions and their appropriate dynamic factors shall be as given in Table 3.4.

TABLE 3.4

DYNAMIC FACTORS FOR VERTICAL ACTIONS

Machinery	Dynamic factor	Element being designed	Action being considered
Lifts	2.0	Supports	Weight of moving components
Travelling cranes: Electric overhead cranes Hand-operated cranes	 1.25 1.1	Gantry girders and their connections	Static wheel loads
Non-reciprocating machinery (e.g., light machinery, shaft or motor driven)	1.2	Supports	Weight of the machinery
Reciprocating machinery (e.g., compressors) or power-driven units (e.g., piston engines)	1.5	Supports	Weight of the machinery

Accessed by SWINBURNE UNIVERSITY OF TECHNOLOGY on 15 Aug 2007

@Seismicisolation

@Seismicisolation

3.7.3 Horizontal actions on crane rails

3.7.3.1 *General*

The horizontal imposed actions specified in Clauses 3.7.3.2 and 3.7.3.3 shall be considered as acting at the rail head level, acting together.

Gantry girders and their vertical supports shall be designed on the basis that either of the horizontal imposed actions specified in Clauses 3.7.3.2 or 3.7.3.3 can act at the same time as the vertical load given in Clause 3.7.2.

3.7.3.2 *Transverse to rails*

The horizontal imposed actions, acting transverse to crane rails shall be taken as the static wheel load resulting from the combined weight of the crab and the load lifted, multiplied by the following factors:

(a) For electric overhead cranes ..... 0.2.

(b) For hand-operated cranes ..... 0.05.

3.7.3.3 *Parallel to rails*

Horizontal imposed actions acting along the rails shall be taken as the static wheel loads that can occur on the rails, multiplied by the following factors:

(a) For electric overhead cranes ..... 0.1.

(b) For hand-operated cranes ..... 0.05.

3.7.3.4 *Buffer actions*

The loads applied to the structure shall be calculated in accordance with AS 1418.

3.8 CAR PARKS

Braking and horizontal impact forces arising from the movement of vehicles shall be treated as additional imposed actions. The imposed braking action shall be half the static load imposed by the gross mass of the vehicle.

The horizontal imposed action on barriers required to withstand the accidental impact from vehicles during parking shall be taken as follows:

(a) For light traffic areas (Type F as given in Table 3.1):

  (i) Barriers ..... 30 kN.

  (ii) Barriers at the end of straight ramps exceeding 20 m in length and intended for downward travel ..... 240 kN.

(b) For barriers in medium traffic areas (Type G as given in Table 3.1) ..... 40 kN.

The impact force shall be distributed over a 1.5 m length at any position along the barrier and shall be assumed to act at 0.5 m above floor level for light traffic areas and at 1.0 m for medium traffic areas.

NOTE: Guidance for situations not covered in this Clause is given in AS/NZS 1170.1 Supp 1, Structural design actions—Permanent, imposed and other actions—Commentary (Supplement to AS/NZS 1170.1:2002).

Accessed by SWINBURNE UNIVERSITY OF TECHNOLOGY on 15 Aug 2007

@Seismicisolation

@Seismicisolation

3.9 GRANDSTANDS

Grandstands, stadiums, assembly platforms, reviewing stands, and similar, shall be designed to withstand horizontal imposed actions, in addition to the imposed actions given in Clause 3.4. Horizontal imposed actions due to crowd movement shall be taken as follows:

(a) For platforms with seats, the following separate load cases (not applied simultaneously), applied at floor level at each row of seats—

  (i) 350 N per linear metre of seating along the line of the seats; and

  (ii) 150 N per linear metre of seating perpendicular to the line of the seats.

(b) For platforms without seats 250 N per square metre of plan area (0.25 kPa).

The imposed actions of this Clause need not be applied simultaneously to the required earthquake action.

Accessed by SWINBURNE UNIVERSITY OF TECHNOLOGY on 15 Aug 2007

@Seismicisolation

@Seismicisolation

APPENDIX A

UNIT WEIGHTS OF MATERIALS

(Normative)

This Appendix gives unit weights of materials for use in calculating self-weight of parts of structures and stored materials.

NOTE: Further information on unit weights of materials is given in AS/NZS 1170.1 Supp 1, Structural design actions—Permanent, imposed and other actions—Commentary (Supplement to AS/NZS 1170.1:2002).

TABLE A1

UNIT WEIGHTS OF MATERIALS AND CONSTRUCTION

Material	Weight per cubic metre kN/m^3
Aluminium	26.7
Asphalt	21.2
Bitumen	10 to 14
Brass	83.5
Concrete, dense aggregate, un-reinforced (add 0.6 for each 1% by volume of steel reinforcement)	24.0
Copper	86.3
Cork	
—normal	1.7
—compressed	3.7
Fibre cement sheet	
—uncompressed	14.2
—compressed	17.2
—fire resistant lining sheet	9.1
—insulating sheet	6.9
Glass—window (soda-lime)	25.5
Granite, basalt, trachyte	26.4
Iron, cast	70.7
Granite, basalt, trachyte	26.4
Iron, cast	70.7
Lead	111
Limestone	
—dense	24.5
—Mt. Gambier	12.5
Marble	26.4
Sandstone	22.5
Steel	76.9
Timbers, at 12% moisture content (see also AS 1720.2)	
Pine (Radiata) (Australian)	5.3
(New Zealand)	4.6
Cypress (Australian)	7.0
Douglas fir	5.5
Hoop	5.3
Blackbutt	8.7

(*continued*)

Accessed by SWINBURNE UNIVERSITY OF TECHNOLOGY on 15 Aug 2007

@Seismicisolation

@Seismicisolation

TABLE A1 (*continued*)

Material	Weight per cubic metre kN/m^3
Grey gum	10.6
Grey ironbark	11
Jarrah	8
Spotted gum	10
Tallowwood	10
Turpentine	9.5
White mahogany	9.5
Vic ash	6.3
Zinc	70.0

TABLE A2

BUILDING MATERIALS AND CONSTRUCTION

Material or construction		Force/unit area kN/m^2
Ceilings		
Fibrous plaster, 10 mm thick		0.09
Gypsum plaster, 13 mm thick		0.13
Lime plaster, 13 mm thick		0.24
Portland cement plaster, 13 mm thick		0.29
Suspended metal lath and gypsum plaster	FRL—1 h	0.25
	FRL—2 h	0.50
	No fire rate	0.15
Floors		
Asphalt, 25 mm thick		0.53
Cinder-concrete filling, 25 mm thick		0.43
Clay tiling, 13 mm thick		0.27
Compressed fibre cement sheet, 15 mm thick		0.23
Magnesium oxychloride—		
normal (sawdust filler), 25 mm thick		0.35
heavy duty (mineral filler), 25 mm thick		0.53
Terrazzo paving, 16 mm thick		0.43
Roofs		
Fibre cement, corrugated sheeting—		
6 mm thick, (standard corrugations)		0.11
6 mm thick, incl. lap and fastenings		0.13
6 mm thick, (deep corrugations)		0.12
6 mm thick, incl. lap and fastenings		0.16
Fibre-cement shingles		0.22
Bituminous felt (5-ply) and gravel		0.43
Metal, troughed sheeting other than given elsewhere		Actual mass to be determined
Acrylic resin sheet, corrugated—		
3 mm thick, standard corrugations		0.04
3 mm thick, deep corrugations		0.06
Slates—10 mm thick		0.70
Steel sheet, flat galvanized, per mm thickness		0.08

(*continued*)

Accessed by SWINBURNE UNIVERSITY OF TECHNOLOGY on 15 Aug 2007

@Seismicisolation

@Seismicisolation

TABLE A2 (*continued*)

Material or construction	Force/unit area kN/m^2
Steel, galvanized standard corrugated sheeting—	
1.00 mm, incl. lap and fastenings	0.12
0.80 mm, incl. lap and fastenings	0.10
0.60 mm, incl. lap and fastenings	0.08
0.50 mm, incl. lap and fastenings	0.05
Tiles—	
Terracotta (French pattern)	0.57
Concrete	0.53
Zinc sheet per 10 mm thick	0.76
Walls and partitions (see Note 1)	
Acrylic resin sheet, flat, per 1.0 mm of thickness	0.01
Autoclaved aerated concrete block masonry—100 mm thick	0.05 to 0.065
Fibre cement sheet—	
4.5 mm thick	0.07
6.0 mm thick	0.11
Fibre-cement compressed decking 15 mm thick	0.26
Fibre-cement sheet—fire resistant	
lining sheet, 9 mm thick	0.08
insulating sheet, 15 mm thick	0.10
Brick masonry, solid—	
burnt clay, per 10 mm of thickness	0.19
calcium silicate (sand-lime), per 10 mm of thickness	0.18
Concrete hollow block masonry (see Note 2)—	
Standard aggregate:	
90 mm thick	1.45
140 mm thick	1.83
190 mm thick	2.10
Lightweight aggregate:	
90 mm thick	1.20
140 mm thick	1.51
190 mm thick	1.82
Fibre insulation board, per 100 mm of thickness (see Note 3)	0.34
Fibrous plaster board, per 100 mm of thickness	0.92
Hardboard, per 100 mm of thickness	0.96
Particle or flakeboard, per 100 mm of thickness	0.66
Plaster board, per 100 mm of thickness	0.76
Plaster	
Portland cement, per 10 mm of thickness	0.23
Lime, per 10 mm of thickness	0.19
Gypsum, per 10 mm of thickness	0.17
Plywood	0.4–1.2
PVC homopolymer sheet, per 10 mm of thickness	0.15

NOTES:

1 Mass of masonry includes mass of mortar but not mass of render or plaster, or mass of absorbed rainwater.

2 For mass of fire-rated masonry refer to manufacturer.

3 For most of the boards, values in Column 2 are given only for the given thickness of board. For other thicknesses, proportional values may be taken.

Accessed by SWINBURNE UNIVERSITY OF TECHNOLOGY on 15 Aug 2007

@Seismicisolation

@Seismicisolation

APPENDIX B

OTHER IMPOSED ACTIONS

(Normative)

This Appendix gives values of imposed actions for some other specific uses. For all the specific uses given in this Appendix, the reduction factor (ψ_a) shall be taken as 1.0.

Table B1 includes values for the following:

(a) Non-habitable structures exposed to the weather in areas that are—

(i) isolated from vehicular access (accessible only by foot over considerable distances); or

(ii) remote (accessible only by foot where people will have to walk more than 2 days or traverse difficult terrain).

(b) Farm structures (see Notes 1 and 2) that are—

(i) of non-residential occupancy with not more than one person per 30m^2 during normal use;

(ii) associated with and located on land devoted to the practice of farming; and

(iii) used essentially for housing equipment or livestock or for production, storage or processing of produce.

NOTES:

1 Examples include hay sheds, implement sheds, grain and fertilizer stores, coolstores for fruit and vegetables, piggeries, poultry sheds, shearing sheds, farm dairies (milking sheds), greenhouses, farm workshops, fruit packing sheds, egg grading rooms, tobacco curing sheds and garages not attached to the farm residence.

2 Loads due to silos and bunkers are not covered in this Standard.

For the design of walking track structures as defined in AS 2156.1, structures in walking track classifications 3 and 4 shall be designed using the values for isolated structures and in walking track classification 5 using the values for remote structures.

Accessed by SWINBURNE UNIVERSITY OF TECHNOLOGY on 15 Aug 2007

@Seismicisolation

@Seismicisolation

TABLE B1

OTHER IMPOSED ACTIONS

Specific use	Uniformly distributed load kPa	Concentrated load(s) kN
FARM STRUCTURES		
All floors and platforms where a person may stand	As appropriate	1.1
Steps or rungs where a person may stand	—	1.1
Greenhouses	2.5	
Floors for farm animals (machinery and equipment loads must be added):		
Sheep	2.0	
Pigs—		
to 25 kg	1.5	
to 90 kg	2.5	
to 180 kg	3.0	
to 225 kg	3.5	
Dairy cattle—Stall area	3.0	
Poultry—Floor houses	1.0	
Beef cattle—		
calves to 135 kg	2.5	
mature animals	5.0	
Horses	5.0	
Farm machinery—		
normal	7	25 on 0.56 m^2
heavy (vehicles more than 6 t, or loaded farm trailers)	10	
Farm sheds for storage (or calculated load if higher)	5	
WALKING TRACK STRUCTURES (for Australia only)		
Platforms, walkways, stairs and fixed ladders for human use exposed to the weather—		
(a) viewing platforms (subject to groups of people)—		
isolated	4.0	1.4(1)
remote	3.0	1.4(1)
(b) accessways—		
isolated	3.0	1.4(1)
remote	2.0	1.4(1)
Stairways	2.2 kN per metre of step	1.8(1)
Ladders (fixed)	—	1.4(1)
Wire crossings	1.0 kN per metre of wire	1.4
STRUCTURES FOR ACCESS AND WORKING (as described in AS 1657) (see Note 2)		
Floors	2.5	1.1

(*continued*)

Accessed by SWINBURNE UNIVERSITY OF TECHNOLOGY on 15 Aug 2007

@Seismicisolation

@Seismicisolation

TABLE B1 (*continued*)

Specific use	Uniformly distributed load kPa	Concentrated load(s) kN
OTHER LOADS		
Catwalks	—	1.1 at 1.2 m centres
Timber pallets, single layer, with—		
lamb carcases	8.7	
mutton carcases	8.7	
beef in cartons	14.1	
stacked timber pallets (per pallet)	7.2	

NOTES:

1 The concentrated load shall be applied over an area of 350 mm^2 for calculation of punching or crushing.

2 AS 1657 covers fixed platforms, walkways stairways and ladders for access to and working at places normally used by operating, inspection, maintenance and servicing personnel.

Accessed by SWINBURNE UNIVERSITY OF TECHNOLOGY on 15 Aug 2007

@Seismicisolation

@Seismicisolation

STANDARDS AUSTRALIA/STANDARDS NEW ZEALAND

Australian/New Zealand Standard
Structural design actions

Part 2: Wind actions

SECTION 1 GENERAL

1.1 SCOPE

This Standard sets out procedures for determining wind speeds and resulting wind actions to be used in the structural design of structures subjected to wind actions other than those caused by tornadoes.

The Standard covers structures within the following criteria:

(a) Buildings less than 200 m high.

(b) Structures with roof spans less than 100 m.

(c) Structures other than offshore structures, bridges and transmission towers.

NOTES:

1 This Standard is a stand-alone document for structures within the above criteria. It may be used, in general, for all structures but other information may be necessary. Guidance on wind tunnel testing, reliable references and alternative data is given in AS/NZS 1170.2 Supp 1, *Structural design actions—Wind actions—Commentary* (Supplement to AS/NZS 1170.2:2002).

2 Where structures have natural frequencies less than 1 Hz, Section 6 requires dynamic analysis to be carried out (see Section 6).

1.2 APPLICATION

This Standard shall be read in conjunction with AS/NZS 1170.0.

This Standard may be used as a means for demonstrating compliance with the Requirements of Part B1 of the Building Code of Australia.

1.3 REFERENCED DOCUMENTS

The following documents are referred to in this Standard:

AS
4040 Methods of testing sheet roof and wall cladding
4040.3 Part 3: Resistance to wind pressures for cyclone regions

AS/NZS
1170 Structural design actions
1170.0 Part 0: General principles

ISO
2394 General principles on reliability for structures

4354 Wind actions on structures

Australian Building Codes Board
Building Code of Australia

Accessed by SWINBURNE UNIVERSITY OF TECHNOLOGY on 15 Aug 2007

@Seismicisolation

@Seismicisolation

1.4 DETERMINATION OF WIND ACTIONS

Values of wind actions (*W*) for use in design shall be established that are appropriate for the type of structure or structural element, its intended use, design working life and exposure to wind action.

This Clause shall be deemed to be satisfied when wind actions are determined in accordance with the procedures detailed in Section 2, using the values given in this Standard.

1.5 UNITS

Except where specifically noted, this Standard uses the SI units of kilograms, metres, seconds, pascals, newtons and hertz (kg, m, s, Pa, N, Hz).

1.6 DEFINITIONS

Definitions of the terms used in this Standard are given in Appendix A.

1.7 NOTATION

The notation used in this Standard is given in Appendix B.

Accessed by SWINBURNE UNIVERSITY OF TECHNOLOGY on 15 Aug 2007

@Seismicisolation

@Seismicisolation

SECTION 2 CALCULATION OF WIND ACTIONS

2.1 GENERAL

The procedure for determining wind actions (W) on structures and elements of structures or buildings shall be as follows:

(a) Determine site wind speeds (see Clause 2.2).

(b) Determine design wind speed from the site wind speeds (see Clause 2.3).

(c) Determine design wind pressures and distributed forces (see Clause 2.4).

(d) Calculate wind actions (see Clause 2.5).

2.2 SITE WIND SPEED

The site wind speeds ($V_{sit,\beta}$) defined for the 8 cardinal directions (β) at the reference height (z) above ground (see Figure 2.1) shall be as follows:

$$V_{sit,\beta} = V_R\, M_d\, (M_{z,cat}\, M_s\, M_t) \qquad \ldots 2.2$$

where

V_R = regional 3 s gust wind speed, in metres per second, for annual probability of exceedance of 1/R, as given in Section 3

M_d = wind directional multipliers for the 8 cardinal directions (β) as given in Section 3

$M_{z,cat}$ = terrain/height multiplier, as given in Section 4

M_s = shielding multiplier, as given in Section 4

M_t = topographic multiplier, as given in Section 4

Generally, the wind speed is determined at the average roof height (h). In some cases this varies, as given in the appropriate sections, according to the structure.

Where the orientation of a building is not known, the regional wind speed shall be assumed to act from any cardinal direction (i.e. M_d = 1.0 for all directions).

2.3 DESIGN WIND SPEED

The building orthogonal design wind speeds ($V_{des,\theta}$) shall be taken as the maximum cardinal direction site wind speed ($V_{sit,\beta}$) linearly interpolated between cardinal points within a sector ±45 degrees to the orthogonal direction being considered (see Figures 2.2 and 2.3).

NOTE: That is, $V_{des,\theta}$ equals the maximum value of site wind speed ($V_{sit,\beta}$) in the range [$\beta = \theta \pm 45$ degrees] where β is the cardinal direction clockwise from true North and θ is the angle to the building orthogonal axes.

In cases such as walls and hoardings and lattice towers, where an angle of 45° is considered, $V_{des,\theta}$ shall be the value of $V_{sit,\beta}$ in a sector ±22.5° from the 45° direction being considered.

For ultimate limit states design, $V_{des,\theta}$ shall not be less than 30 m/s.

NOTE: A conservative approach is to design the structure using the wind velocity and multipliers for the worst direction. For example, for a building on an escarpment, it may be easily checked whether the $V_R\, M_d\, (M_{z,cat}\, M_s\, M_t)$ on the exposed face (towards the escarpment) is the worst case. To simplify design, this value could then be used as the design wind speed for all directions on the building.

Accessed by SWINBURNE UNIVERSITY OF TECHNOLOGY on 15 Aug 2007

@Seismicisolation

@Seismicisolation

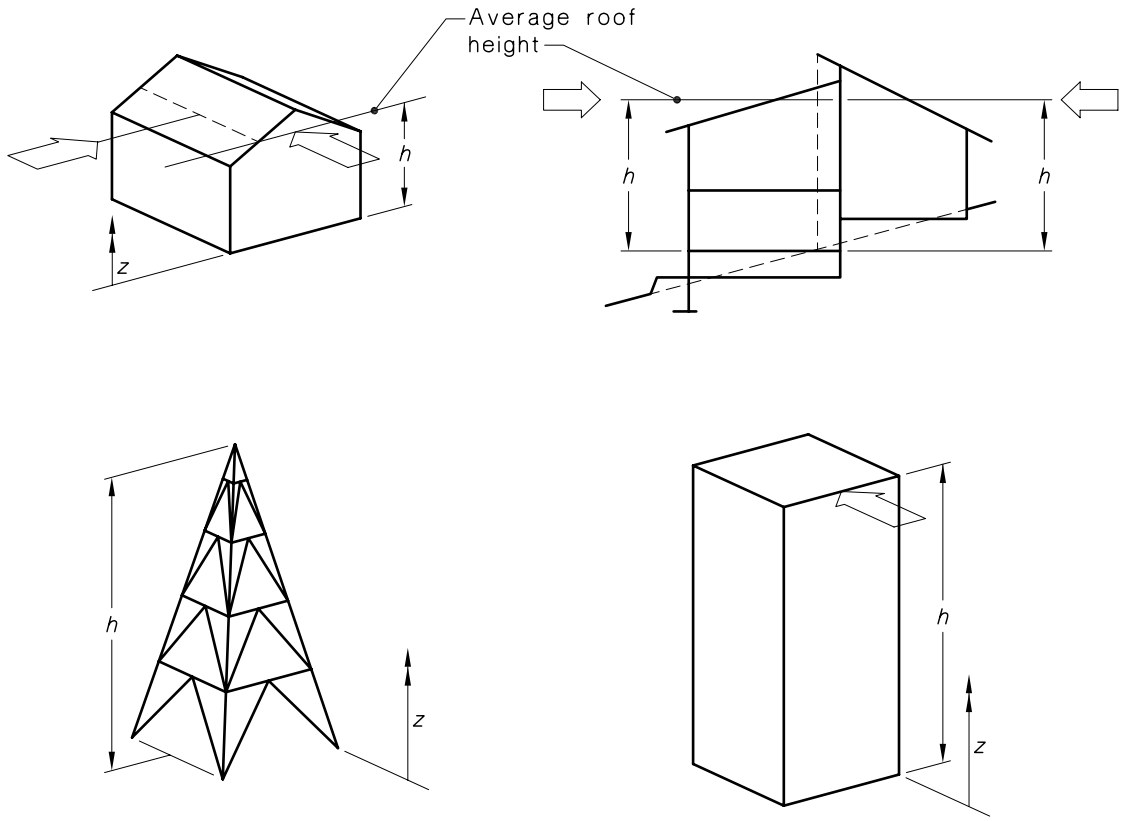

FIGURE 2.1 REFERENCE HEIGHT OF STRUCTURES

Accessed by SWINBURNE UNIVERSITY OF TECHNOLOGY on 15 Aug 2007

@Seismicisolation

@Seismicisolation

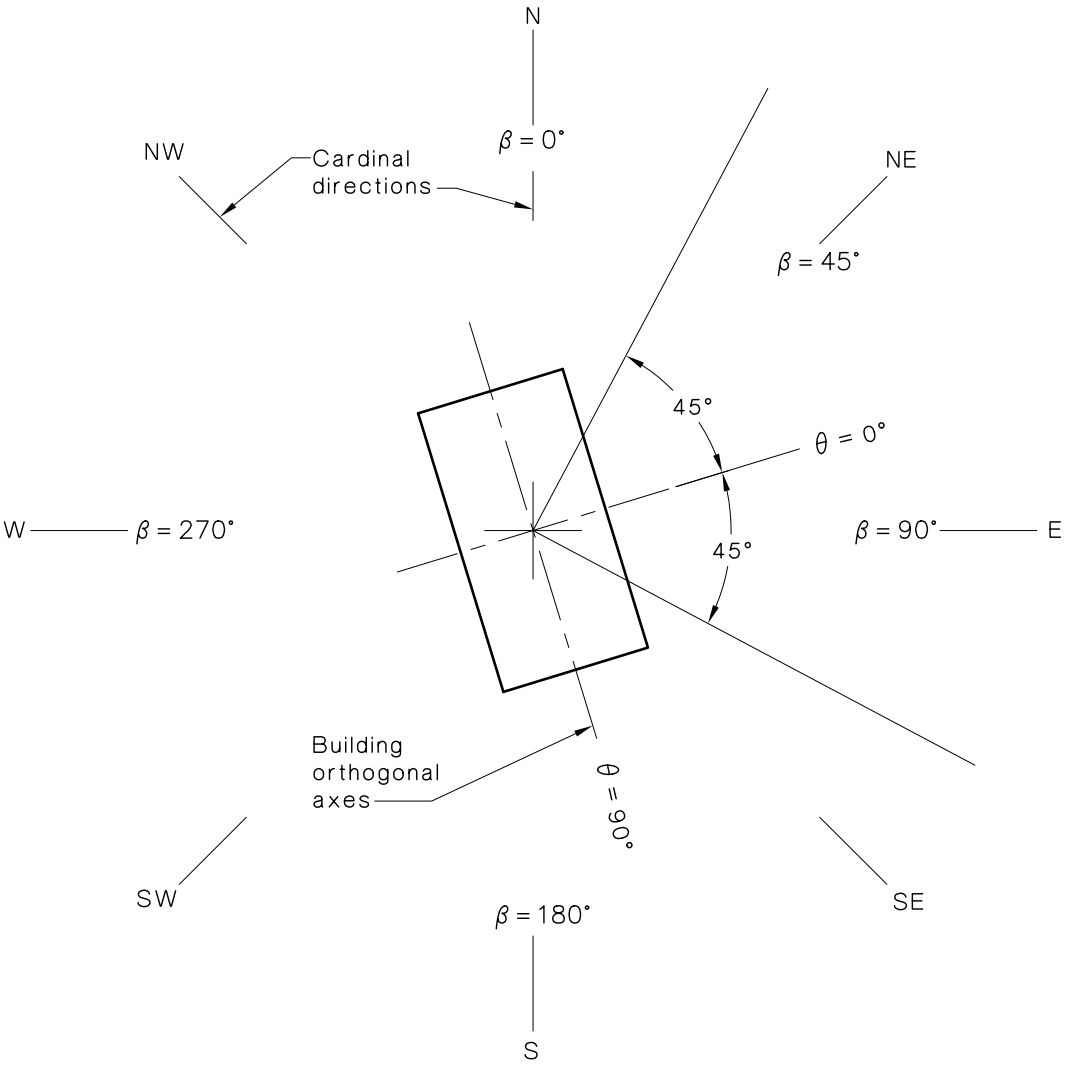

FIGURE 2.2 RELATIONSHIP OF WIND DIRECTIONS AND BUILDING ORTHOGONAL AXES

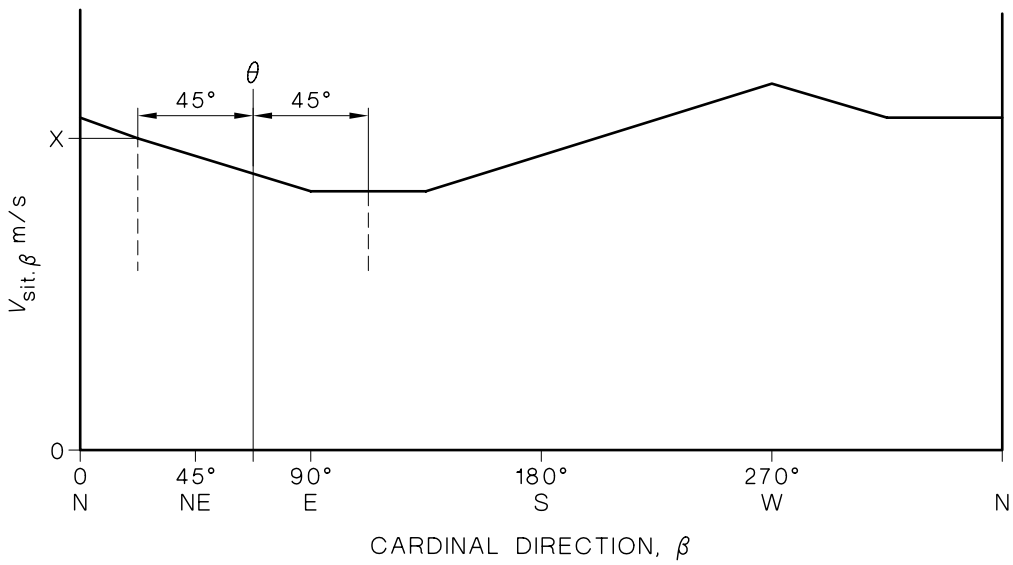

NOTE: The value of $V_{des,\theta}$ is the maximum of $V_{sit,\beta}$ in the range θ ±45 degrees, which, in the case shown here, is the wind speed X.

FIGURE 2.3 EXAMPLE OF $V_{sit,\beta}$ CONVERSION TO $V_{des,\theta}$

@Seismicisolation

Accessed by SWINBURNE UNIVERSITY OF TECHNOLOGY on 15 Aug 2007

@Seismicisolation

2.4 DESIGN WIND PRESSURE AND DISTRIBUTED FORCES

2.4.1 Design wind pressures

The design wind pressures (p) in pascals, shall be determined for structures and parts of structures as follows:

$$p = (0.5\ \rho_{air})\ [V_{des,\theta}]^2\ C_{fig}\ C_{dyn} \qquad \ldots 2.4(1)$$

where

p = design wind pressure acting normal to a surface, in pascals

= p_e, p_i or p_n where the sign is given by the C_p values used to evaluate C_{fig}

NOTE: Pressures are taken as positive, indicating pressures above ambient and negative, indicating pressures below ambient.

ρ_{air} = density of air, which shall be taken as 1.2 kg/m^3

$V_{des,\theta}$ = building orthogonal design wind speeds (usually, $\theta = 0°$, 90°, 180°, and 270°), as given in Clause 2.3

NOTE: For some applications, $V_{des,\theta}$ may be a single value or may be expressed as a function of height (z) e.g., windward walls of tall buildings (>25m).

C_{fig} = aerodynamic shape factor, as given in Section 5

C_{dyn} = dynamic response factor, as given in Section 6 (the value is 1.0 except where the structure is wind sensitive, see Section 6)

2.4.2 Design wind distributed forces

The design wind frictional drag force per unit area (f) in pascals, shall be taken for structures and parts of structures as follows:

$$f = (0.5\ \rho_{air})\ [V_{des,\theta}]^2\ C_{fig}\ C_{dyn} \qquad \ldots 2.4(2)$$

2.5 WIND ACTIONS

2.5.1 General

Wind actions (W) for use in AS/NZS 1170.0 shall be determined as given in Clauses 2.5.2 to 2.5.5 and accelerations as given in Clause 2.5.6.

2.5.2 Directions to be considered

Wind actions shall be derived by considering wind from no fewer than four orthogonal directions aligned to the structure.

2.5.3 Forces on surfaces or structural elements

2.5.3.1 *Forces derived from wind pressure*

To determine wind actions, the forces (F) in newtons, on surfaces or structural elements, such as a wall or a roof, shall be the vector sum of the forces calculated from the pressures applicable to the assumed areas (A), as follows:

$$F = \Sigma(p_z\ A_z) \qquad \ldots 2.5(1)$$

where

p_z = design wind pressure, in pascals (normal to the surface), at height z, calculated in Clause 2.4.1

NOTE: The sign convention for pressures leads to forces towards the surface for positive pressures and forces away from the surface for negative pressures.

A_z = a reference area, in square metres, at height z, upon which the pressure at that height (p_z) acts

Accessed by SWINBURNE UNIVERSITY OF TECHNOLOGY on 15 Aug 2007

@Seismicisolation

@Seismicisolation

For enclosed buildings, internal pressures shall be taken to act simultaneously with external pressures including the effects of local pressure factors (K_ℓ). The most severe combinations of internal and external pressures shall be selected for design.

Where variations in the surface pressure with height are considered, the area shall be subdivided so that the specified pressures are taken over appropriate areas (see Clause 4.2 for variation of wind speed with height).

2.5.3.2 *Forces derived from frictional drag*

To determine wind actions, the forces (F) in newtons, on a building element, such as a wall or a roof, shall be the vector sum of the forces calculated from distributed frictional pressures applicable to the assumed areas, as follows:

$$F = \sum(f_z A_z) \qquad \text{. . . 2.5(2)}$$

where

f_z = the design frictional distributed force parallel to the surface, calculated in Clause 2.4.2 at height z, in pascals

2.5.3.3 *Forces derived from force coefficients*

Appendices E and F cover structures for which shape factors are given in the form of force coefficients rather than pressure coefficients. In these cases, to determine wind actions, the forces (F) in newtons, shall be determined as follows:

$$F = (0.5\ \rho_{air})\ [V_{des,\theta}]^2\ C_{fig}\ C_{dyn}\ A_{ref} \qquad \text{. . . 2.5(3)}$$

where

A_{ref} = as defined in Appendix F, for flags

= $l \times b$ for other structures or elements of structures covered in Appendices E and F

2.5.4 Forces and moments on complete structures

To determine wind actions, the total resultant forces and overturning moments on complete structures shall be taken to be the summation of the effects of the external pressures on all surfaces of the building.

For rectangular enclosed buildings where the ratio d/h or d/b (see Clause 5.4) is greater than 4, the total resultant force on a complete structure shall include the frictional drag calculated in accordance with Clause 5.5.

For dynamic effects, the combination of along-wind and crosswind responses shall be calculated in accordance with Section 6.

2.5.5 Performance of fatigue-sensitive elements

In regions C and D, cladding, its connections and immediate supporting members shall demonstrate performance under the pressure sequences defined in AS 4040.3, based on the ultimate limit state wind pressure on external and internal surfaces, as determined in accordance with this Standard.

2.5.6 Serviceability of wind-sensitive structures

For the purpose of calculating wind actions for serviceability of wind-sensitive chimneys, masts and poles of circular cross-section (as defined in Clause 6.1), deflections shall be calculated in accordance with Section 6.

NOTE: Information on peak acceleration of other wind-sensitive structures is given in Appendix G.

Accessed by SWINBURNE UNIVERSITY OF TECHNOLOGY on 15 Aug 2007

@Seismicisolation

@Seismicisolation

SECTION 3 REGIONAL WIND SPEEDS

3.1 GENERAL

This Section shall be used to calculate gust wind speeds appropriate to the region in which a structure is to be constructed, including wind direction effects.

3.2 REGIONAL WIND SPEEDS (V_R)

Regional wind speeds (V_R) for all directions based on 3 second gust wind data shall be as given in Table 3.1 for the regions shown in Figure 3.1 where R (average recurrence interval) is the inverse of the annual probability of exceedance of the wind speed. Refer to AS/NZS 1170.0 for information on values of annual probability of exceedance appropriate for the design of structures.

TABLE 3.1

REGIONAL WIND SPEEDS

Regional wind speed (m/s)	Region				
	Non-cyclonic			Cyclonic	
	A (1 to 7)	W	B	C	D
V_5	32	39	28	F_C 33	F_D 35
V_{10}	34	41	33	F_C 39	F_D 43
V_{20}	37	43	38	F_C 45	F_D 51
V_{50}	39	45	44	F_C 52	F_D 60
V_{100}	41	47	48	F_C 56	F_D 66
V_{200}	43	49	52	F_C 61	F_D 72
V_{500}	45	51	57	F_C 66	F_D 80
V_{1000}	46	53	60	F_C 70	F_D 85
V_{2000}	48	54	63	F_C 73	F_D 90
V_R **(see Note)**	$67 - 41R^{-0.1}$	$104 - 70R^{-0.045}$	$106 - 92R^{-0.1}$	$F_C\ (122 - 104R^{-0.1})$	$F_D\ (156 - 142R^{-0.1})$

NOTE: The calculated value shall be rounded to the nearest 1 m/s.

3.3 WIND DIRECTION MULTIPLIER (M_d)

3.3.1 Regions A and W

The wind direction multiplier (M_d) for regions A and W shall be as given in Table 3.2.

3.3.2 Regions B, C and D

The wind direction multiplier (M_d) for all directions in regions B, C and D shall be as follows:

(a) 0.95 for determining the resultant forces and overturning moments on complete buildings and wind actions on major structural elements (members resisting collapse of the whole structure).

(b) 1.0 for all other cases (including cladding).

Accessed by SWINBURNE UNIVERSITY OF TECHNOLOGY on 15 Aug 2007

@Seismicisolation

@Seismicisolation

3.4 FACTORS FOR REGIONS C AND D (F_C, F_D)

The wind speeds given in Table 3.1 for regions C and D include additional factors (F_C and F_D) which shall be as follows:

(a) For ultimate limit states wind speeds, F_D = 1.1.

(b) For ultimate limit states wind speeds, F_C = 1.05.

(c) For serviceability limit states wind speeds, F_C and F_D = 1.0.

NOTE: The frequency of Category 5 cyclone crossings in Region D in the years 1998 to 2002 is much greater than predicted from the historic data on which the wind speeds in this Standard are based. The factors in this Clause have been introduced to allow for uncertainties in the prediction of ultimate design wind speeds in Regions C and D (tropical cyclones regions) when they are based on recorded wind speeds. The values of these factors may be revised in the future following simulations based on recorded cyclone tracks. Such an analysis would naturally include cyclone activity throughout the northern coast of Australia (i.e., in regions C and D). The effects of long-term climate change may also be included.

TABLE 3.2

WIND DIRECTION MULTIPLIER (M_d)

Cardinal directions	Region A1	Region A2	Region A3	Region A4	Region A5	Region A6	Region A7	Region W
N	0.90	0.80	0.85	0.90	1.00	0.85	0.90	1.0
NE	0.80	0.80	0.80	0.85	0.85	0.95	0.90	0.95
E	0.80	0.80	0.80	0.90	0.80	1.0	0.80	0.80
SE	0.80	0.95	0.80	0.90	0.80	0.95	0.90	0.90
S	0.85	0.90	0.80	0.95	0.85	0.85	0.90	1.0
SW	0.95	0.95	0.85	0.95	0.90	0.95	0.90	1.0
W	1.00	1.00	0.90	0.95	1.00	1.0	1.0	0.90
NW	0.95	0.95	1.00	0.90	0.95	0.95	1.0	0.95
Any direction	1.0	1.0	1.0	1.0	1.0	1.0	1.0	1.0

Accessed by SWINBURNE UNIVERSITY OF TECHNOLOGY on 15 Aug 2007

@Seismicisolation

Accessed by SWINBURNE UNIVERSITY OF TECHNOLOGY on 15 Aug 2007
@Seismicisolation

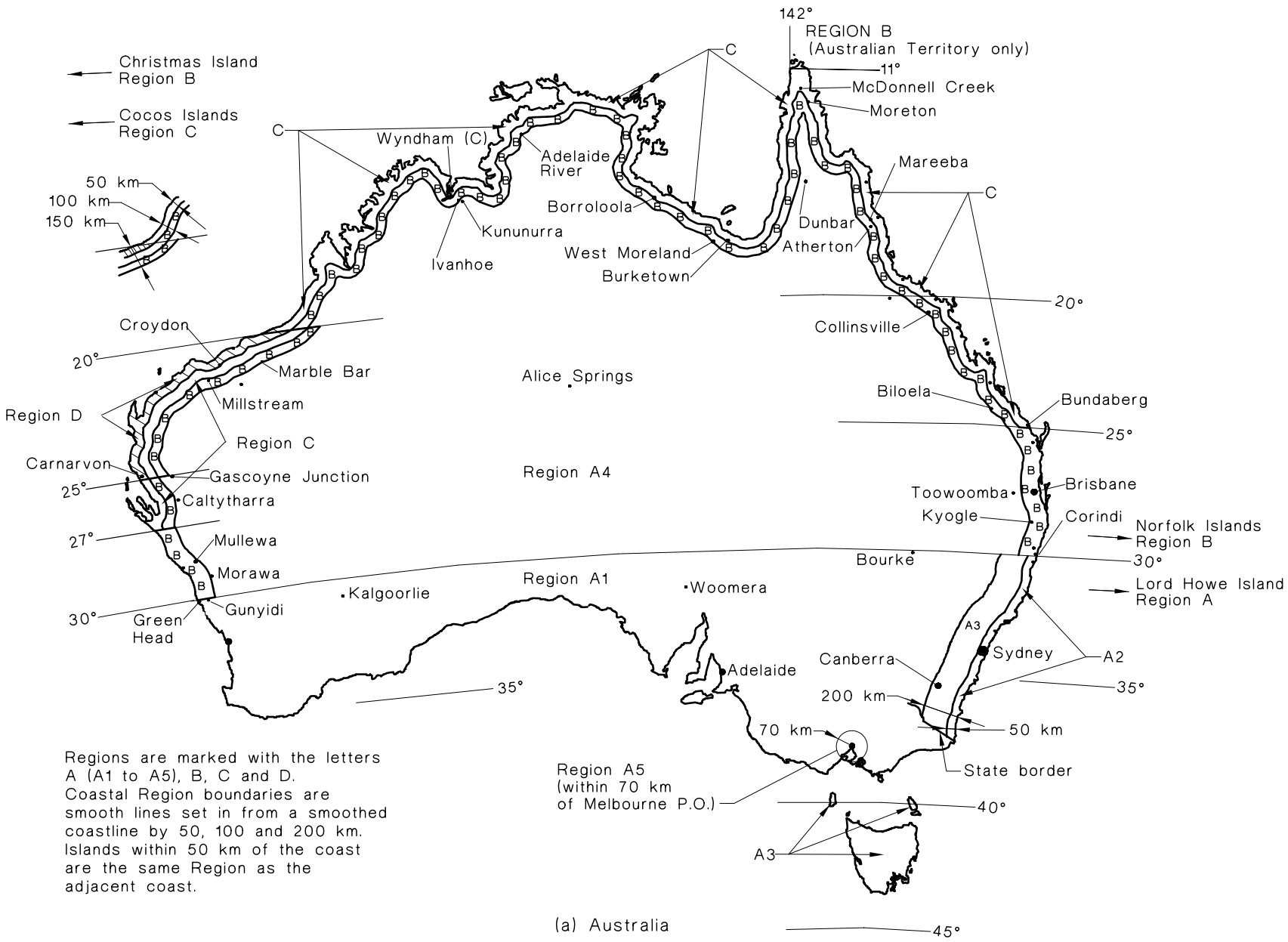

Regions are marked with the letters A (A1 to A5), B, C and D. Coastal Region boundaries are smooth lines set in from a smoothed coastline by 50, 100 and 200 km. Islands within 50 km of the coast are the same Region as the adjacent coast.

(a) Australia

FIGURE 3.1 (in part) WIND REGIONS

@Seismicisolation

@Seismicisolation

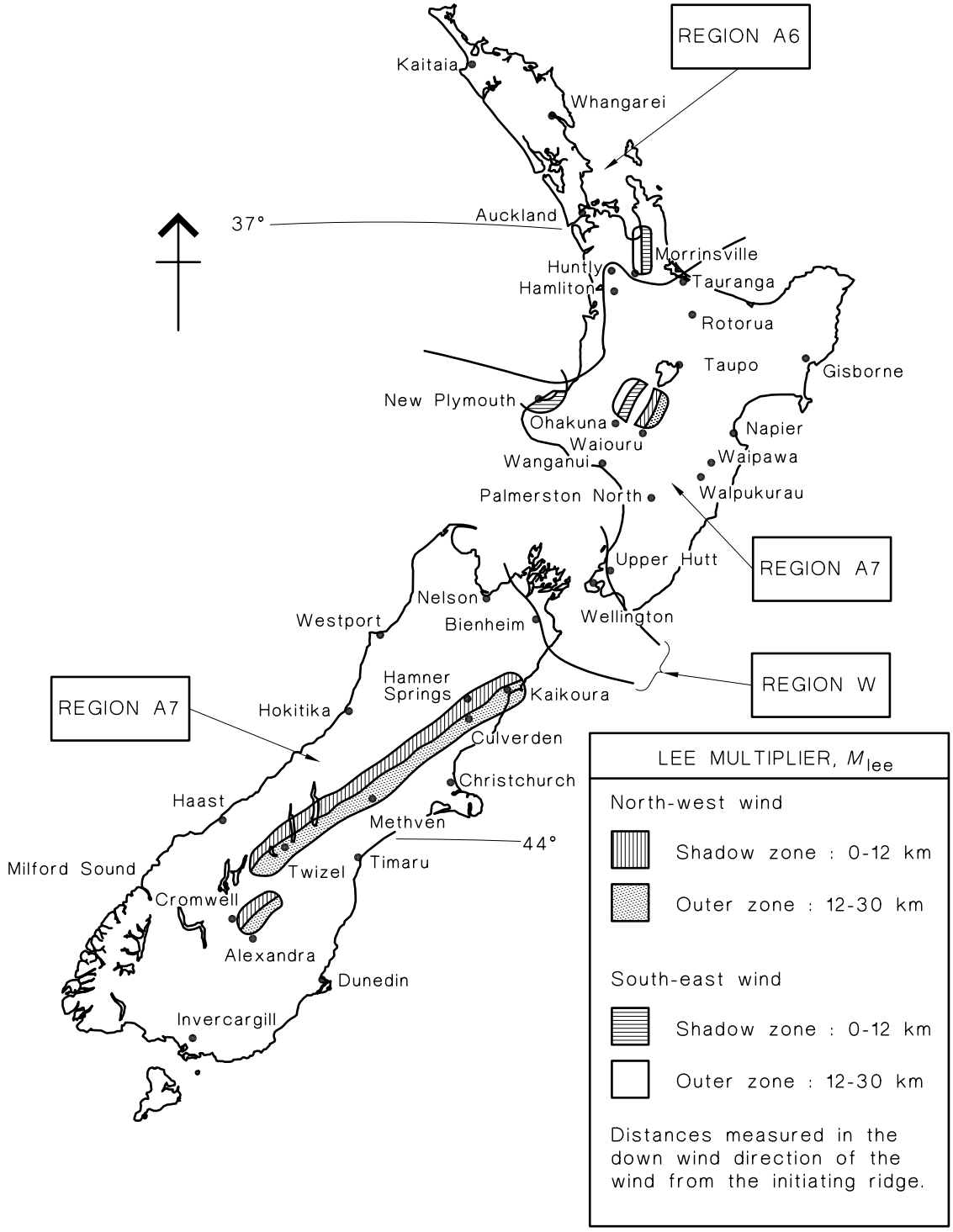

(b) New Zealand

FIGURE 3.1 (in part) WIND REGIONS

Accessed by SWINBURNE UNIVERSITY OF TECHNOLOGY on 15 Aug 2007

@Seismicisolation

@Seismicisolation

SECTION 4 SITE EXPOSURE MULTIPLIERS

4.1 GENERAL

This Section shall be used to calculate the exposure multipliers relating to site conditions related to terrain/height ($M_{z,cat}$), shielding (M_s) and topography (M_t).

The design shall take account of known future changes to terrain roughness when assessing terrain category and to buildings providing shielding when assessing shielding.

4.2 TERRAIN/HEIGHT MULTIPLIER ($M_{z,cat}$)

4.2.1 Terrain category definitions

Terrain, over which the approach wind flows towards a structure, shall be assessed on the basis of the following category descriptions:

(a) *Category 1*—Exposed open terrain with few or no obstructions and water surfaces at serviceability wind speeds.

(b) *Category 2*—Water surfaces, open terrain, grassland with few, well-scattered obstructions having heights generally from 1.5 m to 10 m.

(c) *Category 3*—Terrain with numerous closely spaced obstructions 3 m to 5 m high such as areas of suburban housing.

(d) *Category 4*—Terrain with numerous large, high (10 m to 30 m high) and closely spaced obstructions such as large city centres and well-developed industrial complexes.

Selection of terrain category shall be made with due regard to the permanence of the obstructions that constitute the surface roughness. In particular, vegetation in tropical cyclonic regions shall not be relied upon to maintain surface roughness during wind events.

4.2.2 Determination of terrain/height multiplier ($M_{z,cat}$)

The variation with height (z) of the effect of terrain roughness on wind speed (terrain and structure height multiplier, $M_{z,cat}$) shall be taken from the values for fully developed profiles given in Tables 4.1(A) and 4.1(B). For intermediate values of height and terrain category, use linear interpolation.

Accessed by SWINBURNE UNIVERSITY OF TECHNOLOGY on 15 Aug 2007

@Seismicisolation

@Seismicisolation

TABLE 4.1(A)

TERRAIN/HEIGHT MULTIPLIERS FOR GUST WIND SPEEDS IN FULLY DEVELOPED TERRAINS—SERVICEABILITY LIMIT STATE DESIGN—ALL REGIONS AND ULTIMATE LIMIT STATE—REGIONS A1 TO A7, W AND B

Height (z) m	Terrain/height multiplier ($M_{z,cat}$)			
	Terrain category 1	Terrain category 2	Terrain category 3	Terrain category 4
≤3	0.99	0.91	0.83	0.75
5	1.05	0.91	0.83	0.75
10	1.12	1.00	0.83	0.75
15	1.16	1.05	0.89	0.75
20	1.19	1.08	0.94	0.75
30	1.22	1.12	1.00	0.80
40	1.24	1.16	1.04	0.85
50	1.25	1.18	1.07	0.90
75	1.27	1.22	1.12	0.98
100	1.29	1.24	1.16	1.03
150	1.31	1.27	1.21	1.11
200	1.32	1.29	1.24	1.16
250	1.34	1.31	1.27	1.20
300	1.35	1.32	1.29	1.23
400	1.37	1.35	1.32	1.28
500	1.38	1.37	1.35	1.31

NOTE: For intermediate values of height z and terrain category, use linear interpolation.

TABLE 4.1(B)

TERRAIN/HEIGHT MULTIPLIERS FOR GUST WIND SPEEDS IN FULLY DEVELOPED TERRAINS—ULTIMATE LIMIT STATE DESIGN—REGIONS C AND D ONLY

Height (z) m	Multiplier ($M_{z,cat}$)	
	Terrain categories 1 and 2	Terrain categories 3 and 4
≤3	0.90	0.80
5	0.95	0.80
10	1.00	0.89
15	1.07	0.95
20	1.13	1.05
30	1.20	1.15
40	1.25	1.25
50	1.29	1.29
75	1.35	1.35
≥100	1.40	1.40

NOTE: For intermediate values of height z and terrain category, use linear interpolation.

4.2.3 Changes in terrain category

When considering a direction where the wind approaches across ground with changes in terrain category that lie within the averaging distances given in Table 4.2(A) for structure height, the terrain and structure height multiplier ($M_{z,cat}$) shall be taken as the weighted

Accessed by SWINBURNE UNIVERSITY OF TECHNOLOGY on 15 Aug 2007

@Seismicisolation

@Seismicisolation

average value over the averaging distance upwind of the structure at height z above ground level (see Figure 4.1(a)).

The weighted average of $M_{z,cat}$ shall be weighted by the length of each terrain upwind of the structure allowing for the lag distance at each terrain category change. An example is given in Figure 4.1 (b).

For evaluation at height z, a change in terrain incorporates a lag distance (x_i) given as follows:

$$x_i = z_{0,r}\left[\frac{z}{0.3z_{0,r}}\right]^{1.25} \qquad \ldots 4.2$$

where

x_i = distance downwind from the start of a new terrain roughness to the position where the developed height of the inner layer equals z (lag distance)

$z_{0,r}$ = larger of the two roughness lengths at a boundary between roughnesses, as given in Table 4.2(B)

z = reference height on the structure above the average local ground level

NOTE: Lag distance is not a significant effect for heights less than 15 m.

TABLE 4.2(A)

AVERAGING DISTANCE FOR STRUCTURE HEIGHT

Structure height (m)	Averaging distance upwind of structure (m)
h <50	1000
50 ≤ h <100	2000
100 ≤ h <200	3000
200 ≤ h	4000

TABLE 4.2(B)

ROUGHNESS LENGTHS FOR TERRAIN CATEGORIES

Terrain category	Roughness length (m)
1	0.002
2	0.02
3	0.2
4	2.0

Accessed by SWINBURNE UNIVERSITY OF TECHNOLOGY on 15 Aug 2007

@Seismicisolation

@Seismicisolation

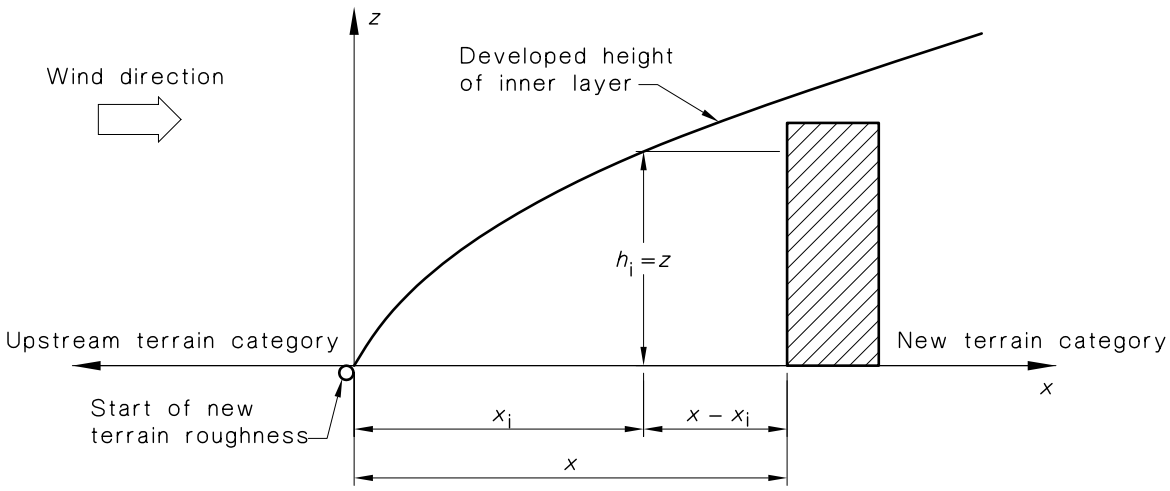

(a) Notation for changes in terrain category

(a) Notation for changes in terrain category

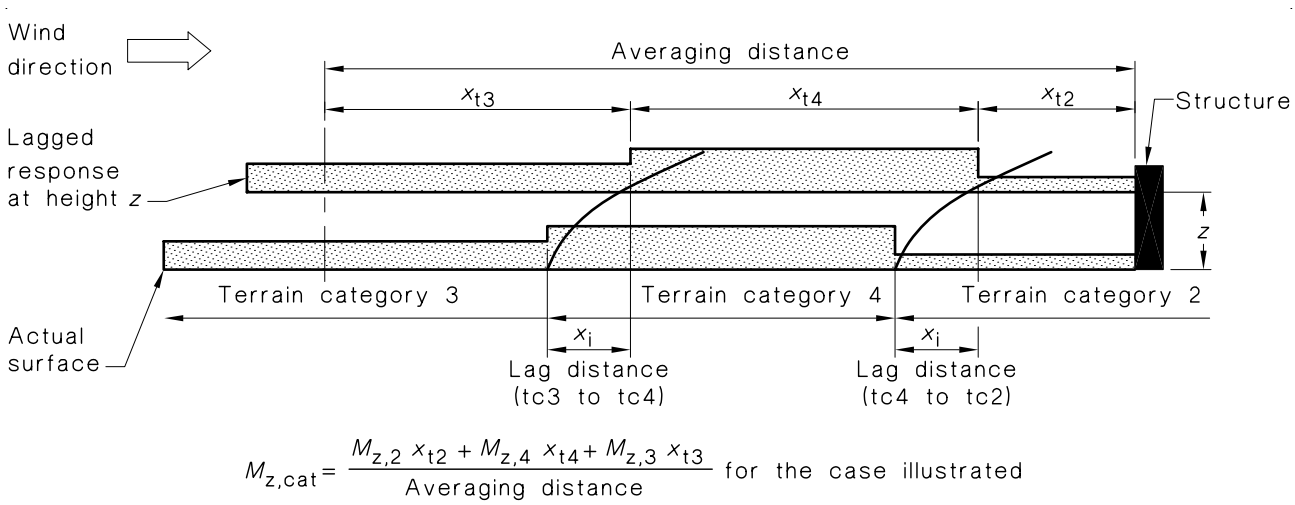

$$M_{z,cat} = \frac{M_{z,2}\, x_{t2} + M_{z,4}\, x_{t4} + M_{z,3}\, x_{t3}}{\text{Averaging distance}} \quad \text{for the case illustrated}$$

(b) Example of changes in terrain category

FIGURE 4.1 CHANGES IN TERRAIN CATEGORY

4.3 SHIELDING MULTIPLIER (M_s)

4.3.1 General

The shielding multiplier (M_s) that is appropriate to a particular direction shall be as given in Table 4.3. The shielding multiplier shall be 1.0 where the average upwind ground gradient is greater than 0.2 or where the effects of shielding are not applicable for a particular wind direction or are ignored.

Accessed by SWINBURNE UNIVERSITY OF TECHNOLOGY on 15 Aug 2007

@Seismicisolation

@Seismicisolation

TABLE 4.3

SHIELDING MULTIPLIER (M_s)

Shielding parameter (s)	Shielding multiplier (M_s)
≤1.5	0.7
3.0	0.8
6.0	0.9
≥12.0	1.0

NOTE: For intermediate values of s, use linear interpolation.

4.3.2 Buildings providing shielding

Only buildings within a 45° sector of radius $20h_t$ (symmetrically positioned about the directions being considered) and whose height is greater than or equal to h_t shall be taken to provide shielding.

4.3.3 Shielding parameter (s)

The shielding parameter (s) in Table 4.3 shall be determined as follows:

$$s = \frac{l_s}{\sqrt{h_s b_s}} \qquad \text{. . . 4.3(1)}$$

where

l_s = average spacing of shielding buildings, given by:

$$= h\left(\frac{10}{n_s} + 5\right) \qquad \text{. . . 4.3(2)}$$

h_s = average roof height of shielding buildings

b_s = average breadth of shielding buildings, normal to the wind stream

h = average roof height, above ground, of the structure being shielded

n_s = number of upwind shielding buildings within a 45° sector of radius $20h$ and with $h_s \geq h$

4.4 TOPOGRAPHIC MULTIPLIER (M_t)

4.4.1 General

The topographic multiplier (M_t) shall be taken as follows:

(a) For sites in New Zealand and Tasmania over 500 m above sea level:

$$M_t = M_h\, M_{lee}\, (1 + 0.00015\, E) \qquad \text{. . . 4.4(1)}$$

where

M_h = hill shape multiplier

M_{lee} = lee (effect) multiplier (taken as 1.0, except in New Zealand lee zones, see Clause 4.4.3)

E = site elevation above mean sea level in meters

Accessed by SWINBURNE UNIVERSITY OF TECHNOLOGY on 15 Aug 2007

@Seismicisolation

@Seismicisolation

(b) Elsewhere, the larger value of the following:

(i) $M_t = M_h$

(ii) $M_t = M_{lee}$

4.4.2 Hill-shape multiplier (M_h)

The hill shape multiplier (M_h) shall be taken as 1.0 except that for the particular cardinal direction in the local topographic zones shown in Figures 4.2 to 4.4, the value shall be as follows:

(a) For $H/(2L_u) < 0.05$, $M_h = 1.0$

(b) For $0.05 \le H/(2L_u) < 0.45$, (see Figures 4.2 and 4.3)

$$M_h = 1 + \left(\frac{H}{(3.5(z + L_1))}\right)\left(1 - \frac{|x|}{L_2}\right) \qquad \ldots 4.4(2)$$

(c) For $H/(2L_u) > 0.45$, (see Figure 4.4)

(i) Within the separation zone (see Figure 4.4)

$$M_h = 1 + 0.71\left[1 - \frac{|x|}{L_2}\right] \qquad \ldots 4.4(3)$$

(ii) Elsewhere within the local topographic zone (see Figures 4.2 and 4.3), M_h shall be as given in Equation 4.4(2)

where

H = height of the hill, ridge or escarpment

L_u = horizontal distance upwind from the crest of the hill, ridge or escarpment to a level half the height below the crest

x = horizontal distance upwind or downwind of the structure to the crest of the hill, ridge or escarpment

L_1 = length scale, in metres, to determine the vertical variation of M_h, to be taken as the greater of 0.36 L_u or 0.4 H

L_2 = length scale, in metres, to determine the horizontal variation of M_h, to be taken as 4 L_1 upwind for all types, and downwind for hills and ridges, or 10 L_1 downwind for escarpments

z = reference height on the structure above the average local ground level

NOTE: Figures 4.2, 4.3 and 4.4 are cross-sections through the structure's site for a particular wind direction.

For the case where x and z are zero, the value of M_h is given in Table 4.4.

Irrespective of the provisions of this Clause, the influence of any peak may be ignored, provided it is distant from the site of the structure by more than 10 times its elevation above sea level.

Accessed by SWINBURNE UNIVERSITY OF TECHNOLOGY on 15 Aug 2007

@Seismicisolation

@Seismicisolation

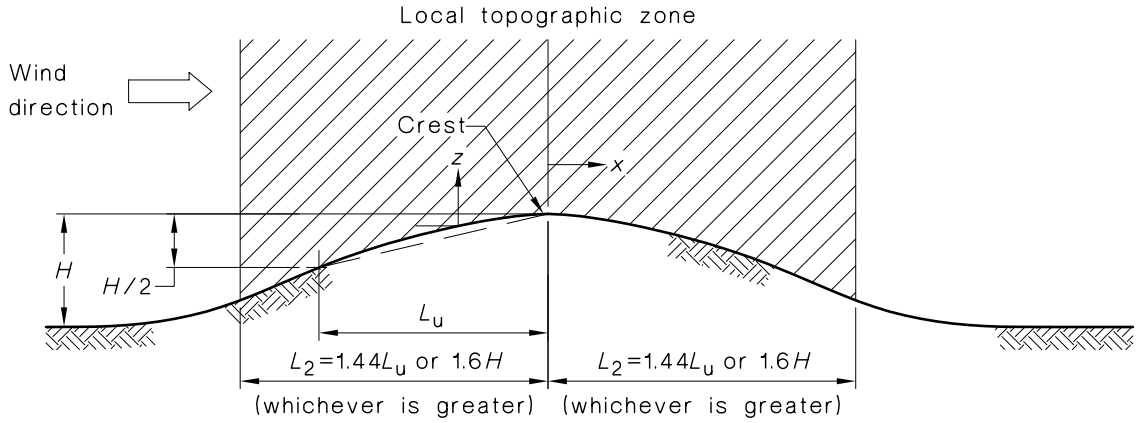

FIGURE 4.2 HILLS AND RIDGES

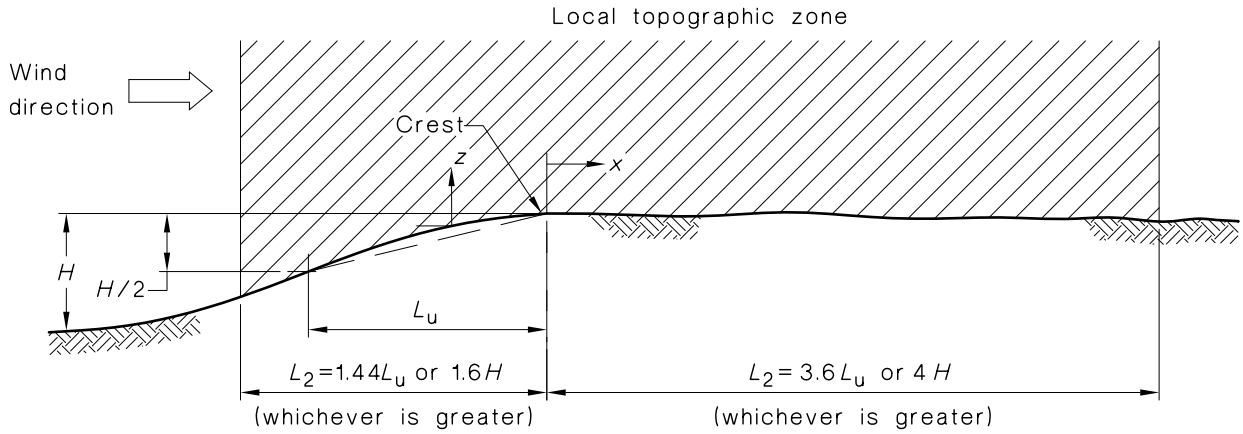

NOTE: For escarpments, the average downwind slope, measured from the crest to a distance of the greater of 3.6 L_u or 4 H shall not exceed 0.05.

FIGURE 4.3 ESCARPMENTS

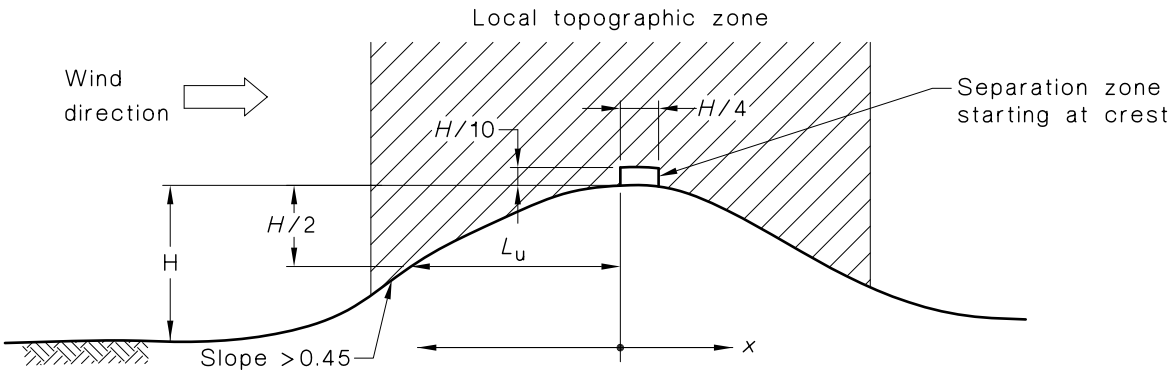

FIGURE 4.4 SEPARATION ZONE FOR SLOPES GREATER THAN 0.44

Accessed by SWINBURNE UNIVERSITY OF TECHNOLOGY on 15 Aug 2007

@Seismicisolation

@Seismicisolation

TABLE 4.4

HILL-SHAPE MULTIPLIER AT CREST $(|x| = 0), z = 0$ (FOR GUST WIND SPEEDS)

Upwind slope ($H/2L_u$)	M_h
<0.05	1.0
0.05	1.08
0.10	1.16
0.20	1.32
0.30	1.48
≥0.45	1.71

4.4.3 Lee multiplier (M_{lee})

The lee (effect) multiplier (M_{lee}) shall be evaluated for New Zealand sites in the lee zones as shown in Figure 3.1(b). For all other sites, the lee multiplier shall be 1.0. Within the lee zones, the lee multiplier shall apply only to wind from the cardinal directions nominated in Figure 3.1(b).

Each lee zone shall be 30 km in width, measured from the leeward crest of the initiating range, downwind in the direction of the wind nominated. The lee zone comprises a 'shadow lee zone', which extends 12 km from the upwind boundary of the lee zone (crest of the initiating range), and an 'outer lee zone' over the remaining 18 km.

The lee multiplier shall be 1.35 for sites within the shadow lee zone (i.e., within 12 km of the crest of the range). Within the outer lee zone, the lee multiplier shall be determined by linear interpolation with horizontal distance, from the shadow/outer zone boundary (where M_{lee} = 1.35), to the downwind lee zone boundary (where M_{lee} = 1.0).

NOTE: No lee zones have been identified in Australia.

Accessed by SWINBURNE UNIVERSITY OF TECHNOLOGY on 15 Aug 2007

@Seismicisolation

@Seismicisolation

SECTION 5 AERODYNAMIC SHAPE FACTOR

5.1 GENERAL

This Section shall be used to calculate the aerodynamic shape factor (C_{fig}) for structures or parts of structures. Values of C_{fig} shall be used in determining the pressures applied to each surface. For calculating pressures, the sign of C_{fig} indicates the direction of the pressure on the surface or element (see Figure 5.1), positive values indicating pressure acting towards the surface and negative values pressure acting away from the surface (less than ambient pressure, i.e., suction). The wind action effects used for design shall be the sum of values determined for different pressure effects such as the combination of internal and external pressure on enclosed buildings.

Clauses 5.3, 5.4 and 5.5 provide values for enclosed rectangular buildings. For the purposes of this Standard, rectangular buildings includes buildings generally made up of rectangular shapes in plan. Methods for particular cases for buildings, free walls, free roofs, exposed members and other structures are given in the appropriate Appendices.

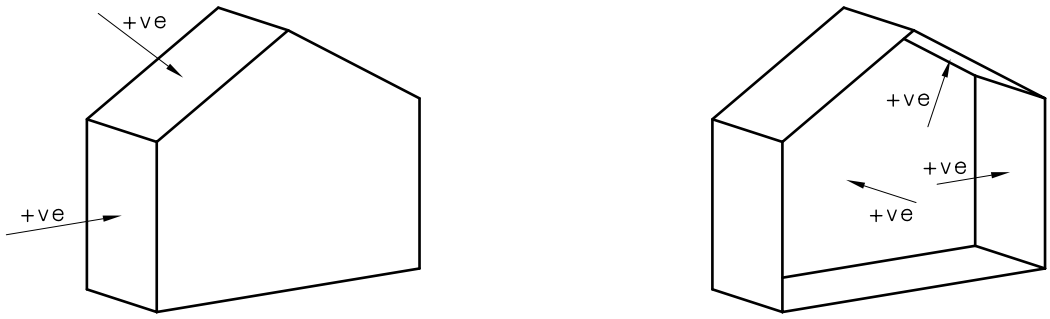

External pressures Internal pressures

NOTE: C_{fig} is used to give a pressure on one face of the surface under consideration. Positive value of C_{fig} indicates pressure acting towards the surface, negative acting away from the surface.

(a) Pressures normal to the surfaces of enclosed buildings

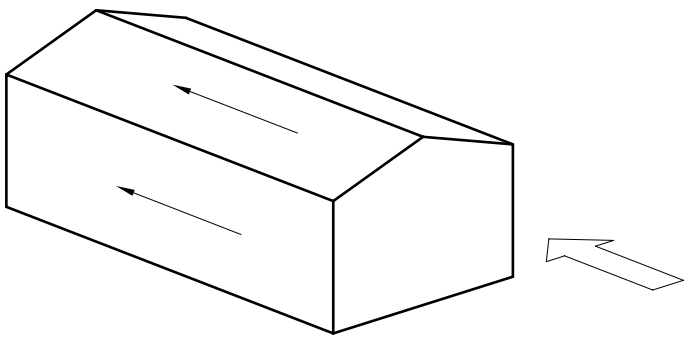

NOTE: C_{fig} is used to give a frictional drag on external surfaces of the structure only. Load per unit area acts parallel to the surface.

(b) Frictional drag on enclosed buildings

Accessed by SWINBURNE UNIVERSITY OF TECHNOLOGY on 15 Aug 2007

@Seismicisolation

@Seismicisolation

FIGURE 5.1 (in part) SIGN CONVENTIONS FOR C_{fig}

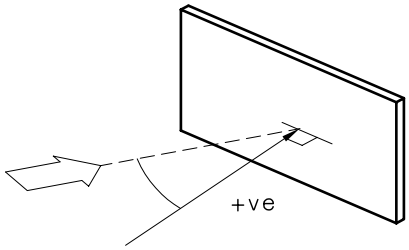

NOTE: C_{fig} is used to give a net pressure normal to the wall derived from face pressures on both upwind and downwind faces. The net pressure always acts normal to the longitudibal axis of the wall.

(c) Pressure normal to the surfaces of walls and hoardings

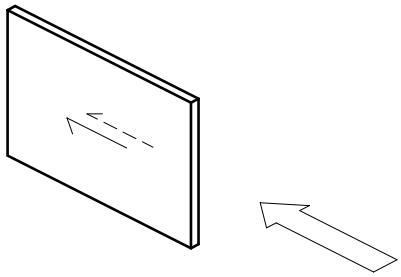

NOTE: C_{fig} is used to give frictional drag on both sides of the wall. Load per unit area acts parallel to both the surfaces of the wall.

(d) Frictional drag on walls and hoardings

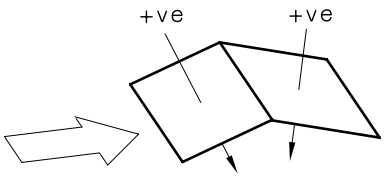

NOTE: C_{fig} is used to give net pressure normal to the roof derived from face pressures on both upper and lower surfaces. The net pressure always acts normal to the surface and positive indicates downwards.

(e) Pressure normal to the surfaces freestanding roofs

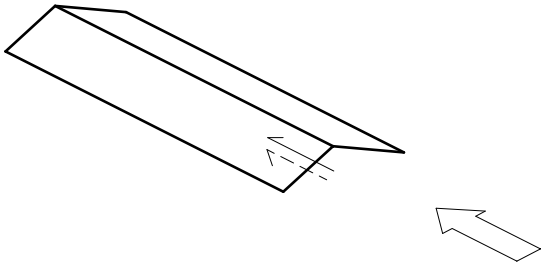

NOTE: C_{fig} is used to give the total frictional drag forces derived from face frictional forces on both upper and lower surfaces. Load per unit area acts parallel to both the surfaces of the roof.

(f) Frictional drag on freestanding roofs

FIGURE 5.1 (in part) SIGN CONVENTIONS FOR C_{fig}

5.2 EVALUATION OF AERODYNAMIC SHAPE FACTOR

The aerodynamic shape factor (C_{fig}) shall be determined for specific surfaces or parts of surfaces as follows:

(a) *Enclosed buildings (see this Section 5 and Appendix C)*—

$C_{fig} = C_{p,e} K_a K_c K_\ell K_p$, for external pressures . . . 5.2(1)

$C_{fig} = C_{p,i} K_c$, for internal pressures . . . 5.2(2)

$C_{fig} = C_f K_c$, for frictional drag forces . . . 5.2(3)

@Seismicisolation

Accessed by SWINBURNE UNIVERSITY OF TECHNOLOGY on 15 Aug 2007

@Seismicisolation

(b) *Circular bins, silos and tanks*—see Appendix C.

(c) *Freestanding walls, hoardings, canopies and roofs (see Appendix D)*—

$C_{fig} = C_{p,n} K_a K_\ell K_p$, for pressure normal to surface . . . 5.2(4)

$C_{fig} = C_f$, for frictional drag forces . . . 5.2(5)

(d) *Exposed structural members, frames and lattice towers*—see Appendix E.

(e) *Flags and circular shapes*—see Appendix F.

where

$C_{p,e}$ = external pressure coefficient

K_a = area reduction factor

K_c = combination factor

K_ℓ = local pressure factor

K_p = porous cladding reduction factor

$C_{p,i}$ = internal pressure coefficient

C_f = frictional drag force coefficient

$C_{p,n}$ = net pressure coefficient acting normal to the surface for canopies, freestanding roofs, walls, and the like

5.3 INTERNAL PRESSURE FOR ENCLOSED RECTANGULAR BUILDINGS

5.3.1 General

Aerodynamic shape factors for internal pressure ($C_{p,i}$) shall be determined from Tables 5.1(A) and 5.1(B). Table 5.1(A) shall be used for the design case where openings are shut and the wall permeability dominates. Table 5.1(B) shall be used for the design case where openings are assumed to be open. In all cases, the height at which the wind speed is determined shall be the average roof height (h).

Internal pressure is a function of the relative permeability of the external surfaces of the building. The permeability of a surface shall be calculated by adding areas of opening to leakage on that surface of the building (e.g., vents, gaps in windows).

5.3.2 Openings

Combinations of openings shall be assumed to give internal pressures, which together with external pressures give the most adverse wind actions. Potential openings include doors, windows and vents.

In regions C and D, internal pressure resulting from the dominant opening shall be applied, unless the building envelope (windows, doors and cladding) can be shown to be capable of resisting impact loading equivalent to a 4 kg piece of timber of 100 mm × 50 mm cross-section, projected at 15 m/s at any angle.

5.3.3 Dominant openings

A surface is considered to contain dominant openings if the sum of all openings in that surface exceeds the sum of openings in each of the other surfaces considered one at a time. This does not include normal surface permeability.

NOTE: A dominant opening does not need to be large and can occur as a result of a particular proposed scenario, such as an open air vent, while all other potential openings are shut.

Accessed by SWINBURNE UNIVERSITY OF TECHNOLOGY on 15 Aug 2007

@Seismicisolation

@Seismicisolation

TABLE 5.1(A)

INTERNAL PRESSURE COEFFICIENTS ($C_{p,i}$) FOR BUILDINGS WITH OPEN INTERIOR PLAN—CASES FOR PERMEABLE WALLS WITHOUT DOMINANT OPENINGS

Condition	$C_{p,i}$	Examples showing openings, permeability and wind direction
One wall permeable, other walls impermeable:		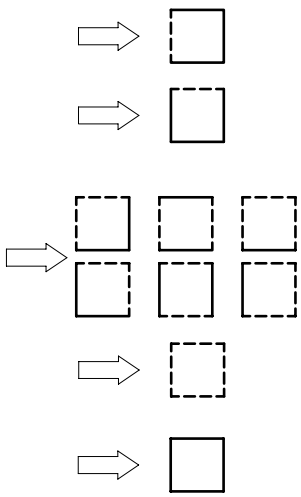
(a) Windward wall permeable	0.6	
(b) Windward wall impermeable	–0.3	
Two or three walls equally permeable, other walls impermeable:		
(a) Windward wall permeable	–0.1, 0.2	
(b) Windward wall impermeable	–0.3	
All walls equally permeable	–0.3 or 0.0, whichever is the more severe for combined forces	
A building effectively sealed and having non-opening windows	–0.2 or 0.0, whichever is the more severe for combined forces	

TABLE 5.1(B)

INTERNAL PRESSURE COEFFICIENTS ($C_{p,i}$) FOR BUILDINGS WITH OPEN INTERIOR PLAN—DOMINANT OPENINGS ON ONE SURFACE

Ratio of dominant opening to total open area (including permeability) of other wall and roof surfaces	Dominant opening on windward wall	Dominant opening on leeward wall	Dominant opening on side wall	Dominant opening on roof
0.5 or less	–0.3, 0.0	–0.3, 0.0	–0.3, 0.0	–0.3, 0.0
1	–0.1, 0.2	–0.3, 0.0	–0.3, 0.0	–0.3, 0.15 $C_{p,e}$
2	0.7 $C_{p,e}$	0.7 $C_{p,e}$	0.7 $C_{p,e}$	0.7 $C_{p,e}$
3	0.85 $C_{p,e}$	0.85 $C_{p,e}$	0.85 $C_{p,e}$	0.85 $C_{p,e}$
6 or more	$C_{p,e}$	$C_{p,e}$	$C_{p,e}$	$C_{p,e}$
	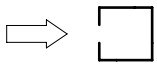	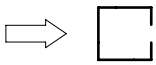	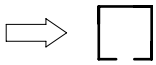	

NOTE: $C_{p,e}$ is the relevant external pressure coefficient at the location of the dominant opening.

Accessed by SWINBURNE UNIVERSITY OF TECHNOLOGY on 15 Aug 2007

@Seismicisolation

@Seismicisolation

5.4 EXTERNAL PRESSURES FOR ENCLOSED RECTANGULAR BUILDINGS

5.4.1 External pressure coefficients ($C_{p,e}$)

The external pressure coefficients ($C_{p,e}$) for surfaces of rectangular enclosed buildings shall be as given in Tables 5.2(A), 5.2(B) and 5.2(C) for walls and 5.3(A), 5.3(B) and 5.3(C) for roofs and for some special roofs in Appendix C. The parameters (e.g. dimensions) referred to in these Tables are set out in Figure 5.2.

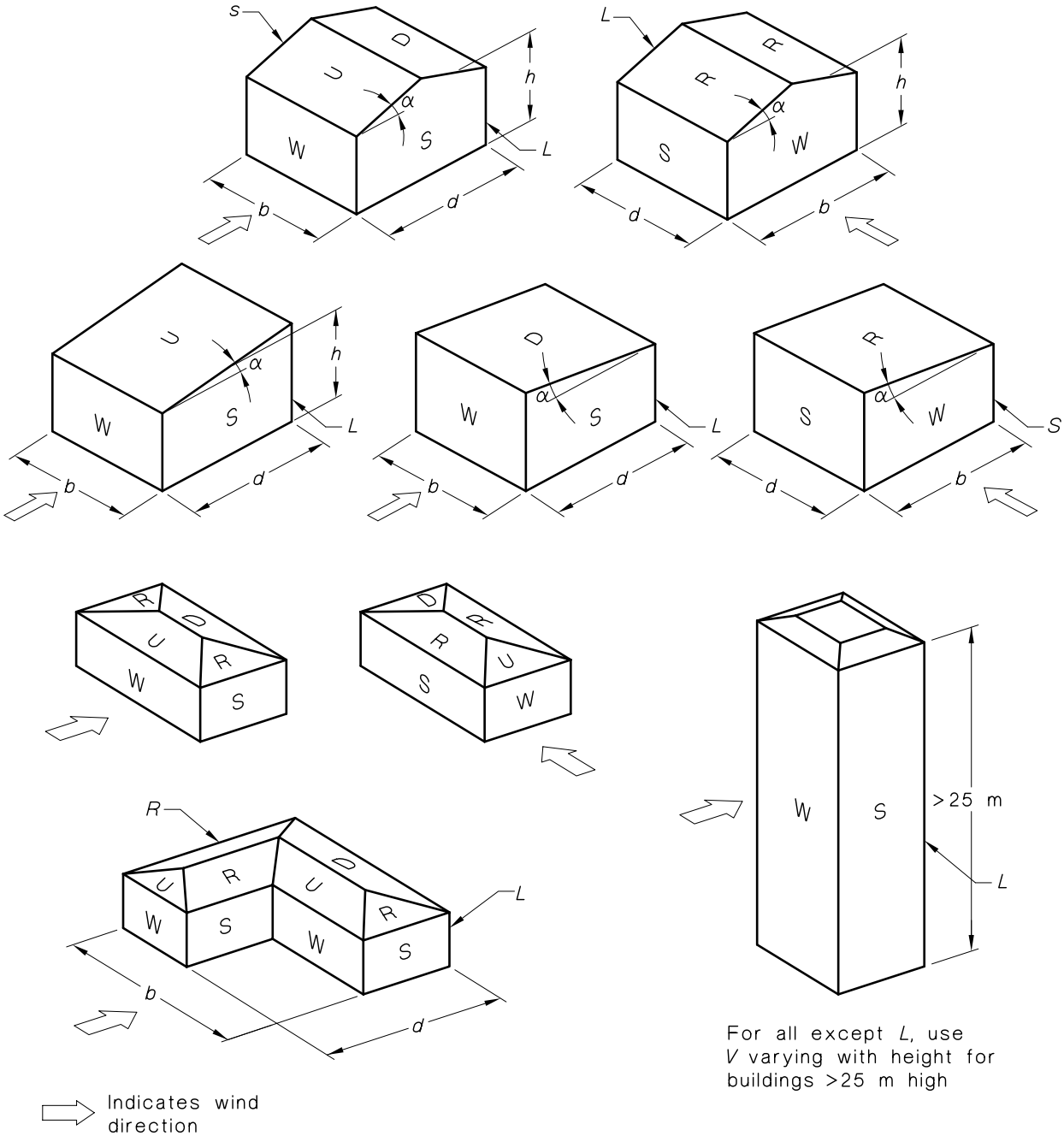

FIGURE 5.2 PARAMETERS FOR RECTANGULAR ENCLOSED BUILDINGS

@Seismicisolation

Accessed by SWINBURNE UNIVERSITY OF TECHNOLOGY on 15 Aug 2007

@Seismicisolation

For leeward walls, side walls and roofs wind speed shall be taken as the value at $z = h$. The reference height (h) shall be taken as the average height of the roof.

Where two values are listed, roofs shall be designed for both values. In these cases, roof surfaces may be subjected to either value due to turbulence. Alternative combinations of external and internal pressures (see also Clause 5.3) shall be considered, to obtain the most severe conditions for design.

For roofs, R, (see Figure 5.2) and for all α, the following cases shall be considered in determining the worst action effects using the values given in Tables 5.3(A) and 5.3(C):

(a) The more negative value of the two given in the Table applied to both halves of the roof.

(b) The more positive value of the two given in the Table applied to both halves of the roof.

(c) The more negative value applied to one half, and the more positive value applied to the other half of the roof.

For the underside of elevated buildings, $C_{p,e}$ shall be taken as 0.8 and –0.6. For buildings with less elevation above ground than one-third of the height, use linear interpolation between these values and 0.0, according to the ratio of clear unwalled height underneath first floor level to the total building height. For the calculation of underside external pressures, wind speed shall be taken as the value at h for all z.

Under-eaves pressures shall be taken as equal to those applied to the adjacent wall surface below the surface under consideration.

TABLE 5.2(A)

WALLS—EXTERNAL PRESSURE COEFFICENTS ($C_{p,e}$) FOR RECTANGULAR ENCLOSED BUILDINGS—WINDWARD WALL (W)

h	External pressure coefficients ($C_{p,e}$)
> 25.0 m	0.8 (wind speed varies with height)
≤ 25.0 m	For buildings on ground— 0.8, when wind speed varies with height; or 0.7, when wind speed is taken for $z = h$
	For elevated buildings— 0.8 (wind speed taken at h)

TABLE 5.2(B)

WALLS—EXTERNAL PRESSURE COEFFICENTS ($C_{p,e}$) FOR RECTANGULAR ENCLOSED BUILDINGS—LEEWARD WALL (L)

α, degrees (see Note)	d/b (see Note)	External pressure coefficients ($C_{p,e}$)
<10	≤1 2 ≥4	–0.5 –0.3 –0.2
10	All values	–0.3
15		–0.3
20		–0.4
≥25	≤0.1 ≥0.3	–0.75 –0.5

NOTE: For intermediate values of d/b and α, use linear interpolation.

@Seismicisolation

Accessed by SWINBURNE UNIVERSITY OF TECHNOLOGY on 15 Aug 2007

@Seismicisolation

TABLE 5.2(C)

WALLS—EXTERNAL PRESSURE COEFFICENTS ($C_{p,e}$) FOR RECTANGULAR ENCLOSED BUILDINGS—SIDE WALLS (S)

Horizontal distance from windward edge	External pressure coefficients ($C_{p,e}$)
0 to 1*h*	–0.65
1*h* to 2*h*	–0.5
2*h* to 3*h*	–0.3
> 3*h*	–0.2

TABLE 5.3(A)

ROOFS—EXTERNAL PRESSURE COEFFICIENTS ($C_{p,e}$) FOR RECTANGULAR ENCLOSED BUILDINGS—FOR UPWIND SLOPE (U) AND DOWNWIND SLOPE, (D) FOR α < 10° AND FOR (R) FOR GABLE ROOFS

Roof type and slope		Horizontal distance from windward edge of roof	External pressure coefficient ($C_{p,e}$)	
Crosswind slopes for gable roofs, (R)	Upwind slope, (U), Downwind slope, (D)		$h/d \le 0.5$ (see Note 1)	$h/d \ge 1.0$ (see Note 1)
All α	α < 10°	0 to 0.5*h*	–0.9, –0.4	–1.3, –0.6
		0.5 to 1*h*	–0.9, –0.4	–0.7, –0.3
		1*h* to 2*h*	–0.5, 0	(–0.7), (–0.3)
		2*h* to 3*h*	–0.3, 0.1	see Note 2
		> 3*h*	–0.2, 0.2	

NOTES:

1 For intermediate values of roof slopes and *h*/*d* ratios, use linear interpolation. Interpolation shall only be carried out on values of the same sign.

2 The values given in parentheses are provided for interpolation purposes.

TABLE 5.3(B)

ROOFS—EXTERNAL PRESSURE COEFFICIENTS ($C_{p,e}$) FOR RECTANGULAR ENCLOSED BUILDINGS—UPWIND SLOPE (U) $\alpha \ge 10°$

Roof type and slope	Ratio *h*/*d* (see Note)	External pressure coefficients ($C_{p,e}$)						
Upwind slope, (U)		Roof pitch, α degrees (see Note)						
		10	15	20	25	30	35	≥ 45
$\alpha \ge 10°$	≤ 0.25	–0.7, –0.3	–0.5, 0.0	–0.3, 0.2	–0.2, 0.3	–0.2, 0.4	0.0, 0.5	0, 0.8 sin α
	0.5	–0.9, –0.4	–0.7, –0.3	–0.4, 0.0	–0.3, 0.2	–0.2, 0.3	–0.2, 0.4	
	≥ 1.0	–1.3, –0.6	–1.0, –0.5	–0.7, –0.3	–0.5, 0.0	–0.3, 0.2	–0.2, 0.3	

NOTE: For intermediate values of roof slopes and *h*/*d* ratios, use linear interpolation. Interpolation shall only be carried out on values of the same sign.

Accessed by SWINBURNE UNIVERSITY OF TECHNOLOGY on 15 Aug 2007

@Seismicisolation

@Seismicisolation

TABLE 5.3(C)

ROOFS—EXTERNAL PRESSURE COEFFICIENTS ($C_{p,e}$) FOR RECTANGULAR ENCLOSED BUILDINGS—DOWNWIND SLOPE (D), $\alpha \geq 10$ DEGREES AND (R) FOR HIP ROOFS

Roof type and slope		Ratio h/d (see Note)	External pressure coefficients ($C_{p,e}$)			
			Roof pitch (α), degrees (see Note)			
Crosswind slopes for hip roofs (R)	Downwind slopes (D)		10	15	20	≥25
For any α	$\alpha \geq 10°$	≤ 0.25	–0.3	–0.5	–0.6	For $b/d < 3$; –0.6
		0.5	–0.5	–0.5	–0.6	For $3 < b/d < 8$; $-0.06\ (7 + b/d)$
		≥ 1.0	–0.7	–0.6	–0.6	For $b/d > 8$; –0.9

NOTE: For intermediate values of roof slopes and h/d ratios, use linear interpolation. Interpolation shall only be carried out on values of the same sign.

5.4.2 Area reduction factor (K_a) for roofs and side walls

For roofs and sidewalls, the area reduction factor (K_a) shall be as given in Table 5.4. For all other cases, K_a shall be taken as 1.0. Tributary area is the area contributing to the force being considered.

TABLE 5.4

AREA REDUCTION FACTOR (K_a)

Tributary area (A), m^2 (see Note)	Area reduction factor (K_a)
≤ 10	1.0
25	0.9
≥ 100	0.8

NOTE: For intermediate values of A, use linear interpolation.

5.4.3 Combination factor (K_c)

Where wind pressures acting on two or more surfaces of an enclosed building (e.g., windward wall, upwind roof, side wall, internal pressure, etc.) contribute simultaneously to a structural action effect (e.g. member force) on a major structural element, the combination factor (K_c) given in Table 5.5 may be applied to the combined forces calculated for the critical external and internal surfaces. This factor shall not be applied to cladding or immediate supporting structure such as purlins.

For all surfaces, K_c shall not be less than $0.8/K_a$ (see Clause 5.4.2).

Accessed by SWINBURNE UNIVERSITY OF TECHNOLOGY on 15 Aug 2007

@Seismicisolation

@Seismicisolation

TABLE 5.5

ACTION COMBINATION FACTORS FOR WIND PRESSURE CONTRIBUTING FROM TWO OR MORE BUILDING SURFACES TO EFFECTS ON MAJOR STRUCTURAL ELEMENTS

Design case	Combination factor (K_c)	Example diagrams
(a) Where wind action from any single surface contributes 75 percent or more to an action effect	1.0	—
(b) Pressures from windward and leeward walls in combination with positive or negative roof pressures	0.8	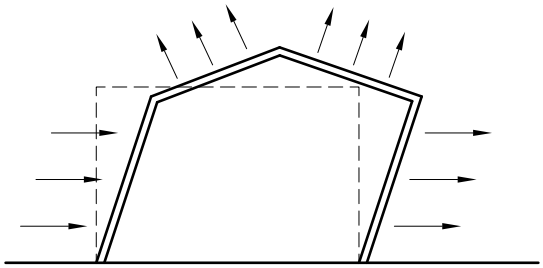
(c) Positive pressures on roofs in combination with negative internal pressures (from a wall opening)	0.8	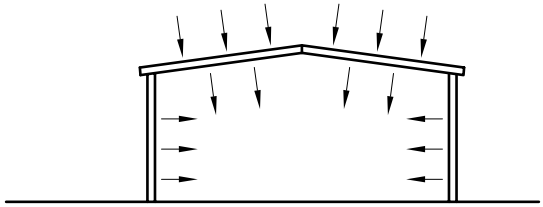
(d) Negative pressures on roofs or walls in combination with positive internal pressures	0.95	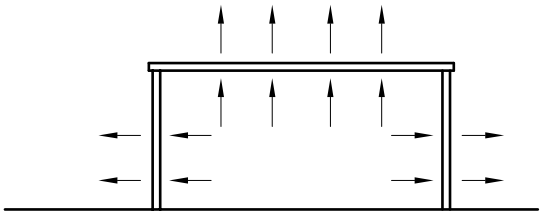
(e) All other cases	1.0	—

NOTE: The action combination factors less than 1.0 can be justified because wind pressures are highly fluctuating and do not occur simultaneously on all building surfaces.

5.4.4 Local pressure factor (K_ℓ) for cladding

The local pressure factor (K_ℓ) shall be taken as 1.0 in all cases except when determining the wind forces applied to cladding, their fixings, the members that directly support the cladding, and the immediate fixings of these members. In these cases K_ℓ shall be taken either as 1.0 or from Table 5.6 for the area and locations indicated, whichever gives the most adverse effect when combined with the external and internal pressures. Where more than one case applies, the largest value of K_ℓ from Table 5.6 shall be used.

Where the cladding or the supporting member extends beyond the zone a given in Table 5.6, a value of $K_\ell = 1.0$ shall apply to wind force contributions imposed from beyond that zone.

The value of dimension a is the minimum of $0.2b$ or $0.2d$ or the height (h) as shown in Figure 5.3.

Accessed by SWINBURNE UNIVERSITY OF TECHNOLOGY on 15 Aug 2007

@Seismicisolation

@Seismicisolation

Where interaction is possible, external pressures shall be taken to act simultaneously with internal pressures given in Clause 5.3 and with the under eaves pressures given in Clause 5.4.1 and the resultant forces shall be added. Design cases for negative pressures in Table 5.6 are alternative cases and shall not be applied simultaneously.

For rectangular buildings, the negative limit on the product $K_\ell\ C_{p,e}$ shall be –2.0 in all cases.

For flat or near flat roofs (slope not greater than 10°) with parapets, values of K_ℓ for areas RA1 and RA2 in the lee of the parapet may be modified by multiplying the values from Table 5.6 by the parapet reduction factor, K_r, given in Table 5.7.

TABLE 5.6

LOCAL PRESSURE FACTOR (K_ℓ)

Design case	Figure 5.3 reference number	h (m)	Area, A	Proximity to edge	K_ℓ
Positive pressures					
Windward wall	WA1	All	$A \le 0.25a^2$	Anywhere	1.25
All other areas	—	All	—	—	1.0
Negative pressures					
Roof edges	RA1	All	$0.25a^2 < A \le a^2$	$< a$	1.5
	RA2	All	$A \le 0.25a^2$	$< 0.5a$	2.0
Hips and ridges of roofs with pitch ≥10°	RA3	All	$0.25a^2 < A \le a^2$	$< a$	1.5
	RA4	All	$A \le 0.25a^2$	$< 0.5a$	2.0
Side walls near windward wall edges	SA1	≤ 25	$0.25a^2 < A \le a^2$	$< a$	1.5
	SA2		$A \le 0.25a^2$	$< 0.5a$	2.0
	SA3	> 25	$A \le 0.25a^2$	$> a$	1.5
	SA4		$0.25a^2 < A \le a^2$	$< a$	2.0
	SA5		$A \le 0.25a^2$	$< 0.5a$	3.0
All other areas	—	All	—	—	1.0

NOTE: The dimension a and the Figure reference numbers are defined in Figure 5.3.

TABLE 5.7

REDUCTION FACTOR (K_r) DUE TO PARAPETS

h	h_p (see Note)	K_r
≤ 25 m	≤0.07 h	1.0
	0.1 h	0.8
	≥0.2 h	0.5
> 25 m	≤0.02 w	1.0
	0.03 w	0.8
	≥0.05 w	0.5

NOTE: h_p = height of parapet above average roof level, w = shortest horizontal dimension of the building. For intermediate values, use linear interpolation.

Accessed by SWINBURNE UNIVERSITY OF TECHNOLOGY on 15 Aug 2007

@Seismicisolation

@Seismicisolation

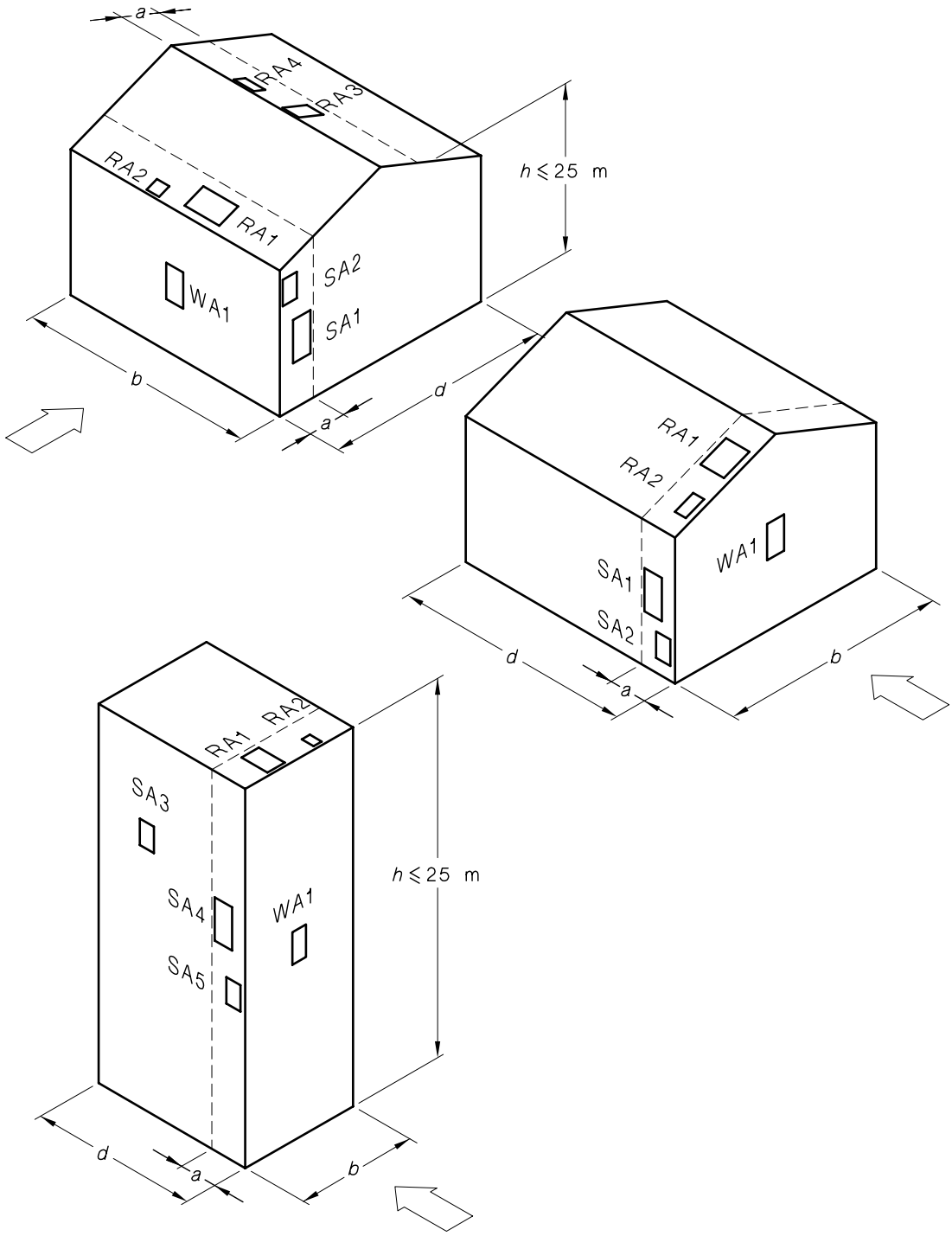

NOTE: The value of dimension *a* is the minimum of 0.2*b*, 0.2*d* and *h*.

FIGURE 5.3 LOCAL PRESSURE FACTORS (K_ℓ)

Accessed by SWINBURNE UNIVERSITY OF TECHNOLOGY on 15 Aug 2007

@Seismicisolation

@Seismicisolation

5.4.5 Permeable cladding reduction factor (K_p) for roofs and side walls

The permeable cladding reduction factor (K_p) shall be taken as 1.0 except that where an external surface consists of permeable cladding and the solidity ratio is less than 0.999 and exceeds 0.99, the values given in Table 5.8 may be used for negative pressure. The solidity ratio of the surface is the ratio of solid area to total area of the surface. Figure 5.4 shows dimension d_a.

TABLE 5.8

PERMEABLE CLADDING REDUCTION FACTOR (K_p)

Horizontal distance from windward edge (see Note)	K_p
0 to $0.2d_a$	0.9
$0.2d_a$ to $0.4d_a$	0.8
$0.4d_a$ to $0.8d_a$	0.7
$0.8d_a$ to $1.0d_a$	0.8

NOTE: d_a is the along-wind depth of the surface in metres.

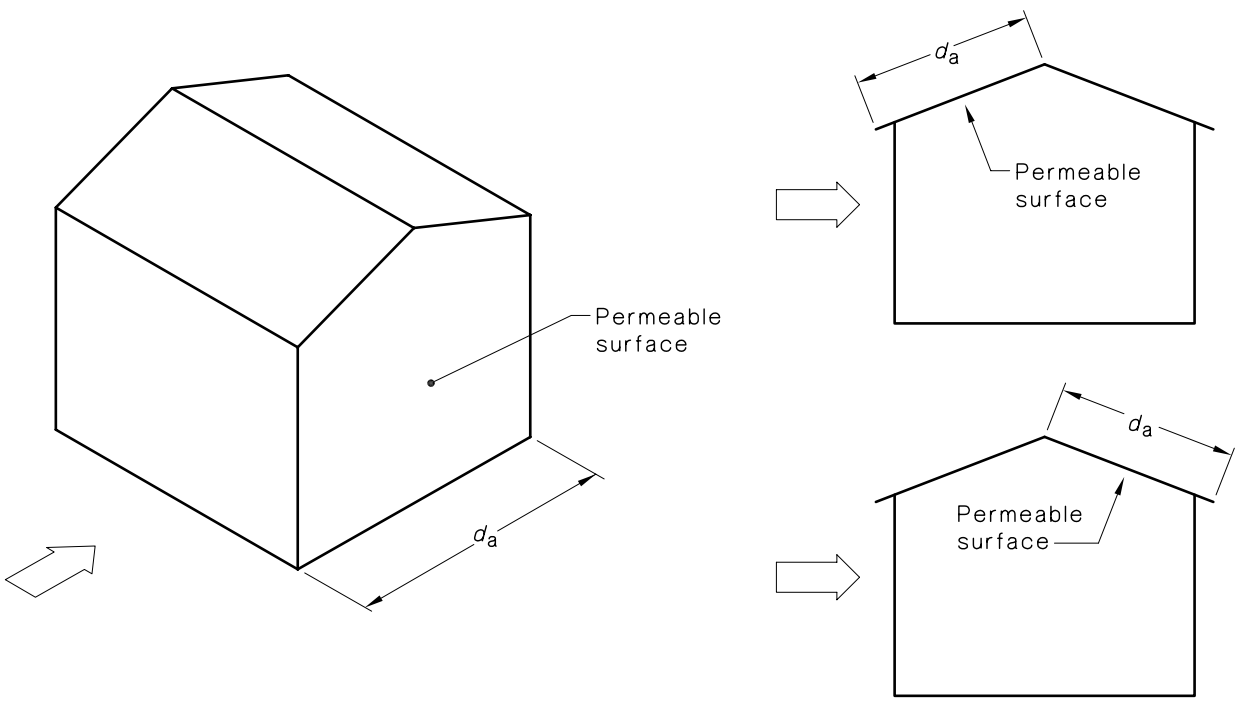

FIGURE 5.4 NOTATION FOR PERMEABLE SURFACES

5.5 FRICTIONAL DRAG FORCES FOR ENCLOSED BUILDINGS

The frictional drag (F) shall be calculated for roofs and side walls of enclosed buildings, in addition to pressures normal to the surface, only where the ratio d/h or d/b is greater than 4. The aerodynamic shape factor (C_{fig}) equals the frictional drag coefficient (C_f) in the direction of the wind as given in Table 5.9.

The effect shall be calculated on the basis of areas as follows:

(a) For $h \le b$, area = $(b+2h)(d-4h)$.

(b) For $h > b$, area = $(b+2h)(d-4b)$.

Accessed by SWINBURNE UNIVERSITY OF TECHNOLOGY on 15 Aug 2007

@Seismicisolation

@Seismicisolation

TABLE 5.9

FRICTIONAL DRAG COEFFICIENT FOR $d/h>4$ or $d/b>4$

Distance 'x' from windward edge	Surface Description	C_f
$x \geq$ the lesser of $4h$ and $4b$	Surfaces with ribs across the wind direction	0.04
	Surfaces with corrugations across the wind direction	0.02
	Smooth surfaces without corrugations or ribs or with corrugations or ribs parallel to the wind direction	0.01
$x <$ the lesser of $4h$ and $4b$	All surfaces	0

Accessed by SWINBURNE UNIVERSITY OF TECHNOLOGY on 15 Aug 2007

@Seismicisolation

@Seismicisolation

SECTION 6 DYNAMIC RESPONSE FACTOR

6.1 EVALUATION OF DYNAMIC RESPONSE FACTOR

The dynamic response factor (C_{dyn}) shall be determined for structures or elements of structures with natural first mode fundamental frequencies as follows:

(a) Greater than 1 Hz, C_{dyn} = 1.0.

(b) Less than 1 Hz—

(i) for tall buildings and towers—

(A) less than 0.2 Hz is not covered by this Standard;

(B) between 1 Hz and 0.2 Hz, C_{dyn} shall be as defined in Clause 6.2 for along-wind response and Clause 6.3 for crosswind response; and

(ii) for cantilever roofs—

(A) less than 0.5 Hz is not covered by this Standard;

(B) between 1 Hz and 0.5 Hz, C_{dyn} shall be as defined in Paragraph D5, Appendix D.

This Standard does not cover the roofs of podium buildings below tall buildings or where in the walls of tall buildings there are sloping edges or edge discontinuities.

NOTES:

1 Information on determining the natural frequency of a structure is given in AS/NZS 1170.2 Supp 1, *Structural design actions—Wind actions—Commentary* (Supplement to AS/NZS 1170.2:2002).

2 Appendix G provides information on calculating accelerations for serviceability in tall wind-sensitive structures.

6.2 ALONG-WIND RESPONSE OF TALL BUILDINGS AND TOWERS

6.2.1 General

The dynamic response factor shall be as given in Clause 6.2.2.

NOTE: Information on peak along-wind acceleration for serviceability is given in Appendix G.

6.2.2 Dynamic response factor (C_{dyn})

For calculation of action effects (bending moments, shear forces, member forces) at a height s on the structure (see Figure 6.1), the wind pressures on the structure at a height z shall be multiplied by a dynamic response factor (C_{dyn}). This factor is dependent on both z and s and $s < z < h$. For calculation of base bending moments, deflections and acceleration at the top of the structure, a single value of C_{dyn} shall be used with s taken as zero.

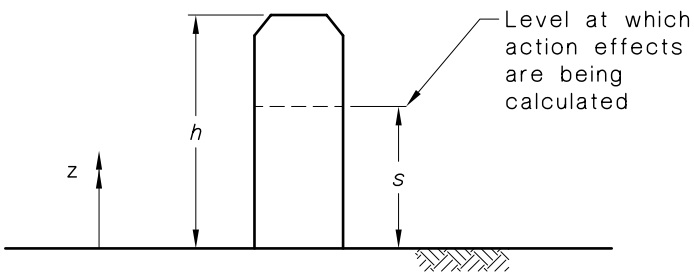

NOTE: $s < z < h$

FIGURE 6.1 NOTATION FOR HEIGHTS

@Seismicisolation

Accessed by SWINBURNE UNIVERSITY OF TECHNOLOGY on 15 Aug 2007

@Seismicisolation

The dynamic response factor (C_{dyn}) shall be calculated as follows:

$$C_{dyn} = \frac{1 + 2I_h\left[g_v^2 B_s + \frac{H_s g_R^2 S E_t}{\zeta}\right]^{0.5}}{(1 + 2g_v I_h)} \qquad \ldots 6.2(1)$$

where

s = height of the level at which action effects are calculated for a structure

h = average roof height of a structure above the ground

I_h = turbulence intensity, obtained from Table 6.1 by setting z equal to h

g_v = peak factor for the upwind velocity fluctuations, which shall be taken as 3.7

B_s = background factor, which is a measure of the slowly varying background component of the fluctuating response, caused by low frequency wind speed variations, given as follows where b_{sh} is the average breadth of the structure between heights s and h and L_h is a measure of the integral turbulence length scale at height h equal to $85(h/10)^{0.25}$:

$$B_s = \frac{1}{1 + \frac{\left[36(h-s)^2 + 64 b_{sh}^2\right]^{0.5}}{L_h}} \qquad \ldots 6.2(2)$$

H_s = height factor for the resonant response which equals $1 + (s/h)^2$

g_R = peak factor for resonant response (10 min period) given by:

$$= \sqrt{[2\log_e(600 n_c)]} \qquad \ldots 6.2(5)$$

S = size reduction factor given as follows, where n_a is first mode natural frequency of vibration of a structure in the along-wind direction in Hertz and b_{0h} is the average breadth of the structure between heights 0 and h:

$$= \frac{1}{\left[1 + \frac{3.5 n_a h(1 + g_v I_h)}{V_{des,\theta}}\right]\left[1 + \frac{4 n_a b_{0h}(1 + g_v I_h)}{V_{des,\theta}}\right]} \qquad \ldots 6.2(3)$$

E_t = ($\pi/4$) times the spectrum of turbulence in the approaching wind stream, given as follows:

$$= \frac{\pi N}{(1 + 70.8N^2)^{5/6}} \qquad \ldots 6.2(4)$$

where

N = reduced frequency

= $n_a L_h[1 + (g_v I_h)] / V_{des,\theta}$

n_a = first mode natural frequency of vibration of a structure in the along-wind direction in Hertz

$V_{des,\theta}$ = building orthogonal design wind speed (see Section 2.3)

ζ = ratio of structural damping to critical damping of a structure (see Table 6.2)

Accessed by SWINBURNE UNIVERSITY OF TECHNOLOGY on 15 Aug 2007

@Seismicisolation

@Seismicisolation

TABLE 6.1

TURBULENCE INTENSITY (I_z)

Height (z) m	Limit state, region and terrain category			
	Serviceability limit states			
	Terrain category 1, all regions	Terrain category 2, all regions	Terrain category 3, all regions	Terrain category 4, all regions
	Ultimate limit states			
	Terrain category 1, Regions A, W and B	Terrain category 2, Regions A, W and B	Terrain category 3, Regions A, W and B Terrain categories 1, 2, and 3: Regions C and D	Terrain category 4, all regions
≤3	0.171	0.207	0.271	0.342
5	0.165	0.196	0.271	0.342
10	0.157	0.183	0.239	0.342
15	0.152	0.176	0.225	0.342
20	0.147	0.171	0.215	0.342
30	0.140	0.162	0.203	0.305
40	0.133	0.156	0.195	0.285
50	0.128	0.151	0.188	0.270
75	0.118	0.140	0.176	0.248
100	0.108	0.131	0.166	0.233
150	0.095	0.117	0.150	0.210
200	0.085	0.107	0.139	0.196
250	0.080	0.098	0.129	0.183
300	0.074	0.092	0.121	0.173
400	0.068	0.082	0.108	0.155
500	0.058	0.074	0.098	0.141

NOTE: For intermediate values of height, z and terrain category, use linear interpolation.

TABLE 6.2

VALUE OF RATIO OF STRUCTURAL DAMPING TO CRITICAL DAMPING OF THE STRUCTURE (ζ)

Stress levels and type of construction	Ratio of structural damping to critical damping (ζ)
Serviceability limit states	
Steel construction	0.005 to 0.010
Reinforced or prestressed concrete	0.005 to 0.010
Ultimate limit state	
Steel frame welded	0.02
Steel frame bolted	0.05
Reinforced concrete	0.05

Accessed by SWINBURNE UNIVERSITY OF TECHNOLOGY on 15 Aug 2007

@Seismicisolation

@Seismicisolation

6.3 CROSSWIND RESPONSE

6.3.1 General

Clause 6.3.2 gives methods for determining equivalent static forces and base overturning moments and C_{fig} C_{dyn} for tall enclosed buildings and towers of rectangular cross-section, and Clause 6.3.3 gives deflections and equivalent static forces for chimneys, masts and poles of circular cross-section. Calculation of crosswind response is not required for porous lattice towers.

NOTES:

1 Where calculations of crosswind response yield high values, further guidance is given in AS/NZS 1170.2 Supp 1, *Structural design actions—Wind actions—Commentary* (Supplement to AS/NZS 1170.2:2002).

2 Information on peak crosswind acceleration for serviceability is given in Appendix G.

6.3.2 Crosswind response of tall enclosed buildings and towers of rectangular cross-section

6.3.2.1 *Equivalent static wind force*

The equivalent crosswind static wind force per unit height (w_{eq}) as a function of z, (evaluated using force equals mass times acceleration) in newtons per metre shall be as follows:

$$w_{eq}(z) = 0.5\,\rho_{air}\left[V_{des,\theta}\right]^2 d C_{fig} C_{dyn} \qquad \ldots 6.3(1)$$

where $V_{des,\theta}$ is evaluated at $z = h$, and d is the horizontal depth of the structure parallel to the wind stream and

$$\left(C_{fig} C_{dyn}\right) = 1.5 g_R \left(\frac{b}{d}\right) \frac{K_m}{\left(1 + g_v I_h\right)^2} \left(\frac{z}{h}\right)^k \sqrt{\frac{\pi C_{fs}}{\zeta}} \qquad \ldots 6.3(2)$$

where

K_m = mode shape correction factor for crosswind acceleration, given by:

= $0.76 + 0.24k$

where

k = mode shape power exponent for the fundamental mode and values of the exponent k should be taken as:

= 1.5 for a uniform cantilever

= 0.5 for a slender framed structure (moment resisting)

= 1.0 for a building with central core and moment resisting façade

= 2.3 for a tower decreasing in stiffness with height, or with a large mass at the top

= the value obtained from fitting $\phi_1(z) = (z/h)^k$ to the computed modal shape of the structure

$\phi_1(z)$ = first mode shape as a function of height z, normalized to unity at $z = h$

C_{fs} = crosswind force spectrum coefficient generalized for a linear mode shape given in Clause 6.3.2.3

6.3.2.2 *Crosswind base overturning moment*

The crosswind base overturning moment (M_c) in Newton metres (which can be derived by the integration from 0 to h of $w_{eq}(z) \cdot z\,dz$) shall be as follows:

@Seismicisolation

Accessed by SWINBURNE UNIVERSITY OF TECHNOLOGY on 15 Aug 2007

@Seismicisolation

$$M_c = 0.5 g_R b \left[\frac{0.5 \rho_{air} \left[V_{des,\theta} \right]^2}{\left(1 + g_v I_h\right)^2} \right] h^2 \left(\frac{3}{k+2} \right) K_m \sqrt{\frac{\pi C_{fs}}{\zeta}} \qquad \ldots 6.3(3)$$

where the value $\left(\frac{3}{k+2}\right) K_m$ is the mode shape correction factor for crosswind base overturning moment.

6.3.2.3 *Crosswind force spectrum coefficient (C_{fs})*

The reduced velocity (V_n) shall be calculated as follows using $V_{des,\theta}$ calculated at $z = h$, as follows:

$$V_n = \frac{V_{des,\theta}}{n_c b \left(1 + g_v I_h\right)} \qquad \ldots 6.3(4)$$

Values of the crosswind force spectrum coefficient generalized for a linear mode shape (C_{fs}) shall be calculated from the reduced velocity (V_n) as follows (see Figures 6.2 to 6.5):

(a) For a 3:1:1 square section (h:b:d), where V_n is in the range 2 to 16:

(i) For turbulence intensity of 0.12 at $2h/3$:

$$\log_{10} C_{fs} = 0.000353 V_n^4 - 0.0134 V_n^3 + 0.15 V_n^2 - 0.345 V_n - 3.109 \qquad \ldots 6.3(5)$$

(ii) For turbulence intensity of 0.2 at $2h/3$:

$$\log_{10} C_{fs} = 0.00008 V_n^4 - 0.028 V_n^3 + 0.0199 V_n^2 + 0.13 V_n - 2.985 \qquad \ldots 6.3(6)$$

(b) For a 6:1:1 square section (h:b:d), where V_n is in the range 3 to 16:

(i) For turbulence intensity of 0.12 at $2h/3$:

$$\log_{10} C_{fs} = 0.000406 V_n^4 - 0.0165 V_n^3 + 0.201 V_n^2 - 0.603 V_n - 2.76 \qquad \ldots 6.3(7)$$

(ii) For turbulence intensity of 0.2 at $2h/3$:

$$\log_{10} C_{fs} = 0.000334 V_n^4 - 0.0125 V_n^3 + 0.141 V_n^2 - 0.384 V_n - 2.36 \qquad \ldots 6.3(8)$$

(c) For a 6:2:1 rectangular section (h:b:d), where V_n is in the range 2 to 18:

(i) For turbulence intensity of 0.12 at $2h/3$:

$$\log_{10} C_{fs} = \frac{-3.2 + 0.0683 V_n^2 - 0.000394 V_n^4}{1 - 0.02 V_n^2 + 0.000123 V_n^4} \qquad \ldots 6.3(9)$$

(ii) For turbulence intensity of 0.2 at $2h/3$:

$$\log_{10} C_{fs} = \frac{-3 + 0.0637 V_n^2 - 0.00037 V_n^4}{1 - 0.02 V_n^2 + 0.000124 V_n^4} \qquad \ldots 6.3(10)$$

(d) For a 6:1:2 rectangular section (h:b:d), where V_n is in the range 2 to 16:

(i) For turbulence intensity of 0.12 at $2h/3$:

$$\log_{10} C_{fs} = 0.000457 V_n^3 - 0.0226 V_n^2 + 0.396 V_n - 4.093 \qquad \ldots 6.3(11)$$

(ii) For turbulence intensity of 0.2 at $2h/3$:

$$\log_{10} C_{fs} = 0.00038 V_n^3 - 0.0197 V_n^2 + 0.363 V_n - 3.82 \qquad \ldots 6.3(12)$$

Accessed by SWINBURNE UNIVERSITY OF TECHNOLOGY on 15 Aug 2007

@Seismicisolation

@Seismicisolation

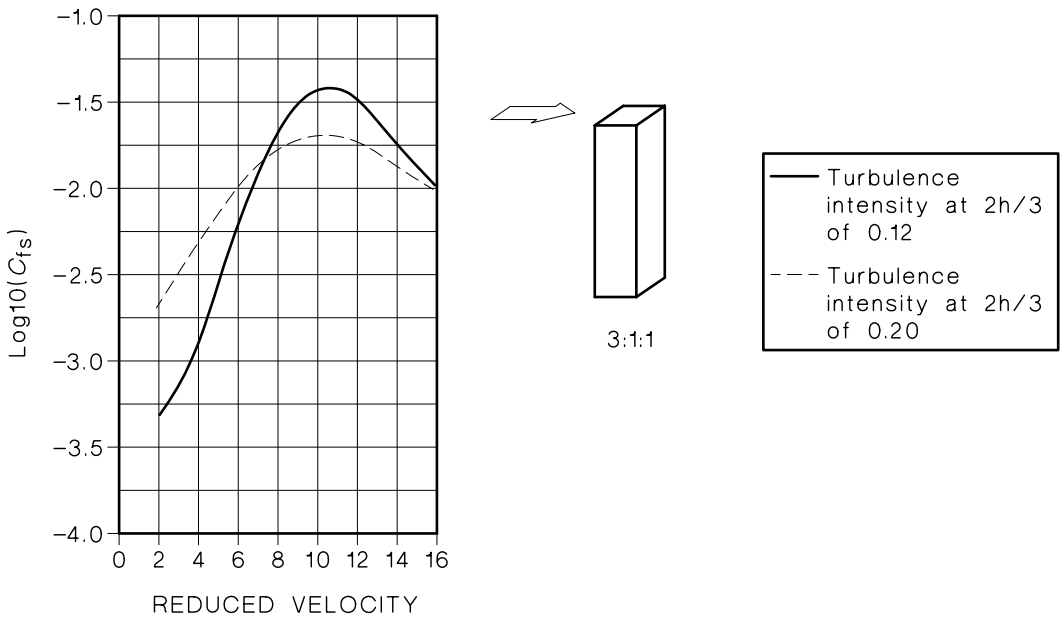

FIGURE 6.2 CROSSWIND FORCE SPECTRUM COEFFICIENT FOR A 3:1:1 SQUARE SECTION

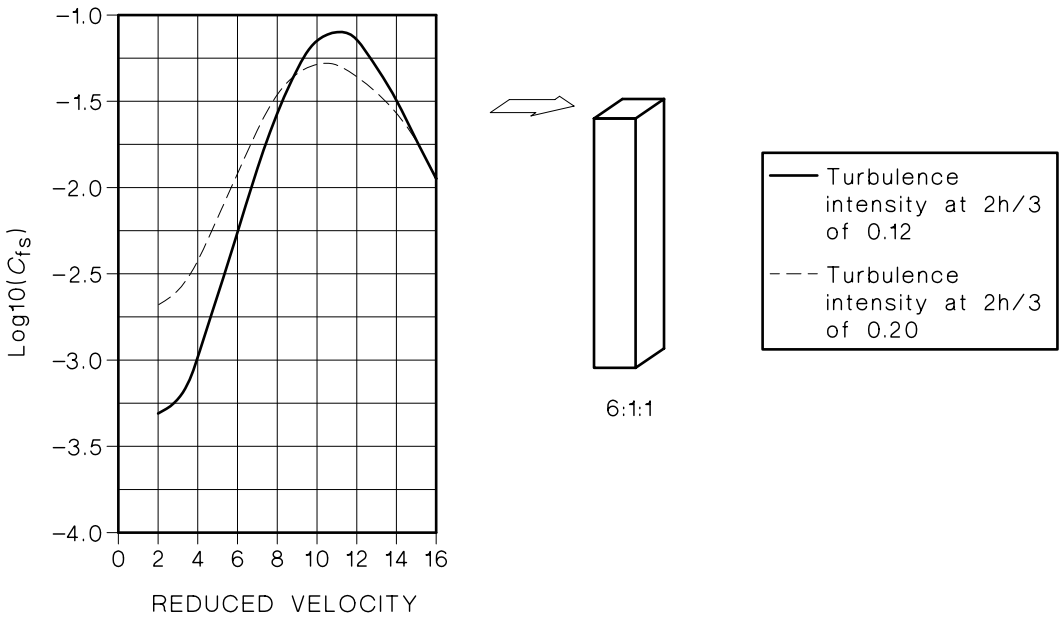

FIGURE 6.3 CROSSWIND FORCE SPECTRUM COEFFICIENT FOR A 6:1:1 SQUARE SECTION

Accessed by SWINBURNE UNIVERSITY OF TECHNOLOGY on 15 Aug 2007

@Seismicisolation

@Seismicisolation

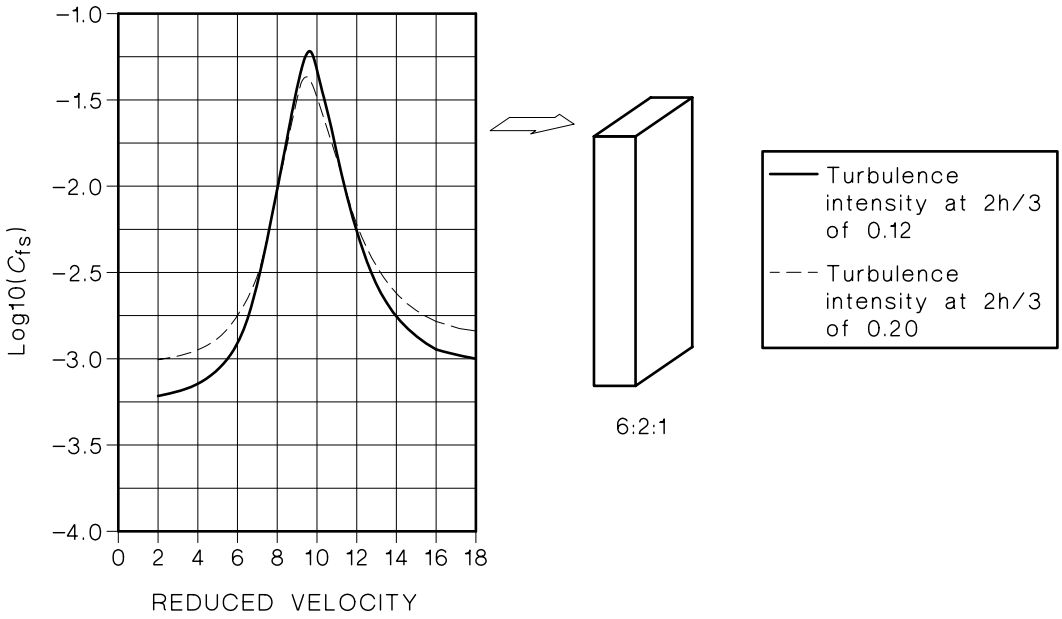

FIGURE 6.4 CROSSWIND FORCE SPECTRUM COEFFICIENT FOR A 6:2:1 RECTANGULAR SECTION

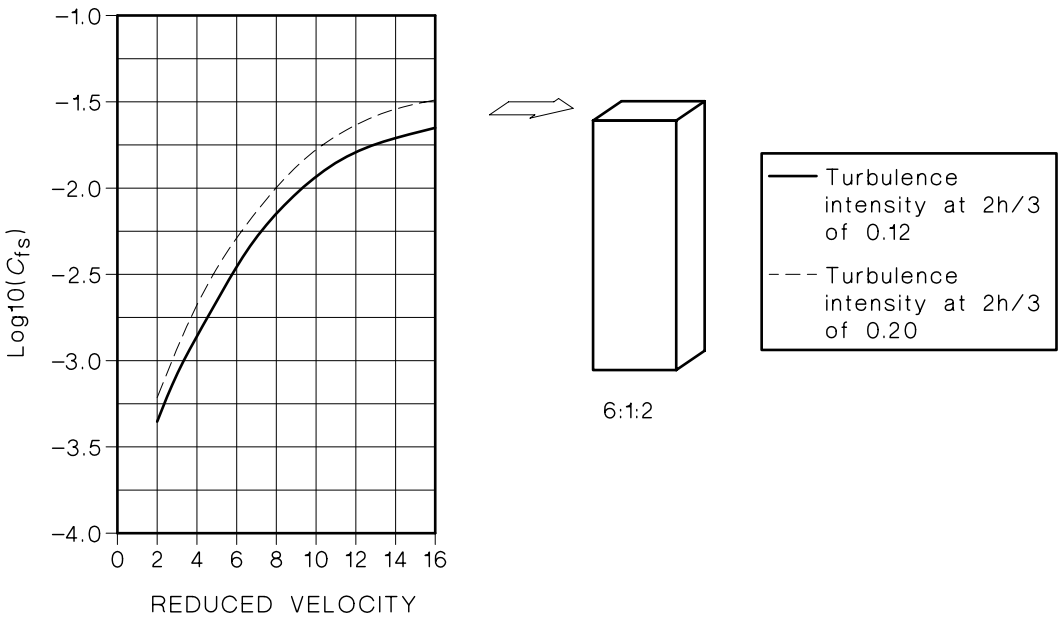

FIGURE 6.5 CROSSWIND FORCE SPECTRUM COEFFICIENT FOR A 6:1:2 RECTANGULAR SECTION

6.3.3 Crosswind response of chimneys, masts and poles of circular cross-section

6.3.3.1 *Crosswind tip deflection*

The maximum amplitude of tip deflection (y_{max}) in crosswind vibration at the critical wind speed due to vortex shedding for chimneys, masts or poles of circular cross-section (without ladders, strakes or other appendages near the top) shall be calculated as follows:

$$y_{max} = Kb_t/\mathrm{Sc} \qquad \ldots 6.3(14)$$

where

K = factor for maximum tip deflection, taken as 0.50 for circular cross-sections

@Seismicisolation

Accessed by SWINBURNE UNIVERSITY OF TECHNOLOGY on 15 Aug 2007

@Seismicisolation

b_t = average breadth of the top third of the structure

Sc = Scruton number given by:

= $4\pi\, m_t\, \zeta/(\rho_{air}\, b^2)$

m_t = average mass per unit height over the top third of the structure

ζ = ratio of structural damping to critical damping of a structure, as given in Table 6.2

6.3.3.2 *Equivalent static wind force*

The equivalent static wind force per unit height (w_{eq}) for chimneys, masts or poles of circular cross-section (without ladders, strakes or other appendages near the top), as a function of height z, $w_{eq}(z)$, is given as follows:

$$w_{eq}(z) = m(z)\,(2\pi\, n_1)^2\, y_{max}\, \phi_1(z) \qquad \ldots 6.3(15)$$

where

$m(z)$ = mass per unit height as a function of height z

n_1 = first mode natural frequency of vibration of a structure, in Hertz

$\phi_1(z)$ = first mode shape as a function of height z, normalized to unity at $z = h$, which shall be taken as $(z/h)^2$

6.4 COMBINATION OF ALONG-WIND AND CROSSWIND RESPONSE

The total combined peak scalar dynamic action effect ($_{,t}$), such as an axial load in a column, shall be as follows:

$$\varepsilon_t = \varepsilon_{a,m} + [\varepsilon_{a,p}{}^2 + \varepsilon_{c,p}{}^2]^{0.5} \qquad \ldots 6.4(1)$$

where

$\varepsilon_{a,m}$ = action effect derived from the mean along-wind response, given as follows, where the values of g_v, I_h and C_{dyn} are defined in Section 6.2.2:

= $\varepsilon_{a,p}/[C_{dyn}\,(1 + 2g_v\, I_h)]$

$\varepsilon_{a,p}$ = action effect derived from the peak along-wind response

$\varepsilon_{c,p}$ = action effect derived from the peak crosswind response

NOTE: The factor $[C_{dyn}\,(1 + 2_{gv}\, I_h)]$ is a gust factor (G).

Accessed by SWINBURNE UNIVERSITY OF TECHNOLOGY on 15 Aug 2007

@Seismicisolation

@Seismicisolation

APPENDIX A

DEFINITIONS

(Normative)

Aerodynamic shape factor

Factor to account for the effects of the geometry of the structure on surface pressure due to wind.

Annual probability of exceedance of the action

The probability that a value will be exceeded in any one year.

NOTE: This is the inverse of the so-called 'return period' better described as the average recurrence interval.

Awning

Roof-like structure, usually of limited extent, projecting from a wall of a building.

Canopy

Roof adjacent to or attached to a building, generally not enclosed by walls.

Cladding

Material that forms the external surface over the framing of a building or structure.

Design wind speed

Wind speed for use in design adjusted for annual probability of exceedance, wind direction, geographic position, surrounding environment and height.

NOTE: For structures over 25 m, design wind speed is expressed as a function of height.

Dominant opening

Opening in the external surface of an enclosed building, which directly influences the average internal pressure in response to external pressures at that particular opening.

NOTE: Dominant openings need not be large.

Drag

Force acting in the direction of the wind stream; *see also* lift.

Dynamic response factor

Factor to account for the effects of fluctuating forces and resonant response on wind-sensitive structures.

Elevated building

Building with a clear, unwalled space underneath the first floor level with a height from ground to underside of the first floor of one-third or more of the total height of the building.

Enclosed building

Building that has a roof and full perimeter walls (nominally sealed) from floor to roof level.

Escarpment

Long, steeply sloping, face between nominally level lower and upper plains where the plains have average slopes of not greater than 5%.

First mode shape

Shape of a structure at its maximum amplitude under first mode natural vibration.

Accessed by SWINBURNE UNIVERSITY OF TECHNOLOGY on 15 Aug 2007

@Seismicisolation

@Seismicisolation

First mode natural frequency

Frequency of free oscillation corresponding to the lowest harmonic of vibration of a structure.

Force coefficient

Coefficient that, when multiplied by the incident wind pressure and an appropriate area (defined in the text), gives the force in a specific direction.

Free roof

Roof (of any type) with no enclosing walls underneath, (e.g., freestanding carport).

Freestanding walls

Walls that are exposed to the wind on both sides, with no roof attached (e.g., fences).

Gable roof

Ridged roof with two sloping surfaces and vertical end walls triangular from lowest points up to the ridge.

Hip roof

A roof with four sloping (pitched) surfaces, pyramidal in shape, and with level eaves all round. A hip roof on a rectangular plan has two triangular sloping roofs at the short sides (hip ends) and two trapezoidal sloping roofs at the long sides.

Hoardings

Freestanding (rectangular) signboards, and the like, supported clear of the ground.

Immediate supports (cladding)

Those supporting members to which cladding is directly fixed (e.g., battens, purlins, girts, studs).

Lag distance

Horizontal distance downwind, required for the effects of a change in terrain roughness on wind speed to reach the height being investigated.

Lattice towers

Three-dimensional frameworks comprising three or more linear boundary members interconnected by linear bracing members joined at common points (nodes), enclosing an open area through which the wind may pass.

Lift

Force acting at 90 degrees to the wind stream; *see also* drag.

Mansard roof

A roof with two slopes on all four sides, the lower slope steeper than the upper slope.

NOTE: A mansard roof with the upper slopes less than 10 degrees may be assumed to be flat topped.

Monoslope roof

Planar roof with a constant slope and without a ridge.

Obstructions

Natural or man-made objects that generate turbulent wind flow, ranging from single trees to forests and from isolated small structures to closely spaced multistorey buildings.

Accessed by SWINBURNE UNIVERSITY OF TECHNOLOGY on 15 Aug 2007

@Seismicisolation

@Seismicisolation

Permeable

Surface with an aggregation of small openings, cracks, and the like, which allows air to pass through under the action of a pressure differential.

Pitched roof

Bi-fold, bi-planar roof (two sloping surfaces) meeting at a central ridge.

Pressure

Air pressure referenced to ambient air pressure. In this Standard, negative values are less than ambient (suction), positive values exceed ambient. Net pressures act normal to a surface in the direction specified within the text.

Pressure coefficient

Ratio of the pressure acting at the point on a surface, to the free stream dynamic pressure of the incident wind.

Rectangular building

For the purposes of Section 5 of this Standard, rectangular buildings include buildings generally made up of rectangular shapes in plan.

Reynolds number

The ratio of the inertial forces to the viscous forces in the airflow.

Ridge (topographic feature)

Long crest or chain of hills that have a nearly linear apex, with sloping faces on either side of the crest.

Roughness length

Theoretical quantification of the turbulence-inducing nature of a particular type of terrain on airflow (wind).

Scruton number

A mass damping parameter.

Solidity (of cladding)

Ratio of the solid area to the total area of the surface.

Structural elements, major

Structural elements whose tributary areas are greater than 10 m^2.

Structural elements, minor

Structural elements whose tributary areas are less than or equal to 10 m^2.

Terrain

Surface roughness condition when considering the size and arrangement of obstructions to the wind.

Topography

Major land surface features, comprising hills, valleys and plains, that strongly influence wind flow patterns.

Tornado

Violently rotating column of air, pendant from the base of a convective cloud, and often observable as a funnel cloud attached to the cloud base.

Accessed by SWINBURNE UNIVERSITY OF TECHNOLOGY on 15 Aug 2007

@Seismicisolation

@Seismicisolation

Tributary area

Area of building surface contributing to the force being considered.

Troughed roof

Bi-fold, bi-planar roof with a valley at its lowest point.

Accessed by SWINBURNE UNIVERSITY OF TECHNOLOGY on 15 Aug 2007

@Seismicisolation

@Seismicisolation

APPENDIX B

NOTATION

(Normative)

Unless stated otherwise, the notation used in this Standard shall have the following meanings with respect to a structure, or member, or condition to which a clause is applied. (See Clause 1.5 for units.)

A = surface area of the element or the tributary area which transmits wind forces to the element, being—

= the area upon which the pressure acts, which may not always be normal to the wind stream when used in conjunction with the pressure coefficient (C_p);

= the projected area normal to the wind stream when used in conjunction with a drag force coefficient (C_d); or

= the areas as defined in applicable clauses (see Appendix E) when used in conjunction with a force coefficient, ($C_{F,x}$) or ($C_{F,y}$).

A_a = reference area of ancillaries on a tower

A_{ref} = reference area of flag

$A_{z,s}$ = total projected area of the tower section at height z

A_z = a reference area, in square metres, at height z, upon which the pressure at that height (p_z) acts

a = constant for ease of calculation (Paragraph E4.2.3); *or*

dimension used in defining the extent of application of local pressure factors

B_s = background factor, which is a measure of the slowly varying background component of the fluctuating response, caused by low frequency wind speed variations

b = breadth of a structure or element, usually normal to the wind stream (see Figures 5.2, C5, C7, D1, E1, E2, E4 and Tables E3, E4 and E5); *or*

average diameter of a circular section

b_D = diagonal breadth of UHF antennas

b_i = average diameter or breadth of a section of a tower member

b_N = normal breadth of UHF antennas

b_{0h} = average breadth of the structure between heights 0 and h

b_s = average breadth of shielding buildings, normal to the wind stream

b_{sh} = average breadth of the structure between heights s and h

bt = average breadth of the top third of the structure

b_z = average breadth of the structure at the section at height z

b/w = ratio of the average diameter of an ancillary to the average width of a structure

C_d = drag force coefficient for a structure or member in the direction of the wind stream

C_{da} = value of drag force coefficient (C_d) on an isolated ancillary on a tower

C_{de} = effective drag force coefficient for a tower section with ancillaries

Accessed by SWINBURNE UNIVERSITY OF TECHNOLOGY on 15 Aug 2007

@Seismicisolation

@Seismicisolation

C_{dyn} = dynamic response factor

$C_{F,x}$ = drag force coefficient for a structure or member, in the direction of the *x*-axis

$C_{F,y}$ = drag force coefficient for a structure or member, in the direction of the *y*-axis

C_f = frictional drag force coefficient

C_{fig} = aerodynamic shape factor

$C_{fig,1}$ = aerodynamic shape factor for the first frame in the upwind direction

C_{fs} = crosswind force spectrum coefficient generalized for a linear mode shape

$C_{p,b}$ = external pressure coefficient for sides of bins, silos and tanks

$C_{p,e}$ = external pressure coefficient

$C_{p,i}$ = internal pressure coefficient

$C_{p,\ell}$ = net pressure coefficient for the leeward half of a free roof

$C_{p,n}$ = net pressure coefficient acting normal to the surface for canopies, freestanding roofs, walls, and the like

$C_{p,w}$ = net pressure coefficient for the windward half of a free roof

$C_{p1}(\theta_b)$ = external pressure coefficient on walls of bins, silos or tanks of unit aspect ratio (c/b = 1) as a function of θ_b

c = constant for ease of calculation (Paragraph E4.2.3); *or*

= net height of a hoarding, flag, bin, silo or tank (not including roof or lid height); *or*

= height between the highest and lowest points on a hyperbolic paraboloid roof

D = downwind roof slope

d = minimum roof plan dimension; *or*

= depth or distance parallel to the wind stream to which the plan or cross-section of a structure or shape extends (e.g., outside diameter); *or*

= length of span of curved roof

d_a = along-wind depth of a porous wall or roof surface

d_s = length of span of the first pitched roof in a multi-span building

E = site elevation above mean sea level, in metres

E_t = spectrum of turbulence in the approaching wind stream

e = the base of Napierian logarithms (≈ 2.71828)

e = horizontal eccentricity of net pressure

F = force on a building element, in Newtons

F_C = factor for region C to account for lack of recent analysis of cyclone activity

F_D = factor for region D to account for lack of recent analysis of cyclone activity

f = frictional drag force per unit area parallel to a surface, in Newtons per square metre

f_z = the design frictional distributed force parallel to the surface, calculated in Clause 2.4.2 at height z, in newtons per square metre

g_R = peak factor for resonant response (10 min period)

Accessed by SWINBURNE UNIVERSITY OF TECHNOLOGY on 15 Aug 2007

@Seismicisolation

@Seismicisolation

g_v = peak factor for the upwind velocity fluctuations

H = height of the hill, ridge or escarpment

H_s = height factor for the resonant response

h = average roof height of a structure above the ground

h_c = height from ground to the attached canopy, freestanding roof, wall, or the like

h_i = developed height of the inner layer, in metres

h_p = height of parapet above average roof level

h_r = average height of surface roughness

h_s = average roof height of shielding buildings

I_h = turbulence intensity, obtained from Table 6.1 by setting z equal to h

I_z = turbulence intensity at height z given for various terrain categories in Table 6.1

K = factor for maximum tip deflection

K_a = area reduction factor

K_{ar} = aspect ratio correction factor for individual member forces

K_c = combination factor

K_i = factor to account for the angle of inclination of the axis of members to the wind direction

K_{in} = correction factor for interference

K_ℓ = local pressure factor

K_m = mode shape correction factor for crosswind acceleration

K_p = net porosity factor

K_r = parapet reduction factor

K_{sh} = shielding factor for shielded frames in multiple open-framed structures

k = mode shape power exponent

k_b = factor for a circular bin

L_h = measure of integral turbulence length scale at height h

L_u = horizontal distance upwind from the crest of the hill, ridge or escarpment to a level half the height below the crest

L_1 = length scale, in metres, to determine the vertical variation of M_h, to be taken as the greater of 0.36 L_u or 0.4 H

L_2 = length scale, in metres, to determine the horizontal variation of M_h, to be taken as 4 L_1 upwind for all types, and downwind for hills and ridges, or 10 L_1 downwind for escarpments

L = leeward wall

l = length of member; *or*

length of a cantilevered roof beam

l_f = flag length

l_s = average spacing of shielding buildings

M_c = crosswind base overturning moment, in Newton metres

@Seismicisolation

Accessed by SWINBURNE UNIVERSITY OF TECHNOLOGY on 15 Aug 2007

@Seismicisolation

M_d = wind direction multiplier (see Clause 3.3)

M_s = shielding multiplier

M_t = topographic multiplier

M_h = hill shape multiplier

M_{lee} = lee (effect) multiplier (taken as 1.0, except in New Zealand lee zones, see Clause 4.4.3)

$M_{z,cat}$ = terrain/height multiplier

m_0 = average mass per unit height, in kilograms per metre

m_f = mass per unit area of flag, in kilograms per square metre

m_t = average mass per unit height over the top third of the structure, in kilograms per metre

$m(z)$ = mass per unit height as a function of height z, in kilograms per metre

N = reduced frequency

n = number of spans of a multi-span roof

n_1 = first mode natural frequency of vibration of a structure, in Hertz

n_a = first mode natural frequency of vibration of a structure in the along-wind direction, in Hertz

n_c = first mode natural frequency of vibration of a structure in the crosswind direction, in Hertz

n_s = number of upwind shielding buildings within a 45° sector of radius $20h$ and with $h_s \geq h$

p = design wind pressure acting normal to a surface, in pascals

= p_e, p_i or p_n where the sign is given by the C_p values used to evaluate C_{fig}

NOTE: Pressures are taken as positive, indicating pressures above ambient and negative, indicating pressures below ambient.

p_e = external wind pressure

p_i = internal wind pressure

p_n = net wind pressure

p_z = design wind pressure, in pascals (normal to the surface), at height z, calculated in Clause 2.4.1

NOTE: The sign convention for pressures leads to forces towards the surface for positive pressures and forces away from the surface for negative pressures.

R = inverse of the annual probability of exceedance of the wind speed

R = crosswind roof slope

Re = Reynolds number

r = rise of a curved roof; *or*

corner radius of a structural shape

S = size reduction factor

S = side wall

Sc = Scruton number

Accessed by SWINBURNE UNIVERSITY OF TECHNOLOGY on 15 Aug 2007

@Seismicisolation

@Seismicisolation

s = shielding parameter; *or*

= height of the level at which action effects are calculated for a structure

T = top roof section

U = upwind roof slope

$V_{des,\theta}$ = building orthogonal design wind speeds (usually, $\theta = 0°$, 90°, 180°, and 270°), as given in Clause 2.3

NOTE: $V_{des,\theta}$ may be expressed as a function of height z, for some applications, e.g. windward walls of tall buildings (>25m).

$V_{des,\theta}(z)$ = building orthogonal design wind speeds as a function of height z

V_n = reduced velocity (non dimensional)

$V_{sit,\beta}$ = wind speeds for a site, varying according to compass direction

V_R = regional 3 second gust wind speed, in metres per second, for annual probability of exceedance of 1/R

W = wind actions (see AS/NZS 1170.0)

W = windward wall

$w_{eq}(z)$ = equivalent static wind force per unit height as a function of height z, in Newtons per metre

w = width of a tower; *or*

= shortest horizontal dimension of the building

w_c = width of canopy, awning carport, or similar, from the face of the building

x = distance from the windward edge of a canopy or cantilevered roof; *or*

= horizontal distance upwind or downwind of the structure to the crest of the hill, ridge or escarpment

x_i = distance downwind from the start of a new terrain roughness to the position where the developed height of the inner layer equals z (lag distance)

$\ddot{x}_{max}$ = peak acceleration, in metres per second squared, at the top of a structure in the along-wind direction

$\ddot{y}_{max}$ = peak acceleration, in metres per second squared, at the top of a structure in the crosswind direction

y_{max} = maximum amplitude of tip deflection in crosswind vibration at the critical wind speed

z = reference height on the structure above the average local ground level

$z_{0,r}$ = larger of the two roughness lengths at a boundary between roughnesses

α = angle of slope of a roof, in degrees

β = angle of compass wind direction, in degrees, measured clockwise from North (0°), for determining site wind velocities

ΔC_d = additional drag coefficient due to an ancillary attached to one face or located inside the tower section

Δz = height of the section of the structure upon which the wind pressure acts

δ = solidity ratio of the structure (surface or open frame) which is the ratio of solid area to total area of the structure

Accessed by SWINBURNE UNIVERSITY OF TECHNOLOGY on 15 Aug 2007

@Seismicisolation

@Seismicisolation

δ_e = effective solidity ratio for an open frame

$\varepsilon_{a,m}$ = action effect derived from the mean along-wind response (ε = epsilon)

$\varepsilon_{a,p}$ = action effect derived from the peak along-wind response

$\varepsilon_{c,p}$ = action effect derived from the peak crosswind response

ε_t = combined peak scalar dynamic action effect

ζ = ratio of structural damping to critical damping of a structure (ζ = zeta)

θ = angle of the upwind direction to the orthogonal axes of a structure, in degrees

θ_a = angle of deviation of the wind stream from the normal of the ancillary, in degrees

θ_b = angle from the wind direction to a point on the wall of a circular bin, silo or tank, in degrees

θ_m = angle between the wind direction and the longitudinal axis of the member, in degrees

λ = spacing ratio for parallel open frames, equal to the frame spacing (centre-to-centre) on the projected frame width normal to the wind direction

π = the ratio of the circumference of any circle to its diameter (approx. 3.14159)

ρ_{air} = density of air, which shall be taken as 1.2 kg/m$_3$

NOTE: This value is based on 20°C and typical ground level atmospheric pressure and variation may be necessary for very high altitudes or cold environments.

ϕ_1 (z) = first mode shape as a function of height z, normalized to unity at $z = h$ (ϕ = phi)

Accessed by SWINBURNE UNIVERSITY OF TECHNOLOGY on 15 Aug 2007

@Seismicisolation

@Seismicisolation

STANDARDS AUSTRALIA

Australian Standard

Minimum design loads on structures

Part 4: Earthquake loads

SECTION 1 SCOPE AND GENERAL

1.1 SCOPE This Standard sets out data and procedures for determining minimum earthquake loads on structures and their components. It also sets out minimum detailing requirements for structures. It does not consider related phenomena such as settlement, slides, subsidence, liquefaction or faulting in the immediate vicinity of a structure.

This Standard is intended to apply to structures, particularly buildings, non-building structures, fixings and non-structural components including building services and architectural elements.

Special structures including nuclear reactors, dams, transmission towers, bridges, piers and wharves may require special considerations, and are not covered by this Standard.

NOTE: The date of application of this Standard on a mandatory basis is a matter for the relevant regulatory authorities. With the publication of this Standard, AS 2121—1979 becomes an available superseded Standard and will be withdrawn following substantial regulatory implementation of this edition, or within two years of publication of this edition, whichever is the earlier.

1.2 REFERENCED DOCUMENTS The following documents are referred to in this Standard:

AS
1170 SAA Loading Code
1170.1 Part 1: Dead and live loads and load combinations

1684 National Timber Framing Code

1720 SAA Timber Structures Code

1726 SAA Site Investigation Code

3600 Concrete structures

3700 SAA Masonry Code

4100 Steel structures

NZS
3604 Code of Practice for Light Timber Frame Buildings

1.3 DEFINITIONS For the purpose of this Standard, the definitions below apply.

1.3.1 Acceleration coefficient—an index related to the expected severity of earthquake ground motion.

1.3.2 Base—see definition of structural base (Clause 1.3.36).

Accessed by SWINBURNE UNIVERSITY OF TECHNOLOGY on 15 Aug 2007

@Seismicisolation

@Seismicisolation

1.3.3 Base shear—the total horizontal earthquake shear force (V) at the base of the structure.

1.3.4 Bearing wall system—a structural system with loadbearing walls providing support for all or most of the vertical loads and shear walls or braced frames providing the horizontal earthquake resistance.

1.3.5 Braced frame—an essentially vertical truss, or its equivalent, designed to resist horizontal earthquake forces. Truss members are subjected primarily to axial forces.

1.3.6 Building frame system—a structural system in which an essentially complete space frame supports the vertical loads and shear walls or braced frames provide the horizontal earthquake resistance.

1.3.7 Concentric braced frame—a braced frame in which the members are subjected primarily to axial forces.

1.3.8 Diaphragm—a horizontal or nearly horizontal system, including a horizontal bracing system, acting to transmit horizontal forces to the vertical elements resisting earthquake forces.

1.3.9 Dual system—a structural system in which an essentially complete space frame provides support for the vertical loads and at least a quarter of the prescribed horizontal earthquake forces. The total horizontal earthquake resistance is provided by the combination of the moment frame, shear walls or braced frames, in proportion to their relative rigidities.

1.3.10 Ductility—the ability of the structure or element to undergo repeated and reversing inelastic deflections beyond the point of first yield while maintaining a substantial proportion of its initial load-carrying capacity.

1.3.11 Drift—see definition of storey drift (Clause 1.3.30).

1.3.12 Earthquake design category—a category assigned to a structure based on its structure classification, acceleration coefficient and site factor for the site.

1.3.13 Earthquake resisting system—that part of the structural system which is considered in the design to provide resistance to the earthquake forces.

1.3.14 Eccentric braced frame—a braced frame where at least one end of each brace intersects a beam at a location away from the column-girder joint and which complies with the requirements of AS 4100.

1.3.15 Hazardous facility—a structure which stores hazardous material.

1.3.16 Horizontal bracing system—a horizontal or nearly horizontal truss system that serves the same function as a diaphragm.

1.3.17 Intermediate moment resisting frame (IMRF)—a concrete or steel space frame designed in accordance with AS 3600 or AS 4100, respectively, in which members and joints are capable of resisting forces by flexure as well as axial forces along the axis of the members, including specific ductility requirements (see Appendix B).

1.3.18 Loadbearing wall—a wall providing support for vertical loads in addition to its own weight.

1.3.19 Moment resisting frame system—a structural system in which an essentially complete space frame supports the vertical loads and the total prescribed horizontal earthquake forces by the flexural action of members.

1.3.20 Non-loadbearing wall—a wall which does not provide support for vertical loads other than its own weight.

1.3.21 Ordinary moment resisting frame (OMRF)—a space frame in which members and joints are capable of resisting forces by flexure as well as axial forces along the axis of the members without any special ductility requirements (see Appendix B).

Accessed by SWINBURNE UNIVERSITY OF TECHNOLOGY on 15 Aug 2007

@Seismicisolation

@Seismicisolation

1.3.22 Orthogonal effect—the effect on the structure due to earthquake motions acting simultaneously in directions other than parallel to the direction of resistance under consideration.

1.3.23 *P*-delta effect—the secondary effect on shears and moments of frame members induced by the vertical loads acting on the horizontally-displaced building frame.

1.3.24 Shear wall—a wall designed to resist horizontal earthquake forces acting in the plane of the wall. A shear wall can be either loadbearing or non-loadbearing.

1.3.25 Soft storey—one in which the horizontal stiffness of the storey is less than 70% of that in the storey above or less than 80% of the average stiffness of the three storeys above.

1.3.26 Space frame—a three dimensional structural system composed of interconnected members, other than loadbearing walls, which is capable of supporting vertical loads and may also provide horizontal resistance to earthquake forces.

1.3.27 Special moment resisting frame (SMRF)—a concrete or steel space frame designed in accordance with AS 3600 or AS 4100, respectively, in which members and joints are capable of resisting forces by flexure as well as axial forces along the axis of the members with special ductility requirements (see Appendix B).

1.3.28 Static eccentricity—the distance from the shear centre to the centre of mass at the level considered, measured perpendicular to the direction of loading.

1.3.29 Storey—the space between levels including the space between the structural base and the level above. Storey *x* is the storey below level *x* (see Figure 6.3).

1.3.30 Storey drift—the displacement of one level relative to the level above or below.

1.3.31 Storey drift ratio—the storey drift divided by the storey height.

1.3.32 Storey height—the distance from floor level to floor level.

1.3.33 Storey shear—the summation of all the design horizontal forces acting on the levels above the storey under consideration (see Figure 6.3).

1.3.34 Storey strength—the total horizontal load capacity of all earthquake resisting elements sharing the storey shear for the direction under consideration.

1.3.35 Structure—an assemblage of members designed to support gravity loads and resist horizontal forces and may be either a building structure or a non-building structure.

1.3.36 Structural base—the level at which the earthquake ground motions are considered to be imparted to the structure or the level at which the structure as a dynamic vibrator is supported (see Figure 6.3).

1.3.37 Structure classification—a classification assigned to a structure based on its use.

1.3.38 Vertical load-carrying frame—a space frame designed to carry all vertical loads.

1.3.39 Weak storey—one in which the storey strength is less than 80% of that in the storey above.

1.4 NOTATION Symbols used in this Standard are listed below.

The dimensional units for length, force and stress in all expressions or equations are to be taken as millimetres (mm), newtons (N) and megapascals (MPa), respectively, unless specified otherwise.

A_1, A_2 = dynamic eccentricity factor

a = acceleration coefficient

a_c = attachment amplification factor

a_x = height amplification factor at level x

Accessed by SWINBURNE UNIVERSITY OF TECHNOLOGY on 15 Aug 2007

@Seismicisolation

@Seismicisolation

b = maximum dimension of the structure at level x, measured perpendicular to the horizontal earthquake shear force direction at the level under consideration

C = earthquake design coefficient

C_{c1} = earthquake coefficient for architectural components

C_{c2} = earthquake coefficient for mechanical and electrical components

C_{vx} = earthquake design coefficient for vertical distribution of earthquake forces

e_{d1} = primary design eccentricity

e_{d2} = secondary design eccentricity

e_s = static eccentricity

F_{eq} = earthquake load calculated in accordance with this Standard

F_i = horizontal earthquake force applied at level i

F_n = horizontal earthquake force applied at level n

F_p = horizontal earthquake force applied to a component of a structure or equipment at its centre of gravity

F_x = horizontal earthquake force applied at level x

G = dead load (see AS 1170.1)

G^c = portion of the dead load tending to cause instability

G_c = weight of a component of a structure or equipment

G_g = gravity load

G_g^R = portion of the gravity load tending to resist instability

G_{gi} = portion of gravity load (G_g) located or applied at level i

G_{gx} = portion of gravity load (G_g) located or applied at level x

g = gravitational constant (9.81 m/s^2)

h_n = total height of the structure above the structural base

h_i = height above the structural base of the structure to level i

h_{sx} = height of storey x

h_x = height above the structural base of the structure to level x; *or* height above the structural base of the structure at which a component is attached

I = importance factor

K = stiffness of the attachment in the relevant direction

K_d = deflection amplification factor

k = exponent related to structure period

L = total horizontal dimension of the structure, perpendicular to the direction of the earthquake action being considered

M = overturning moment

m = stability coefficient

n = number of levels in structure

P_x = total vertical design load at storey x

Q = live load (see AS 1170.1)

Q^c = portion of the live load tending to cause instability

Accessed by SWINBURNE UNIVERSITY OF TECHNOLOGY on 15 Aug 2007

@Seismicisolation

@Seismicisolation

R_f = structural response factor

S = site factor

T = structure period

T_c = period of vibration of a component and its attachment

V = total horizontal earthquake base shear force

V_x = horizontal earthquake shear force at storey x

Δ = design storey drift

δ_x = deflection of the storey

δ_{xe} = deflection determined by an elastic analysis

ψ_c = live load combination factor used in assessing the design load for strength and stability limit states

1.5 METHODS OF DETERMINATION OF EARTHQUAKE LOADS The earthquake loads shall be determined by—

(a) applying the requirements of this Standard; or

(b) using reliable data and references in a manner compatible with the requirements of this Standard together with information on local conditions.

1.6 EARTHQUAKE LOAD COMBINATIONS

1.6.1 Limit states design For limit state design, the following load combinations involving earthquake shall be taken into account. These load combinations shall take precedence over the load combinations for earthquake given in AS 1170.1 for the corrresponding limit states.

(a) *Strength limit state* The earthquake load combination for strength limit state design shall be as follows:

(i) $G + \psi_c Q + F_{eq}$ . . . 1.6.1(1)

(ii) $0.8(G + \psi_c Q) + F_{eq}$ . . . 1.6.1(2)

where

G = dead load (see AS 1170.1)

ψ_c = live load combination factor used in assessing the design load for strength and stability limit states (see AS 1170.1)

Q = live load (see AS 1170.1)

F_{eq} = earthquake load calculated in accordance with this Standard

(b) *Stability limit state* The earthquake load combination for stability limit state design shall be as follows:

$$1.25G^c + \psi_c Q^c + F_{eq} \leq 0.8(G + \psi_c Q)^R + \phi R \quad \text{. . . 1.6.1(3)}$$

where

G^c = portion of the dead load tending to cause instability

Q^c = portion of the live load tending to cause instability

$(G + \psi_c Q)^R$ = portion of the dead load and factored live load tending to resist instability

ϕR = design capacity of the structural component (see AS 1170.1)

For the calculation of the earthquake load effects that cause instability, see Clause 6.6.

1.6.2 Permissible stress design For permissible stress design, the earthquake load calculated in accordance with this Standard shall be divided by 1.4 to give equivalent working earthquake load.

Accessed by SWINBURNE UNIVERSITY OF TECHNOLOGY on 15 Aug 2007

@Seismicisolation

@Seismicisolation

SECTION 2 GENERAL REQUIREMENTS

2.1 GENERAL Not all structures are required to be designed for earthquake loads. If required by this Standard, earthquake loads shall be determined by either—

(a) static analysis; or

(b) dynamic analysis.

The method of analysis depends on the earthquake design category, the structure configuration and the ductility of the structure. The earthquake design category depends on—

(i) the structure classification (see Clause 2.2);

(ii) the acceleration coefficient (see Clause 2.3); and

(iii) the site factor (see Clause 2.4).

2.2 STRUCTURE CLASSIFICATION

2.2.1 General For the purpose of earthquake design, structures shall be classified as either domestic structures or general structures.

2.2.2 Domestic structures For the purpose of this Standard, domestic structures are detached single dwellings, terrace houses, townhouses and the like with the following limitations:

(a) The distance from ground level to the underside of eaves shall not exceed 6.0 m; from ground level to the highest point of the roof, neglecting chimneys, shall not exceed 8.5 m; and the height of each storey at external walls shall not exceed 2.7 m (see Figure 2.2.2(a)).

NOTE: For earthquake design, the height of each storey at external walls may be increased to 3.2 m.

(b) The width, including roofed verandahs but excluding eaves, shall not exceed 16.0 m, and the total length (L_1 + L_2) shall not exceed 10 times the width (see Figure 2.2.2(b)).

2.2.3 General structures General structures include all structures other than those specified in Clause 2.2.2 and shall be further classified into structure types as follows:

(a) *Type III* Structures include buildings that are essential to post-earthquake recovery or associated with hazardous facilities.

(b) *Type II* Structures include buildings that are designed to contain a large number of people, or people of restricted or impaired mobility.

(c) *Type I* Structures include buildings not of Type II or Type III.

NOTE: For examples of structure classification, see Appendix A.

2.3 ACCELERATION COEFFICIENT The acceleration coefficient (a) depends on the geographic location of the structure (see Figure 2.3(a)) and shall be determined from Table 2.3 in the first instance. If the acceleration coefficient for the location required is not given in Table 2.3, it shall be determined from Figures 2.3(b) to 2.3(g).

Linear interpolation between contours shown in Figures 2.3(b) to 2.3(g) is permitted.

Accessed by SWINBURNE UNIVERSITY OF TECHNOLOGY on 15 Aug 2007

@Seismicisolation

@Seismicisolation

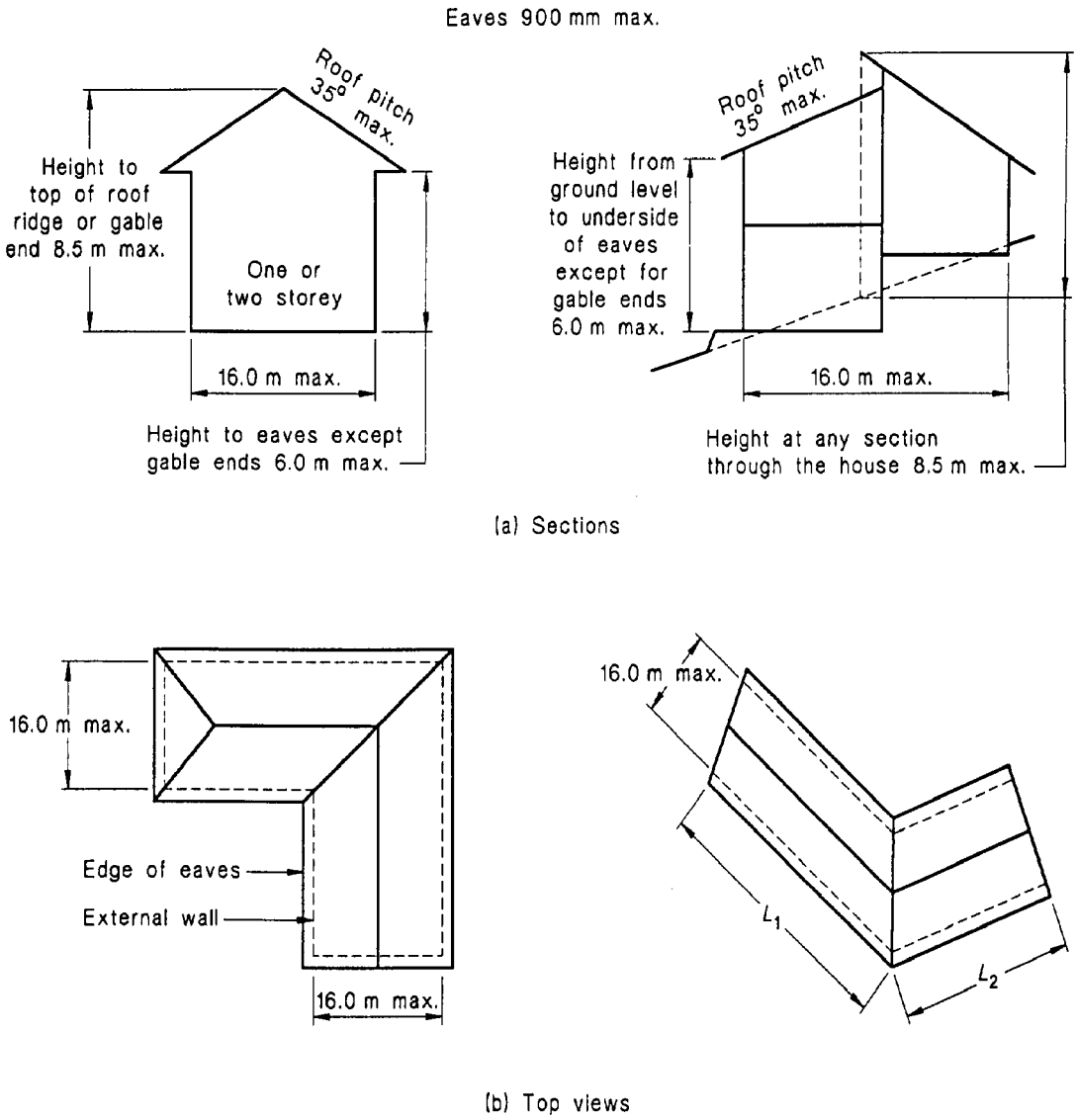

FIGURE 2.2.2 GEOMETRY

Accessed by SWINBURNE UNIVERSITY OF TECHNOLOGY on 15 Aug 2007

@Seismicisolation

@Seismicisolation

TABLE 2.3

ACCELERATION COEFFICIENT FOR MAJOR CENTRES

Major centres	Acceleration coefficient (*a*)
Adelaide	0.10
Albury/Wodonga	0.08
Ballarat	0.08
Bendigo	0.09
Brisbane	0.06
Cairns	0.06
Canberra	0.08
Darwin	0.08
Geelong	0.10
Gold Coast/ Tweed Heads	0.06
Hobart	0.05
Latrobe Valley	0.10
Launceston	0.06
Melbourne	0.08
Newcastle	0.11
Perth	0.09
Rockhampton	0.08
Sydney	0.08
Toowoomba	0.06
Townsville	0.07
Wollongong	0.08

Accessed by SWINBURNE UNIVERSITY OF TECHNOLOGY on 15 Aug 2007

@Seismicisolation

@Seismicisolation

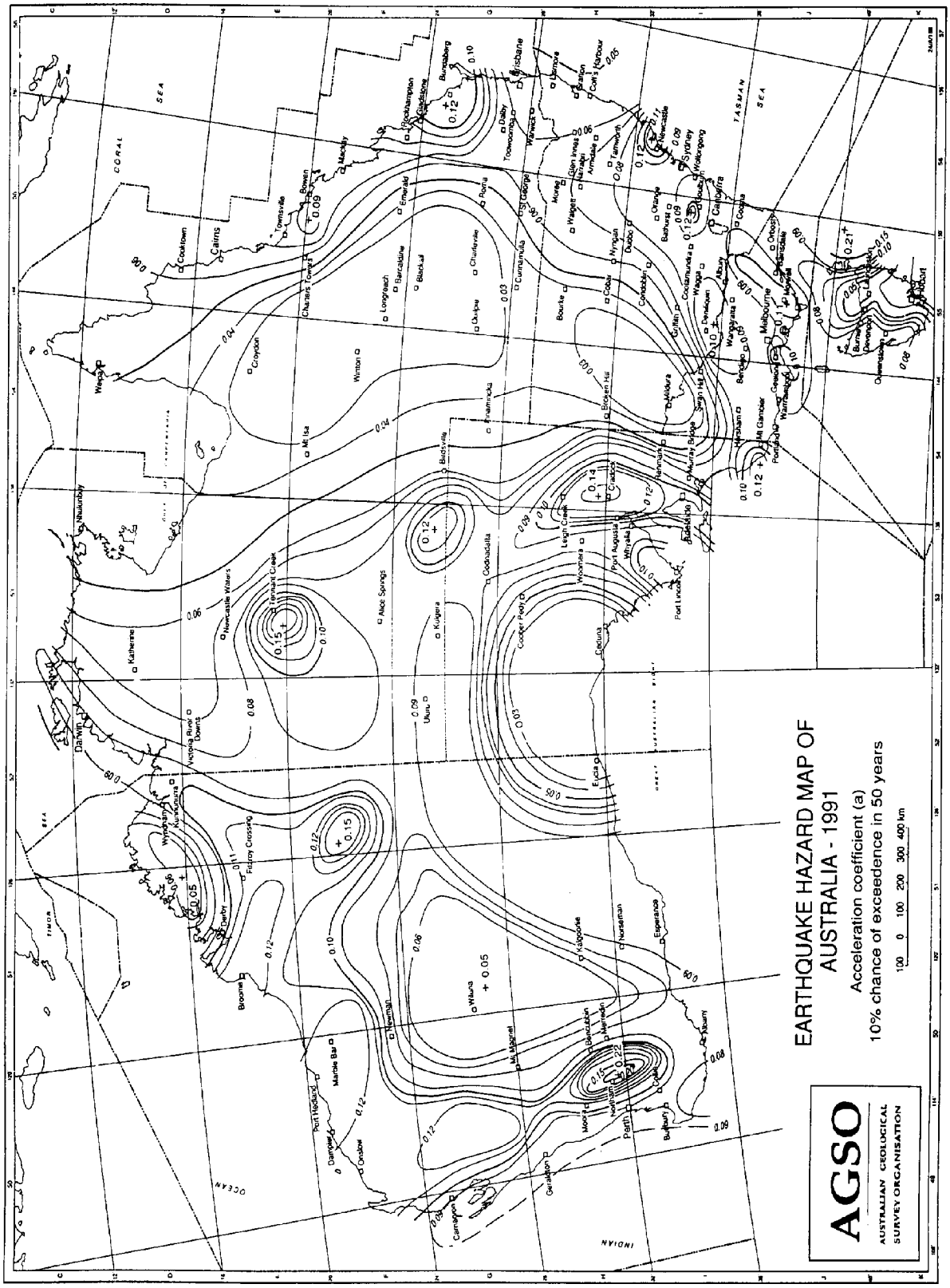

FIGURE 2.3(a) ACCELERATION COEFFICIENT MAP OF AUSTRALIA

Accessed by SWINBURNE UNIVERSITY OF TECHNOLOGY on 15 Aug 2007

@Seismicisolation

@Seismicisolation

FIGURE 2.3(b) ACCELERATION COEFFICIENT MAP OF NEW SOUTH WALES, VICTORIA AND TASMANIA

Accessed by SWINBURNE UNIVERSITY OF TECHNOLOGY on 15 Aug 2007

@Seismicisolation

@Seismicisolation

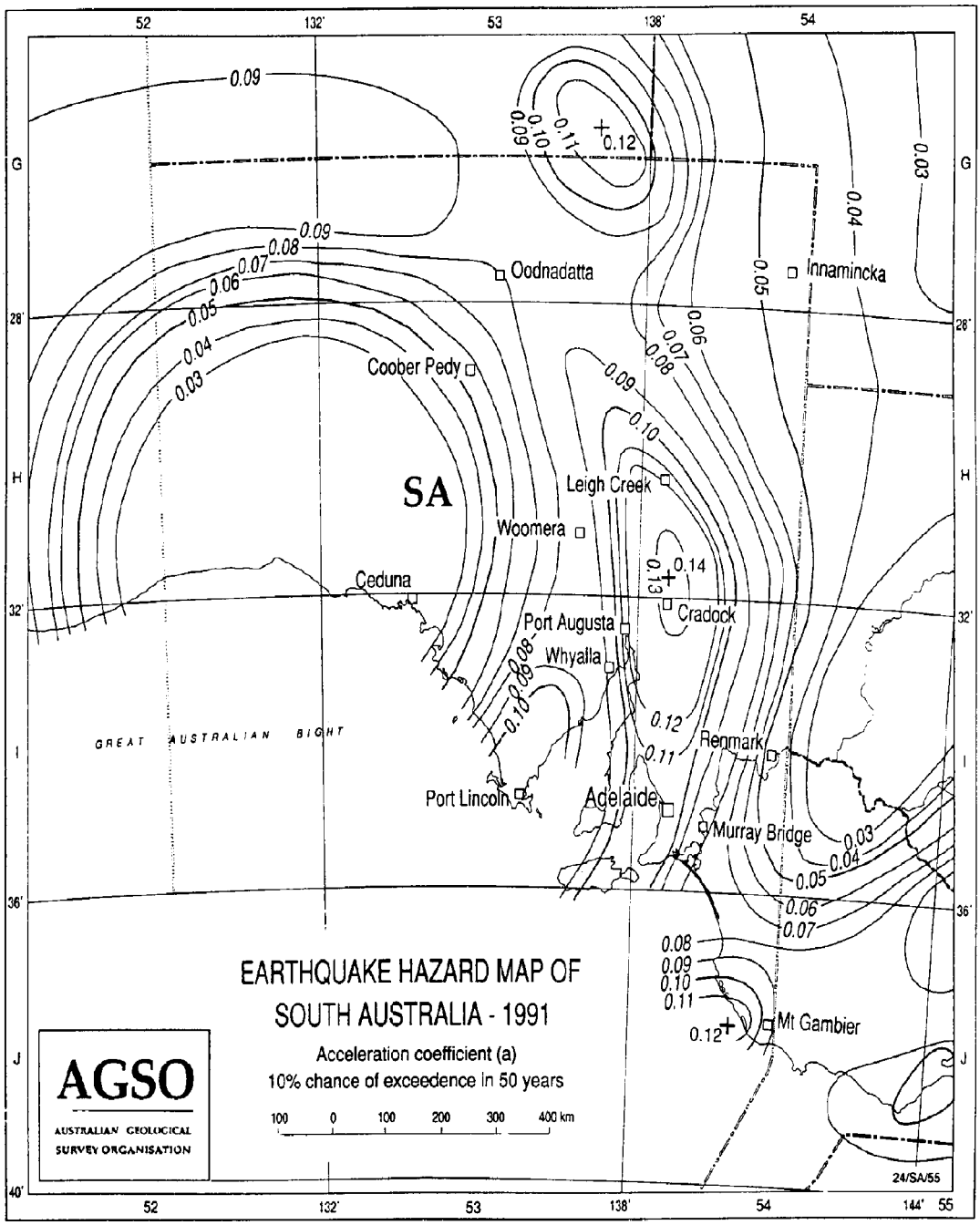

FIGURE 2.3(c) ACCELERATION COEFFICIENT MAP OF SOUTH AUSTRALIA

Accessed by SWINBURNE UNIVERSITY OF TECHNOLOGY on 15 Aug 2007

@Seismicisolation

@Seismicisolation

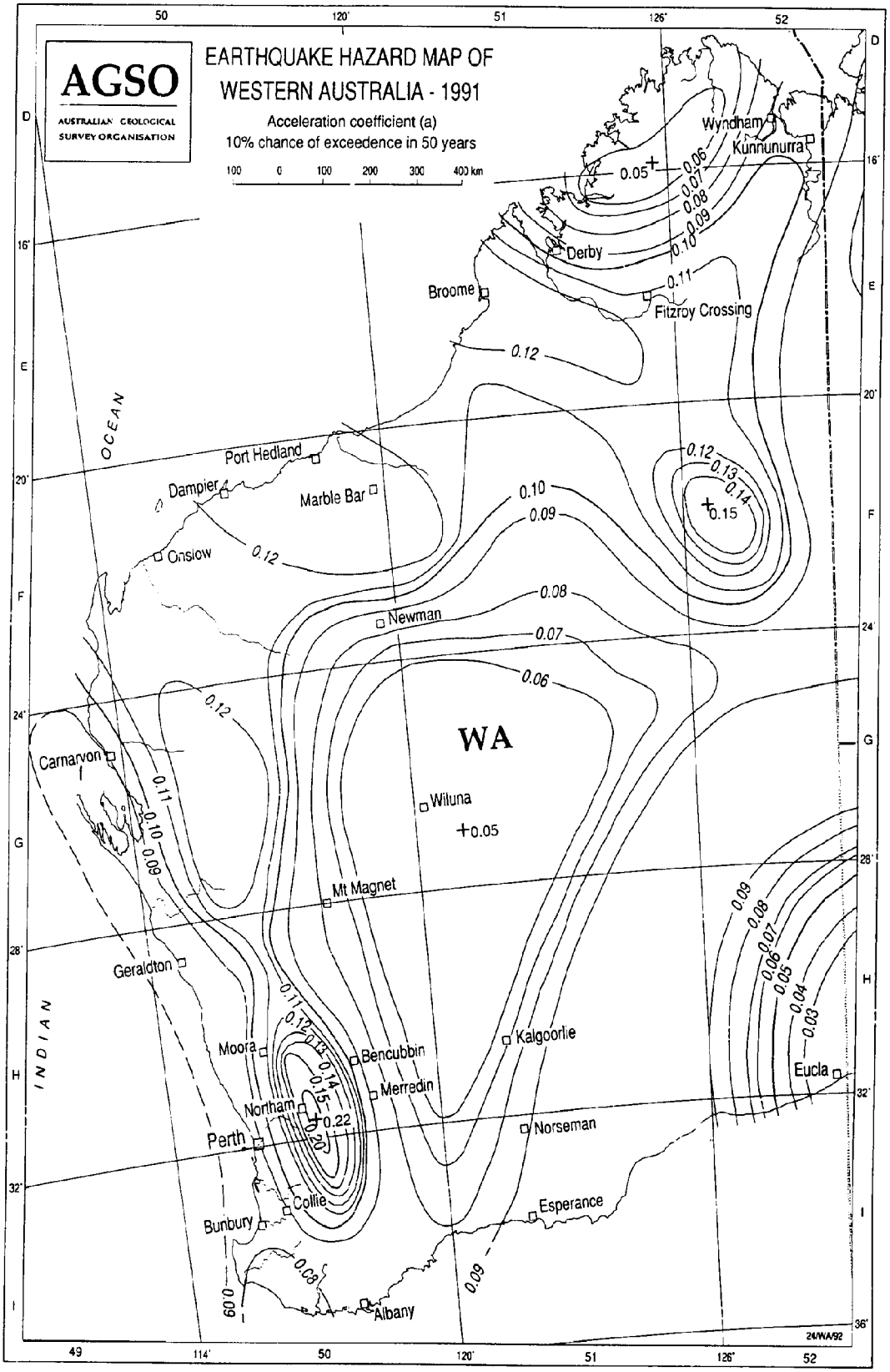

FIGURE 2.3(d) ACCELERATION COEFFICIENT MAP OF WESTERN AUSTRALIA

Accessed by SWINBURNE UNIVERSITY OF TECHNOLOGY on 15 Aug 2007

@Seismicisolation

@Seismicisolation

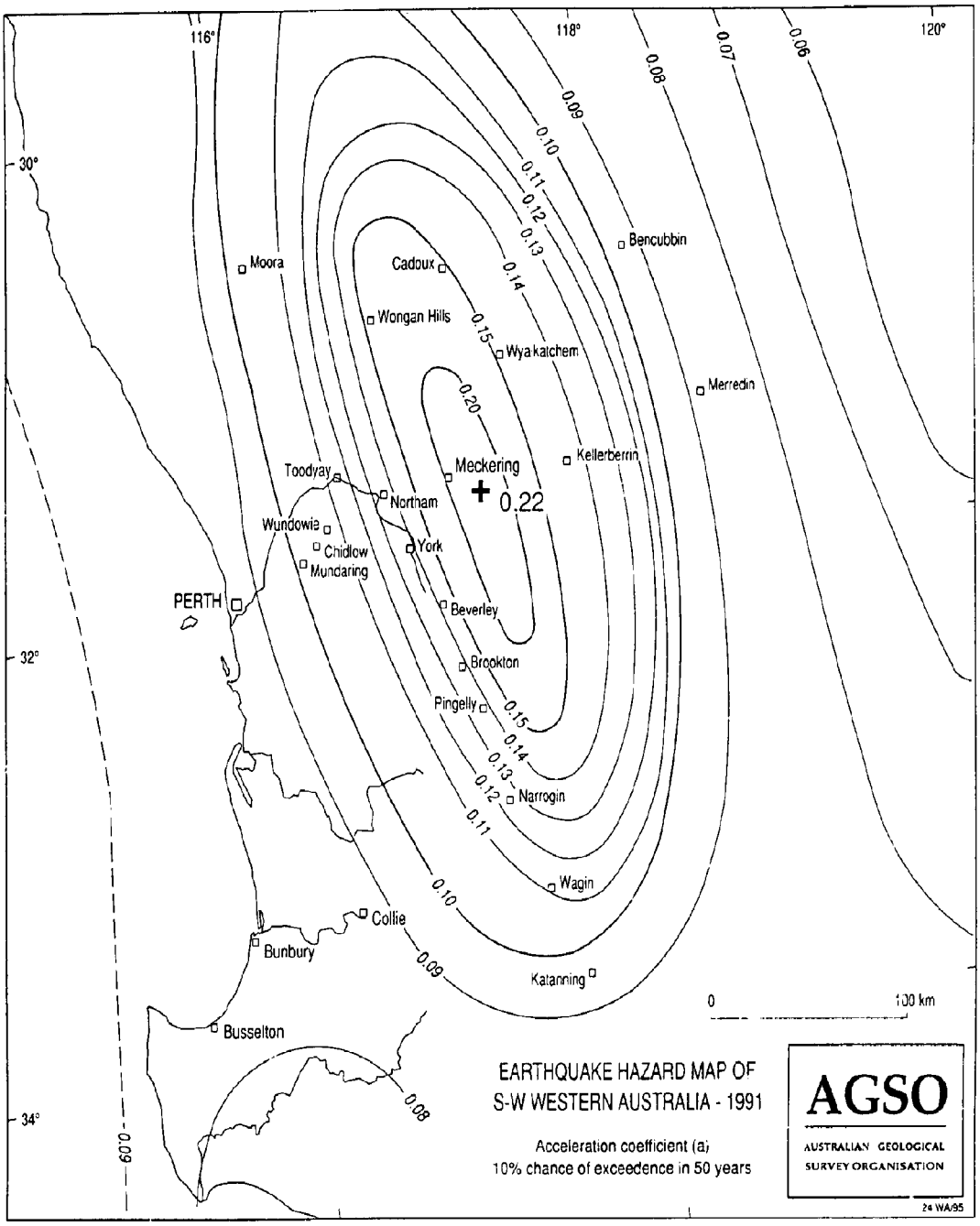

FIGURE 2.3(e) ACCELERATION COEFFICIENT MAP
OF SOUTH-WEST OF WESTERN AUSTRALIA

Accessed by SWINBURNE UNIVERSITY OF TECHNOLOGY on 15 Aug 2007

@Seismicisolation

@Seismicisolation

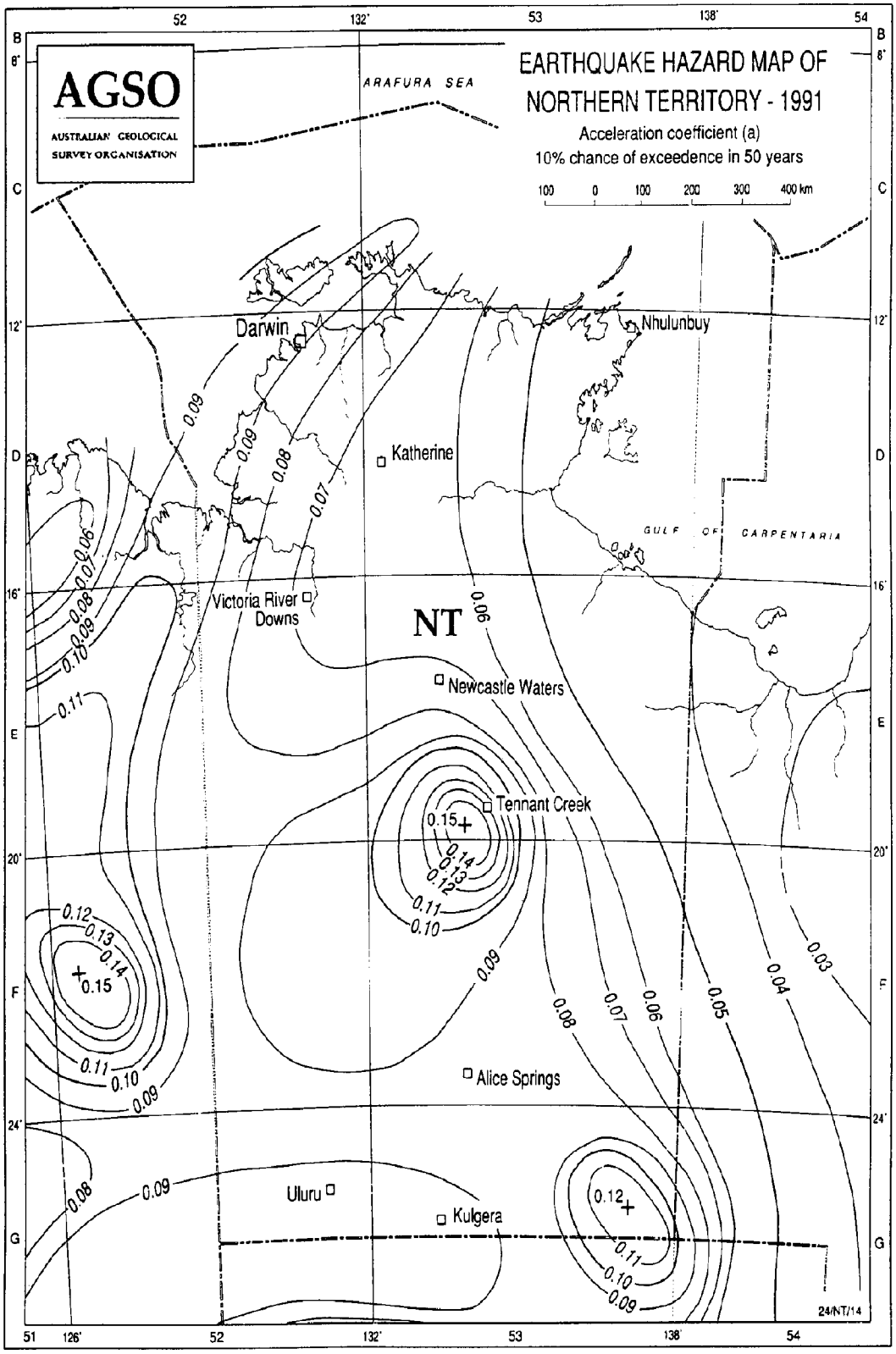

FIGURE 2.3(f) ACCELERATION COEFFICIENT MAP OF NORTHERN TERRITORY

Accessed by SWINBURNE UNIVERSITY OF TECHNOLOGY on 15 Aug 2007

@Seismicisolation

@Seismicisolation

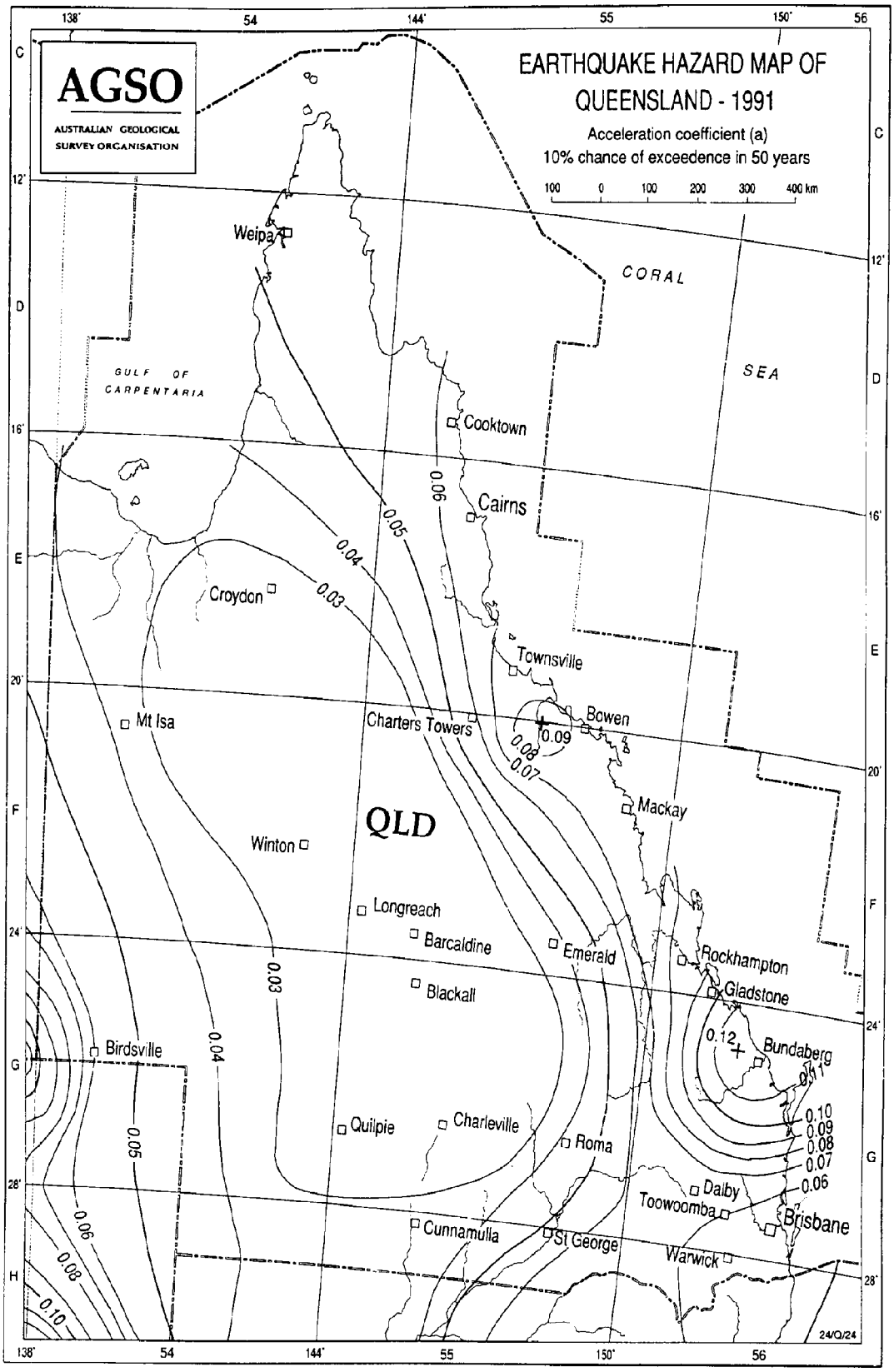

FIGURE 2.3(g) ACCELERATION COEFFICIENT MAP OF QUEENSLAND

Accessed by SWINBURNE UNIVERSITY OF TECHNOLOGY on 15 Aug 2007

@Seismicisolation

@Seismicisolation

2.4 SITE FACTOR The site factor (*S*) shall be as given in Table 2.4(a) or Table 2.4(b) for the appropriate soil profile. The soil profile shall be established from substantiated geotechnical data and classified in accordance with AS 1726.

Interpolation for soil profiles in between those given in Tables 2.4(a) and 2.4(b) is permitted.

TABLE 2.4(a)

SITE FACTORS FOR GENERAL STRUCTURES

Soil profile	Site factor (*S*)
A profile of rock materials with rock strength Class L (low) or better	0.67
A soil profile with either: (a) rock materials Class EL (extreme low) or VL (very low) characterized by shear wave velocities greater than 760 m/s; or (b) not more than 30 m of: medium dense to very dense coarse sands and gravels; firm, stiff or hard clays; or controlled fill	1.0
A soil profile with more than 30 m of: medium dense to very dense coarse sands and gravels; firm, stiff or hard clays; or controlled fill	1.25
A soil profile with a total depth of 20 m or more *and* containing 6 to 12 m of: very soft to soft clays; very loose or loose sands; silts; or uncontrolled fill	1.5
A soil profile with more than 12 m of: very soft to soft clays; very loose or loose sands; silts; or uncontrolled fill characterized by shear wave velocities less than 150 m/s	2.0

TABLE 2.4(b)

SITE FACTORS FOR DOMESTIC STRUCTURES

Soil Profile	Site factor (*S*)
Normal soil: any soil profile other than soft	1.0
Soft soil: any soil profile with more than 5 m of: soft clay; loose sand; silt; or uncontrolled fill	2.0

NOTES to Tables 2.4(a) and 2.4(b):

1 For the purposes of this Standard, it is not intended that a detailed site investigation be carried out for any structure to determine a soil profile over large depths. Most major centres and regional areas have basic information available on the likely strata which should be used to assess the site factor (*S*).

2 Small variations such as isolated layers within the overall profile not exceeding 2 m average depth or changes at or near the surface not exceeding 3 m average depth need not be considered.

Accessed by SWINBURNE UNIVERSITY OF TECHNOLOGY on 15 Aug 2007

@Seismicisolation

@Seismicisolation

3 The soil profile considered in determining the site factor should be the soil on which the footings bear or in which pile caps are embedded, and all underlying soil materials.

4 Rock strengths Class L , Class EL and Class VL are defined in AS 1726.

5 Where the soil profile is not given in the Table, advice from appropriate geotechnical experts should be obtained to establish a suitable site factor (*S*).

6 In locations where the soil profiles are not known, a site factor (*S*) equal to 1.5 should be used for general structures and 1.0 for domestic structures. A site factor (*S*) of 2.0 need not be assumed unless it can be determined that such a soil profile may be present or is established by geotechnical data.

2.5 IMPORTANCE FACTOR The importance factor (*I*) shall be as given in Table 2.5.

TABLE 2.5

IMPORTANCE FACTOR

Structure Type	Importance factor (*I*)
III	1.25
II and I	1.00

2.6 EARTHQUAKE DESIGN CATEGORY The earthquake Design Category shall be as given in Table 2.6 for the appropriate value of the product of acceleration coefficient and site factor (*aS*) and the structure classification.

TABLE 2.6

EARTHQUAKE DESIGN CATEGORY

Product of acceleration coefficient and site factor (*aS*)	Design Category			
	Structure classification			
	Domestic structures	General structures		
		Type III	Type II	Type I
$aS \geq 0.2$	H3	E	D	C
$0.1 \leq aS < 0.2$	H2	D	C	B
$aS < 0.1$	H1	C	B	A

Requirements for earthquake Design Categories A to E are specified in Clause 2.7 and for H1 to H3 in Section 3.

2.7 REQUIREMENTS FOR GENERAL STRUCTURES

2.7.1 General In addition to the requirements of this Clause and Section 4, specific requirements for non-structural components, i.e. architectural, mechanical and electrical components, are set out in Section 5.

NOTES:

1 Prior to using this Clause, establish the structural system of the building, whether the structure is regular or irregular and whether it is ductile or non-ductile.

2 For structural systems of buildings, see Clause 2.8.

3 For regular and irregular structures, see Clause 2.9.

4 For ductile and non-ductile structures, see Paragraph B1 of Appendix B.

Accessed by SWINBURNE UNIVERSITY OF TECHNOLOGY on 15 Aug 2007

@Seismicisolation

@Seismicisolation

2.7.2 General structures of earthquake Design Category A Regular and irregular ductile structures of earthquake Design Category A need not be analyzed for earthquake forces, nor are there any structural detailing requirements for earthquake resistance.

Regular and irregular non-ductile structures of earthquake Design Category A need not be analyzed for earthquake forces but shall be detailed in accordance with Clause 4.2.

2.7.3 General structures of earthquake Design Category B Regular ductile structures of earthquake Design Category B need not be analyzed for earthquake forces.

Non-ductile structures and irregular ductile structures of earthquake Design Category B shall be analyzed either by static analysis in accordance with Section 6, or by dynamic analysis in accordance with Section 7.

Detailing requirements for structures of earthquake Design Category B shall be in accordance with Clause 4.3.

For loadbearing masonry components, including elements that resist predominantly horizontal forces, the following restrictions apply:

(a) For regular structures of one to four storeys, unreinforced masonry is acceptable provided the design complies with Section 6 or 7 as appropriate.

(b) For irregular structures of one to three storeys, unreinforced masonry is acceptable provided the design complies with Section 6 or 7 as appropriate.

(c) For structures with more storeys than specified in Items (a) and (b), reinforced masonry, reinforced concrete shear walls or braced frames shall be used and shall comply with Section 6 or 7 as appropriate, except that the use of some unreinforced masonry is permitted provided that the reinforced masonry, reinforced concrete shear walls or braced frames are capable of resisting the earthquake forces and that satisfactory structural behaviour of the whole structure is demonstrated.

2.7.4 General structures of earthquake Design Category C Regular and irregular structures of earthquake Design Category C shall be analyzed by static analysis in accordance with Section 6, or by dynamic analysis in accordance with Section 7.

Detailing requirements for structures of earthquake Design Category C shall be in accordance with Clause 4.4.

For loadbearing masonry components, including elements that resist predominantly horizontal forces, the following restrictions apply:

(a) For structures of one to three storeys, unreinforced masonry is acceptable provided the design complies with Section 6 or 7 as appropriate.

(b) For structures with more storeys than specified in Item (a), reinforced masonry, reinforced concrete shear walls or braced frames shall be used and shall comply with Section 6 or 7 as appropriate, except that the use of some unreinforced masonry is permitted provided that the reinforced masonry, reinforced concrete shear walls or braced frames are capable of resisting the earthquake forces and that satisfactory structural behaviour of the whole structure is demonstrated.

2.7.5 General structures of earthquake Design Category D Regular structures of earthquake Design Category D shall be analyzed by static analysis in accordance with Section 6, or by dynamic analysis in accordance with Section 7.

Irregular structures of earthquake Design Category D shall be analyzed by dynamic analysis in accordance with Section 7.

In both regular and irregular structures of earthquake Design Category D, vertical earthquake effects (see Clause 6.8) shall be considered for critical components, such as horizontal cantilevers and horizontal prestressed members.

Detailing requirements for structures of earthquake Design Category D shall be in accordance with Clause 4.4.

For loadbearing masonry components, including elements that resist predominantly horizontal forces, the following restrictions apply:

(a) For structures of one or two storeys, unreinforced masonry is acceptable provided the design complies with Section 6 or 7 as appropriate.

Accessed by SWINBURNE UNIVERSITY OF TECHNOLOGY on 15 Aug 2007

@Seismicisolation

@Seismicisolation

(b) For structures with more storeys than specified in Item (a), reinforced masonry, reinforced concrete shear walls or braced frames shall be used and shall comply with Section 6 or 7 as appropriate, except that the use of some unreinforced masonry is permitted provided that the reinforced masonry, reinforced concrete shear walls or braced frames are capable of resisting the earthquake forces and that satisfactory structural behaviour of the whole structure is demonstrated.

2.7.6 General structures of earthquake Design Category E Structures of earthquake Design Category E shall be designed with the following limitations on the structural systems:

(a) Bearing wall system with a structure height limited to 50 m.

(b) Building frame system with a structure height limited to 70 m.

(c) Moment resisting frame and dual system. A moment resisting frame system with a structure height over 30 m shall have special moment resisting frames (SMRFs) continued down to the footings.

Regular structures of earthquake Design Category E shall be analyzed by static analysis in accordance with Section 6, or by dynamic analysis in accordance with Section 7.

Irregular structures of earthquake Design Category E shall be analyzed by dynamic analysis in accordance with Section 7.

In both regular and irregular structures of earthquake Design Category E, vertical earthquake effects (see Clause 6.8) shall be considered for critical components, such as horizontal cantilevers and horizontal prestressed members.

Detailing requirements for structures of earthquake Design Category E shall be in accordance with Clause 4.4.

All masonry components shall be reinforced.

2.8 STRUCTURAL SYSTEMS OF BUILDINGS For the purposes of earthquake design, the structural systems of buildings shall be classified as follows:

(a) *Bearing wall system* A structural system with loadbearing walls providing support for all or most of the vertical loads and shear walls or braced frames providing the horizontal earthquake resistance.

(b) *Building frame system* A structural system in which an essentially complete space frame supports the vertical loads and shear walls or braced frames provide the horizontal earthquake resistance.

(c) *Moment resisting frame system* A structural system in which an essentially complete space frame supports the vertical loads and the total prescribed horizontal earthquake forces by the flexural action of members.

(d) *Dual system* A structural system in which an essentially complete space frame provides support for the vertical loads and at least a quarter of the prescribed horizontal earthquake forces. The total horizontal earthquake resistance is provided by the combination of the moment frame, shear walls or braced frames, in proportion to their relative rigidities.

Once selected, the structural system shall be designed and detailed to ensure that the system will behave in the way intended.

A height limitation of 50 m above the structural base of the structure applies for ordinary moment resisting frames (OMRFs) where the product of acceleration coefficient and site factor (aS) is greater than or equal to 0.1.

NOTE: A broad outline of the requirements for structures of concrete, steel, and other materials is given in Paragraph B2 of Appendix B.

Accessed by SWINBURNE UNIVERSITY OF TECHNOLOGY on 15 Aug 2007

@Seismicisolation

@Seismicisolation

2.9 CONFIGURATION

2.9.1 General For the purposes of earthquake design, structures shall be classified as regular or irregular. Both plan and vertical configurations of a structure shall be considered when determining whether a structure is to be classified as regular or irregular.

2.9.2 Plan configuration A structure shall be classified as irregular when any of the following apply:

(a) *Torsional irregularity* Torsional irregularity shall be considered to exist when the distance between the static centre of mass and the shear centre (centre of rigidity) is in excess of 10% of the structure dimension perpendicular to the direction of the earthquake force.

(b) *Re-entrant corners* Plan configurations of a structure and its horizontal force-resisting system which contain re-entrant corners, where both projections of the structure beyond a re-entrant corner are greater than 15% of the plan dimension of the structure in the given direction.

(c) *Diaphragm discontinuity* Diaphragms with abrupt discontinuities or variations in stiffness, including those having cut-out or open areas greater than 50% of the gross enclosed area of the diaphragm.

(d) *Out-of-plane offsets* Discontinuity in a horizontal force path, such as offsets of the vertical elements.

(e) *Non-parallel systems* Structures in which the vertical planes of horizontal load-resisting elements are neither parallel to, nor symmetric about the major orthogonal axes of the horizontal force-resisting system.

NOTE: Examples of plan irregularities are given in Paragraph A2.2 and Figure A1 of Appendix A.

2.9.3 Vertical configuration A structure shall be classified as irregular when any of the following occurs:

(a) *Stiffness irregularity (soft storey)* A 'soft storey' is one in which the horizontal stiffness of the storey is less than 70% of that in the storey above or less than 80% of the average stiffness of the three storeys above.

(b) *Strength irregularity (weak storey)* A 'weak storey' is one in which the storey strength is less than 80% of that in the storey above. The storey strength is the total horizontal load capacity of all earthquake resisting elements sharing the storey shear for the direction under consideration.

(c) *Gravity load irregularity* Gravity load irregularity shall be considered where the gravity load of any storey is more than 150% of the gravity load of an adjacent storey. A roof which is lighter than the floor below need not be considered.

(d) *Vertical geometric irregularity* Vertical geometric irregularity shall be considered where the horizontal dimension of the horizontal force-resisting system in any storey is more than 130% of that in an adjacent storey. A single storey attachment, such as a plant room or the like, to a multistorey building need not be considered.

(e) *In-plane discontinuity in vertical plane of horizontal force-resisting element* In-plane discontinuity shall be considered when the in-plane offset of the horizontal force-resisting element is greater than the length of that element.

NOTE: Examples of vertical irregularities are given in Paragraph A2.3 and Figure A2 of Appendix A.

Accessed by SWINBURNE UNIVERSITY OF TECHNOLOGY on 15 Aug 2007

@Seismicisolation

@Seismicisolation

2.10 DEFLECTION AND DRIFT LIMITS

2.10.1 Portion of structures All portions of the structure shall be designed and constructed to act as an integral unit in resisting horizontal earthquake forces.

2.10.2 Adjacent structures All structures shall be separated from adjacent structures by a distance sufficient to avoid damaging contact. Separations shall allow for $3(R_f)/8$ times the deflection (δ_x) due to earthquake forces (see Clause 6.7.2), where R_f is the structural response factor.

The design storey drift (Δ) calculated in accordance with Clause 6.7 shall not exceed $0.015h_{sx}$ for any storey, where h_{sx} is the height of storey x.

NOTE: The deflection (δ_x) is calculated using the ultimate earthquake forces.

Accessed by SWINBURNE UNIVERSITY OF TECHNOLOGY on 15 Aug 2007

@Seismicisolation

@Seismicisolation

SECTION 3 DOMESTIC STRUCTURES

3.1 GENERAL Earthquake design for domestic structures shall comply with the requirements of this Section. Where required, horizontal earthquake resistance shall be provided in two orthogonal directions. Non-structural components of earthquake Design Categories H1, H2 and H3 shall be designed in accordance with Clause 3.5.

NOTE: For guidance on ways of improving horizontal earthquake resistance of domestic structures, see Appendix C.

3.2 REQUIREMENTS FOR EARTHQUAKE DESIGN CATEGORIES

3.2.1 Earthquake Design Category H1 Ductile and non-ductile domestic structures of earthquake Design Category H1 require no specific earthquake design or structural detailing.

3.2.2 Earthquake Design Category H2 Ductile domestic structures of earthquake Design Category H2 require no specific earthquake design or structural detailing. Non-ductile domestic structures of earthquake Design Category H2 shall be detailed in accordance with Clause 3.3.

3.2.3 Earthquake Design Category H3 Ductile domestic structures of earthquake Design Category H3 shall be detailed in accordance with Clause 3.3. Non-ductile domestic structures of earthquake Design Category H3 shall be analyzed by static analysis in accordance with Clause 3.4, and shall be detailed in accordance with Clause 3.3.

3.3 STRUCTURAL DETAILING REQUIREMENTS FOR DOMESTIC STRUCTURES

3.3.1 General The principal requirement for structural detailing is that all parts of the structure shall be tied together both in the horizontal and vertical planes so that forces from all parts of the structure, including structural and non-structural components, generated by earthquake are carried to the foundation.

A connection for resisting a horizontal force shall be provided for each beam or truss to its support which shall have a minimum strength acting along the span of the member equal to 5% of the gravity load reaction for earthquake Design Category H2 and 7.5% for earthquake Design Category H3. Secondary framing members, such as purlins, battens and the like are not required to be designed for earthquake loads but shall be tied to their supporting member and designed as required for other loads.

3.3.2 Wall anchorage External walls shall be anchored to the roof and all floors which provide horizontal support for the wall. The anchorage shall provide a connection capable of resisting a force of 10(aS) kN per metre run of wall. Internal loadbearing walls shall be tied to other walls and horizontally restrained at the ceiling and floor planes.

3.4 STATIC ANALYSIS FOR NON-DUCTILE DOMESTIC STRUCTURES OF EARTHQUAKE DESIGN CATEGORY H3

3.4.1 Horizontal forces The structure shall be designed to resist earthquake forces applied in any horizontal direction.

Walls that are not part of the earthquake resisting system for the direction being considered, shall be designed in accordance with the provisions specified in Clause 3.5.

3.4.2 Earthquake base shear The total horizontal earthquake base shear force (V) in a given direction shall be determined from the following equation:

$$V = 0.15G_g \qquad \text{. . . 3.4.2}$$

where

G_g = gravity load (see Clause 6.2.5)

Accessed by SWINBURNE UNIVERSITY OF TECHNOLOGY on 15 Aug 2007

@Seismicisolation

@Seismicisolation

3.4.3 Vertical distribution of horizontal earthquake forces The horizontal earthquake force (F_x) applied at level x (see Figure 6.3), shall be determined from the following equation:

$$F_x = \left(\frac{G_{gx}}{G_g}\right)V \qquad \ldots 3.4.3$$

where

G_{gx} = portion of gravity load (G_g) located or applied at level x

G_g = gravity load (see Clause 6.2.5)

V = total horizontal earthquake base shear force calculated from Equation 3.4.2

3.4.4 Torsional effects Where the domestic structure is irregular, the design earthquake shear force for each resisting element shall be increased by 25% to allow for torsion. A regular domestic structure for the purposes of this Clause, is defined as a rectangular structure in plan where the ratio of the maximum dimension divided by the minimum dimension of the plan shall not exceed 1.2.

3.5 NON-STRUCTURAL COMPONENTS For domestic structures of earthquake Design Categories H1, H2 and H3, non-ductile components, such as unreinforced masonry, gable ends, chimneys and parapets shall be restrained to resist a minimum force of $1.8(aS)G_c$, where G_c is the weight of the component.

Masonry veneer walls which consist of an outer leaf of masonry tied to an inner ductile framing such as timber, steel, etc. and which comply with AS 3700, require no specific design for earthquake.

Unreinforced masonry walls of earthquake Design Category H1 with heights from floor to ceiling or from floor to roof not exceeding 3.2 m and which are horizontally restrained at the ceiling or roof level and are restrained at least at one vertical edge, and which comply with AS 3700, also require no specific design for earthquake.

Design of non-structural components to Section 5 is not required.

Accessed by SWINBURNE UNIVERSITY OF TECHNOLOGY on 15 Aug 2007

@Seismicisolation

@Seismicisolation

SECTION 4 STRUCTURAL DETAILING REQUIREMENTS FOR GENERAL STRUCTURES

4.1 GENERAL General detailing of components of the structural force-resisting system and of other structural components, including minimum forces to be resisted, shall be in accordance with this Section. The principal requirement for structural detailing is that all parts of the structure shall be tied together both in the horizontal and the vertical planes so that forces generated by earthquake from all parts of the structure, including structural and non-structural components, are carried to the foundation.

4.2 STRUCTURAL DETAILING REQUIREMENTS FOR STRUCTURES OF EARTHQUAKE DESIGN CATEGORY A

4.2.1 Ductile structures There are no specific structural detailing requirements for ductile structures of earthquake Design Category A.

4.2.2 Non-ductile structures Non-ductile structures of earthquake Design Category A shall comply with the detailing requirements for structures of earthquake Design Category B (see Clause 4.3).

NOTE: For ductile and non-ductile structures, see Paragraph B1 of Appendix B.

4.3 STRUCTURAL DETAILING REQUIREMENTS FOR STRUCTURES OF EARTHQUAKE DESIGN CATEGORY B

4.3.1 General In addition to the requirements set out in the appropriate material Standards, structures of earthquake Design Category B shall comply with the detailing requirements set out in Clauses 4.3.2 and 4.3.3.

4.3.2 Load paths, ties and continuity The design of the structure shall provide load paths for forces from all parts of the structure, including structural and non-structural components, generated by earthquakes, to be carried to the foundation.

A connection for resisting a horizontal force shall be provided for each beam or truss to its support which shall have a minimum strength acting along the span of the member equal to 5% of the reaction due to gravity load (G_g).

4.3.3 Wall anchorage Walls shall be anchored to the roof and restrained at all floors which provide horizontal support for the wall. The anchorage or restraint shall provide a connection between the walls and the roof or floor construction and shall be capable of resisting a horizontal earthquake force induced by the wall of 10(aS) kN per metre run of wall. Walls shall be designed to resist bending between anchors where the anchor spacing exceeds 1.2 m.

For non-ductile structures of earthquake Design Category A, a 50% reduction of the force to be resisted is permitted but the force shall not be less than 0.8 kN per metre run of wall.

4.4 STRUCTURAL DETAILING REQUIREMENTS FOR STRUCTURES OF EARTHQUAKE DESIGN CATEGORIES C, D AND E

4.4.1 General In addition to the requirements of Clause 4.3, structures of earthquake Design Categories C, D and E shall also comply with the detailing requirements set out in Clauses 4.4.2 to 4.4.6.

Accessed by SWINBURNE UNIVERSITY OF TECHNOLOGY on 15 Aug 2007

@Seismicisolation

@Seismicisolation

4.4.2 Ties and continuity All parts of the structure shall be interconnected and the connections shall be capable of transmitting the horizontal earthquake force (F_p), specified in Section 5, induced by the parts being connected. Any smaller portion of the structure shall be tied to the remainder of the structure with elements having a strength to resist 0.33(aS) times the gravity load of the smaller part but not less than 5% of the portion's weight.

4.4.3 Diaphragms The deflection in the plane of the diaphragm, as determined by analysis, shall not exceed the permissible deflection of the attached elements. Permissible deflection shall be that deflection which will permit the attached element to maintain its structural integrity under the individual loading and continue to support the prescribed loads without endangering the occupants of the structure.

Floor and roof diaphragms shall be designed as follows:

(a) To resist horizontal earthquake forces of a minimum force equal to 0.5(aS) times the weight of the diaphragm and other elements of the structure attached thereto plus the portion of the horizontal earthquake shear force at storey x (V_x) required to be transferred to the components of the vertical earthquake-resisting system because of offsets or changes in stiffness of the vertical components above and below the diaphragm.

(b) To have ties or struts to distribute the wall anchorage forces, as specified in Clauses 4.3.3 and 5.2.1.

4.4.4 Bearing walls Interconnection of dependent wall elements and connections to supporting framing systems shall have ductility or rotational capacity, or strength to resist shrinkage, thermal changes, and differential foundation settlement when combined with earthquake forces.

4.4.5 Openings Where openings occur in shear walls, diaphragms or other plate-like elements, strengthening shall be provided at the edges of the openings to resist the local stresses created by the presence of the opening.

4.4.6 Footing ties Footings supported on piles, or caissons, or spread footings which are located in or on soils with a maximum ultimate bearing value of less than 250 kPa shall be restrained in any horizontal direction by ties or other means to limit differential horizontal movement during an earthquake. The ties or other means shall be capable of carrying, in tension or compression, a force equal to 0.25(aS) times the larger footing or column load.

Accessed by SWINBURNE UNIVERSITY OF TECHNOLOGY on 15 Aug 2007

@Seismicisolation

@Seismicisolation

SECTION 6 STATIC ANALYSIS

6.1 GENERAL Static analysis, when used, shall conform to the criteria established in this Section.

6.2 HORIZONTAL FORCES

6.2.1 General Structures shall be designed to resist earthquake forces applied in any horizontal direction.

The horizontal design earthquake forces may be assumed to act non-concurrently in the direction of each principal axis of the structure except for the following:

(a) The structure components and footings that participate in resisting horizontal earthquake forces in both main axes of the structure.

(b) The structure is classified as irregular (see Item (a) or Item (e) of Clause 2.9.2).

For these two cases, the structure components and footings shall be designed for the additive effect of 100% of the horizontal earthquake forces for one direction and 30% in the perpendicular direction. The combination requiring the greater component strength shall be used for design.

NOTE: Walls that are not part of the earthquake resisting system for the direction being considered should be designed in accordance with the provisions specified in Section 5.

6.2.2 Earthquake base shear The total horizontal earthquake base shear force (V) in a given direction shall be determined from the following equation:

$$V = I\left(\frac{CS}{R_f}\right)G_g \qquad \text{. . . 6.2.2}$$

within the limits:

$$V \geq 0.01G_g$$

and

$$V \leq I\left(\frac{2.5a}{R_f}\right)G_g$$

where

I = importance factor (see Table 2.5)

C = earthquake design coefficient (see Clause 6.2.3)

S = site factor (see Clause 2.4)

R_f = structural response factor (see Clause 6.2.6)

G_g = gravity load (see Clause 6.2.5)

a = acceleration coefficient (see Table 2.3 or Figures 2.3(b) to 2.3(g)).

6.2.3 Earthquake design coefficient The earthquake design coefficient (C) shall be determined from the following equation:

$$C = \frac{1.25a}{T^{2/3}} \qquad \text{. . . 6.2.3}$$

where T is the structure period, in seconds (see Clause 6.2.4).

6.2.4 Structure period The structure period (T), in seconds, may be determined by a rigorous structural analysis. Alternatively, the fundamental period of a structure and,

Accessed by SWINBURNE UNIVERSITY OF TECHNOLOGY on 15 Aug 2007

@Seismicisolation

@Seismicisolation

where the structure has different properties in two orthogonal directions, the period for the orthogonal direction for structures of uniform vertical distribution of mass and stiffness may be approximated from the following equations:

Fundamental period: $$T = \frac{h_n}{46} \quad \text{. . . 6.2.4(1)}$$

Period for the orthogonal direction: $$T = \frac{h_n}{58} \quad \text{. . . 6.2.4(2)}$$

where

h_n = total height of the structure above the structural base in metres

The fundamental period shall be associated with the more flexible structure direction and the period for the orthogonal direction shall be associated with the most rigid structure direction.

The earthquake design coefficient (C) obtained from Equation 6.2.3 using the structure period (T) determined by a rigorous structural analysis shall be not less than 80% of the value obtained using T from Equations 6.2.4(1) and 6.2.4(2).

6.2.5 Gravity load The gravity load (G_g) shall be determined from the following equation:

$$G_g = G + \psi_c Q \quad \text{. . . 6.2.5}$$

where

G = dead load (see AS 1170.1)

ψ_c = live load combination factor used in assessing the design load for strength and stability limit states (see AS 1170.1)

Q = live load (see AS 1170.1)

6.2.6 Structural response factor The structural response factor (R_f) for the appropriate building and non-building structures, shall be as given in Tables 6.2.6(a) and 6.2.6(b) respectively.

6.3 VERTICAL DISTRIBUTION OF HORIZONTAL EARTHQUAKE FORCES

The horizontal earthquake force (F_x) applied at level x (see Figure 6.3), shall be determined from the following equation:

$$F_x = C_{vx} V \quad \text{. . . 6.3(1)}$$

where

C_{vx} = earthquake design coefficient for vertical distribution of horizontal earthquake forces

$$= \frac{G_{gx} h_x^k}{\sum_{i=1}^{n} G_{gi} h_i^k} \quad \text{. . . 6.3(2)}$$

G_{gx} = portion of gravity load (G_g) located or applied at level x

G_{gi} = portion of gravity load (G_g) located or applied at level i

Accessed by SWINBURNE UNIVERSITY OF TECHNOLOGY on 15 Aug 2007

@Seismicisolation

@Seismicisolation

h_x = height above the structural base of the structure to level x

h_i = height above the structural base of the structure to level i

n = number of levels in structure

k = an exponent dependent on the structure period (T), taken as—

(a) 1.0 when $T \leq 0.5$; or

(b) 2.0 when $T \geq 2.5$.

k may be linearly interpolated between 1.0 and 2.0 for $0.5 < T < 2.5$.

TABLE 6.2.6(a)

STRUCTURAL RESPONSE FACTOR (R_f) AND DEFLECTION AMPLIFICATION FACTOR (K_d) FOR BUILDING STRUCTURES

Structural system	Description	R_f	K_d
Bearing wall system	Light framed walls with shear panels	6.0	4.0
	Reinforced concrete shear walls	4.5	4.0
	Reinforced masonry shear walls	4.0	3.0
	Concentrically-braced frames	4.0	3.5
	Unreinforced masonry shear walls	1.5	1.25
Building frame system	Eccentrically-braced steel frames	7.0	4.0
	Light-framed walls with shear panels	7.0	4.5
	Concentrically-braced frames	5.0	4.5
	Reinforced concrete shear walls	6.0	5.0
	Reinforced masonry shear walls	5.0	4.0
	Unreinforced masonry shear walls	1.5	1.5
Moment resisting frame system	Special moment resisting frames of steel	8.0	5.5
	Special moment resisting frames of reinforced concrete	8.0	5.5
	Intermediate moment resisting frames of steel	6.5	4.5
	Intermediate moment resisting frames of reinforced concrete	6.0	3.5
	Ordinary moment resisting frames of steel	4.5	4.0
	Ordinary moment resisting frames of reinforced concrete	4.0	2.0
Dual system:			
(a) with a special moment resisting frame	Eccentrically-braced steel frames	8.0	4.0
	Concentrically-braced frames	6.5	5.0
	Reinforced concrete shear walls	8.0	6.5
	Reinforced masonry shear walls	6.5	5.5
(b) with an intermediate moment resisting frame of reinforced concrete or an ordinary moment resisting frame of steel	Concentrically-braced frames	5.5	4.5
	Reinforced concrete shear walls	6.0	5.0
	Reinforced masonry shear walls	5.5	4.5

Accessed by SWINBURNE UNIVERSITY OF TECHNOLOGY on 15 Aug 2007

@Seismicisolation

@Seismicisolation

TABLE 6.2.6(b)

STRUCTURAL RESPONSE FACTOR (R_f) FOR NON-BUILDING STRUCTURES

Type of structure	R_f
Tanks, vessels or pressurized spheres on braced or unbraced legs	2.1
Cast-in-place concrete silos and chimneys having walls continuous to the foundation	3.6
Distributed mass cantilever structures, such as stacks, chimneys, silos and skirt-supported vertical vessels	2.8
Trussed towers (freestanding or guyed), guyed stacks and chimneys	2.8
Inverted pendulum-type structures	2.1
Cooling towers	3.6
Bins and hoppers on braced or unbraced legs	2.8
Storage racking	3.6
Signs and billboards	3.6
Amusement structures and monuments	2.1
All other self-supporting structures not otherwise covered	2.8

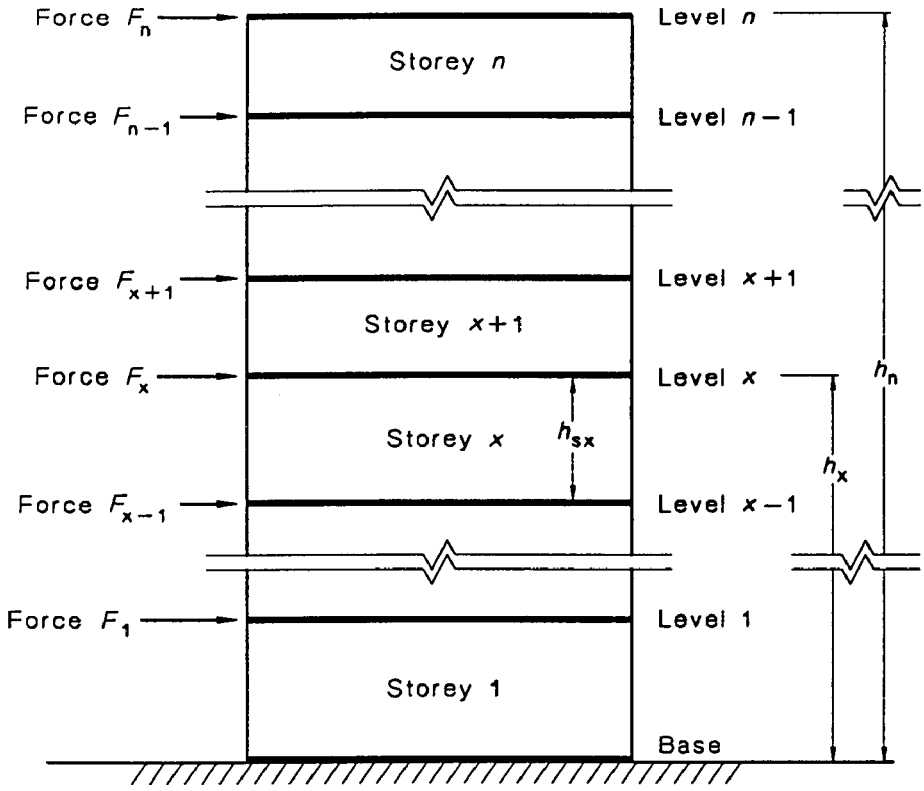

NOTE: The horizontal earthquake shear force (V_x) at storey x is the sum of all the horizontal forces at and above level x (F_x to F_n).

FIGURE 6.3 ILLUSTRATION OF FORCE, STOREY AND LEVEL

Accessed by SWINBURNE UNIVERSITY OF TECHNOLOGY on 15 Aug 2007

@Seismicisolation

@Seismicisolation

6.4 HORIZONTAL SHEAR DISTRIBUTION The horizontal earthquake shear force (V_x) at storey x (storey shear) shall be determined from the following equation:

$$V_x = \sum_{i=x}^{n} F_i \qquad \ldots 6.4$$

where

F_i = horizontal earthquake force at level i

n = number of levels in structure

The horizontal earthquake shear force (V_x) shall be distributed to the various vertical components of the earthquake resisting system (resisting elements) in the storey below level x with due consideration given to the relative stiffnesses of the vertical components and the diaphragm.

6.5 TORSIONAL EFFECTS

6.5.1 Introduction Provision shall be made for the changes in design action effects (shear forces) acting on resisting elements at storey x, resulting from horizontal torsion. For each resisting element, consideration shall be given to the more unfavourable change in design action effect resulting from either of the horizontal torsional moments specified in Clause 6.5.4.

6.5.2 Static eccentricity The static eccentricity (e_s) at storey x (see Figure 6.5.3.1) shall be taken as the distance between—

(a) the line of action of the horizontal earthquake force (F_x) acting through the centre of mass of level x; and

(b) the shear centre of storey x.

6.5.3 Design eccentricities The design eccentricities of storey x (e_{d1} and e_{d2}) (see Figure 6.5.3.1) shall be determined from the following equations:

$$e_{d1} = A_1 e_s + 0.05b \qquad \ldots 6.5.3(1)$$

$$e_{d2} = A_2 e_s - 0.05b \qquad \ldots 6.5.3(2)$$

where

e_{d1} = primary design eccentricity

e_{d2} = secondary design eccentricity

A_1 = dynamic eccentricity factor (see Figure 6.5.3.2)

= $[2.6 - 3.6(e_s/b)]$ or 1.4, whichever is the greater

A_2 = dynamic eccentricity factor (see Figure 6.5.3.2)

= 0.5

e_s = static eccentricity as defined in Clause 6.5.2 (see Figure 6.5.3.1)

b = maximum dimension of the structure at level x, measured perpendicular to the horizontal earthquake shear force direction at the level under consideration (see Figure 6.5.3.1)

The second term in both equations is the accidental eccentricity.

The effects of torsion shall be calculated in accordance with Clauses 6.5.4 and 6.5.5. For Type I regular structures with shear resisting elements at the structure perimeter and without static eccentricity, the design earthquake shear force on each resisting element may alternatively be increased by 30% to allow for torsion.

Accessed by SWINBURNE UNIVERSITY OF TECHNOLOGY on 15 Aug 2007

@Seismicisolation

@Seismicisolation

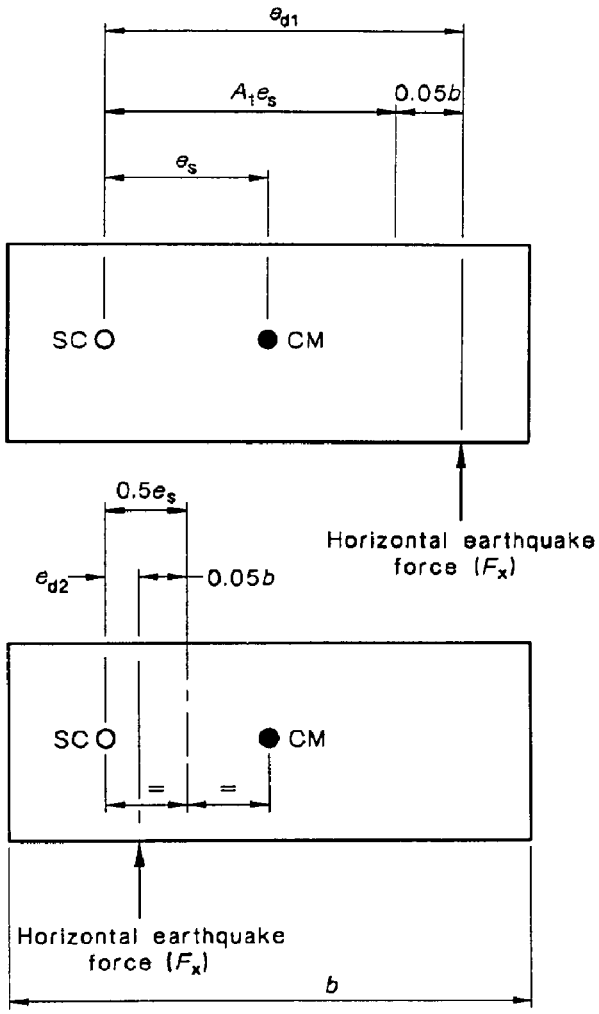

LEGEND:
SC = shear centr of level x
CM = centre of mass of level x
e_{d1} = primary design eccentricity
e_{d2} = secondary design eccentricity

FIGURE 6.5.3.1 GEOMETRIC ECCENTRICITIES

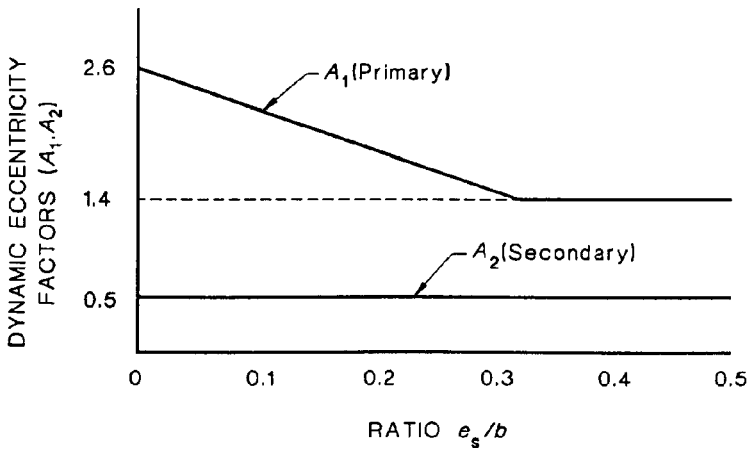

FIGURE 6.5.3.2 DYNAMIC ECCENTRICITY FACTORS

Accessed by SWINBURNE UNIVERSITY OF TECHNOLOGY on 15 Aug 2007

@Seismicisolation

@Seismicisolation

6.5.4 Horizontal torsional moments The corresponding horizontal torsional moments at storey *x* are given by the products of—

(a) the horizontal earthquake shear force (V_x) at storey *x* (see (Clause 6.4); and

(b) the distance from the shear centre of storey *x* to the line of action of the horizontal earthquake shear force (V_x). The line of action of F_i at each level shall be assumed to act at the design eccentricity (e_{d1}) or (e_{d2}) of that level.

6.5.5 Design action effects resulting from torsional moments Using the method of distributing the horizontal earthquake shear force (V_x) determined in accordance with Clause 6.4, design action effects shall be calculated for each of the torsional moments specified in Clause 6.5.4 separately.

For each resisting element, these design action effects shall be added to the design action effects resulting from the horizontal earthquake shear forces specified in Clause 6.4, to establish the more unfavourable combination for the resisting element under consideration.

6.6 STABILITY EFFECTS Structures shall be designed for an overturning moment (*M*) of the whole structure calculated from the following equation:

$$M = \alpha \sum_{i=1}^{n} F_i h_i \qquad \ldots 6.6$$

where

α = 0.75 for all structures except inverted pendulum structures

= 1.00 for inverted pendulum structures

n = number of levels in structure

F_i = horizontal earthquake force at level *i*

h_i = height above the base of the structure to level *i*

Inverted pendulum structures shall be designed for the bending moment calculated at the base and varying uniformly to a moment at the top equal to 50% of the calculated bending moment at the base.

6.7 DRIFT DETERMINATION AND *P*-DELTA EFFECTS

6.7.1 General Storey drifts, member forces and moment due to *P*-delta effects shall be determined in accordance with this Section.

6.7.2 Storey drift determination Storey drifts shall be assessed for the two major axes of a structure considering horizontal earthquake forces acting independently but not simultaneously in each direction. The design storey drift (Δ) shall be calculated as the difference of the deflections (δ_x) at the top and bottom of the storey under consideration. The deflections (δ_x) shall be determined from the following equation:

$$\delta_x = K_d \delta_{xe} \qquad \ldots 6.7.2$$

where

K_d = deflection amplification factor (see Table 6.2.6(a))

δ_{xe} = deflection determined by an elastic analysis using ultimate earthquake forces

For regular structures, the elastic analysis for storey drift determination shall be carried out using the horizontal earthquake forces (F_x) specified in Clause 6.3, applied to the structure through the centre of mass for each floor, e.g. the additional torsional effects specified in Clause 6.5 may be neglected.

Accessed by SWINBURNE UNIVERSITY OF TECHNOLOGY on 15 Aug 2007

@Seismicisolation

@Seismicisolation

For irregular structures, the elastic analysis for storey drift determination shall be carried out using the horizontal earthquake forces (F_x) specified in Clause 6.3, applied to the structure in accordance with Clause 6.5.

Where applicable, the design storey drift (Δ) shall be increased to allow for the *P*-delta effects.

6.7.3 *P*-delta effects *P*-delta effects on horizontal earthquake shear forces and moments, the resulting member forces and moments, and the storey drifts induced by these effects need not be considered when the stability coefficient (m) as determined from the following equation is equal to or less than 0.10:

$$m = \frac{P_x \Delta}{V_x h_{sx} K_d} \qquad \ldots 6.7.3$$

where

P_x = total vertical design load at storey x

Δ = design storey drift (see Clause 6.7.2)

V_x = horizontal earthquake shear force at storey x

h_{sx} = height of storey x (see Figure 6.3)

K_d = deflection amplification factor (see Table 6.2.6(a))

When m is greater than 0.10, the deflection amplification factor (K_d) related to *P*-delta effects shall be determined by rational analysis.

The design storey drift (Δ) determined in accordance with Clause 6.7.2 shall be multiplied by the factor ($0.9/(1 - m)$), which is greater than or equal to 1, to obtain the storey drift including *P*-delta effect. Alternatively, a second order analysis may be used to obtain the storey drift including *P*-delta effects.

The increase in horizontal earthquake shear forces and moments resulting from the increase in storey drift shall be added to the corresponding shear forces and moments determined without consideration of the *P*-delta effect.

6.8 VERTICAL COMPONENT OF GROUND MOTION The vertical earthquake ground motion shall be considered for structures of earthquake Design Categories D and E when its effects are significant. The vertical component of ground motion may be defined by scaling corresponding horizontal accelerations by a factor of 0.5.

Accessed by SWINBURNE UNIVERSITY OF TECHNOLOGY on 15 Aug 2007

@Seismicisolation

@Seismicisolation

APPENDIX A
STRUCTURE CLASSIFICATION
(Informative)

A1 STRUCTURE CLASSIFICATION Regulatory authorities may designate any structure to any classification type when special local conditions make this desirable. The following examples of classification types are given:

(a) *Examples of structure classification Type III*:

(i) Fire-fighting facilities.

(ii) Police facilities.

(iii) Ambulance stations.

(iv) Emergency vehicle garages.

(v) Medical facilities for surgery and emergency treatment.

(vi) Power stations.

(vii) Emergency centres.

(viii) Structures housing toxic or explosive substances in sufficient quantities to be dangerous to the public if released.

(b) *Examples of structure classification Type II*:

(i) Public assembly for 100 or more persons.

(ii) Open-air stands for 2000 or more persons.

(iii) Day-care centres for 50 or more persons.

(iv) Schools.

(v) Colleges and universities.

(vi) Retail stores with an area of more than 500 m^2 per floor or more than 10 m high from the ground to the roof.

(vii) Shopping centres with covered malls, 3000 m^2 or more gross area excluding parking.

(viii) Offices over four storeys high or more than 1000 m^2 per floor.

(ix) Hotels, motels and the like over four storeys high.

(x) Apartment houses over four storeys high.

(xi) Hospital facilities other than those of Type III.

(xii) Wholesale stores or warehouses over four storeys high.

(xiii) Factories over four storeys high.

(xiv) Heavy machinery plants over four storeys high.

(xv) Corrective institutions.

(c) *Examples of structure classification Type I*:

(i) Public assembly for fewer than 100 persons.

(ii) Open-air stands for fewer than 2000 persons.

(iii) Day-care centres for fewer than 50 persons.

Accessed by SWINBURNE UNIVERSITY OF TECHNOLOGY on 15 Aug 2007

@Seismicisolation

@Seismicisolation

(iv) Retail stores with an area of less than or equal to 500 m^2 per floor or less than or equal to 10 m high from the ground to the roof.

(v) Shopping centres with covered malls, up to 3000 m^2 gross area excluding parking.

(vi) Offices up to four storeys high or up to 1000 m^2 per floor.

(vii) Hotels, motels and the like up to four storeys high.

(viii) Apartment houses up to four storeys high.

(ix) Wholesale stores or warehouses up to four storeys high.

(x) Factories up to four storeys high.

(xi) Heavy machinery plants up to four storeys high.

Structures which have multiple uses should be assigned the classification of the highest type which occupies 15% or more of the total structure area.

Access to structures of classification Type III should be protected. Where access is through another structure, that structure should also conform to the requirement of classification Type III. Where access is within 3 m of side property lines, protection against potential falling hazards from adjacent properties should be provided.

A2 CONFIGURATION

A2.1 General The configuration of a structure can significantly affect its performance during a strong earthquake. Configuration can be divided into two aspects, plan configuration and vertical configuration. Past earthquakes have repeatedly shown that structures which have irregular configurations suffer greater damage than structures having regular configurations. This situation prevails even with good design and construction. These provisions are intended to encourage the designer to design structures having regular configurations.

A2.2 Plan configuration Examples of plan irregularities are shown in Figure A1 and specified as follows:

(a) A structure may have symmetrical geometric shape without re-entrant corners or wings but still be classified as irregular in plan because of the distribution of mass or vertical earthquake-resisting elements.

(b) A structure having a regular configuration can be square, rectangular, or circular. A square or rectangular structure with minor re-entrant corners would still be considered regular but large re-entrant corners creating a crucifix form would be classified as an irregular configuration. The response of the wings of this type of structures is generally different from the response of the structure as a whole, and this produces higher local forces than would be determined by application of the Standard without modification. Other plan configurations such as H-shapes that have a geometrical symmetry also would be classified as irregular because of the response of the wings.

(c) Significant differences in stiffness between portions of a diaphragm at a particular level are classified as irregularities since they may cause a change in the distribution of horizontal earthquake forces to the vertical components and create torsional forces not accounted for in the normal distribution considered for a regular structure.

(d) Where there are discontinuities in the horizontal force resistance path, the structure can no longer be considered regular. The most critical of the discontinuities to be considered is the out-of-plane offset of vertical elements of the horizontal earthquake force resisting elements. Such offsets impose vertical and horizontal load effects on horizontal elements that are, at the least, difficult to provide for adequately.

Accessed by SWINBURNE UNIVERSITY OF TECHNOLOGY on 15 Aug 2007

@Seismicisolation

@Seismicisolation

(e) Where vertical elements of the horizontal force resisting system are not parallel to, or symmetrical with respect to, major orthogonal axes, the static horizontal force procedures cannot be applied as given and, thus, the structure should be considered to be irregular.

There is a type of distribution of vertical force resisting components that, while not being classified as irregular, does not perform well in strong earthquakes. This arrangement is a core-type building with the vertical components of the horizontal earthquake resisting system concentrated near the centre of the structure. Better performance has been observed when the vertical components are distributed near the perimeter of the structure.

A2.3 Vertical configuration Vertical configuration irregularities affect the responses at the various levels and induce loads at these levels that are significantly different from the distribution assumed in the static analysis described in Section 6. Examples of vertical irregularities are shown in Figure A2 and specified as follows:

(a) A moment-resisting frame structure might be classified as having a vertical irregularity if one storey were much taller than the adjoining storeys and the resulting decrease in stiffness that would normally occur was not, or could not be, compensated for (see Figure A2(a)).

(b) A structure would be classified as irregular if the ratio of mass to stiffness in adjoining storeys differs significantly. This might occur when a heavy mass, such as a swimming pool, is placed at one level (see Figure A2(b)).

(c) Vertical irregularity is also created by unsymmetrical geometry with respect to the vertical axis of the structure (see Figure A2(c)). The structure also would be considered irregular if the smaller dimension were below the larger dimension, thereby creating an inverted pyramid effect.

(d) The structure may have a geometry that is symmetrical about the vertical axis and still be classified as irregular because of significant horizontal offsets in the vertical elements of the horizontal force resisting system at one or more levels.

(e) The problem of concentration of energy demand in the resisting elements in a storey as a result of abrupt changes in strength capacity between storeys has been noted in past earthquakes.

Accessed by SWINBURNE UNIVERSITY OF TECHNOLOGY on 15 Aug 2007

@Seismicisolation

@Seismicisolation

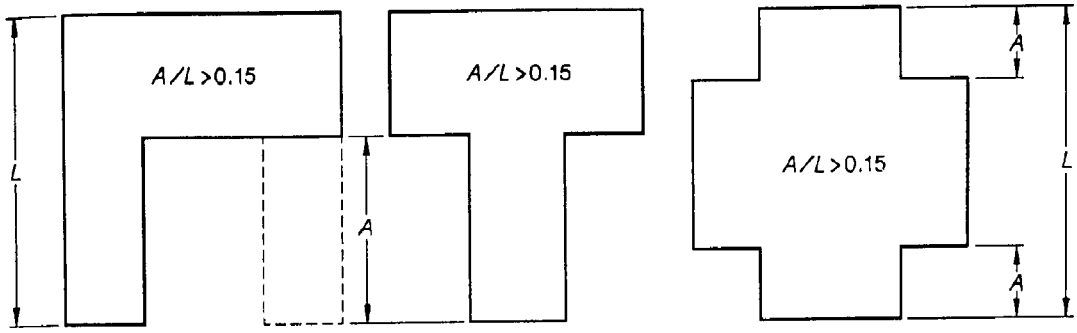

(a) Geometry

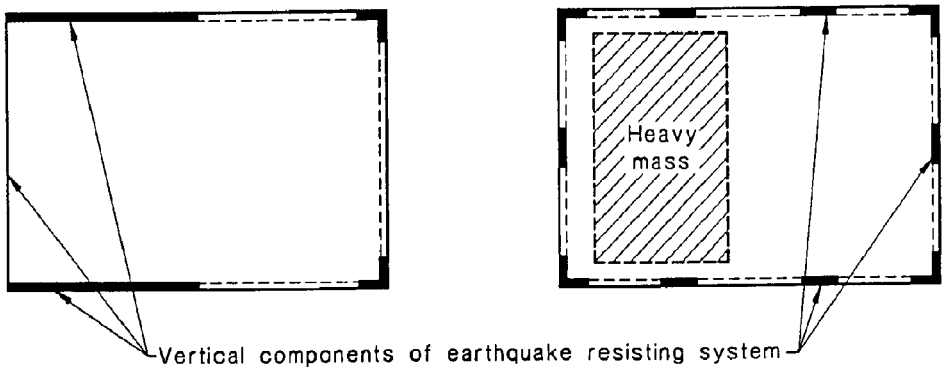

(b) Mass resistance eccentricity

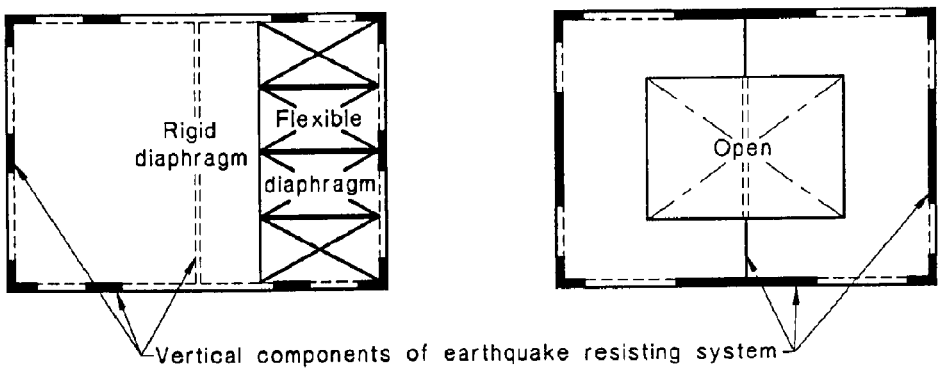

(c) Discontinuity in diaphragm stiffness

FIGURE A1 STRUCTURE PLAN IRREGULARITIES

Accessed by SWINBURNE UNIVERSITY OF TECHNOLOGY on 15 Aug 2007

@Seismicisolation

@Seismicisolation

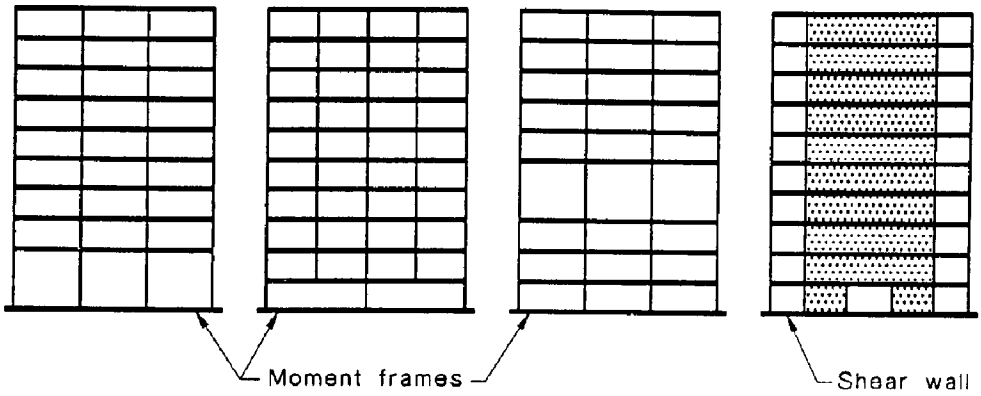

(a) Stiffness ratio

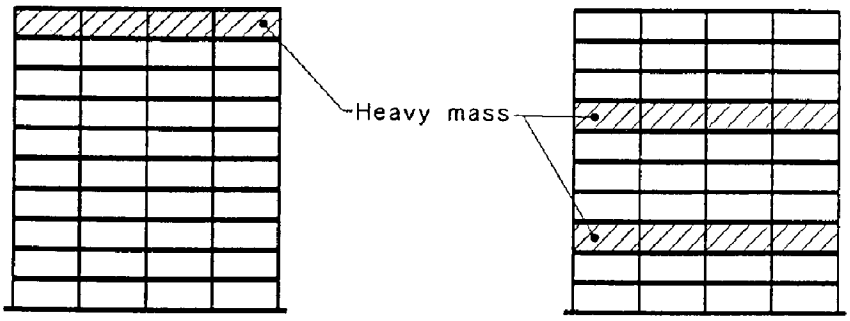

(b) Mass ratio

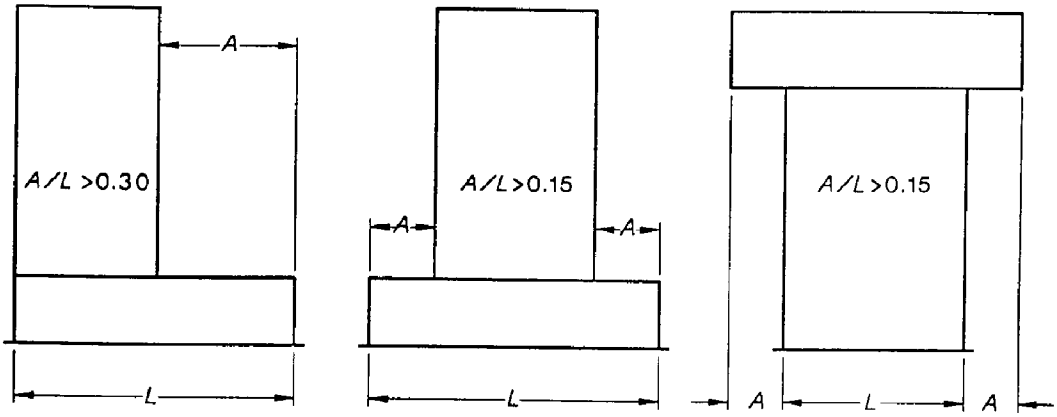

(c) Geometry

FIGURE A2 STRUCTURE VERTICAL IRREGULARITIES

Accessed by SWINBURNE UNIVERSITY OF TECHNOLOGY on 15 Aug 2007

@Seismicisolation

@Seismicisolation

APPENDIX B

STRUCTURAL SYSTEM

(Informative)

B1 DUCTILITY Structures in which members and their connections can sustain a number of load reversing post-yield deflection cycles whilst maintaining a substantial proportion of their initial load-carrying capacity are defined as ductile structures. Ductility or ductility ratio is often used as a measure of this attribute. The ductility of a member or structure is typically defined as the ratio of the deformation at failure to the deformation at yield.

Some forms of construction, such as moment resisting frames, can be expected to exhibit considerable ductility, while others are limited in their capacity for ductile behaviour. The structural response factors (R_f) given in Tables 6.2.6(a) and 6.2.6(b) reflect the levels of ductility assessed for each structural system.

Elements with no or limited ductility should be considered non-ductile. Unreinforced masonry is considered to be non-ductile. Examples of ductile and non-ductile structures are given in Paragraph C2.

NOTE: The R_f factor as given in Tables 6.2.6(a) and 6.2.6(b) is not a displacement ductility ratio, rather it defines the level of force reduction available for a given system compared with an elastic system.

B2 STRUCTURAL SYSTEMS To design for earthquake loads, a structure should be classified into one of four earthquake resisting systems: bearing wall system, building frame system, moment resisting frame system, and dual system.

For the moment resisting frame system, three levels of ductility of the moment resisting frames are recognized: ordinary, intermediate and special. The special ductility level is not expected to be necessary for most design in Australia but has been included if required in special circumstances. The design and detailing requirements for each level of ductility will be provided in the appropriate material Standards. The following is a broad outline of these requirements:

(a) For concrete structures: ordinary moment resisting frames (OMRFs) are those designed in accordance with AS 3600, excluding Appendix A of that Standard. Intermediate moment resisting frames (IMRFs) are those designed in accordance with AS 3600, including Appendix A of that Standard. Special moment resisting frames (SMRFs) are those designed similar to the earthquake requirements of ACI.318-92.

NOTE: Appendix A of AS 3600 is being revised to conform with this Standard.

(b) For steel structures: Ordinary moment resisting frames (OMRFs) are those designed in accordance with AS 4100, excluding Section 13 of that Standard. Intermediate moment resisting frames (IMRFs) are those designed in accordance with AS 4100 and satisfy all the requirements of Section 13 of that Standard. Special moment resisting frames (SMRFs) are those designed similar to the earthquake requirements of UBC 1991.

NOTE: Section 13 of AS 4100 is being revised to conform with this Standard.

(c) Other materials including masonry and timber.

NOTE: The other material Standards will be revised to conform with this Standard in regard to earthquake resistance.

Accessed by SWINBURNE UNIVERSITY OF TECHNOLOGY on 15 Aug 2007

@Seismicisolation

@Seismicisolation

APPENDIX C
DOMESTIC STRUCTURES
(Informative)

C1 GENERAL This Appendix gives further guidance on ways of improving horizontal earthquake resistance of domestic structures. In general, a system designed to resist horizontal wind loads for ductile structures such as timber or steel framed structures is adequate to resist horizontal earthquake loads. However, it should be noted that while the total resistance required for earthquake loads is the same for each of the two axes that are to be considered, the total resistance for wind loads is different for the two axes (except for square structures). Furthermore, the strength requirements for earthquake resistance is a function of the ductility of the system.

The following guidance is based on New Zealand Standard NZS 3604:1990 Code of Practice for Light Timber Frame Buildings not requiring specific design.

All ties should be designed for horizontal earthquake forces in either direction. Connection details for timber structures of earthquake Design Categories H1 and H2 should comply with AS 1684.

For domestic structures of earthquake Design Category H3, plan shapes which are relatively regular are preferred and open channel-shaped plans, use of picture windows, large sliding doors, etc should be avoided.

The Standard does not make recommendations for domestic structures which fall outside these guidelines.

C2 TYPE OF STRUCTURES

C2.1 Ductile structures The following structures are considered ductile based on the history of performance of such structures under earthquake loads:

(a) Reinforced and prestressed concrete structures.

(b) Steel frame structures including masonry veneer.

(c) Timber frame structures including masonry veneer.

(d) Reinforced masonry structures.

(e) Other systems that can be shown to be ductile.

C2.2 Non-ductile structures The following structures are considered non-ductile based on the history of performance of such structures under earthquake loads:

(a) Unreinforced masonry.

(b) Pise or mud brick.

(c) Other systems that can be shown to be non-ductile.

NOTE: Paragraphs C2.1 and C2.2 apply to domestic structures and general structures.

C3 DETAILING GUIDES

C3.1 Foundation and subfloor framing Subfloor braces of either diagonal or sheet form should be provided for discrete footings except for cantilevered pier footing with clearance less than 500 mm where the piers are encased and embedded in concrete for a minimum of 450 mm depth in general and 900 mm depth for corner piers.

Accessed by SWINBURNE UNIVERSITY OF TECHNOLOGY on 15 Aug 2007

@Seismicisolation

@Seismicisolation

The upper end of a diagonal subfloor brace should be attached to a brace pier, a bearer or a joist. The lower end of the brace should not be higher than 150 mm above the finished ground level.

C3.2 Wall framing Wall bracing elements may be placed on external and internal walls on bracing lines. They should be located as far as practicable at the corners of the external walls and evenly distributed throughout the structure.

C3.3 Roof bracing Roof plane diagonal brace should be provided for roofs with gable end.

C3.4 Tiled roofs Tiled roofs should have diagonal bracing fully tied to walls and gable ends so that the roof is fully braced. For freestanding carports and the like with tiled roofs, consideration should be given to restrain such roofs.

C3.5 Gable ends and parapets Gable ends and parapets of earthquake Design Categories H1, H2 and H3 should be tied to the roof.

Accessed by SWINBURNE UNIVERSITY OF TECHNOLOGY on 15 Aug 2007

@Seismicisolation

@Seismicisolation

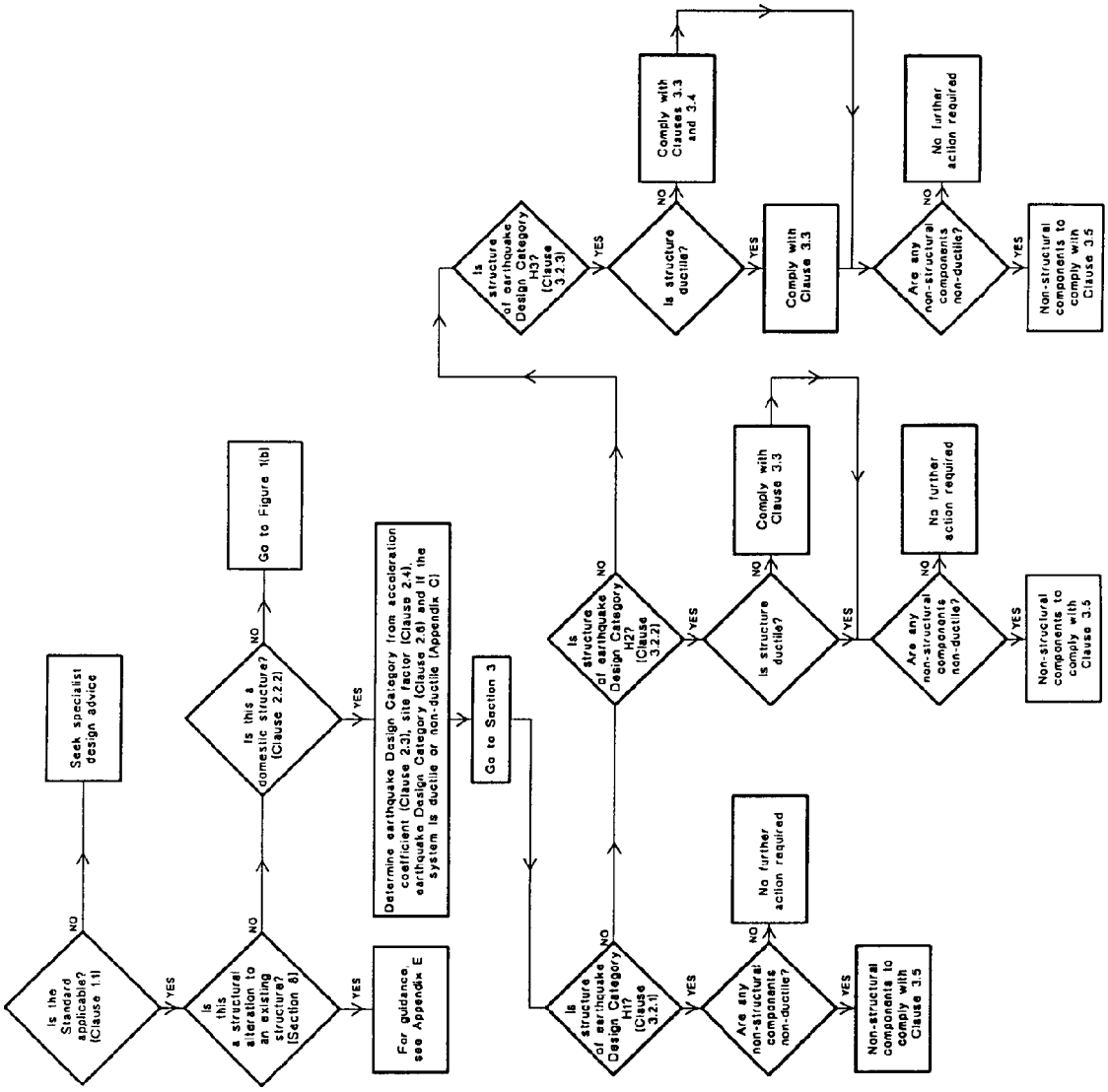

(a) Domestic structures

FIGURE 1 (in part) FLOWCHART FOR DETERMINATION OF EARTHQUAKE LOADS

Accessed by SWINBURNE UNIVERSITY OF TECHNOLOGY on 15 Aug 2007

@Seismicisolation

@Seismicisolation

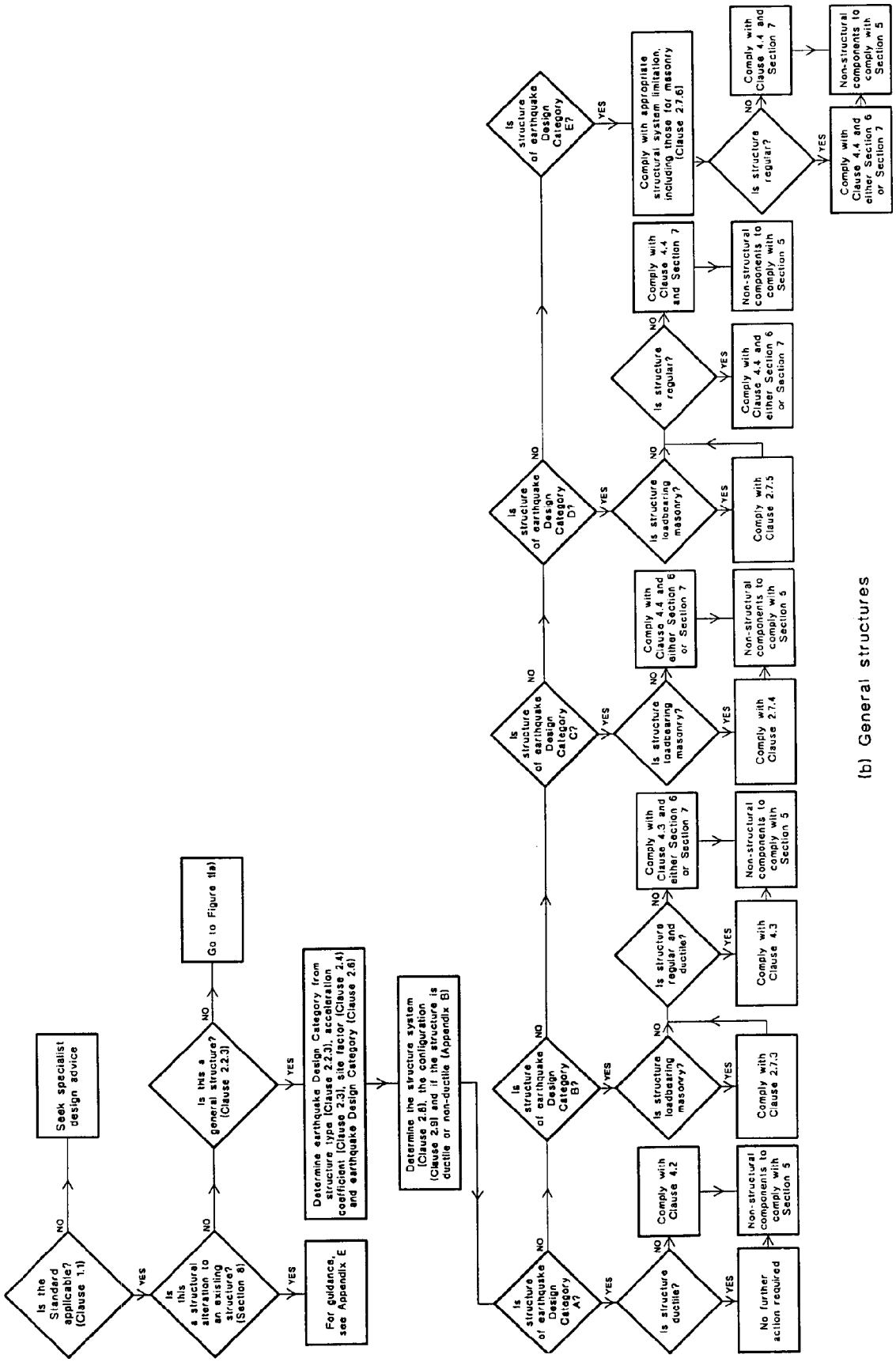

(b) General structures

FIGURE 1 (in part) FLOWCHART FOR DETERMINATION OF EARTHQUAKE LOADS

Accessed by SWINBURNE UNIVERSITY OF TECHNOLOGY on 15 Aug 2007

@Seismicisolation

@Seismicisolation

NOTES

Accessed by SWINBURNE UNIVERSITY OF TECHNOLOGY on 15 Aug 2007

@Seismicisolation

@Seismicisolation

CHAPTER 6

RESIDENTIAL SLABS AND FOOTINGS—CONSTRUCTION

This Chapter consists of edited extracts from AS 2870—1996, *Residential slabs and footings—Construction*, and incorporates Amendments No. 1 (January 1997) and No. 2 (June 1999).

Accessed by SWINBURNE UNIVERSITY OF TECHNOLOGY on 15 Aug 2007

@Seismicisolation

@Seismicisolation

STANDARDS AUSTRALIA

Australian Standard
Residential slabs and footings—Construction

SECTION 1 SCOPE AND GENERAL

1.1 SCOPE

This Standard sets out the requirements for the classification of a site and the design and construction of a footing system for a single dwelling house, townhouse or the like which may be detached or separated by a party wall or common wall, but not situated vertically above or below another dwelling. Such houses include buildings classified as Class 1 and 10a under the Building Code of Australia.

The Standard may also apply to other forms of construction including some light industrial, commercial and institutional buildings if they are similar to houses in size, loading and superstructure flexibility. The footing systems for which designs are given include slab-on-ground, stiffened rafts, waffle rafts, strip footings, pad footings and piled footings. This Standard gives no advice on detailing of the connection of superstructures to the footing systems for wind loads or earthquake loads.

This Standard shall not be interpreted so as to prevent the use of materials or methods of design not referred to herein. Specifically, this Standard shall not be used to prevent the use of locally proven designs, or alternative designs in accordance with engineering principles.

NOTE: This Standard does not include design details for Class P sites. Some advisory material is included in the commentary.

1.2 APPLICATION

The Standard requires that all sites shall be classified in accordance with Section 2 and that footing system designs shall be prepared either by prescribing a standard design in accordance with Section 3, or by the engineering principles described in Section 4. In either case, all construction shall comply with Sections 5 and 6.

Residential footing system design and construction shall comply with AS 3600 except that, where in conflict, this Standard shall take precedence.

NOTE: The functions of the various parties involved in the design and construction of residential slabs and footings are normally as described in Appendix A.

1.3 PERFORMANCE OF FOOTING SYSTEMS

1.3.1 General

The footing systems complying with this Standard are intended to achieve acceptable probabilities of serviceability and safety of the building during its design life. Building supported by footing systems designed and constructed in accordance with this Standard on a normal site (see Clause 1.3.2) which is—

(a) not subject to abnormal moisture conditions; and

(b) maintained such that the original site classification remains valid and abnormal moisture conditions do not develop (see Note 1);

Accessed by SWINBURNE UNIVERSITY OF TECHNOLOGY on 15 Aug 2007

@Seismicisolation

@Seismicisolation

are expected to experience usually no damage, a low incidence of damage category 1 and an occasional incidence of damage category 2 (see Note 2). Damage categories are defined in Appendix C.

NOTES:

1 Appendix B provides information and guidance on the maintenance of foundations site conditions.

2 Class A sites (as defined in Section 2) are not reactive to moisture and may have a lesser risk of damage.

1.3.2 Normal sites

Normal sites are those which are classified as one of the Classes A, S, M, H and E in accordance with Section 2 of this Standard and where foundation moisture variations are caused by seasonal and climatic changes, effect of the building and subdivision and normal garden conditions, without abnormal moisture conditions (see Clause 1.3.3). Compliance with the recommendations in CSIRO 10-91 is deemed to provide normal garden conditions.

1.3.3 Abnormal moisture conditions

Where the following factors are present, footings will have a higher probability of damage than that given in Clause 1.3.1:

(a) Recent removal of an existing building or structure likely to have significantly modified the soil moisture conditions under the proposed plan of the building.

(b) Unusual moisture conditions caused by drains, channels, ponds, dams or tanks which are to be maintained or removed from the site.

(c) Recent removal of large trees prior to construction.

(d) Growth of trees too close to a footing.

(e) Excessive or irregular watering of gardens adjacent to the house.

(f) Lack of maintenance of site drainage.

(g) Failure to repair plumbing leaks.

1.4 DESIGN CONDITIONS

1.4.1 General

For the purpose of this Clause, the design conditions below apply for normal sites. Where abnormal sites or abnormal environmental conditions apply, the design of the footing system shall be by engineering principles which may be beyond the scope of those set out in Section 4.

1.4.2 Load effects

Design for serviceability and safety against yield of concrete or bearing failure shall be based on design actions due to—

(a) dead load + 0.5 live load; and

(b) foundation movement.

Design for uplift shall be based on action effects due to 0.8 dead load + wind load.

Settlements and bearing capacity of the foundation shall be determined from dead load + 0.5 live load. Settlement may be determined directly using the above load. Bearing and uplift failures shall be determined using a strength reduction factor of 0.3.

Foundation movement shall be assessed as the level which has less than 5% chance of being exceeded in the life of the structure, which may be taken as 50 years. Design soil suction profiles shall be based on this concept and the values given in Section 2 shall be deemed to comply with this requirement.

Accessed by SWINBURNE UNIVERSITY OF TECHNOLOGY on 15 Aug 2007

@Seismicisolation

@Seismicisolation

Soil parameters shall be taken as mean values of available results for each soil horizon or particular soil.

1.4.3 Other design considerations

The design of footing systems shall consider:

(a) Effective drainage of the site.

(b) Past satisfactory performance of similar footings on similar sites.

(c) Control, but not prevention of, shrinkage cracking.

(d) Control, but not prevention of, cracking due to footing movement.

(e) Stiffness and ductility of the footing system.

(f) Strength of the wall system.

(g) Tolerance of the wall system to movement.

(h) Allowable bearing pressure.

1.5 DEEMED-TO-COMPLY STANDARD DESIGNS

The standard designs given in Section 3 shall be deemed-to-comply with the performance expectations described in Clause 1.3.

1.6 REFERENCED DOCUMENTS

The following documents are referred to in this Standard:

AS

1289	Methods of testing soils for engineering purposes
1289.7.1.1	Determination of the shrinkage index of a soil—Shrink swell index
1289.7.1.2	Determination of the shrinkage index of a soil—Loaded shrinkage index
1289.7.1.3	Determination of the shrinkage index of a soil—Core shrinkage index (subsidiary method)
1289.6.3.3	Method: 6.3.3 Soil strength and consolidation tests—Determination of the penetration resistance of a soil—Perth sand penetrometer test
1302	Steel reinforcing bars for concrete
1304	Welded wire reinforcing fabric for concrete
1379	Specification and supply of concrete
1650	Hot-dipped galvanized coatings on ferrous articles
1684	National Timber Framing Code
1720	Timber structures (known as the SAA Timber Structures Code)
2159	Rules for the design and installation of piling (known as the SAA Piling Code)
2870 Supp1	Residential slabs and footings—Construction—Commentary (Supplement to AS 2870—1996)
3500	National Plumbing and Drainage Code
3500.2	Part 2: Sanitary plumbing and sanitary drainage
3600	Concrete structures
3660	Termite management
3660.1	Part 1: New building work

AS

3700	Masonry in buildings (known as the SAA Masonry Code)

Accessed by SWINBURNE UNIVERSITY OF TECHNOLOGY on 15 Aug 2007

@Seismicisolation

@Seismicisolation

3798 Guidelines on earthworks for commercial and residential developments

3958 Ceramic tiles
3958.1 Part 1: Guide to the installation of ceramic tiles

AS/NZS
4347 Damp-proof courses and flashings—Methods of test
4347.6 Method 6: Determining impact resistance (falling dart impact test)
4347.9 Part 9: Determining thickness

4671 Steel reinforcing materials

Australian Building Code Board
BCA Building Code of Australia

Cement and Concrete Association of Australia
TN 61 Articulated walling

CSIRO, Division of Building, Construction and Engineering
10-91 A Guide to Home Owners on Foundation Maintenance and Footing Performance

1.7 DEFINITIONS

For the purpose of this Standard, the definitions below apply.

1.7.1 Allowable bearing pressure

The maximum bearing pressure that can be sustained by the foundation from the proposed footing system under service loads over the design range of soil moisture conditions. Allowable bearing pressure shall take into consideration both the site conditions and the ability of the building system to accommodate settlement.

1.7.2 Articulated full masonry

Full masonry construction in which special provision is made for movement by articulation.

1.7.3 Articulated masonry veneer

Masonry veneer construction in which the provisions for articulated masonry have been applied to the masonry veneer.

1.7.4 Braced stump

A stump that resists horizontal loads from bracing that connects to the stump at less than or equal to 150 mm from ground level. The stump may also support vertical loads.

1.7.5 Bracing stump

A stump that, in addition to vertical loads, resists horizontal loads applied more than 150 mm above ground level.

1.7.6 Bored pier

In-situ concrete cylindrical load support element.

1.7.7 Bulk pier

In-situ concrete load support element excavated by backhoe or similar.

1.7.8 Characteristic surface movement (y_s)

The movement of the surface of a reactive site caused by moisture changes from characteristic dry to characteristic wet condition in the absence of a building and without consideration of load effects.

Accessed by SWINBURNE UNIVERSITY OF TECHNOLOGY on 15 Aug 2007

@Seismicisolation

@Seismicisolation

1.7.9 Clad frame

Timber or metal frame construction with the exterior wall clad with timber or sheet material not sensitive to minor movements. Includes substructure masonry walls up to 1.5 m high.

1.7.10 Clay

Fine-grained soil with plastic properties when wet. Includes gravelly, sandy or silty clays.

1.7.11 Collapsing soil

Weakly-cemented soil subject to large settlements under load as a result of degradation by water on the cementing action.

1.7.12 Concrete wall panel

A precast (including tilt-up) or in situ concrete wall designed to act as a unit and separated from adjacent walls by a joint.

1.7.13 Controlled fill

Material that has been placed and compacted in layers by compaction equipment within a defined moisture range to a defined density requirement in accordance with Clause 6.4.2(a) and AS 3798.

1.7.14 Edge beam

Beam at the edge of a slab-on-ground or stiffened raft.

1.7.15 Edge footing

Footing at the edge of a footing slab.

1.7.16 Extension

Additional construction to and abutting an existing building.

1.7.17 Fill depth

For a slab, depth of fill is measured from the underside of the slab panel to the natural surface level. For a strip or pad footing system, the depth of fill is measured from the finished ground level to the natural surface level.

1.7.18 Finished ground level

Ground level adjacent to the footing system at the completion of construction and landscaping.

1.7.19 Fitment

Tie, ligature or stirrup reinforcement.

1.7.20 Footing

Construction which transfers the load from the building to the foundation.

1.7.21 Footing slab

Concrete floor supported on the ground with a separately poured edge strip footing.

1.7.22 Footing system

General term used to refer to slabs, footings, piers and pile systems that transfer load from the structure to the foundation.

1.7.23 Foundation

Ground which supports the building.

1.7.24 Framed double-leaf masonry

Construction with masonry double-leaf external wall and framed internal walls.

Accessed by SWINBURNE UNIVERSITY OF TECHNOLOGY on 15 Aug 2007

@Seismicisolation

@Seismicisolation

1.7.25 Full masonry

Construction with masonry double-leaf external walls and masonry single-leaf internal walls without full articulation.

1.7.26 Gilgai

Soil surface feature associated with reactive clay sites, characterized by regularly spaced and sized depressions on virgin land. Gilgais are formed by extreme reactive soil movements. Soil profiles may vary markedly across sites with gilgais.

1.7.27 House

Detached single dwelling constructed as Class 1, or Class 10a as defined in the Building Code of Australia, with limitations as stated in this Standard.

1.7.28 Infill slab

Slab cast on the ground between walls.

1.7.29 Landslip

Foundation condition on a sloping site where downhill foundation movement or failure is a design consideration.

1.7.30 Load-bearing wall

Any wall imposing on the footing a service load greater than 10 kN/m.

1.7.31 Masonry

Stone, brick, terracotta block, concrete block, or other similar building unit single or in combination assembled together unit by unit.

1.7.32 Masonry veneer

House construction consisting of a load-bearing frame clad with an outer leaf of masonry.

1.7.33 Maximum differential footing movement

The maximum movement of a footing relative to a line joining the ends of the footing system (or, in the case of double curvature, joining the points of contraflexure).

1.7.34 Mine subsidence

Settlement, curvature, slope and lateral strain produced at the surface as a result of underground mining.

1.7.35 Mixed construction

Building consisting of more than one form of construction, particularly in double-storey houses.

1.7.36 Natural site

Site which has not been subjected to cut or fill.

1.7.37 One-storey

Construction with wall height, excluding any gable, not exceeding 4.2 m and including only one trafficable floor.

1.7.38 Outbuilding

Detached building such as a carport, private garage, shed or the like.

1.7.39 Pad footing

Concrete footing used to support a pier or stump.

Accessed by SWINBURNE UNIVERSITY OF TECHNOLOGY on 15 Aug 2007

@Seismicisolation

@Seismicisolation

1.7.40 Pier-and-beam

Footing system incorporating bored piers, bulk piers or piles and reinforced concrete beams supporting a building where the floor is not integral with the beams.

1.7.41 Pier-and-slab

Footing system incorporating bored piers, bulk piers or piles supporting a suspended slab and including a slab partly supported on piers and partly supported on ground.

1.7.42 Pile

A structural member that is driven, screwed, jacked, vibrated, drilled or otherwise installed in the ground so as to transmit loads to the soil or rock.

1.7.43 Qualified engineer

A professional engineer with academic qualifications in geotechnical or structural engineering who also has extensive experience in the design of footing systems for houses or similar structures.

1.7.44 Reactive site

Site consisting of a clay soil which swells on wetting and shrinks on drying by an amount that can damage buildings on light strip footings or unstiffened slabs. Includes sites classified as S, M, H or E in accordance with Clause 2.1.

1.7.45 Reinforcement

Steel bars, wire or mesh. (See Clauses 1.9, 5.3.2, 5.3.7 and 5.4.2).

1.7.46 Reinforced single-leaf masonry

Outer wall constructed of concrete blocks with some vertically reinforced cores at not greater than 2.0 m centres lapped with steel starter bars set in concrete beams or footings and a bond beam.

1.7.47 Rock

Strong material including shaley material and strongly cemented sand or gravel that does not soften in water or collapse under the combination of loading and wetting. Material that cannot readily be excavated by a backhoe may be taken to be rock.

1.7.48 Rolled fill

Fill compacted by rolling with an excavator as defined in Clause 6.4.2.

1.7.49 Sand

Granular soil that may contain a small proportion of fines including silt or clay. The amount of fines may be assessed as small by a visual inspection or if the amount that passes a 75 μm sieve is 15% or less. Material with a higher proportion of fines shall be treated as silt or clay.

1.7.50 Shall

Indicates that a statement is mandatory.

1.7.51 Should

Indicates a recommendation.

1.7.52 Silt

Fine-grained soil that is non-cohesive and non-plastic when wet and can include some sand and clay.

Accessed by SWINBURNE UNIVERSITY OF TECHNOLOGY on 15 Aug 2007

@Seismicisolation

@Seismicisolation

1.7.53 Single-leaf masonry

Outer walls constructed with a single thickness of masonry units.

1.7.54 Slab

General term used to refer to slab-on-ground, stiffened rafts, footing slabs, stiffened footing slabs and waffle rafts.

1.7.55 Slab-on-ground

Concrete floor supported on the ground and incorporating integral edge beams.

1.7.56 Slab panel

Part of a slab between beams.

1.7.57 Soft site

Site consisting of soils for which the allowable bearing pressure is less than that required by the proposed footing system.

1.7.58 Stiffened raft

Concrete slab on ground stiffened by integral edge beams and a grid of internal beams.

1.7.59 Strip footing

Footing of rectangular section.

1.7.60 Stump

Element supported on a footing used for the support of a frame construction.

1.7.61 Two-storey

Construction with wall height, excluding any gable, not exceeding 8.0 m and including two trafficable floors.

1.7.62 Veneer

Construction of either masonry veneer or articulated masonry veneer.

1.7.63 Waffle raft

A stiffened raft with closely spaced ribs constructed on the ground and with slab panels suspended between ribs.

1.8 NOTATION

The symbols used in this Standard are as follows:

B_w	=	width of stem of edge, or internal beam
D	=	overall depth of a footing or beam
D_f	=	depth of strip footing from finished ground surface level
D_s	=	depth of pad footing from finished ground surface level (see Figure 3.6)
d	=	differential movement
e	=	edge distance (see Section 4)
H_s	=	depth of design suction change (Table 2.4)
h	=	maximum height of masonry wall retaining structure as shown in Figure 6.3
I_{ps}	=	shrinkage index or instability index without lateral restraint or loading of soil
I_{pt}	=	effective instability index including allowance for lateral restraint and vertical load

Accessed by SWINBURNE UNIVERSITY OF TECHNOLOGY on 15 Aug 2007

@Seismicisolation

@Seismicisolation

K	=	soil stiffness for soil-structure models
L	=	footing or slab length in the design direction
L_s	=	minimum distance from internal stump or pier to perimeter stump, pier or wall (see Figure 3.6)
M_{cr}	=	cracking moment capacity
M_u	=	ultimate bending moment capacity
M^*	=	design moment
t	=	thickness of slab or pad footing
W_f	=	shape factor for edge heave
Y_m	=	differential mound movement
y_s	=	characteristic surface movement
α	=	coefficient relating Ipt to Ips
Δ	=	differential footing movement (Clause 4.4)
Δu	=	change in suction
ϕ	=	strength reduction factor

1.9 REINFORCEMENT DESIGNATION

1.9.1 Trench mesh

For the purposes of this Standard, trench mesh is designated as x-L8TM, x-L11TM or x-L12TM, where x is the number of main longitudinal bars required of the appropriate trench mesh L8TM, L11TM or L12TM. Trench mesh shall comply with AS/NZS 4671.

1.9.2 Square mesh

SL62, SL72, SL82, SL92 or SL102 shall comply with AS/NZS 4671. SL53 and SL63 refer to square mesh similar to stock mesh specified in AS/NZS 4761, but with 5 mm bars and 6 mm bar at 300 mm centres respectively, and with the bars complying with the requirements for grade 500L in accordance with AS/NZS 4671.

1.9.3 Reinforcing bars

Reinforcing bars shall comply with AS/NZS 4671 Grade 500N, and are specified as x-N12, x-N16, or x-N20, where x is the number of bars.

1.9.4 High strength steel

Where fabric of higher strength than 450 MPa or bars of higher strength than 400 MPa are to be substituted for the specified reinforcement in the standard designs in Section 3, a proportional reduction in reinforcement area is permitted, provided that the substitute steel has a uniform elongation of at least 1.5% and that test certificates are available to substantiate this value. This reduction in reinforcement area is not permitted where reinforcement is less than 6 mm diameter. Use of reinforcing steel with yield strength greater than 500 MPa is not covered by this Standard.

1.10 INFORMATION ON DRAWINGS

The site classification, selected footing systems and any special sitework and site drainage shall be documented for reactive sites.

NOTE: The footing specification relies on specific site drainage performance.

Accessed by SWINBURNE UNIVERSITY OF TECHNOLOGY on 15 Aug 2007

@Seismicisolation

@Seismicisolation

SECTION 2 SITE CLASSIFICATION

2.1 GENERAL

2.1.1 Classification

Site classification is performed to allow the selection of standard footing designs presented in Section 3 or for the design of footing systems by engineering principles as described in Section 4.

Natural sites shall be classified into one of the classes given below in accordance with Clauses 2.2, 2.3 and 2.4 for both the expected extent of soil movement and the depth to which this movement extends. In the classification account shall be given to the possibility of a Class P site caused by conditions described in Clause 1.3.3(a), (b) or (c). For the effects of fill on classification see Clause 2.4.6.

NOTE: Site classification may require consideration of factors beyond the boundaries of the subject site.

2.1.2 Definitions

Site classes shall be designated for the expected level of site movement shown in Table 2.1.

TABLE 2.1

GENERAL DEFINITIONS OF SITE CLASSES

Class	Foundation
A	Most sand and rock sites with little or no ground movement from moisture changes
S	Slightly reactive clay sites* with only slight ground movement from moisture changes
M	Moderately reactive clay or silt sites, which can experience moderate ground movement from moisture changes
H	Highly reactive clay sites, which can experience high ground movement from moisture changes
E	Extremely reactive sites, which can experience extreme ground movement from moisture changes
A to P	Filled sites (See Clause 2.4.6)
P	Sites which include soft soils, such as soft clay or silt or loose sands; landslip; mine subsidence; collapsing soils; soils subject to erosion; reactive sites subject to abnormal moisture conditions or sites which cannot be classified otherwise

* For examples of clay sites classified as Class S, refer to Appendix D.

For Classes M, H and E further division based on the depth of the expected movement is required. For deep-seated movements, characteristic of dry climates and corresponding to a design depth of suction change, Hs, equal to or greater than 3 m, the classification shall be M-D, H-D or E-D as appropriate.

NOTE: For example, H-D represents a highly reactive site with deep moisture changes and H represents a highly reactive site with shallow moisture changes.

2.2 METHODS FOR SITE CLASSIFICATION

2.2.1 General

For sites that do not qualify as Class P sites, site classification shall include one or more of the following methods:

Accessed by SWINBURNE UNIVERSITY OF TECHNOLOGY on 15 Aug 2007

@Seismicisolation

@Seismicisolation

(a) Identification of the soil profile and either—

(i) established data on the performance of houses on the soil profile; or

(ii) interpretation of the current performance of existing buildings on the soil profile.

(b) Estimation of the characteristic surface movement (y_s).

2.2.2 Identification of the soil profile

Identification of the soil profile and a classification from established data on the performance of houses on the soil profile are as follows:

(a) The typical soil profile data given in Appendix D shall be used. Where no data are provided in Appendix D, local knowledge where available shall be applied.

NOTE: The soil type and site conditions should be inspected at footing excavation stage by the classifier to confirm the soil profile.

(b) Identification of the soil profile and interpretation of the current performance of existing buildings.

Identification of the soil profile and interpretation of the performance of existing residential footing systems within the region which are not less than 10 years old and are founded on a similar soil profile shall be assessed in accordance with Table 2.2.

NOTE: The soil type and site conditions should be inspected at footing excavation stage by the classifier to confirm the soil profile.

TABLE 2.2

SIMPLE CLASSIFICATION BY INTERPRETATION OF FOOTING PERFORMANCE
(Damage categories are given in Appendix C)

Wall construction	Performance of walls of existing buildings on lightly stiffened strip footings or slabs on ground	Primary classification of site
Clad frame	Buildings with differential movements, d (lowest to highest points on perimeter of building)	
	d ≤15 mm	S
	15 < d ≤30 mm	M
	30 < d ≤50 mm	H
	d >50 mm	E
Masonry (veneer or full)	Damage Category 0 to Category 1	S to M
	Damage often Category 1 but rarely Category 2	M to H
	Damage often Category 1 and 2, but rarely Category 3	H
	Damage often Category 3 or more severe and area usually well known for damage to houses and structures	E

NOTES:

1 Where performance of existing buildings indicates Class H, H-D, E, or E-D, a further investigation is suggested for buildings other than small extensions, garages or out-buildings.

2 Timber subfloor structures in clad-frame buildings may have settled due to biodegradation of the timber structure and not only ground movement.

3 Lightly stiffened footings can be taken to be footings as detailed in this Standard for Class A and S sites.

Accessed by SWINBURNE UNIVERSITY OF TECHNOLOGY on 15 Aug 2007

@Seismicisolation

@Seismicisolation

2.2.3 Estimation of the characteristic surface movement

Estimation of the characteristic surface movements (y_s) shall be used to prescribe site class by applying the limits in Table 2.3.

TABLE 2.3

CLASSIFICATION BY CHARACTERISTIC SURFACE MOVEMENT

Surface movement	Primary classification of site
0 mm < y_s ≤20 mm	S
20 mm < y_s ≤40 mm	M
40 mm < y_s ≤70 mm	H
y_s >70 mm	E

The value of y_s shall be determined using soil shrinkage indices (I_{ps}) appropriate to the soil profile of the site and suction change profiles which represent the design moisture changes (see Note 1).

Soil shrinkage indices shall be derived using one or more of the following methods:

(a) Laboratory tests for soil reactivity (AS 1289.7.1.1, AS 1289.7.1.2, AS 1289.7.1.3).

(b) Correlations between shrinkage index (I_{ps}) and other clay index tests for the soil type.

(c) Visual-tactile identification of the soil by an engineer or engineering geologist having appropriate expertise and local experience.

NOTES:

1 The general principles of calculating y_s are given in AS 2870 Supp1 (Commentary, Clause C2.2.3).

2 The estimation of surface movement shall be based on sufficient soil data to adequately describe the soil profile. Estimations based on a single test result to describe a full soil profile may be misleading.

3 As a guide to designers, the values of design suction changes are given in Table 2.4 for those locations where data are available. The designer may extrapolate to other areas if due consideration is given to the climate and soil fabric. Alternatively, published values of H_s based on consideration of regional Thornthwaite moisture indices, using the general principles in Appendix D and based on at least 20 years of climate data, may be used. Where a watertable is encountered within the depth H_s from the surface, the suction change shall be modified in accordance with Figure 2.1. Shallow bedrock shall be treated as a non-reactive soil layer, having no effect on the design suction change as shown in Figure 2.1. Where the soil profile indicates deep and open shrinkage cracking, the depth (H_s) given in Table 2.4 shall be increased to not less than the depth of cracking.

Accessed by SWINBURNE UNIVERSITY OF TECHNOLOGY on 15 Aug 2007

@Seismicisolation

@Seismicisolation

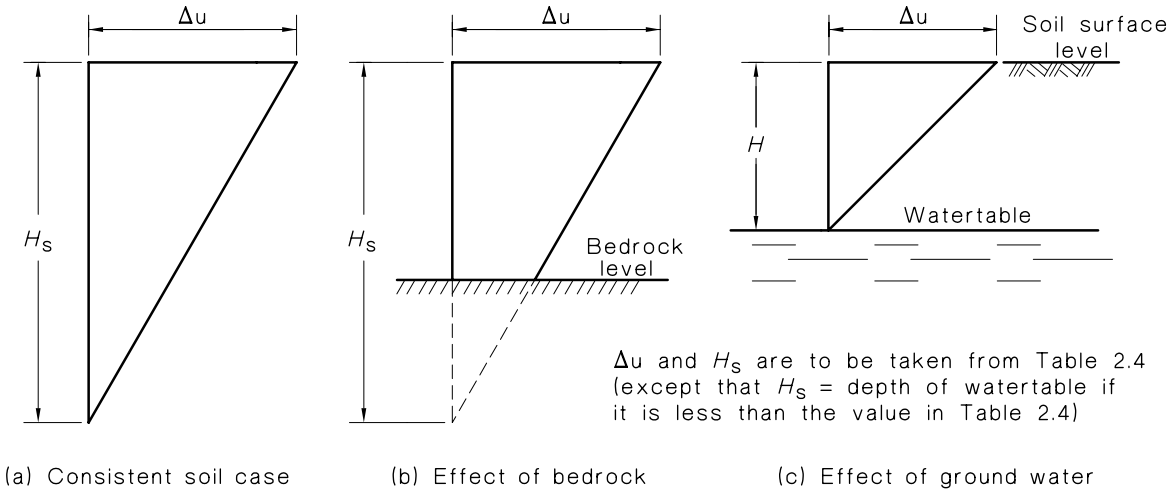

FIGURE 2.1 EFFECT OF BEDROCK OF WATERTABLE ON DESIGN SUCTION CHANGE PROFILES

TABLE 2.4

RECOMMENDED SOIL SUCTION CHANGE PROFILES FOR CERTAIN LOCATIONS

Location	Change in suction at the soil surface (Δu) pF	Depth of design suction change (H_s) m
Adelaide	1.2	4.0
Albury/Wodonga	1.2	3.0
Brisbane/Ipswich	1.2	1.5–2.3 (See Note)
Hobart	1.5	2.0
Hunter Valley	1.5	2.0
Launceston	1.2	2.0
Melbourne	1.2	1.5 to 2.3 (See Note)
Newcastle/Gosford	1.5	1.5
Perth	1.2	3.0
Sydney	1.5	1.5
Toowoomba	1.2	1.8 to 2.3 (See Note)

NOTE: The variation in H_s depends largely on climatic variation.

2.3 SITE INVESTIGATION REQUIREMENTS

2.3.1 General

Where a site investigation is required for the purpose stated in Clause 2.3.2, the requirements in Clauses 2.3.3 to 2.3.5 shall be met.

2.3.2 Purpose

The purpose of site investigation is to provide sufficient information to enable a site classification to be made, and to include information on the presence and depth of fill material, natural soil profile, and soil reactivity where required.

Accessed by SWINBURNE UNIVERSITY OF TECHNOLOGY on 15 Aug 2007

@Seismicisolation

@Seismicisolation

2.3.3 Depth of investigation

The soil profile shall be examined to a minimum depth equal to 0.75 times the depth of the suction change, H_s, as given in Table 2.4, but not less than 1.5 m, unless rock is encountered or in the opinion of the classifier, further drilling is unnecessary for the purpose of identifying the soil profile in accordance with Clause 2.2.1(a).

2.3.4 Minimum number of exploration positions

For house sites, either of the following shall apply:

(a) A minimum of one borehole or pit per house site (see Note 1).

(b) A minimum of three boreholes per site in areas with deep-seated movements ($H_s > 3.0$), and areas where the soil profile is known to be highly variable (see Notes 1 and 2).

NOTES:

1 The total number of boreholes across a housing subdivision may be reduced if soil profiling indicates uniform soil conditions which are predictable from soil maps. The presence of gilgais in an area is evidence of highly variable soil profiles within a site.

2 For sites for extensions and outbuildings, essentially rectangular in plan, with walls articulated at the junction with any other building and not longer than 9 m in either direction, only one borehole is required if the original site classification for the house has proved satisfactory.

2.3.5 Assessment of allowable bearing pressure

Class A, S, M, H and E sites shall have adequate allowable bearing pressure. Adequate allowable bearing pressure is as follows:

(a) The allowable bearing pressure at foundation level shall be not less than 100 kPa for strip and pad footings, and under the edge footing of footing slabs used without tie bars between the edge footing and slab.

(b) The allowable bearing pressure at foundation level shall be not less than 50 kPa under all beams and slab panels and support thickenings for slab construction.

Determination of allowable bearing pressure shall consider the weakest state of the foundation under normal site conditions; local knowledge shall be used.

NOTE: Inadequate allowable bearing pressure is not common except for some sites with loose sand, collapsing soils or swampy deep silt deposits.

2.4 ADDITIONAL CONSIDERATIONS FOR SITE CLASSIFICATION

2.4.1 General

Site classes shall be determined according to the provisions of Clauses 2.4.2 to 2.4.6. Filled sites shall be classified as Class P except where the conditions of Clauses 2.4.6(c) and 6.4.2 allow another classification.

2.4.2 Sites consisting predominantly of sand or rock

Sites consisting predominantly of sand or rock, as defined in Clause 1.7, shall be classified as Class A.

NOTE: Loose sands may not have adequate bearing capacity for strip or pad footings. See Clause 2.4.4.

2.4.3 Natural sand sites underlain by clay

Where clay occurs at a greater depth than 0.75 H_s the effect of the clay on the classification can be disregarded. Refer to Clause 2.4.5.

Accessed by SWINBURNE UNIVERSITY OF TECHNOLOGY on 15 Aug 2007

@Seismicisolation

@Seismicisolation

2.4.4 Class P sites

Sites shall be classified as Class P if—

(a) the allowable bearing pressure is less than specified in Clause 2.3.5;

(b) excessive foundation settlement may occur due to the effects of fill loading on the foundation;

(c) the sites contain uncontrolled fill or certain controlled clay fill as stipulated in Clause 2.4.6;

(d) the sites are subject to mine subsidence, landslip, collapse activity or coastal erosion; or

(e) the sites are subject to moisture changes due to extreme site conditions significantly more severe than the reasonable site conditions described in Clause 1.3.2.

2.4.5 Effect of site works on classification

The classification of a site shall take into account the effect of site works when these are known at the time of classification. Where the effect of site works is not taken into account, the classification shall be reconsidered if—

(a) the depth of cut on an S, M, H or E site exceeds 0.5 m; or

(b) the depth of fill exceeds the limits provided in Clause 2.4.6.

2.4.6 Effect of fill on classification

The following shall be observed:

(a) *Controlled fill*

(i) *Shallow fill* The classification of a site with controlled fill up to 0.8 m deep for sand and 0.4 m deep for material other than sand shall be the same as the natural site, prior to filling.

(ii) *Deep fill* The classification of a site with controlled sand fill deeper than 0.8 m shall not require a more severe Class than the natural site classification, but may be used to justify by engineering principles a less severe reactive site classification. The effect of the fill on the settlement of the underlying soil shall be taken into account. The classification of a site with controlled fill of material other than sand and deeper than 0.4 m shall be Class P (refer Item (c) regarding reclassification).

(b) *Uncontrolled fill*

(i) *Shallow fill* The classification of a site with uncontrolled fill up to 0.8 m deep for sand and 0.4 m deep for material other than sand shall be Class P, unless all footings (i.e. edge beams, internal beams and load support thickenings) are founded on natural soil through the filling.

(ii) *Deep fill* The classification of a site with uncontrolled fill deeper than 0.8 m for sand and 0.4 m for material other than sand shall be Class P.

(c) *Reclassification of filled sites* A site filled with controlled fill and classified as Class P can be given an alternative site classification if assessed in accordance with the following engineering principles:

(i) The assessment shall consider the movement of the fill and the underlying soil from the as-constructed condition to the long-term equilibrium moisture conditions. Allowance shall be made for construction variations of moisture conditions. Alternatively, the movement may be estimated by reference to established knowledge of the behaviour of similar fills in a similar area.

Accessed by SWINBURNE UNIVERSITY OF TECHNOLOGY on 15 Aug 2007

@Seismicisolation

@Seismicisolation

(ii) The depth of the cracked zone should be taken as zero for reactive clay in controlled fill placed less than 5 years prior to building construction.

NOTES:

1 Long term equilibrium moisture conditions may be taken as—

(a) marginally wet of optimum moisture condition (standard compactive effort) in the eastern coastal area; or

(b) marginally dry of optimum moisture condition (standard compactive effort) in arid areas.

2 Equilibrium moisture conditions may be estimated by reference to similar clays that have stabilized near the centre of large sealed surfaces.

3 The reclassification should not be less severe than the natural site classification, unless the controlled fill consists of non-reactive material and is deeper than one metre or $0.5H_s$, whichever is greater.

Accessed by SWINBURNE UNIVERSITY OF TECHNOLOGY on 15 Aug 2007

@Seismicisolation

@Seismicisolation

SECTION 3 STANDARD DESIGNS

3.1 SELECTION OF FOOTING SYSTEMS

3.1.1 Selection procedure

Standard designs for footing systems shall be selected from Figures 3.1 to 3.6. The design in Figure 3.2 makes provision in Western Australia for a reduction in slab thickness to 85 mm. Where this provision is utilized, the slab shall be specified by an appropriate qualified engineer. These designs shall not apply to—

(a) Class E or P sites;

(b) buildings longer than 30 m;

(c) slabs containing permanent joints, e.g. contraction or control joints;

(d) two-storey construction with a suspended concrete floor at the first floor level except in accordance with Clause 3.5;

(e) two-storey construction in excess of the height limitations. See Clause 1.7.61;

(f) support of columns or fireplaces not complying with Clause 3.6;

(g) buildings including wing walls or masonry arches unless they are detailed for movement in accordance with TN 61;

(h) construction of three or more storeys; or

(i) single-leaf earth or stone masonry walls greater than 3 m height.

(j) On class M, M-D, H or H-D sites, the construction of a footing system for a single building comprising any combination of two or more designs taken from Figures 3.1, 3.4, 3.5 or 3.6.

NOTE: The use of proprietary suspended floor systems based on composite design with precast beams and insitu concrete is not precluded by this Clause.

3.1.2 Design for single-leaf masonry, mixed construction and earth masonry

The proportions for the selected footing system for single-leaf masonry, mixed construction and earth masonry shall comply with Clause 3.1.1 using the equivalent construction set out below in Table 3.1.

TABLE 3.1
EQUIVALENT CONSTRUCTIONS

Actual construction		Equivalent construction
External walls	**Internal walls**	
Single leaf masonry		
Reinforced single-leaf masonry	Articulated masonry on Class A and S sites, or framed	Articulated masonry veneer
Reinforced single-leaf masonry	Articulated masonry or reinforced single leaf masonry	Masonry veneer
Reinforced single-leaf masonry	Masonry	Articulated full masonry
Articulated single-leaf masonry	Articulated masonry	Articulated full masonry
Articulated single-leaf masonry	Masonry	Articulated full masonry
Other single-leaf masonry	Framed	Articulated full masonry
Other single-leaf masonry	Masonry	Full masonry
Mixed construction		
Full masonry	Framed	Articulated full masonry
Articulated full masonry	Framed	Masonry veneer
Earth masonry:		
Infill panels of earth masonry	Framed earth masonry	Articulated masonry veneer
Load bearing earth masonry	Load bearing earth masonry	Articulated full masonry

NOTE: Articulated internal walls shall comply with TN 61.

@Seismicisolation

Accessed by SWINBURNE UNIVERSITY OF TECHNOLOGY on 15 Aug 2007

@Seismicisolation

3.1.3 Construction with framed party walls

For construction involving framed party walls for the purpose of this Section, the building shall be taken as equivalent to masonry veneer construction or design shall be based on engineering principles.

3.1.4 Design for masonry feature walls

Masonry feature walls can be used in basically masonry veneer construction on footings appropriate for masonry veneer provided that the wall is straight, one-storey, less than 4 m in length between joints and is supported by either—

(a) an internal beam in a stiffened raft; or

(b) an internal strip footing continuous from external strip footing to external strip footing.

3.1.5 Design for outbuildings and extensions to dwellings

The footing system design given in this Section shall be used for outbuildings and extensions and—

(a) outbuildings of clad framed construction can use footing systems appropriate for one class of reactivity less severe than for a house; and

(b) walls of masonry extensions, or masonry veneer extensions, shall be articulated at the junction with the existing building.

Footings of similar proportions and details to those used in an existing house on the same allotment can be used, provided that the performance of the existing house has been satisfactory and there are no unusual moisture conditions.

3.1.6 Design for rock outcrops

Where a footing or edge beam encounters a single local rock outcrop or floater over a length less than 1 m, the depth of the footing or edge beam can be reduced by up to one-third provided that the amount of top and bottom reinforcement is doubled and extended 500 mm past the section with reduced depth.

Alternatively, the footing can be stepped or raised provided the structural stiffness is preserved.

3.1.7 Design for partial rock foundation

Where part of the footing is on rock and part is on soil, provision for movement at the change between the two types of foundation shall be made by articulation of the superstructure or strengthening of the footing system.

On M and H sites where part of the footing is on rock and part is on soil, the design shall be in accordance with engineering principles.

3.1.8 Design for complete rock foundation

Where the edge beam or footing is to be founded entirely on rock, the footing or beam can be replaced by a levelling pad of concrete or mortar.

3.2 PIER-AND-BEAM, PIER-AND-SLAB OR PILE SYSTEMS

Generally a pier-and-beam, pier-and-slab or piled footing system shall be designed in accordance with engineering principles.

The waffle raft for a one-storey house for clad frame or masonry veneer on M, M-D, H or H-D sites may be supported on piers as follows without structural design of the waffle raft:

(a) Piers shall be located on the intersection of every third rib.

(b) An additional N12 bar at the top shall be provided in the ribs intersecting the piers, but no shear fitments are required.

Accessed by SWINBURNE UNIVERSITY OF TECHNOLOGY on 15 Aug 2007

@Seismicisolation

@Seismicisolation

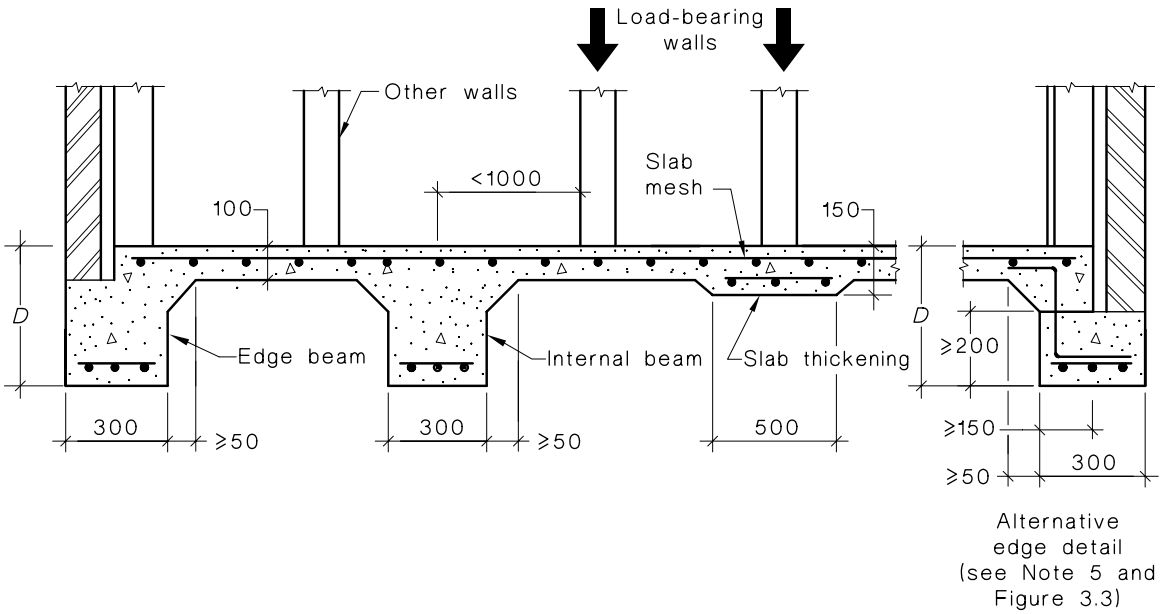

DIMENSIONS IN MILLIMETRES

Site class	Type of construction	Edge and internal beams (see Note 1)			Slab mesh		
		Depth (D) mm	Bottom reinforcement	Maximum spacing centre to centre (m)	Slab length <18m	Slab length ≥18 & <25m	Slab length ≥25m& <30m
Class A	Clad frame	300	3-L8TM	—	SL72	SL82	SL92
	Articulated masonry	300	3-L8TM	—	SL72	SL82	SL92
	Masonry veneer	300	3-L8TM	—	SL72	SL82	SL92
	Articulated full masonry	400	3-L8TM	—	SL72	SL82	SL92
	Full masonry	400	3-L8TM	—	SL72	SL82	SL92
Class S	Clad frame	300	3-L8TM	—	SL72	SL82	SL92
	Articulated masonry	300	3-L8TM	—	SL72	SL82	SL92
	Masonry veneer	300	3-L11TM	—	SL72	SL82	SL92
	Articulated full masonry	400	3-L11TM	—	SL72	SL82	SL92
	Full masonry	450	3-L11TM	5.0(Note 2)	SL82	SL82	SL92
Class M	Clad frame	300	3-L11TM	6.0(Note 2)	SL72	SL82	SL92
	Articulated masonry	400	3-L11TM	6.0(Note 2)	SL72	SL82	SL92
	Masonry veneer	400	3-L11TM	5.0(Note 2)	SL72	SL82	SL92
	Articulated full masonry	500	3-L12TM	4.0	SL82	SL82	SL92
	Full masonry	800	3-N16	4.0	SL92	SL92	SL92
Class M-D	Clad frame	400	3-L11TM	5.0(Note 2)	SL72	SL82	SL92
	Articulated masonry	400	3-L11TM	4.0	SL72	SL82	SL92
	Masonry veneer	500	3-L12TM	4.0	SL82	SL82	SL92
	Articulated full masonry	625	3-L12TM	4.0	SL92	SL92	SL92
	Full masonry	—	—	—	—	—	—
Class H	Clad frame	400	3-L11TM	5.0(Note 2)	SL72	SL82	SL92
	Articulated masonry	500	3-L12TM	4.0	SL82	SL82	SL92
	Masonry veneer	700	3-N16	4.0	SL92	SL92	SL92
	Articulated full masonry	1 000	4-N16	4.0	SL102	SL102	SL102
	Full masonry	—	—	—	—	—	—
Class H-D	Clad frame	500	3-L11TM	4.0	SL82	SL82	SL92
	Articulated masonry	600	3-L12TM	4.0	SL92	SL92	SL92
	Masonry veneer	—	—	—	—	—	—
	Articulated full masonry (See Note 6)	1 200	4-N16	4.0	SL102	SL102	SL102
	Full masonry	—	—	—	—	—	—

FIGURE 3.1 (in part) STIFFENED RAFT SITE CLASSES A, S, M, M-D, H, H-D

@Seismicisolation

Accessed by SWINBURNE UNIVERSITY OF TECHNOLOGY on 15 Aug 2007

@Seismicisolation

NOTES:

1 Internal and external edge beams shall form an integral structural grid in accordance with Clauses 5.3.8 and 5.3.9.

2 A 10% increase in these spacings is permitted where the spacing in the other direction is 20% less than specified.

Where the number of beams in a particular direction satisfies the requirements of the maximum spacing give above, the spacing between individual beams can be varied, provided that the spacing between any two beams does not exceed the spacing give in the above Figure by 25%.

These allowances for increased beam spacings do not override the maximum spacings between edge beams and first internal beams are required by Clause 5.3.9.

3 Where external beams are wider than 300 mm, an extra bottom bar or equivalent of the same bar size is required for each 100 mm additional width.

4 For a particular class of site, if a beam depth greater than that given for the type of construction is selected, the bottom reinforcement specified for the deeper beam is to be used.

5 Except on site Classes M-D or H-D, a horizontal construction joint is permitted in the edge and internal beams, provided the concrete-to-concrete joint is at least 150 mm wide and traversed by R10 or N10 fitments at 600 mm centres or equivalent (see alternative edge beam detail).

6 Construction details are given in Clauses 6.4 and 6.6.

7 If shrinkage crack control is a design consideration, then refer to Clause 5.3.7.

8 For Class M, M-D, H and H-D sites, alternative reinforcement, as follows, may be selected in lieu of the slab fabric specified in the Table above:

Alternative slab mesh	**Specified slab mesh**		
	SL102	**SL92**	**SL82**
	Additional reinforcement at top of beams		
SL92	3-L11TM	—	—
SL82	3-N16	3-L11TM	—
SL72	4-N16	4-L12TM	2-L12TM

9 Where a reinforced single leaf masonry wall is constructed directly above, and structurally connected to a concrete edge beam, the beam may be reduced to 300 mm wide by 300 mm deep and reinforced with 3-L8TM reinforcement.

Internal beam details and spacings shall comply with this Figure (3.1). At a re-entrant corner where an external beam continues as an internal beam, the internal beam details shall be continued for a length of 1 m into the external beam.

FIGURE 3.1 (in part) STIFFENED RAFT SITE CLASSES A, S, M, M-D, H, H-D

Accessed by SWINBURNE UNIVERSITY OF TECHNOLOGY on 15 Aug 2007

@Seismicisolation

@Seismicisolation

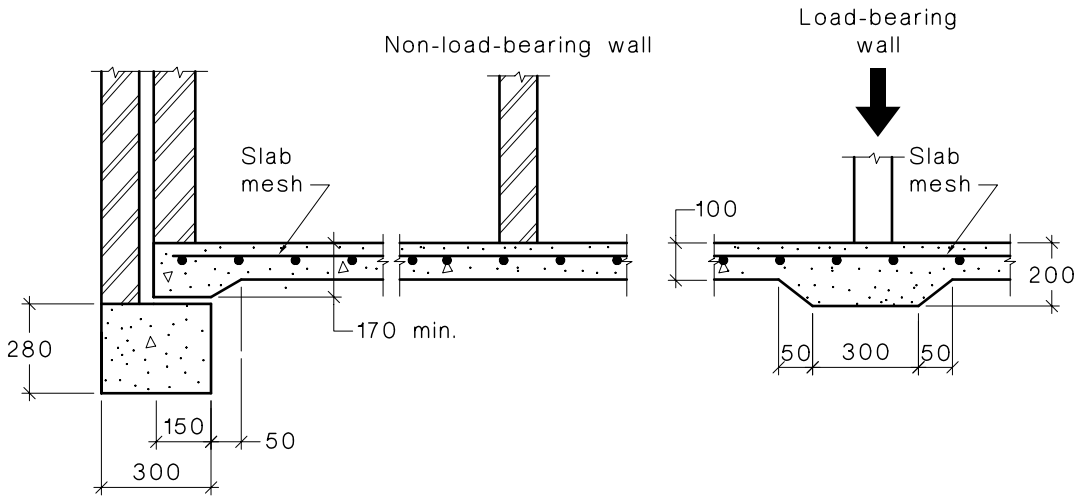

NOTES:

1 Use SL63 when maximum slab length ≤12 000.
Use SL62 when maximum slab length >12 000 and <18 000.
Use SL72 when maximum slab length ≥18 000 and <25 000.
Use SL82 when maximum slab length ≥25 000 and <30 000.

2 In Western Australia, for slabs under 25 m in length, where specified by an appropriately qualified engineer, the slab thickness may be reduced to 85 mm with reinforcement as specified below. All other details remain the same.
Use SL53 when maximum slab length ≤12 000.
Use SL63 when maximum slab length >12 000 and <18 000.
Use SL62 when maximum slab length ≥18 000 and <25 000.

3 Dune sands may require compaction.

DIMENSIONS IN MILLIMETRES

FIGURE 3.2 FOOTING SLAB FOR CLASS A SITES FOR CLAD FRAME, ARTICULATED MASONRY VENEER, MASONRY VENEER, ARTICULATED FULL MASONRY OR FULL MASONRY

Accessed by SWINBURNE UNIVERSITY OF TECHNOLOGY on 15 Aug 2007

@Seismicisolation

@Seismicisolation

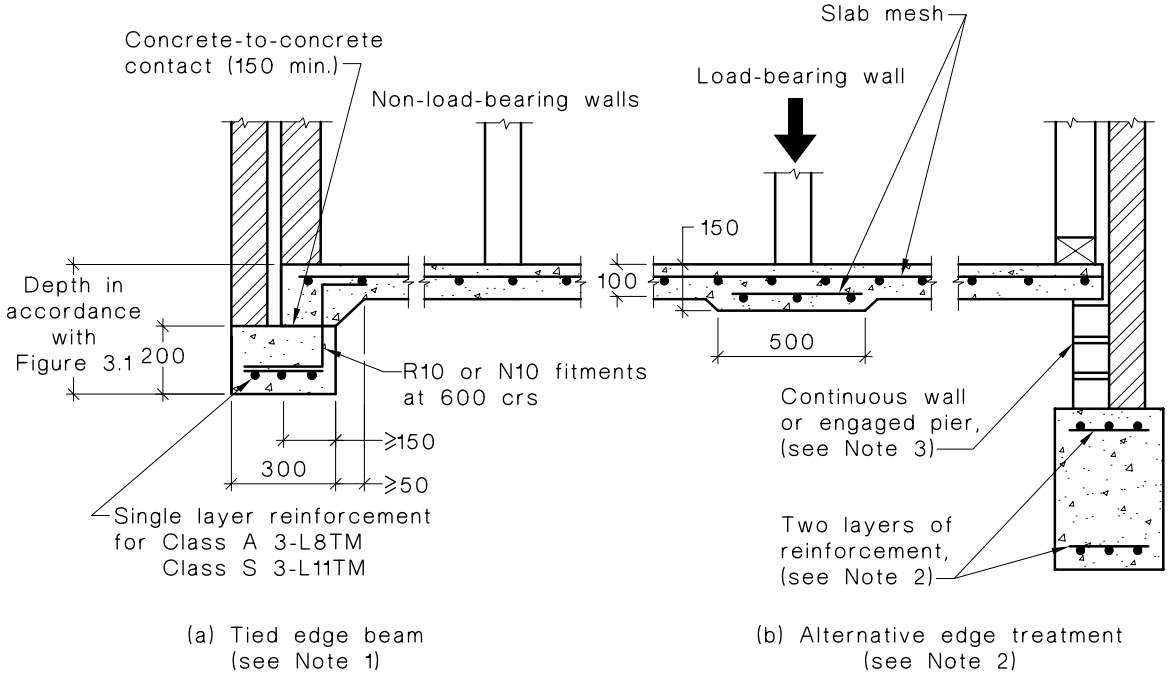

NOTES:

1 The proportions for the tied edge beam apply only where there is a structural connection by concrete-to-concrete contact tied with fitments.

2 Where the edge beam supports but is not tied to the slab such as is shown for the alternative edge beam treatment above, the footing proportions and footing reinforcement shall comply with Figure 3.6.

3 Construction details are given in Section 6. In particular, for the alternative edge treatment, the retaining wall details are given in Clause 6.4.5.

4 Fitments shall be adequately anchored above and below the joint.

DIMENSIONS IN MILLIMETRES

FIGURE 3.3 FOOTING SLAB FOR CLASS A AND FOR CLASS S SITES FOR CLAD FRAME, ARTICULATED MASONRY VENEER, MASONRY VENEER, ARTICULATED FULL MASONRY OR FULL MASONRY

Accessed by SWINBURNE UNIVERSITY OF TECHNOLOGY on 15 Aug 2007

@Seismicisolation

@Seismicisolation

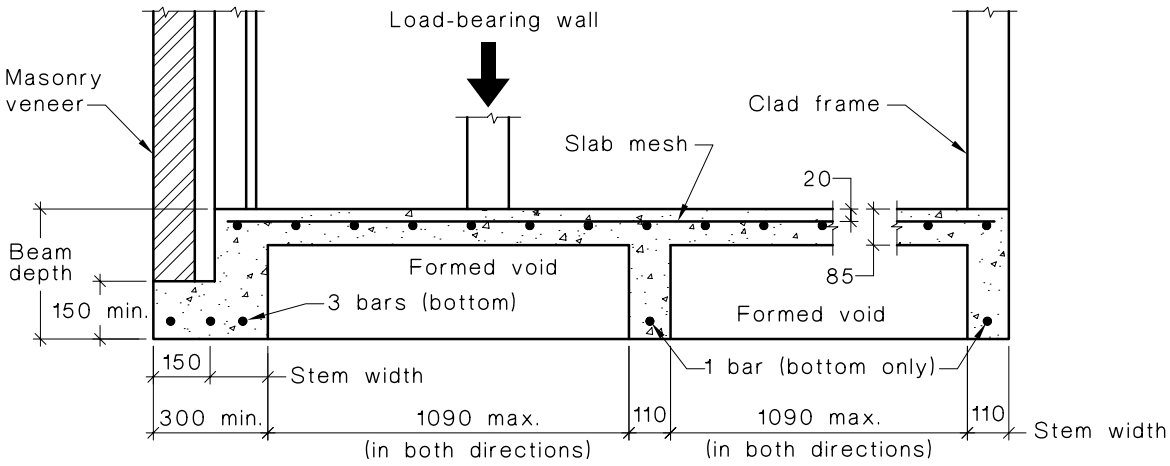

(a) Typical edge rebate

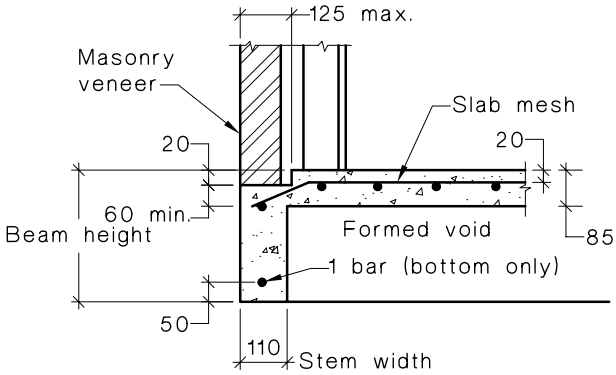

(b) Alternative edge rebate

Site class and type of construction	Beam depth mm	Bar size beam reinforcement	Slab mesh	
			Slab length <25m	Slab length ≥25m & <30m
Class A				
Clad frame, articulated masonry veneer and masonry veneer	260	N-12	SL72	SL82
Single-storey articulated full masonry and single-storey full masonry	310	N-12	SL72	SL82
Class S				
Clad frame, articulated masonry veneer and masonry veneer	260	N-12	SL72	SL82
Single-storey articulated full masonry	310	N-12	SL72	SL82
Class M				
Clad frame, articulated masonry veneer and masonry veneer	310	N-12	SL72	SL82
Class M-D				
Clad frame and articulated masonry veneer	310	N-12	SL72	SL82
Class H				
Clad frame	310	N-12	SL72	SL82
Articulated masonry veneer	385	N-12	SL82	SL92
Class H-D				
Clad frame	385	N-16	SL72	SL82
Articulated masonry veneer	385	N-16	SL82	SL92

DIMENSIONS IN MILLIMETRES

FIGURE 3.4 (in part) WAFFLE RAFT

Accessed by SWINBURNE UNIVERSITY OF TECHNOLOGY on 15 Aug 2007

@Seismicisolation

@Seismicisolation

NOTES:

1 The minimum stem width shall be 110 mm. The minimum width of the base of an external beam shall be 110 mm for clad frame, single-storey articulated masonry veneer and single-storey masonry veneer and 300 mm for two-storey articulated masonry veneer, two-storey masonry veneer, single-storey articulated full masonry and single-storey full masonry. Additional reinforcement shall be provided for all beams where the stem width exceeds 150 mm. The total number of reinforcement bars in beams shall be as follows:

Stem width mm	Top steel (additional to slab fabric)
110 to 150	0
151 to 220	1
221 to 330	2
331 to 440	3

Beam base width mm	Bottom steel
110 to 150	1
151 to 220	2
221 to 330	3
331 to 440	4

2 The alternative rebate can be used.

3 85 mm slab thickness can be used in garage areas.

4 Construction details are given in Clauses 6.4 and 6.6. See in particular Clause 6.4.3.

5 Internal and edge beams should be arranged to maintain continuity at re-entrant corners.

6 Modifications to the details given in this figure shall not be undertaken without engineering design carried out in accordance with Section 4.

DIMENSIONS IN MILLIMETRES

FIGURE 3.4 (in part) WAFFLE RAFT

Accessed by SWINBURNE UNIVERSITY OF TECHNOLOGY on 15 Aug 2007

@Seismicisolation

@Seismicisolation

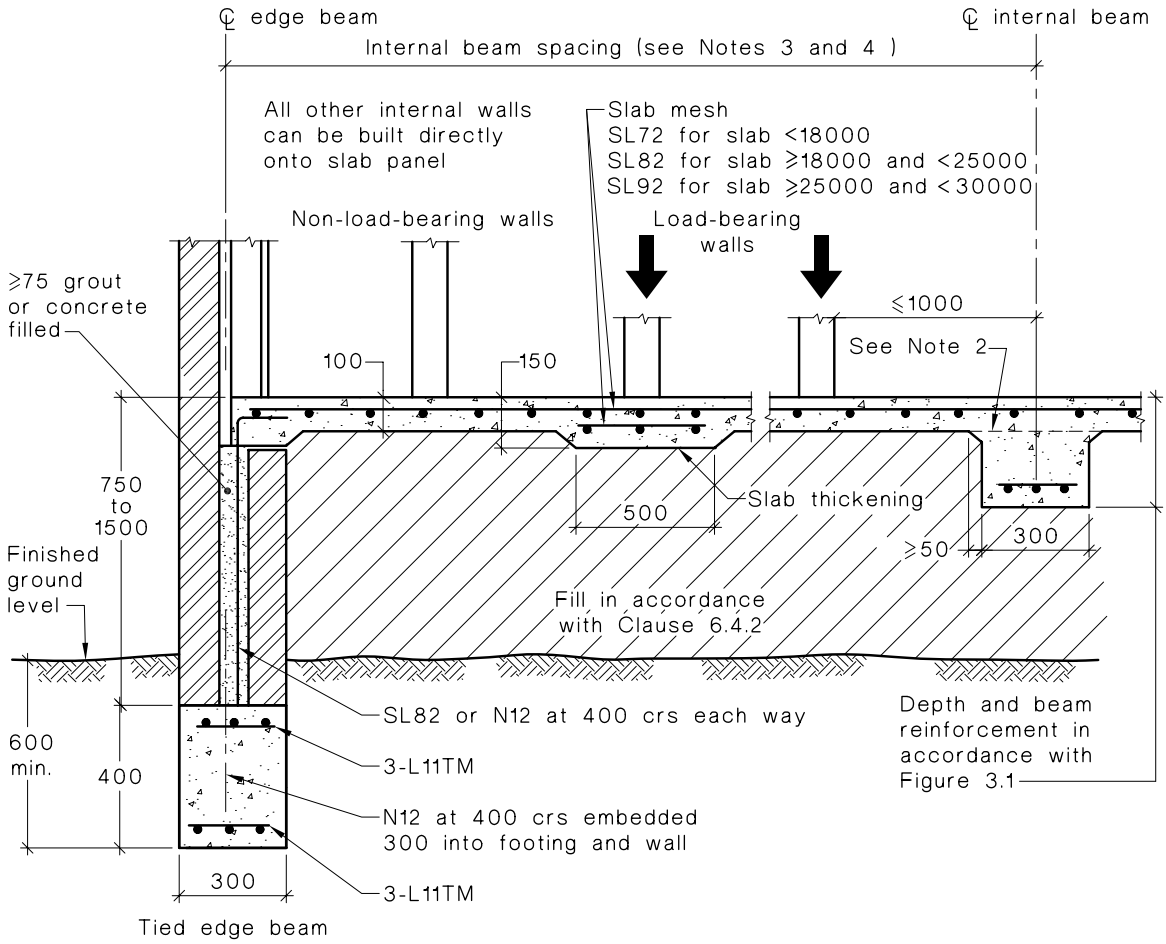

NOTES:

1 The reinforcement of the cavity shall consist of N12 bars at 400 centres in each direction anchored into both the footing and the slab. The cavity shall be filled with well compacted 20 MPa concrete, or grout in accordance with AS 3700. Single-leaf reinforced masonry may also be used.

2 Horizontal construction joints are permitted between the beams and the slab, provided the concrete-to-concrete joint is at least 150 mm wide and is transversed by R10 or N10 fitments at 600 mm centres.

3 Beams shall be spaced in accordance with Figure 3.1.

4 Where local practice indicates satisfactory performance, the internal stiffening beams may be omitted when all internal partition walls are of non-load-bearing framed construction.

5 Construction details are given in Section 6.

DIMENSIONS IN MILLIMETRES

FIGURE 3.5 STIFFENED SLAB WITH DEEP EDGE BEAM FOR MASONRY VENEER AND ARTICULATED MASONRY VENEER CLASS M SITE

Accessed by SWINBURNE UNIVERSITY OF TECHNOLOGY on 15 Aug 2007

@Seismicisolation

@Seismicisolation

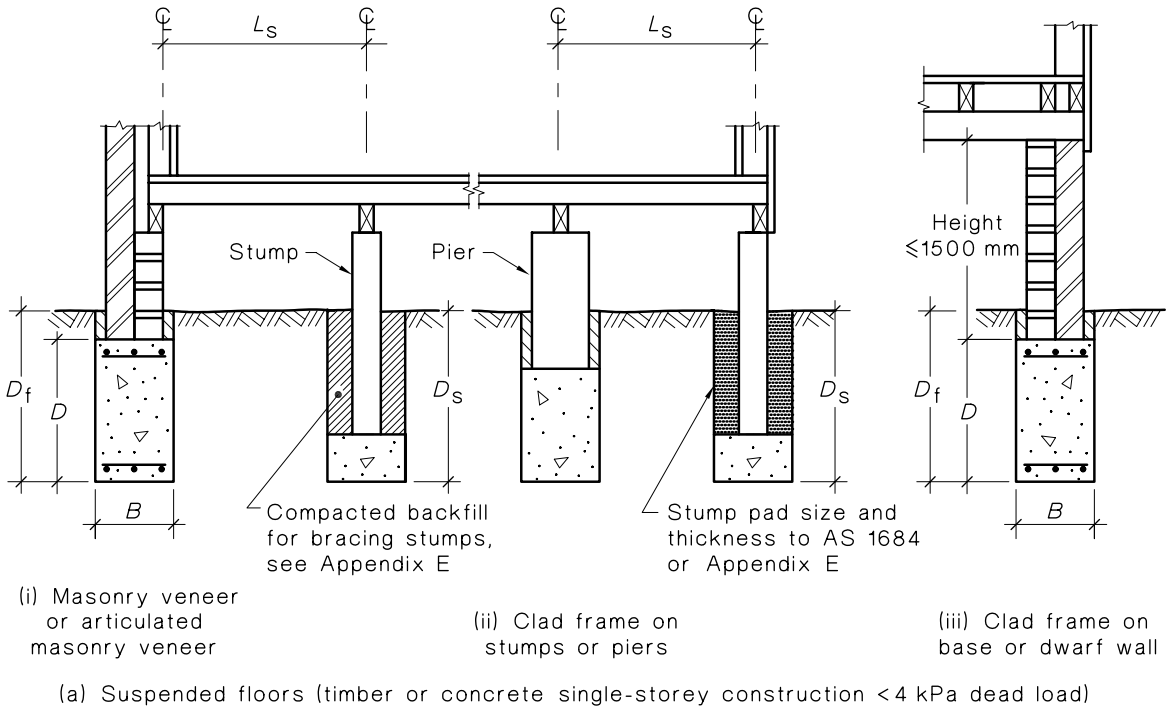

(a) Suspended floors (timber or concrete single-storey construction < 4 kPa dead load)

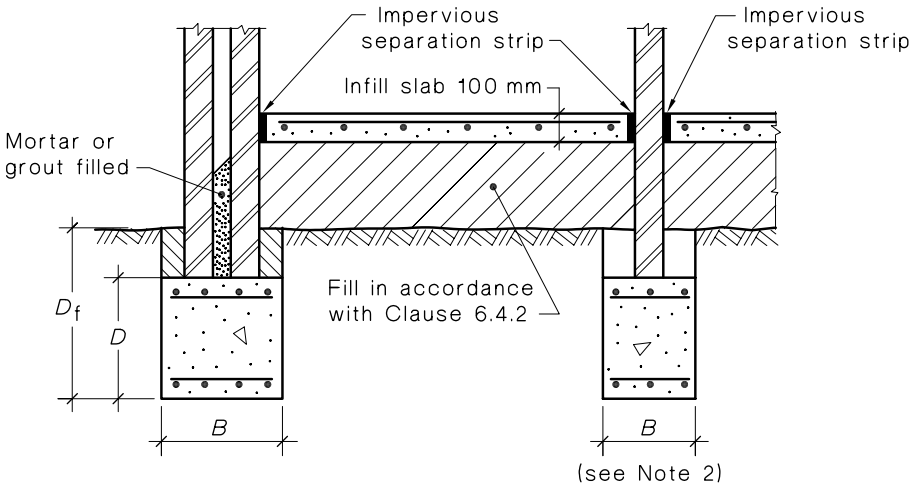

(b) Infill floor Class A and Class S sites

FIGURE 3.6 (in part) STRIP FOOTING SYSTEMS

Accessed by SWINBURNE UNIVERSITY OF TECHNOLOGY on 15 Aug 2007

@Seismicisolation

@Seismicisolation

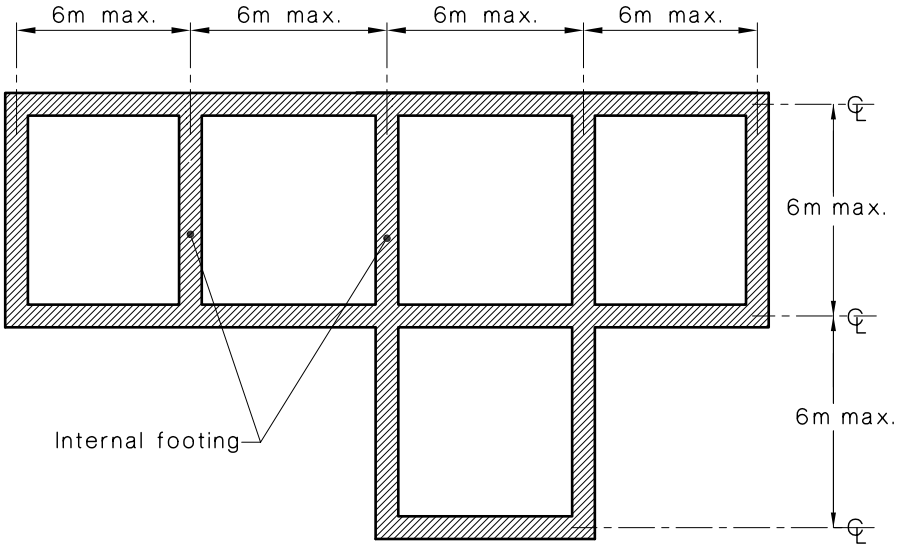

(c) Example of footing system with re-entrant corners

DIMENSIONS IN MILLIMETRES

FIGURE 3.6 (in part) STRIP FOOTING SYSTEMS

Accessed by SWINBURNE UNIVERSITY OF TECHNOLOGY on 15 Aug 2007

@Seismicisolation

@Seismicisolation

Site class	Type of construction	*D*	*B*	Reinforcement	D_s	L_s
Class A	Clad frame	300	300	3-L8TM	400	—
	Articulated masonry veneer	300	300	3-L8TM	400	—
	Masonry veneer	300	300	3-L8TM	400	—
	Articulated full masonry	300	400	4-L8TM	400	—
	Full masonry	300	400	4-L8TM	400	—
Class S	Clad frame	400	300	3-L8TM	400	—
	Articulated masonry veneer	400	300	3-L8TM	400	—
	Masonry veneer	400	300	3-L8TM	400	—
	Articulated full masonry	400	400	4-L11TM	400	—
	Full masonry	500	400	4-L11TM	400	—
Class M	Clad frame	400	300	3-L11TM	500	—
	Articulated masonry veneer	450	300	3-L11TM	500	—
	Masonry veneer	500	300	3-L12TM	500	—
	Articulated full masonry	600	400	4-L12TM	500	—
	Full masonry	900 (Note 2)	400	4-L12TM	500	—
Class M-D	Clad frame	500	300	3-L11TM	800	—
	Articulated masonry veneer	550	300	3-L12TM	800	—
	Masonry veneer	700 (Note 2)	300	3-N16	800	—
	Articulated full masonry	1 100 (Note 2)	400	4-N16	800	—
Class H	Clad frame	500	300	3-L11TM	1 000	≥2 400
	Articulated masonry veneer	600	300	3-L12TM	1 000	≥2 400
	Masonry veneer	850 (Note 2)	300	3-N16	1 000	≥2 400
	Articulated full masonry	1 100 (Note 2)	400	4-N16	1 000	≥2 400

NOTES:

1 All masonry walls shall be supported on strip footings.

2 For all beams 700 m or deeper, as specified in the table above, internal footings shall be provided at no more than 6 m centres, and at re-entrant corners to continue the footings to the opposite external footing (see Figure 3.6).

3 Internal strip footings shall be of the same proportions as the external footing and run from external footing to external footing.

4 'Side slip joints' consisting of a double layer of polyethylene shall be provided at the sides of the footing only.

5 The size and thickness of pads for stumps or piers shall be selected using AS 1684. Sizes for larger loads may be selected using Appendix E.

6 Bracing forces and uplift forces to stumps may be provided for, using the details in Appendix E.

7 If strip footings deeper than those required are used the reinforcement shall be increased to match that specified for the deepened proportions.

8 Infill floors in Figure 3.6(b) shall only be used for Class A and S sites, and may be concrete slabs, brick paving stone flags or compacted or stabilized earth. For concrete slab infill panels, mesh may be required to should normally be provided (see also Clause 5.3.7). SL62 should normally be provided (see also Clause 5.3.7).

9 Where footings are wider than the specified width, an extra bar of the same bar size is required top and bottom for each 100 mm additional width.

10 $D_f \geq D$ +75 mm.

11 For site Classes M-D and H, a provision shall be made by methods such as an adequate crawl space to allow for future re-levelling due to drying effects.

FIGURE 3.6 (in part) STRIP FOOTING SYSTEMS

@Seismicisolation

Accessed by SWINBURNE UNIVERSITY OF TECHNOLOGY on 15 Aug 2007

@Seismicisolation

3.3 REINFORCEMENT EQUIVALENCES

The bar sizes given in Table 3.2 are deemed to comply with the requirements for trench mesh reinforcement in beams and footings. L11TM and L12TM may be replaced by RL1118 and RL1218 mesh respectively. Two layers of L8TM may be used as a replacement for L11TM. Where a single layer of trench mesh would be too wide for the footing or beam, multiple layers, bundled together, or equivalent reinforcement shall be used.

Alternative arrangements of beam or footing reinforcement may be used, if the flexural strength of the section is unimpaired.

TABLE 3.2

REINFORCING BAR SIZES DEEMED TO BE EQUIVALENT TO TRENCH MESH REINFORCEMENT

Trench mesh	Area of steel mm^2	Bar alternative	Trench mesh alternative
2-L8TM	91	2-N10 or 1-N12	—
3-L8TM	136	2-N10 or 2-N12	—
4-L8TM	182	2-N12	2-L11TM
5-L8TM	227	2-N12	3-L11TM
2-L11TM	180	1-N16 or 2-N12	2 x 2-L8TM
3-L11TM	270	3-N12	2 x 3-L8TM
4-L11TM	360	2-N16	2 x 4-L8TM
2-12TM	222	2-N12	3-L11TM
3-12TM	333	3-N12	4-L11TM
4-12TM	444	4-N12	5-L11TM

3.4 SUSPENDED CONCRETE FLOORS IN ONE-STOREY CONSTRUCTION

Suspended concrete floors in one-storey construction shall be designed in accordance with engineering principles except that for short span floors on Class A and S sites the following guidelines may be used for design:

(a) Fill used as temporary support need not be compacted, but clay fill shall be placed at a moisture content that will minimize subsequent swell.

(b) Internal concrete slabs that are suspended between at least two opposite walls and do not support walls or columns may be constructed of 125 mm thickness with SL72 top and SL72 bottom minimum reinforcement, with 20 mm cover top and bottom, for clear spans up to 4.0 m length.

(c) Such floors can be supported on dwarf masonry walls on strip footings.

3.5 FOOTING SYSTEMS FOR TWO-STOREY CONSTRUCTION WITH SUSPENDED CONCRETE FLOOR

For a two-storey building with a suspended concrete floor at the first floor level, the footing system designs given in Figures 3.1 to 3.6 for Class A and S sites can be used provided that for the suspended floor—

(a) the thickness is not greater than 165 mm, or the dead load per unit area is not greater than 4 kPa;

(b) the span is less than 5 m; and

(c) the support is on masonry walls at each end with openings not greater than 2.5 m.

Accessed by SWINBURNE UNIVERSITY OF TECHNOLOGY on 15 Aug 2007

@Seismicisolation

@Seismicisolation

In addition, the width given in those figures for the edge beams and footings shall be increased by 100 mm and where reinforcement is specified the reinforcement both top and bottom shall be increased by one wire of the same diameter.

Where the suspended floor is supported through an internal wall onto the slab panel on the ground, the thickness of the slab panel shall be increased to 200 mm for a width of 500 mm and where reinforcement is specified an extra strip containing three wires of the slab fabric placed in the bottom of the thickened section shall be provided.

3.6 FOOTINGS FOR CONCENTRATED LOADS

3.6.1 Footings for columns

Loads from columns shall be supported by either—

(a) pad footings, which can be integral with a slab, of the proportions in Figure 3.6;

(b) edge beams or strip footings; or

(c) slab panels for supported areas less than 10 m^2.

On reactive clays, concentrated loads from columns shall be supported directly on an edge or internal beam or edge footing, provided that the supported area is not greater than 20 m^2 (see Note 2, Figure E1).

On sites Class M, M–D, H and H–D separate footings shall not be used unless the construction supported is structurally isolated from the rest of the building.

3.6.2 Footings for fireplaces on Class A and S sites

Fireplaces shall be supported on a pad footing 150 mm thick for one-storey construction or 200 mm thick for two-storey construction reinforced top and bottom with SL72 and extending 300 mm past the edges of the masonry except for any edge flush with the outer wall. This footing can be integral with a slab.

Accessed by SWINBURNE UNIVERSITY OF TECHNOLOGY on 15 Aug 2007

@Seismicisolation

@Seismicisolation

SECTION 4 DESIGN BY ENGINEERING PRINCIPLES

4.1 GENERAL

Slabs or footings designed in accordance with engineering principles shall be designed in accordance with the following Clauses and AS 3600 (except where more specific provisions are given here).

Engineering principles may be used to extend the range of validity of the deemed-to-comply designs or to modify the designs set out in Section 3 of this Standard.

The general requirements for footings for rafts designed under this Clause shall be in accordance with Clause 3.1, Figure 3.1 and the relevant sections of Clause 4.4 and Section 5 of this Standard.

4.2 DESIGN LOADS

Slabs and footings and associated superstructures, shall be designed to achieve the performance requirements set out in Clause 1.3 when subjected to the loads noted therein.

4.3 DESIGN OF FOOTING SYSTEMS

Footing systems shall be designed in accordance with one of the following—

(a) raft footing systems supporting a superstructure that relies entirely on the raft to resist cracking, (see Clause 4.4 or 4.6);

(b) footing systems for walls which are able to cantilever without cracking, (see Clause 4.7); or

(c) other footing systems (see Clause 4.6).

4.4 RAFT FOOTING SYSTEMS

A stiffened raft footing system which supports a superstructure that relies entirely on the footing system or raft stiffness to resist movement and cracking shall be proportioned as follows:

(a) For rafts with beams embedded deeper than 1 m in depth, or with connected piers greater than 1 m in depth, the analysis shall consider the influence of skin friction on the sides of the beams or piers according to engineering principles. The uplift resistance of connected piers or anchors shall be taken into account.

(b) The tolerable limits for relative differential movement depend on the form of construction, surface finish and the actual detailing of the superstructure, and in the absence of more specific information shall be taken from Table 4.1.

Accessed by SWINBURNE UNIVERSITY OF TECHNOLOGY on 15 Aug 2007

@Seismicisolation

@Seismicisolation

TABLE 4.1

MAXIMUM DESIGN DIFFERENTIAL MOVEMENT, Δ, FOR DESIGN OF FOOTINGS AND RAFTS

Type of construction	Absolute maximum differential footing movement, Δ, as a function of span, mm	Maximum differential footing movement Δ, mm
Clad frame	≤L/300	40
Articulated masonry veneer	≤L/400	30
Masonry veneer	≤L/600	20
Articulated full masonry	≤L/800	15
Full masonry	≤L/2000	10

NOTE: Bed joint reinforcement of articulated full masonry can be used to increase the allowable movement. Bed joint reinforcement consists of at least three layers of pairs of 3 mm wires galvanized to AS 1650 with an average coating mass of 300 g/m^2.

(c) The effective total width of the flange for slab beams shall be determined as follows:

(i) In sagging mode (edge heave), the effective total width shall be taken as B_w + 0.1 L for an edge beam and B_w + 0.2 L for an internal beam.

(ii) In hogging mode (centre heaven), the effective total width shall be assessed by the designer as between B_w + 0.1 L and 2 m for an edge beam, and B_w + 0.2 L and 4 m for an internal beam.

In no case shall the flange width be taken as greater than the distance halfway to the adjacent beams.

(d) From the soil-structure analysis using the loads given in Clause 1.4, the design moment (M*) and the required stiffness (EI) may be determined. The structural design for strength of the cross-section shall satisfy the requirement that—

$$M^* \leq \phi M_u \qquad \ldots 4.4$$

where

M_u is the ultimate strength calculated in accordance with AS 3600

ϕ is the strength reduction factor given in AS 3600.

NOTE: Two acceptable methods of design (Walsh and Mitchell) using soil structure interaction for stiffened rafts are described in Appendix F.

(e) The stiffness, EI, of the slab shall be not less than that required by the analysis. In the determination of EI the value of E shall be taken as 15,000 MPa for N20 concrete and I shall be as defined in AS 3600.

(f) To ensure ductility, the cross-section shall be reinforced so that the ultimate strength calculated on the basis of a reinforced section (M_u) is 20% greater than the cracking moment capacity (M_{cr}), where M_{cr} may be determined for sagging moments for 20 MPa concrete using a tensile strength of 2.7 MPa and for hogging moments 1.8 MPa.

(g) Shear reinforcement need not be provided in raft beams unless the calculated shear force exceeds the design strength of the unreinforced section. Side face reinforcement is not required in deep raft beams.

Accessed by SWINBURNE UNIVERSITY OF TECHNOLOGY on 15 Aug 2007

@Seismicisolation

@Seismicisolation

4.5 MODIFICATION OF STANDARD RAFT DESIGNS

4.5.1 Application

This Clause may be used provided that the design parameters are within the following range:

Design parameter	Range
y_s	10 mm to 70 mm if H_s > 3 m or 100 mm if H_s < 3 m
Δ	5 mm to 50 mm
Span	5 m to 30 m
Beam spacing	≤1.25 values in Figure 3.1 (see also Clause 5.3.9)
Beam depth	250 mm to 1000 mm
Minimum depth of any beam	≤0.7 max. beam depth
Beam width	110 mm to 400 mm
Average load	to 15 kPa
Edge line load	to 15 kN/m

This Clause may be used to modify the standard raft designs in Section 3 where the value of y_s is lower than the upper limit in Section 3, or where the beam layout provides a spacing less than the minimum required. It may be used to override the beam spacing and reinforcement provisions, provided that the slab mesh is not less than SL72 for slab spans <18 m; SL82 for spans ≥18 m and <25 m; and SL92 for spans ≥25 m and provided that the ductility requirements of Clause 4.4(e) are satisfied. It shall not be necessary to use a design stronger than the standard design for the site classification nor is it permitted to use a design weaker than the design given for the next lower site Class.

For types of construction outside the range of that given in Figure 3.1 and Table 3.1 for which no standard design is appropriate this method may be used.

4.5.2 Modification procedure

The value of y_s/Δ shall be determined where Δ is the permissible maximum differential movement given in column 3 of Table 4.1 for the appropriate construction. From Figure 4.1 and the value of y_s/Δ, the design shall provide in each direction the stiffness parameter $\log\left\{\sum\left(\frac{B_W D^3}{12}\right)/W\right\}$ where the summation is determined over all the edge and internal beams and Bw is the beam web width in millimetres, D is the overall depth of the beam in millimetres and W is the overall width of the slab in metres normal to the direction of the beams being considered. The strength shall be provided by the satisfaction of the ductility requirements of Clause 4.4(e). For non-rectangular plans the design shall be based on overlapping rectangles.

4.5.3 Detailing and construction requirements

Except as modified in Clause 4.5.2, detailing and construction shall be in accordance with the requirements of Sections 5 and 6.

4.6 DESIGN OF FOOTING SYSTEMS OTHER THAN STIFFENED RAFTS

The design of shallow footing systems other than stiffened rafts shall be in accordance with the general principles outlined in Clause 4.4, modified to take into account the soil-structure interaction of the footing system. In particular, lift-off shall not be considered in strip footings deeper than 0.6 m.

Accessed by SWINBURNE UNIVERSITY OF TECHNOLOGY on 15 Aug 2007

@Seismicisolation

@Seismicisolation

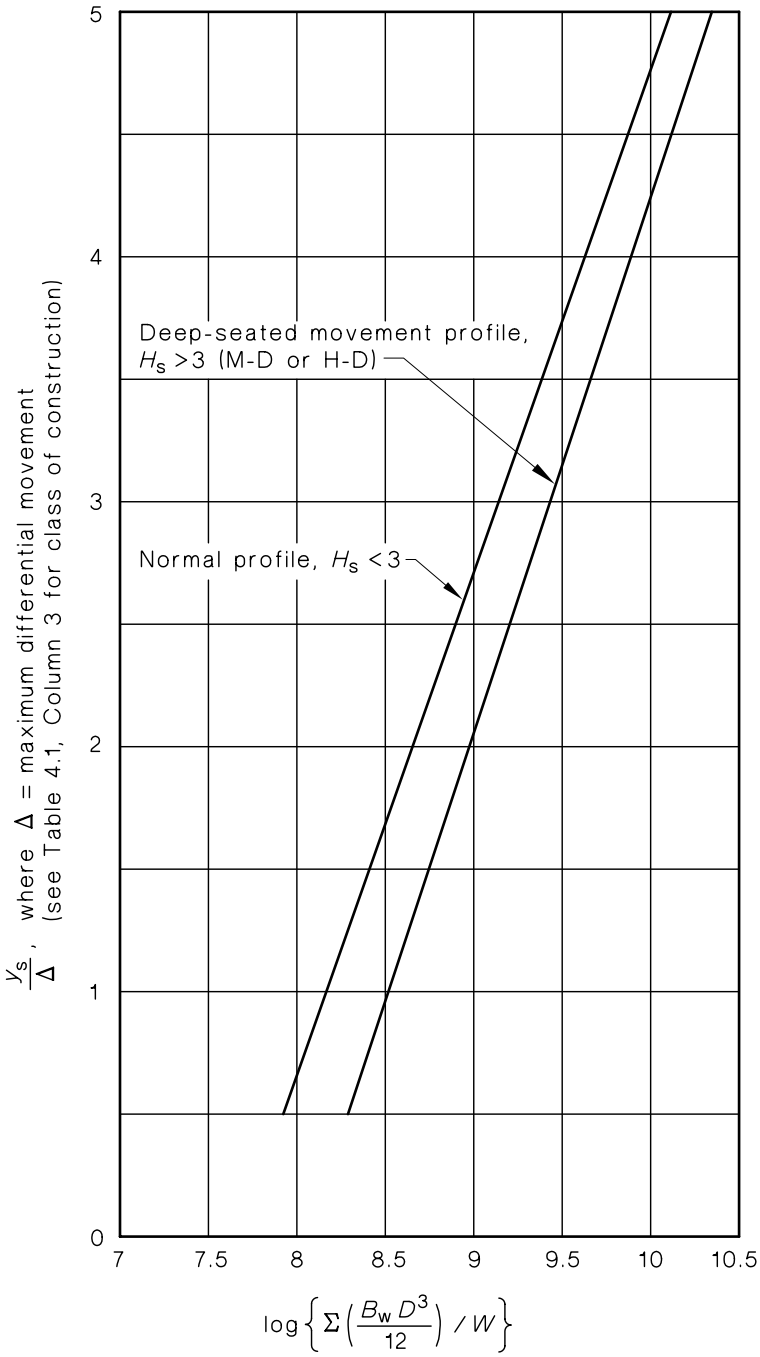

where B_w = width of beam web, in millimetres
D = overall depth of beam, in millimetres
W = overall width of slab, in metres

FIGURE 4.1 MOVEMENT RATIO VERSUS UNIT STIFFNESS

4.7 FOOTING SYSTEMS FOR REINFORCED SINGLE LEAF MASONRY WALLS

For buildings whose walls have sufficient strength to span for significant distances over sagging or hogging footings (either as a cantilever over hogging footings or simply supported over sagging footings), it shall be permissible to proportion the wall-footing system to utilize the flexural strength of the wall.

Accessed by SWINBURNE UNIVERSITY OF TECHNOLOGY on 15 Aug 2007

@Seismicisolation

@Seismicisolation

Design of the masonry shall be in accordance with AS 3700 to resist the action effects derived in this Standard. The required dimensions, reinforcement and disposition of footings shall be designed to satisfy the principles of Clause 4.4 and in accordance with Items (a) or (b) following:

(a) If the walls are not structurally connected to the footing or slab system, the length over which a particular type of wall can span before it cracks or experiences excessive deflection shall be determined and the footings proportioned to ensure that this length is not exceeded and the potential for the footing to separate from the wall is limited to 5 mm, unless specific provision is made for movement.

(b) If the walls of a building are structurally connected to the footing or slab system by means of steel starter bars, anchors or equivalent, the combined strength and stiffness of the wall and footing/slab system shall be considered to determine the length over which the particular combination can span before it cracks or experiences excessive deflection. The footings, floor and the wall shall be proportioned and reinforced to ensure that this length is not exceeded.

The joints between adjacent wall panels shall be designed to accommodate any movement resulting from footing movement. The wall configuration shall be such that each wall is prevented from tilting, twisting or distorting to an extent which limits the serviceability of the building.

In determining the spanning ability, the following points shall be considered:

(i) The effect of increased load from upper floors or roof structure in diminishing this ability to span.

(ii) The strengthening effect (if any) of joint reinforcement in masonry walls.

(iii) The strengthening effect (if any) of steel reinforcement in the cores and bond beams of reinforced or partially reinforced hollow masonry.

(iv) The strengthening effect (if any) of render, plaster, plasterboard or other veneers fixed to the wall.

4.8 DESIGN FOR TIMBER PILED FOOTING SYSTEMS

The design of timber piled footing systems may be carried out in accordance with Appendix G.

Accessed by SWINBURNE UNIVERSITY OF TECHNOLOGY on 15 Aug 2007

@Seismicisolation

@Seismicisolation

SECTION 5 DETAILING REQUIREMENTS

5.1 GENERAL

The detailing of footing systems in accordance with Sections 3 and 4 shall comply with Clauses 5.2 to 5.4. For Class H or E sites, additional requirements are given in Clause 5.5. See also AS 3660.1 and AS 3700.

5.2 DRAINAGE REQUIREMENTS

5.2.1 General requirements

The drainage and height of the floor level above finished ground level may be affected by factors other than structural design requirements. Such factors include the following:

(a) The local plumbing requirements, in particular the height of the overflow relief gully relative to drainage fittings and ground level.

(b) The run-off from storms and local topography.

(c) The effect of excavation or filling.

(d) The possibility of flooding.

(e) The effects of existing and post-construction landscaping.

(f) The level of existing legal point of stormwater discharge.

(g) Termite management (see AS 3660.1).

Drainage shall be designed and constructed to avoid water ponding against or near the footing. The ground in the immediate vicinity of the perimeter footing, including the ground uphill from the slab on cut-and-fill sites, shall be graded to fall 50 mm minimum away from the footing over a distance of 1 m.

Alternative drainage systems will be required on zero lot line construction. Any paving shall also be suitably sloped.

5.2.2 Specific requirements for slabs on Class 1 buildings

The minimum height of the slab on a Class 1 building above finished ground level shall be 150 mm, except in sandy, well-drained areas where the minimum height shall be 100 mm. These heights can be reduced locally to 50 mm near adjoining paved areas that slope away from the building.

NOTES:

1 These minimum heights specified above are to the top of the finished ground, landscaping or paving level.

2 The minimum height of the slab specified above is for the purpose of reducing the risk of surface water penetrating the building.

3 In determining the slab height above ground level, consideration should be given to the requirements of AS 3500.2, which requires a minimum height from the top of the overflow gully riser to the lowest plumbing fixture connected to the drain. Similarly, consideration should be given to AS 3700, which sets a minimum height from finished ground level, etc., to the damp-proof coursing level and AS 3660.1, which gives a minimum height from finished ground or paving levels to some termite barriers.

Accessed by SWINBURNE UNIVERSITY OF TECHNOLOGY on 15 Aug 2007

@Seismicisolation

@Seismicisolation

5.3 REQUIREMENTS FOR RAFTS AND SLABS

5.3.1 Concrete

Concrete shall be not less than N20 (see AS 1379) grade, with 20 mm nominal maximum aggregate size. Slump shall be selected to suit construction requirements.

5.3.2 Reinforcement

Reinforcement in rafts and slabs shall have covers and be spliced in accordance with the following:

(a) Cover for the reinforcement shall be 40 mm to unprotected ground, 40 mm to external exposure, 30 mm to a membrane in contact with the ground, and 20 mm to an internal surface. The slab mesh shall be placed towards the top of the raft or slab within the zone defined by these limits.

(b) Raft or slab mesh shall be lapped by one full panel of mesh so that the two outermost transverse wires of one sheet overlap the two outermost transverse wires of the sheet being lapped, such as shown in Figure 5.1.

(c) Trench mesh shall have all cross wires cut flush with the outer main wires. Trench mesh in beams shall be overlapped by the width of the fabric at T- and L-intersections. Trench mesh shall be spliced, where necessary, by a lap of 500 mm.

(d) Reinforcing bars shall have a lap length at splices not less than 500 mm. At T- and L-intersections, the bars shall be continued across the full width of the intersection. At L-intersections, one outer bar shall be bent and continued 500 mm, or a bent lap bar 500 mm long on each leg shall be provided.

(e) Service penetrations shall be permitted through the middle third of the edge and stiffening beams. The effect of other service penetrations shall be taken into account by the provision of extra concrete depth or reinforcement.

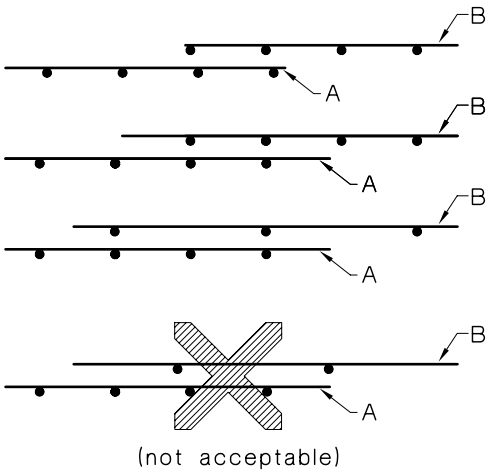

NOTE: The wire orientation is illustrative only.

FIGURE 5.1 ALTERNATIVE METHODS OF LAPPING OF FABRIC

5.3.3 Vapour barriers and damp-proofing membranes

5.3.3.1 *General*

The raft or slab shall be provided with a vapour barrier, or where required, a damp-proofing membrane.

NOTE: Damp-proofing membranes are normally required in South Australia. Their use is also recommended in areas prone to rising damp and salt attack.

Accessed by SWINBURNE UNIVERSITY OF TECHNOLOGY on 15 Aug 2007

@Seismicisolation

@Seismicisolation

5.3.3.2 *Materials*

The materials required for vapour barriers and damp-proofing membranes are as follows:

(a) 200 µm (0.2 mm) thick polyethylene film in accordance with Item (c)(i), as follows:

(i) *Vapour barrier*—medium impact resistance in accordance with Item (c)(ii).

(ii) *Damp-proofing membrane*—high impact resistance in accordance with Item (c)(ii), and resistant to puncture and penetration in accordance with Item (c)(iii).

(b) Film branded continuously 'AS 2870 Concrete underlay, 0.2 mm—Medium (or high as appropriate) impact resistance', together with manufacturer or distributors name, trademark or code.

(c) Criteria specified for vapour barriers and damp-proofing membranes shall be determined by the following methods:

(i) *Film thickness—0.2 mm*—shall be determined using the method of test outlined in AS/NZS 4347.9, except that three tests per metre width of film shall be carried out across the full width of the film, with the resulting mean average thickness to be between 180 µm and 220 µm and a maximum of only one measurement to be below 170 µm for a material pass to be recorded.

(ii) *Impact resistance*—shall be determined using the falling dart impact test outlined in AS 4347.6 and the following:

(A) Using a load of 180 grams for medium impact film and 310 grams for high impact film and a drop height of 660 mm, one test shall be carried out on the fold of the film and the film shall not fail.

(B) Using a load of 200 grams for medium impact film and 340 grams for high impact film and a drop height of 660 mm, two tests per metre width of film shall be carried out across the full width of the body of the film and 75% of these tests shall pass for a material pass to be recorded.

(iii) *Resistance to puncturing and moisture penetration*—shall be determined using the CSIRO 'Method for determination of the penetration resistance of water vapour barriers to falling aggregate'. Vapour permeance following this test shall not exceed 0.02 mg/N.s with no punctures or rips in the film.

5.3.3.3 *Installation*

Both vapour barriers and damp-proofing membranes shall be installed as follows:

(a) The sheet shall be placed beneath the slab so that the bottom surface of the slab and beams, including internal beams, is entirely underlaid. The membrane shall extend under the edge beam to ground level, however, where justified by satisfactory local experience a vapour barrier may be terminated at the internal face of external beams as shown on Figure 5.2(a).

(b) Lapping at joints shall be not less than 200 mm for continuity.

(c) Penetrations by pipes or plumbing fittings shall be taped or sealed with a close-fitting sleeve or made continuous with the vapour barrier or damp-proof membrane by taping or by lapping according to Item (b).

5.3.4 Edge rebates

Edge rebates for slab on ground, stiffened raft or waffle raft with masonry cavity or veneer construction shall comply with the following:

(a) The rebate depth shall be not less than 20 mm. The edge rebate may be stepped along its length.

Accessed by SWINBURNE UNIVERSITY OF TECHNOLOGY on 15 Aug 2007

@Seismicisolation

@Seismicisolation

(b) It shall be permissible to construct the exterior masonry wall past the edge of the rebate but in no case shall the overhang exceed 15 mm.

(c) The edge rebate shall be flashed and drained. If weepholes are used, they shall be spaced at not more than 1.2 m and be located above the finished ground level. Any portion of the deepened rebate that cannot be drained shall be mortar filled.

(d) Where the edge rebate exceeds 150 mm in depth, the minimum width of the edge beam at the base of the rebate shall not be less than 200 mm, except that if R10 or N10 ties at 900 mm spacings are provided to resist vertical forces, this minimum width can be reduced to 150 mm. This Clause shall not apply to waffle rafts.

(e) The depth of concrete below the edge rebate shall be not less than 150 mm.

(f) Edge rebates are not required for construction with single-leaf masonry.

(g) In areas of high salt damp, careful detailing of damp-proof courses is required.

(h) Where the edge beams are retaining more than 450 mm of fill, see Clause 6.4.5. Alternatively, the design shall be in accordance with engineering principles.

(i) Where the edge rebate depth is greater than 400 mm, the minimum stem width shall be 200 mm. The effect of the rebate shall be taken into account in accordance with engineering principles.

Permissible arrangements of the edge rebate are shown in Figure 5.2. Typical detailing for footings supporting single-leaf masonry walls is shown in AS 2870 Supplement 1.

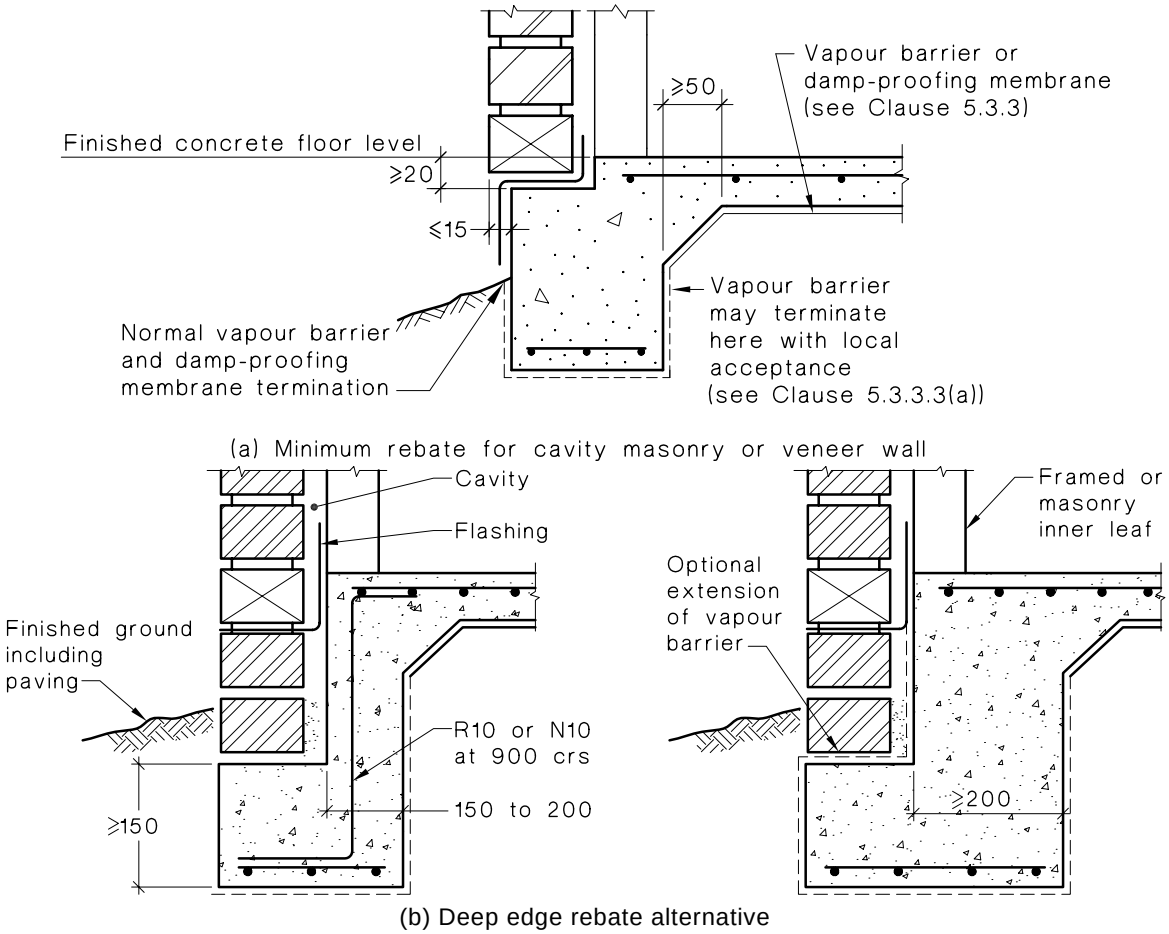

NOTE: The cavity and flashing details shown are examples only. See AS 3700.

DIMENSIONS IN MILLIMETRES

FIGURE 5.2 EDGE REBATE DETAILS

@Seismicisolation

Accessed by SWINBURNE UNIVERSITY OF TECHNOLOGY on 15 Aug 2007

@Seismicisolation

5.3.5 Recesses in slab panels

Where the raft or slab surface is recessed to provide for services, the soffit of the slab shall be deepened to maintain the required thickness and the reinforcement shall be continuous or lapped as shown in Figure 5.3.

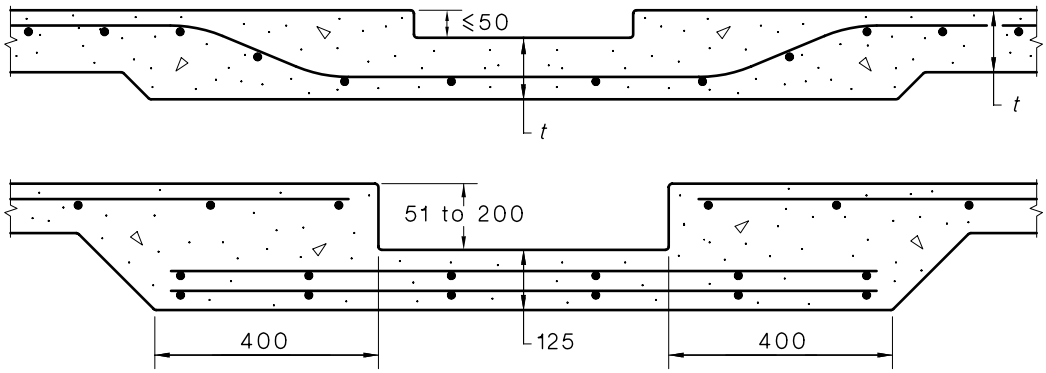

DIMENSIONS IN MILLIMETRES

FIGURE 5.3 SLAB DETAIL AT A RECESS

5.3.6 Heating cables and pipes

Heating cables and pipes shall be embedded in the slab as follows:

(a) Electric heating cables may be embedded in the slab without any increase in thickness or reinforcement.

(b) Hot water heating pipes may be embedded in a slab, provided that the slab thickness is increased by 25 mm and an increase made in the mesh of one level; for example, SL72 for SL62, SL82 for SL72 and SL92 for SL82. The fabric shall be placed at a suitable level to accommodate the pipes, subject to the requirements of Clause 5.3.2(a).

5.3.7 Shrinkage control

Shrinkage shall be controlled as follows:

(a) Where brittle floor coverings are to be used over an area greater than 16m^2, extra measures shall be taken to control the effect of shrinkage cracking. Such measures shall include one of the following:

(i) The amount of shrinkage reinforcement shall be increased to SL92 or equivalent throughout the affected slab panels. Alternatively, an additional sheet of slab mesh shall be placed over the affected area.

(ii) The bedding system for brittle coverings shall be selected on the basis of the expected slab movement and the characteristics of the floor covering.

(iii) The placement of floor coverings shall be delayed.

NOTE: A minimum period of three-months drying of the concrete is usually required before the placement of brittle floor coverings.

(b) At re-entrant corners, two strips of 3-L8TM, or one strip of 3-L11TM or 3-N12 bars, shall be placed diagonally across a potential crack. All such reinforcement shall have a minimum length of 2 m.

5.3.8 Beam continuity in rafts

Internal beams shall be continuous from edge to edge of the slab. Where beams are at different levels, as may occur in two-pour systems, special care is required to provide

@Seismicisolation

Accessed by SWINBURNE UNIVERSITY OF TECHNOLOGY on 15 Aug 2007

@Seismicisolation

continuity. Internal beams shall be located to provide continuity with the edge beams at re-entrant corners. Where one side of the re-entrant corner is less than 1.5 m, continuity of beams shall be provided by one of the details specified in Figure 5.4.

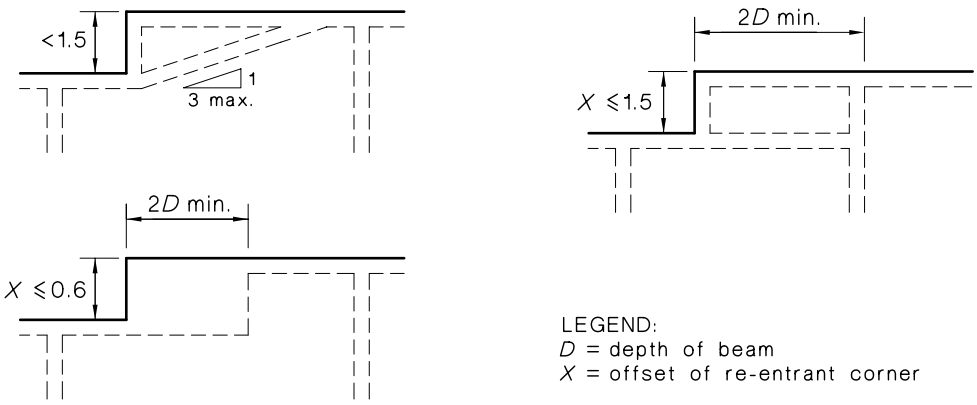

FIGURE 5.4 LAYOUT OF FOOTING BEAMS

5.3.9 Beam layout restrictions

For Class M and H sites, in addition to the beam spacing criterion given in Figure 3.1 at external corners, the maximum spacing between intersections of an internal beam with an external beam shall be 4.0 m. See Figure 5.5.

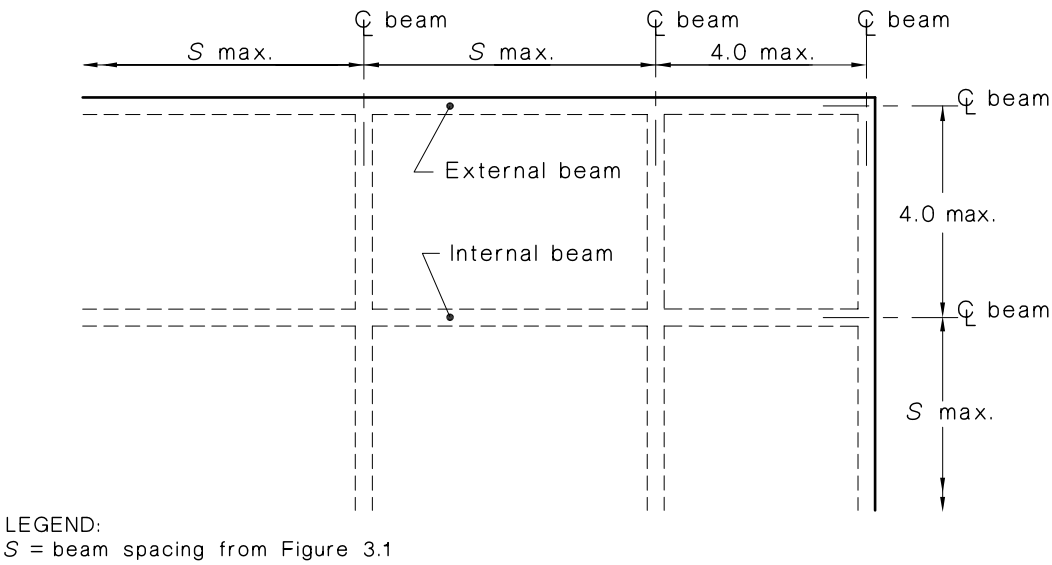

FIGURE 5.5 BEAM SPACING MEASUREMENT FOR CLASS M & H SITES

5.4 REQUIREMENTS FOR PAD AND STRIP FOOTINGS

5.4.1 Concrete

Concrete shall be not less than N20 grade, with 20 mm nominal maximum aggregate size. Slump shall be selected to suit the construction conditions.

5.4.2 Reinforcement

Reinforcement in pad and strip footings shall comply with the following:

(a) Trench mesh reinforcement may be replaced by the equivalent reinforcing bars.

(b) Design cover to the reinforcement shall be 40 mm.

@Seismicisolation

Accessed by SWINBURNE UNIVERSITY OF TECHNOLOGY on 15 Aug 2007

@Seismicisolation

(c) Trench mesh in footings shall be anchored by the width of the fabric at T- and L-intersections and at splices shall be lapped by 500 mm.

(d) The lap length of bar splices shall be not less than 500 mm. At T- and L-intersections, the bars shall be continued across the full width of the intersection. At L-intersections, one outer bar shall be bent and continued for 500 mm, or a bent lap bar 500 mm long on each leg shall be provided.

(e) Service penetrations shall be permitted through the middle third of the footing. The effect of other footing penetrations shall be taken into account by the provision of extra depth or reinforcement.

5.4.3 Stepping of footings

The base of a strip footing shall be horizontal or at a slope of not more than 1 in 10, and the footing shall be stepped in accordance with one of the methods given in Figure 5.6.

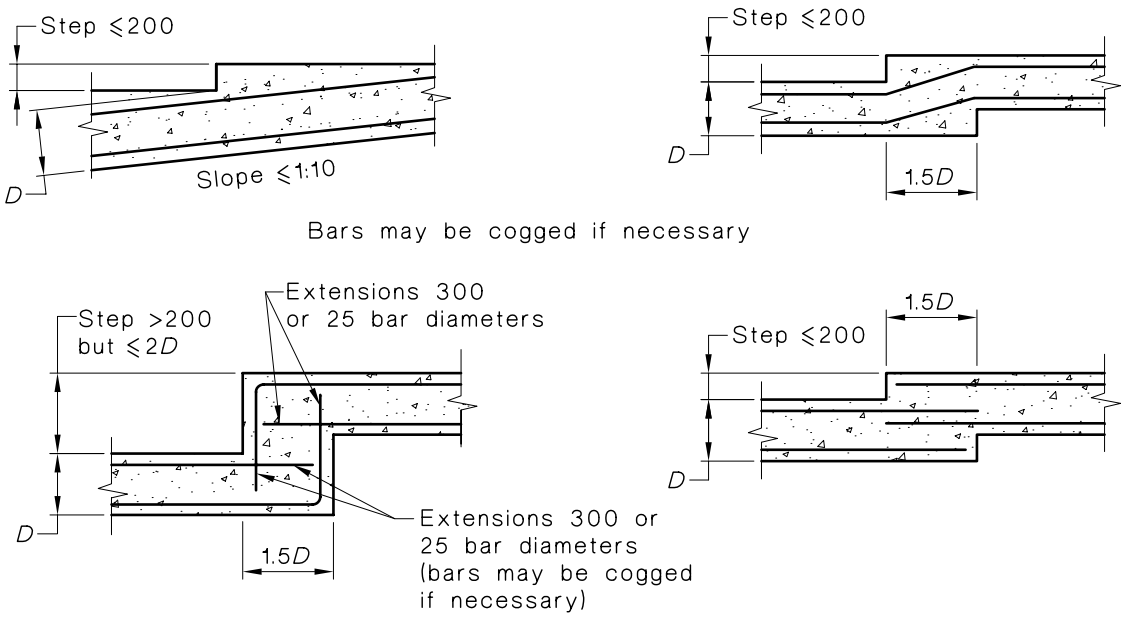

DIMENSIONS IN MILLIMETRES

FIGURE 5.6 ACCEPTABLE METHODS OF STEPPING STRIP FOOTINGS

Accessed by SWINBURNE UNIVERSITY OF TECHNOLOGY on 15 Aug 2007

@Seismicisolation

@Seismicisolation

5.5 ADDITIONAL REQUIREMENTS FOR CLASS H AND E SITES

5.5.1 Architectural restrictions

The following aspects of superstructure design and layout shall be used to reduce the effects of movement:

(a) Masonry shall be detailed to minimize the possibility of damage.

(b) Extensions shall be isolated from the original structure by means of articulation to allow for differential movement.

(c) In masonry construction articulation joints shall be introduced at abrupt changes in construction such as at large openings or near corners except where the wall is designed to be reinforced masonry.

5.5.2 Variations in foundation material

If the footing or slab is partly on rock and partly on reactive clay, structural continuity of the entire footing shall be maintained and allowance shall be made for potential movement in the superstructure near the junction of foundation types.

5.5.3 Drainage requirements

Allotments containing reactive sites classified as H or E shall be provided with an adequate system of drainage designed in accordance with the following:

(a) Surface drainage of allotments for reactive sites for both footings and slabs shall be considered in the design of the footing system, and care shall be taken with surface drainage of the allotment from the start of construction. The drainage system shall be completed by the finish of construction of the house.

(b) Plumbing trenches shall be sloped away from the house and shall be backfilled with clay in the top 300 mm within 1.5 m of the house. The clay used for backfilling shall be compacted. Where pipes pass under the footing system, the trench shall be backfilled with clay or concrete to restrict the ingress of water beneath the footing system.

(c) Subsurface drains shall be free draining and shall be able to be inspected and maintained. Subsurface drains shall be protected by filters and geotextiles.

NOTE: Wherever practicable, subsurface drains should be avoided near footings.

5.5.4 Plumbing requirements

Allotments containing reactive sites classified as H or E shall be provided with an adequate system of plumbing detailed in accordance with the following:

(a) Penetrations of the edge beams of a raft and perimeter strip footings shall be avoided, but where necessary shall be sleeved to allow for movement.

Closed-cell polyethylene lagging shall be used around all stormwater and sewer pipe penetrations through external footings. The lagging shall be a minimum of 20 mm thick on Class H sites and 40 mm thick on Class E sites. Sleeves allowing equivalent movements may be used as an alternative. Lagging is not required around vertical penetrations through slab panels.

(b) Connection of stormwater drains and waste drains shall include flexible connections.

(c) Septic tanks and associated soakage areas shall be located to minimize soil moisture increase within the foundation.

(d) Plumbing and drainage under a slab shall be avoided where practicable. Pipes may be encased in concrete or in recesses in the slab when provided with flexible joints at the exterior of the slab.

NOTE: Methods used should comply with local plumbing and drainage regulations.

Accessed by SWINBURNE UNIVERSITY OF TECHNOLOGY on 15 Aug 2007

@Seismicisolation

@Seismicisolation

APPENDIX B

PERFORMANCE CRITERIA AND FOUNDATION MAINTENANCE

(Informative)

B1 GENERAL

The designs and design methods given in the Standard are based on the performance requirement that significant damage can be avoided provided that foundation site conditions are properly maintained. This is expressed in Section 1 by the statement that the probability of failure for reasonable site conditions is low, but is higher if extreme conditions are encountered. It is neither possible nor economical to design for the extreme conditions that could occur in the foundation if a site is not properly maintained. The expected standard of foundation maintenance is described in Paragraph B2.

Some minor cracking and movement will occur in a significant proportion of houses, particularly those on reactive clays, and the various levels of damage are discussed in Paragraph B3.

The performance requirements of a concrete floor in respect to shrinkage cracking and moisture reaction with adhesives are discussed in Paragraph B4.

A more extensive discussion of the material in Paragraphs B2 to B4 is contained in the CSIRO pamphlet, 10-91, 'Guide to Home Owners on Foundation Maintenance and Footing Performance' and its recommendations should be followed.

B2 FOUNDATION MAINTENANCE

B2.1 Foundation soils

All soils are affected by water. Silts are weakened by water and some sands can settle if heavily watered, but most problems arise on clay foundations. Clays swell and shrink due to changes in moisture content and the potential amount of the movement is implied in the site classification in this Standard, which is designated as follows:

(a) A means Stable (Non-reactive).

(b) S means Slightly Reactive.

(c) M means Moderately Reactive.

(d) H means Highly Reactive.

(e) E means Extremely Reactive.

Sites classified Class A and S may be treated as non-reactive sites in accordance with Paragraph B2.2. Sites classified as M, H and E should comply with the recommendations given in Paragraph B2.3.

B2.2 Class A and S sites

Sands, silts and clays should be protected from becoming extremely wet by adequate attention to site drainage and prompt repair of plumbing leaks.

Accessed by SWINBURNE UNIVERSITY OF TECHNOLOGY on 15 Aug 2007

@Seismicisolation

@Seismicisolation

B2.3 Class M, H, and E

Sites classified as M, H, or E should be maintained at essentially stable moisture conditions and extremes of wetting and drying prevented. This will require attention to the following:

(a) *Drainage of the site* The site should be graded or drained so that water cannot pond against or near the house. The ground immediately adjacent to the house should be graded to a uniform fall of 50 mm minimum away from the house over the first metre. The subfloor space for houses with suspended floors should be graded or drained to prevent ponding where this may affect the performance of the footing system.

The site drainage recommendations should be maintained for the economic life of the building.

(b) *Limitations on gardens* The development of the gardens should not interfere with the drainage requirements or the subfloor ventilation and weephole drainage systems. Garden beds adjacent to the house should be avoided. Care should be taken to avoid overwatering of gardens close to the house footings.

(c) *Restrictions on trees and shrubs* Planting of trees should be avoided near the foundation of a house or neighbouring house on reactive sites as they can cause damage due to drying of the clay at substantial distances. To reduce, but not eliminate, the possibility of damage, tree planting should be restricted to a distance from the house of:

(i) 1½ × mature height for Class E sites.

(ii) 1 × mature height for Class H sites.

(iii) ¾ × mature height for Class M sites.

Where rows or groups of trees are involved, the distance from the building should be increased. Removal of trees from the site can also cause similar problems.

(d) *Repair of leaks* Leaks in plumbing, including stormwater and sewerage drainage should be repaired promptly.

The level to which these measures are implemented depends on the reactivity of the site. The measures apply mainly to masonry houses and masonry veneer houses. For frame houses clad with timber or sheeting, lesser precautions may be appropriate.

B3 PERFORMANCE CRITERIA FOR WALLS

It is acknowledged that minor foundation movements occur on nearly all sites and that it is impossible to design a footing system that will protect the house from movement under all circumstances. The expected performance of footing systems designed in accordance with the Standard is defined in terms of the damage classifications in Table C1, Appendix C.

Crack width is used as the major criterion for damage assessment, although tilting and twisting distortions can also influence the assessment. Local deviations of slope of walls exceeding 1/150 are undesirable. The assessment of damage may also be affected by where it occurs and the function of the building, although these effects are not likely to be significant in conventional housing. In the classification of damage, account should also be taken of the history of cracking. For most situations Category 0 or 1 should be the limit. However, under adverse conditions, Category 2 should be expected although such damage should be rare. Significant damage is defined as Category 3 or worse.

For Category 1 or 2 damage, remedial action should consist of stabilizing the moisture conditions of the clay and paying attention to repairing or disguising the visual damage. This should be regarded as part of the normal maintenance of houses on reactive clays.

Even significant masonry cracking with crack widths over 5 mm often has no influence on the function of the wall and only presents an aesthetic problem. Generally, the remedial

Accessed by SWINBURNE UNIVERSITY OF TECHNOLOGY on 15 Aug 2007

@Seismicisolation

@Seismicisolation

action for such damage should start with an investigation to establish the cause of the damage. In many cases the treatment should consist of stabilizing moisture conditions by physical barriers or paths or replenishing moisture in dry foundations. This can be followed by repair of the masonry and wherever possible added articulation should be included while repairs are being effected. Structural repairs to the footing system such as deep underpinning should only be considered as the last resort.

Underpinning should generally be avoided where the problem is related to reactive clays, although it is recognized there may be occasional situations where underpinning or other structural augmentation work is appropriate. None of this structural augmentation work should be undertaken without proper engineering appraisal.

In some cases, walls may be designed to span sagging footings and cantilever beyond hogging footings. In such cases, satisfactory performance involves the wall remaining free of cracks and articulation joint movements, remaining within the limits for the particular jointing system.

B4 PERFORMANCE CRITERIA FOR A CONCRETE FLOOR

Shrinkage cracking can be expected in concrete floors. Concrete floors can also be damaged by swelling of reactive clays or settlement of fill. The categories of damage are given in Table C2, Appendix C. In the classification, account should be taken of whether the damage is stable or likely to increase, and an allowance should be made for any deviations in level which resulted from, or during construction.

The time of attachment of floor coverings and the selection of the adhesive for them should take into account the moisture in the concrete floor and its possible effect on adhesion. Concrete floors can take a considerable time to dry (three to nine months).

Floor coverings and their adhesives can be damaged by moisture in the concrete and by the shrinkage that occurs as the concrete dries. Drying could take three months or more. The time of fixing of floor coverings and the selection of the adhesive should take these factors into account (see AS 3958.1).

Accessed by SWINBURNE UNIVERSITY OF TECHNOLOGY on 15 Aug 2007

@Seismicisolation

@Seismicisolation

APPENDIX C

CLASSIFICATION OF DAMAGE DUE TO FOUNDATION MOVEMENTS

(Normative)

TABLE C1

CLASSIFICATION OF DAMAGE WITH REFERENCE TO WALLS

Description of typical damage and required repair	Approximate crack width limit (see Note 3)	Damage category
Hairline cracks	< 0.1 mm	0
Fine cracks which do not need repair	< 1 mm	1
Cracks noticeable but easily filled. Doors and windows stick slightly	< 5 mm	2
Cracks can be repaired and possibly a small amount of wall will need to be replaced. Doors and windows stick. Service pipes can fracture. Weather tightness often impaired	5 mm to 15 mm (or a number of cracks 3 mm or more in one group)	3
Extensive repair work involving breaking-out and replacing sections of walls, especially over doors and windows. Window and door frames distort. Walls lean or bulge noticeably, some loss of bearing in beams. Service pipes disrupted	15 mm to 25 mm but also depends on number of cracks	4

TABLE C2

CLASSIFICATION OF DAMAGE WITH REFERENCE TO CONCRETE FLOORS

Description of typical damage	Approx. crack width limit in floor	Change in offset from a 3 m straight edge centred over defect (see Note 6)	Damage category
Hairline cracks, insignificant movement of slab from level	< 0.3 mm	< 8 mm	0
Fine but noticeable cracks. Slab reasonably level	< 1.0 mm	< 10 mm	1
Distinct cracks. Slab noticeably curved or changed in level	< 2.0 mm	< 15 mm	2
Wide cracks. Obvious curvature or change in level	2 mm to 4 mm	15 mm to 25 mm	3
Gaps in slab. Disturbing curvature or change in level	4 mm to 10 mm	> 25 mm	4

NOTES:

1 Crack width is the main factor by which damage to walls is categorized. The width may be supplemented by other factors, including serviceability, in assessing category of damage.

2 In assessing the degree of damage, account shall be taken of the location in the building or structure where it occurs, and also of the function of the building or structure.

3 Where the cracking occurs in easily repaired plasterboard or similar clad-framed partitions, the crack width limits may be increased by 50% for each damage category.

4 Local deviation of slope, from the horizontal or vertical, of more than 1/100 will normally be clearly visible. Overall deviations in excess of 1/150 are undesirable.

5 Account should be taken of the past history of damage in order to assess whether it is stable or likely to increase.

6 The straight edge is centred over the defect, usually, and supported at its ends by equal height spacers. The change in offset is then measured relative to this straight edge.

Accessed by SWINBURNE UNIVERSITY OF TECHNOLOGY on 15 Aug 2007

@Seismicisolation

@Seismicisolation

APPENDIX E

STUMP PAD SIZES, BRACED STUMP UPLIFT HORIZONTAL LOAD CAPACITY

(Normative)

E1 GENERAL

Stumps positioned beneath the floor shall be designed for vertical gravity loads, vertical uplift loads and horizontal forces (where applicable). This Appendix is applicable to braced stumps only and is not applicable to bracing stumps.

E2 VERTICAL GRAVITY LOAD CAPACITY

The vertical gravity load capacity shall be calculated by the area of the footing and the assessed bearing capacity. Pad footing systems shall comply with Figure E1. Braced stumps with combined gravity loads (no net uplift) and horizontal loads shall comply with Figure E1 for gravity loads and horizontal design strength from Table E2 or E4 and no allowance need be made for combined effects.

E3 UPLIFT AND HORIZONTAL CAPACITY

The uplift and horizontal design strength of braced stumps shown in Figure E2 shall be determined from Tables E1 to E4. The design action effects U* and H* due to design load for strength shall not exceed the following limits:

$$\frac{U^*}{U} \leq 1.0 \text{ and } \frac{H^*}{H} < 1.0 \text{ for Class A and S sites}$$

$$< 0.9 \quad < 1.0 \text{ for Class M site}$$

$$< 0.7 \quad < 0.8 \text{ for Class H and M-D sites}$$

and for combined uplift and horizontal load,

$$\frac{U^*}{U} + \frac{H^*}{H} < 1.0 \text{ for Class A \& S sites}$$

$$< 0.9 \text{ for Class M sites}$$

$$< 0.7 \text{ for Class M-D and H sites}$$

where

U^*	=	uplift load on stump
H^*	=	design uplift capacity on stump
U	=	$\phi\ U_{ULT}$, geotechnical design strength of stump in uplift, from Figure E2
H	=	$\phi\ H_{ULT}$, geotechnical design strength of stump for horizontal load, from Figure E2
U_{ULT}, H_{ULT}	=	ultimate strength in uplift, horizontal loads and strength reduction factor respectively

For horizontal bracing loads applied higher than shown in Figure E2, capacity shall be determined by engineering principles.

Accessed by SWINBURNE UNIVERSITY OF TECHNOLOGY on 15 Aug 2007

@Seismicisolation

@Seismicisolation

Stump horizontal capacity (see Table E2) is for compacted soil backfill suitable for 100 kPa bearing. For soil with less than 100 kPa lateral allowable bearing pressure the horizontal capacity from Table E2 shall be reduced by multiplying by $\left(\frac{\text{allowable bearing pressure}}{100}\right)$.

The structural strength of the stump and connection to pad for backfilled stumps shall not be less than defined in the design Standard appropriate for the stump material.

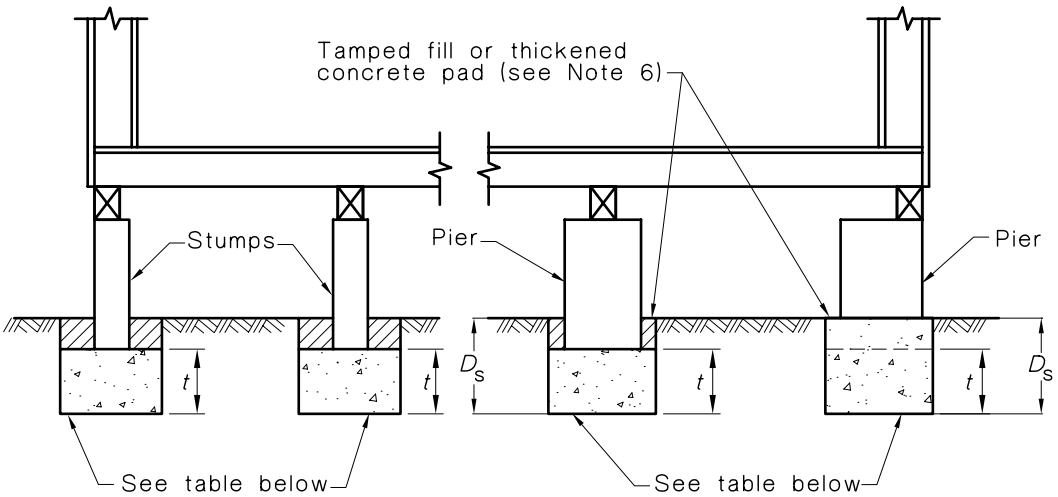

NOTES:

1 Footing sizes that comply with AS 1684 shall be used.

2 Footing sizes for larger loads shall be selected from the following table:

Effective supported area m^2	Width of square pad mm	Diameter of circular pad mm	Thickness (*t*) mm
10	400	500	200
20	500	600	200
40	600	750	250

The effective area supported by a pad footing is the sum of—

(a) the supported floor area;

(b) the supported roof area (if applicable); and

(c) half the supported wall area in elevation (if applicable).

3 The width or diameter may be reduced to one-half the above for footings on rock.

4 The pad footing may be constructed in concrete except that masonry footings can be used under masonry piers.

5 Pad footing sizes shall also apply to footings supporting roof or floor loads only.

6 The excavation shall be backfilled with manually rodded or tamped soil, or the footing thickness shall be increased.

7 Construction details are given in Clause 6.5.

8 The capacity of braced stumps may be used to detail subfloor bracing where no shear walls exist.

FIGURE E1 PAD FOOTING SYSTEM FOR CLAD FRAME, CLASS A, CLASS S, CLASS M AND CLASS H SITES

Accessed by SWINBURNE UNIVERSITY OF TECHNOLOGY on 15 Aug 2007

@Seismicisolation

@Seismicisolation

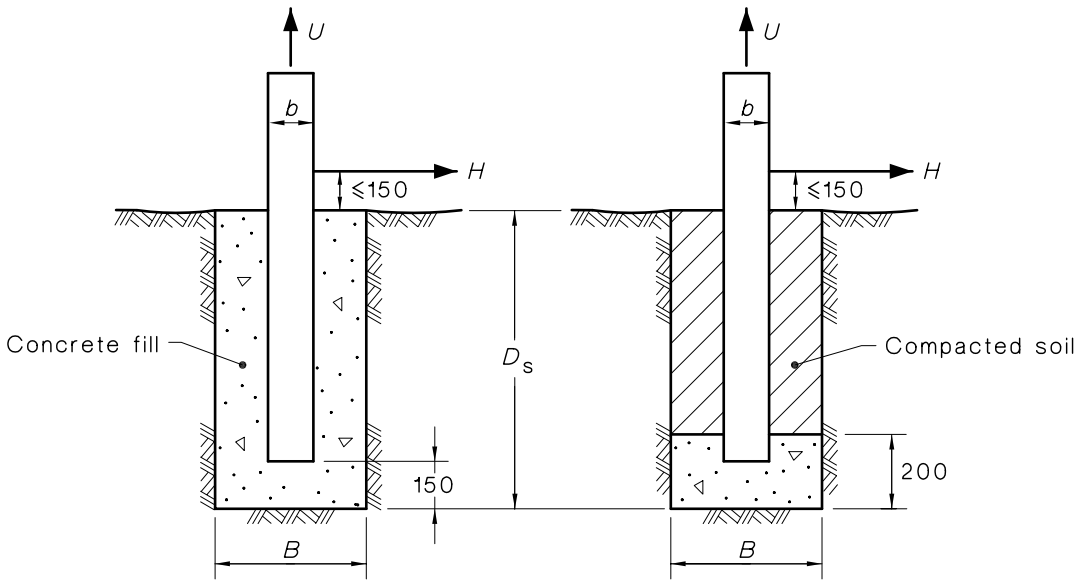

DIMENSIONS IN MILLIMETRES

FIGURE E2 BRACED STUMPS

TABLE E1

SOIL BACKFILL BRACED STUMPS—UPLIFT CAPACITY kN

Stump depth D_s mm	Footing diameter B				
	250	300	350	400	450
400	0.8	1.1	1.3	1.5	1.6
600	2.0	2.4	2.7	3.1	3.6
800	3.8	4.4	5.0	5.6	6.2
1 000	6.5	7.3	8.1	9.0	9.9

TABLE E2

SOIL BACKFILL BRACED STUMPS—HORIZONTAL LOAD CAPACITY kN

Stump depth D_s mm	Stump thickness B, mm			
	100	125	150	200
400	2.2	2.7	3.3	4.4
600	3.6	4.5	5.4	7.2
800	5.1	6.3	7.6	10.1
1 000	6.6	8.2	9.8	13.0

NOTE: Loose sand is not suitable for soil backfilled braced stumps; concrete backfill may be used for braced stumps.

Accessed by SWINBURNE UNIVERSITY OF TECHNOLOGY on 15 Aug 2007

@Seismicisolation

@Seismicisolation

TABLE E3

CONCRETE BACKFILL BRACED STUMPS— UPLIFT CAPACITY kN

Stump depth D_s mm	Footing diameter *B*, mm				
	250	300	350	400	450
400	1.0	1.2	1.5	1.8	2.2
600	2.2	2.6	3.1	3.6	4.2
800	4.1	4.7	5.4	6.2	7.1
1 000	6.8	7.7	8.7	9.8	10.9

TABLE E4

CONCRETE BACKFILL BRACED STUMPS— HORIZONTAL LOAD CAPACITY kN

Stump depth D_s mm	Footing diameter *B*, mm				
	250	300	350	400	450
400	4.0	4.8	5.6	6.4	7.2
600	6.8	8.2	9.5	10.9	12.3
800	9.8	11.7	13.7	15.6	17.6
1 000	12.8	15.3	17.9	20.4	23.0

Accessed by SWINBURNE UNIVERSITY OF TECHNOLOGY on 15 Aug 2007

@Seismicisolation

@Seismicisolation

APPENDIX G

DESIGN OF DRIVEN TIMBER PILED FOOTING SYSTEMS

(Informative)

G1 GENERAL

G1.1 Pile systems

Timber piles should be designed in accordance with this Appendix and the appropriate Sections of AS 2159. Timber piles may be used in pile systems to support all types of framed and masonry construction.

G1.2 Proportions and load capacity of piles

Piles should satisfy the following requirements:

(a) For unspliced piles driven by a drop hammer, the safe working load may be calculated in accordance with:

$$a = 0.001\ bc/s \qquad \text{. . . G1}$$

where

a = safe working load of pile, in kilonewtons

b = drop hammer mass, in kilograms

c = hammer drop height, in millimetres

s = pile set, in millimetres.

NOTE: Set is the average pile penetration per hammer impact, for five hammer impacts.

(b) Where piles are used to replace stumps and pad footings, the required safe working load (kN) of the pile may be back-calculated by multiplying the replaced pad bearing area (m^2) by 100 kPa. For stump pad sizes, reference should be made to AS 1684. Otherwise the required load should be estimated by engineering principles.

(c) For piles driven by methods other than by drop hammer, the allowable load capacity should be determined by engineering principles using AS 2159.

(d) Stresses in timber piles should not exceed the allowable stresses in AS 1720.

NOTE: In some areas, there are large differences in soil strengths between wet and dry periods. In such cases, possible effects on pile capacity should be considered.

G2 PILE SYSTEMS FOR CLASS A AND S SITES

Piles may be used to support framed or masonry construction on Class A and S sites. The minimum driven depth of piles shall be not less than 1 m for these sites and 1 m below the fill for filled sites or to rock.

For the support of external walls, the standard details for the piles and footing beam given in Figure G1 may be adopted. Piles should be located in all corners and steps in beams.

G3 PILE SYSTEMS FOR CLASS M AND H SITES

G3.1 Footing systems

Driven timber piles may be used to support framed or masonry construction on Class M and H sites. Piles should be located in all corners and steps in beams.

Accessed by SWINBURNE UNIVERSITY OF TECHNOLOGY on 15 Aug 2007

@Seismicisolation

@Seismicisolation

G3.2 Load capacity

Piles should comply with the requirements of Paragraph G1.2 for allowable load.

NOTE: Load capacity should be reduced to allow for loss of pile-soil contact due to shrinkage of reactive soils.

G3.3 Minimum depth

The driven depth of the pile needs to be not less than 4/3 H_s for framed or articulated masonry veneer construction and 3/2 H_s for articulated full masonry construction, where H_s is given in Table 2.4.

G3.4 Standard timber pile footing system

The standard pile footing system detail shown in Figure G1 may be used for Classes M and H sites. For Class E sites and full masonry construction, the pile system should be designed by a qualified engineer.

G4 PILE SYSTEMS FOR CLASS P SITES

Driven timber piles may be used to support framed or masonry construction. The piles should be designed by a qualified engineer.

NOTE: Due allowance for down drag should be made in assessing pile capacity.

G5 MATERIAL AND CONSTRUCTION FOR DRIVEN TIMBER PILES

G5.1 General

Driven timber piles of nominal diameter 75 mm to 200 mm used in a footing system should be constructed in accordance with Paragraphs G5.2 and G5.3 below.

G5.2 Material requirements

The material used should be naturally durable or treated timber to have a specified design life. Concrete footing beams should comply with the construction requirements for strip footings in the Standard.

G5.3 Construction requirements

The construction methods should comply with the following:

(a) Pile driving should conform to AS 2159 and a minimum driving mass of 250 kg should be used for drop hammers.

(b) Where steel beams are used to support masonry walls, the underside of the beam should be a minimum height of 100 mm above finished ground level. Continuous flashing should be placed between the beam and brickwork. The subfloor area should be well ventilated.

(c) In areas of high potential termite hazard, the requirements of AS 3660.1 should be taken into consideration as appropriate.

(d) The positional tolerance on piles in AS 2159 does not apply. The position of a pile measured at its cut-off level should be not more than 50% of the pile diameter away from its design position or appropriate to the function of the pile. The vertical tolerances in AS 2159 should apply.

Accessed by SWINBURNE UNIVERSITY OF TECHNOLOGY on 15 Aug 2007

@Seismicisolation

@Seismicisolation

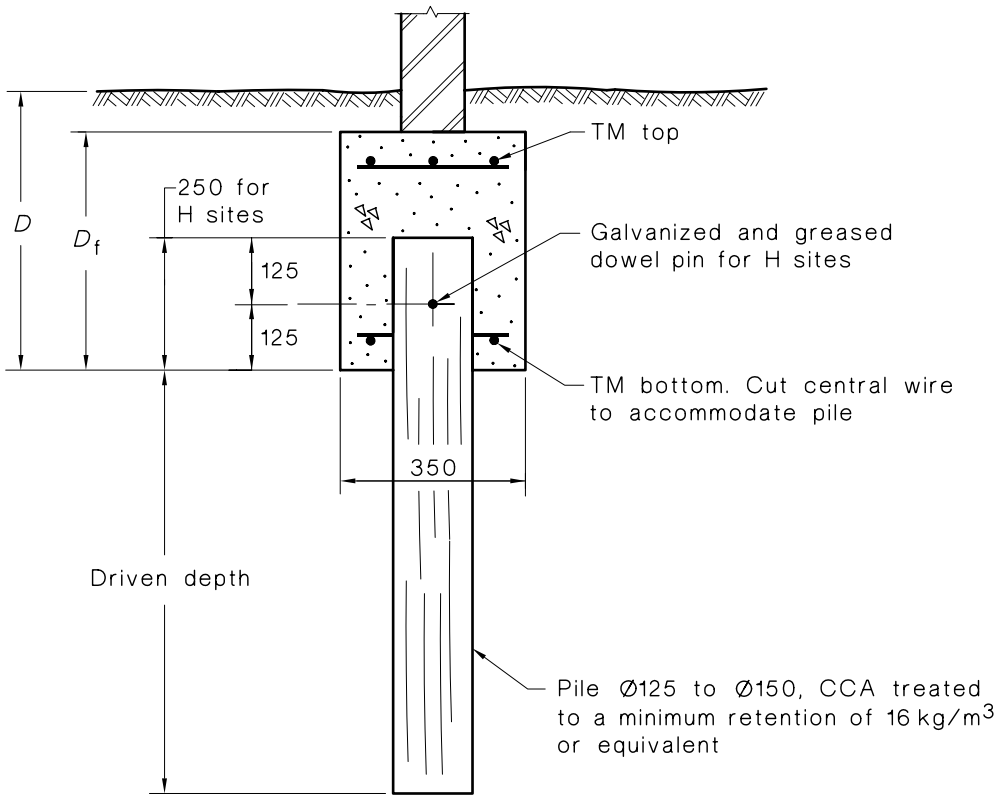

DIMENSIONS IN MILLIMETRES

Footing beam details					Pile details	
Site class	D_f mm	D mm	Trench mesh	Dowel pin diameter × length mm	Minimum driven depth of pile, mm (See Note)	
					Clad frame and masonry veneer	Articulated full masonry
S	400	500	3-L11TM	Not required	1 000	1 500
M	450	500	3-L12TM	Not required	2 000	2 500
H	500	550	3-L12TM	20 × 800	2 500	3 000

Type of construction	Pile spacing, m	
	One-storey	two-storey
Clad frame	3.0	2.5
Masonry veneer	2.1	1.8
Articulated full masonry	1.8	1.5

NOTE: The above information has been based on a safe working load of 60 kN.

FIGURE G1 PROPORTIONS FOR PILED SYSTEMS UNDER PERIMETER WALLS

Accessed by SWINBURNE UNIVERSITY OF TECHNOLOGY on 15 Aug 2007

@Seismicisolation

@Seismicisolation

AMENDMENT CONTROL SHEET

HB 2.2—2003

Amendment No. 2 (2004)

CORRECTION

SUMMARY: This Amendment applies to the Preface, Chapter 3: Tables 2.4, 2.5, and 2.6, Equations 2.4.5, 3.2(5), 3.4(2), 3.6(1), 3.6(4), 4.4(6), 5(15), 5(16) and 8(2), and Clause 4.5.3.1

Published on 23 July 2004.

Accessed by SWINBURNE UNIVERSITY OF TECHNOLOGY on 15 Aug 2007

@Seismicisolation

@Seismicisolation

NOTES

Accessed by SWINBURNE UNIVERSITY OF TECHNOLOGY on 15 Aug 2007

@Seismicisolation

@Seismicisolation

NOTES

Accessed by SWINBURNE UNIVERSITY OF TECHNOLOGY on 15 Aug 2007

@Seismicisolation

@Seismicisolation

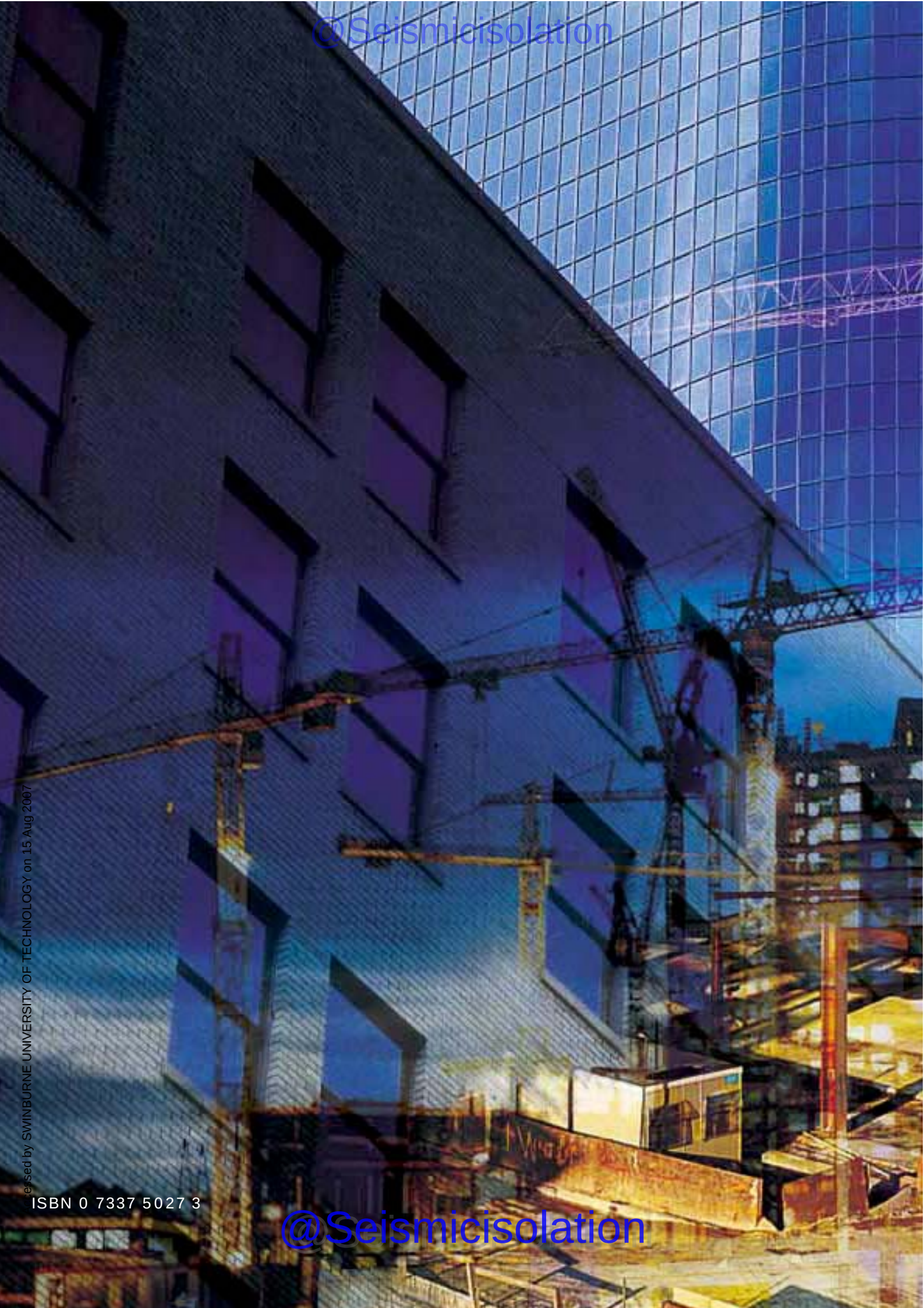

ersed by SWINBURNE UNIVERSITY OF TECHNOLOGY on 15 Aug 2007

ISBN 0 7337 5027 3

@Seismicisolation

@Seismicisolation

This page has been left blank intentionally.

Accessed by SWINBURNE UNIVERSITY OF TECHNOLOGY on 15 Aug 2007

@Seismicisolation