@Seismicisolation

CIDECT

CONSTRUCTION WITH HOLLOW STEEL SECTIONS 5

DESIGN GUIDE

FOR CONCRETE FILLED HOLLOW SECTION COLUMNS UNDER STATIC AND SEISMIC LOADING

R. Bergmann, C. Matsui, C. Meinsma, D. Dutta

Verlag TÜV Rheinland

@Seismicisolation

@Seismicisolation

DESIGN GUIDE

FOR CONCRETE FILLED HOLLOW SECTION COLUMNS UNDER STATIC AND SEISMIC LOADING

@Seismicisolation

@Seismicisolation

CONSTRUCTION WITH HOLLOW STEEL SECTIONS

Edited by: Comité International pour le Développement et l'Etude de la Construction Tubulaire

Authors: Bergmann, Reinhard, Ruhr-University of Bochum, Germany
Matsui, Chiaki, Kyushu University, Fukuoka, Japan
Meinsma, Christoph, Ruhr-University of Bochum, Germany
Dutta, Dipak, Technical Commission of Cidect

@Seismicisolation

@Seismicisolation

DESIGN GUIDE

FOR CONCRETE FILLED HOLLOW SECTION COLUMNS UNDER STATIC AND SEISMIC LOADING

R. Bergmann, C. Matsui, C. Meinsma, D. Dutta

Verlag TÜV Rheinland

@Seismicisolation

@Seismicisolation

Cover photo:
Concrete filled circular hollow section columns of the new office building of Deutsche Bundespost in Saarbrücken, Germany

Die Deutsche Bibliothek – CIP-Einheitsaufnahme

Design guide for concrete filled hollow section columns under static and seismic loading / CIDECT. R. Bergmann . . . – Köln: Verl. TÜV Rheinland, 1995
(Construction with hollow steel sections)
ISBN 3-8249-0298-2
NE: Bergmann, Reinhard; Comité International pour le Développement et l'Etude de la Construction Tubulaire

ISBN 3-8249-0298-2

© by Verlag TÜV Rheinland GmbH, Köln 1995
Entirely made by: Verlag TÜV Rheinland GmbH, Köln
Printed in Germany 1995

@Seismicisolation

@Seismicisolation

Preface

Composite columns of steel and concrete, especially in steel hollow sections filled with concrete, manifest a number of major architectural, structural and economic advantages, which are very much appreciated by the modern designers and the building engineers. They have been used in the structural buildings for quite a few decades, although their application has increased substantially in the recent time. Some of these qualitative aspects leading to special preferences by the architects and structural people are listed below:

- The concrete filling lends to the steel hollow sections a still higher rigidity and load bearing strength, so that the aesthetic slender columns can bear higher loads without increasing the external dimensions. This can be more enhanced by means of reinforcing bars.
- The steel structure is visible and transparent. The visible steel allows a pretentious architectural design with various colourings. The painting costs as well as the costs for corrosion protection, e.g. spray, paints etc., are low due to small external surface area of the columns.
- Hollow section acts as casting as well as reinforcement for the concrete. No additional concrete casting is required.
- The concrete filling of the hollow section does not require special equipment other than for usual concreting jobs.
- The hardening of concrete does not prevent the building progress. The time for assembly and erection is short without any delay.
- The concrete core increases the fire resistance time of a hollow section column. With corresponding percentage of reinforcement, concrete filled hollow section columns can reach more than 90 minutes fire resistance time. No external fire protection for the section is necessary in this case.
- There is seldom any problem with respect to the joints due to the highly developed assembly technique in structural engineering today. This permits prefabrication in workshop and a quick and dry assembly on site.

In the late sixties CIDECT started its research works to determine the design methods for hollow section composite columns and the first monograph with design diagrams was published in 1970 [1] making this type of application more convenient to the constructors and fabricators. Further research works by CIDECT on this subject resulted in the monograph no. 5 [2], which is an extensive modification of the monograph no. 1. These documents have helped substantially during the european harmonization of national standards and recommendations to formulate Eurocode 4 “Design of Composite Steel and Concrete Structures, Part 1-1: General rules and rules for buildings” [4], a part of which is devoted to the hollow section composite columns.

Besides the subject of the load bearing strength under static loading, this handbook also deals with the seismically loaded hollow section composite columns, although not as elaborately as with the static loading. This addition has been found necessary due to the extraordinary earthquake resistance of the concrete filled hollow section columns, which were demonstrated during the South Hyogo earthquake on January 11, 1995 in Japan.

This handbook is the fifth in the CIDECT series “Construction with Hollow Steel Sections”, which CIDECT has been publishing since 1991 in English, French and German languages:

- Design guide for circular hollow section (CHS) joints under predominantly static loading (already published)
- Structural stability of hollow sections (already published)
- Design guide for rectangular hollow section (RHS) joints under predominantly static loading (already published)
- Design guide for structural hollow section columns exposed to fire (already published)
- Design guide for concrete filled hollow section columns under static and seismic loading
- Design guide for structural hollow sections for mechanical applications (in preparation)

@Seismicisolation

@Seismicisolation

– Design guide for circular and rectangular hollow section joints under fatigue loading (in preparation)

By means of these design guides CIDECT likes to inform and enlighten the architects, constructors and designers as well as the professors and students of the technical universities and engineering schools about the latest developments of design and construction with hollow sections.

We are thankful to the two well known experts in the field of composite structures – Dr. Reinhard Bergmann, Ruhr-University Bochum, Germany, and Prof. Chiaki Matsui, Kyushu University, Fukuoka, Japan, – whose collaboration made this design guide possible. Further, we acknowledge gratefully the support of the CIDECT member firms.

Dipak Dutta
Technical Commission
CIDECT

@Seismicisolation

@Seismicisolation

Contents

Preface

1 Introduction . . . 9
1.1 General . . . 9
1.2 Design methods . . . 9

2 Design method according to Eurocode 4 . . . 12
2.1 General design method . . . 12
2.2 Material properties . . . 12

3 Simplified design method . . . 15
3.1 General and scope . . . 15
3.2 Local buckling . . . 15
3.3 Resistance of a section to axial loads . . . 16
3.4 Resistance of a member to axial loads . . . 19
3.5 Resistance of a section to bending . . . 23
3.6 Resistance of a section to bending and compression . . . 26
3.7 Influence of shear forces . . . 35
3.8 Resistance of a member to bending and compression . . . 37
3.8.1 Uniaxial bending and compression . . . 37
3.8.2 Biaxial bending and compression . . . 40
3.9 Determination of bending moments . . . 41
3.9.1 General . . . 41
3.9.2 Exact determination of bending moments . . . 41
3.9.3 Simplified method for the determination of bending moments . . . 44

4 Shear and load introduction . . . 45
4.1 General and limit values . . . 45
4.2 Distribution of the internal forces and moments . . . 45
4.3 Regions of load introduction . . . 47

5 Special problems . . . 51
5.1 Mono-symmetrical sections . . . 51
5.2 Preloaded steel columns . . . 51
5.3 Partially filled columns . . . 51
5.4 Special concrete . . . 53

6 Design for seismic conditions . . . 54

7 References . . . 56

8 Design examples . . . 57
8.1 Concrete filled circular hollow section with reinforcement . . . 57
8.2 Concrete filled rectangular hollow section with eccentric loading . . . 58

9 Notations . . . 64

CIDECT International Committee for the Development and Study of Tubular Structures . . . 66

@Seismicisolation

@Seismicisolation

Concrete filling procedure of structural hollow section columns on site.

@Seismicisolation

@Seismicisolation

1 Introduction

1.1 General

Composite columns are a combination of concrete and steel columns combining the advantages of both types of columns. The composite column has a higher ductility than the concrete column and connections may be constructed following the experience of steel constructions. The concrete filling not only leads to a bearing capacity which is much higher than that of steel columns but it also promotes the resistance against fire.
As far as the ductility and the rotation capacity are concerned, concrete filled steel hollow section columns show the best behaviour compared to other types of composite columns. The concrete is held by the steel profile and cannot split away even if the ultimate concrete strength is reached.
The research work in the field of composite columns with concrete filled hollow sections has a long tradition in the history of CIDECT. The CIDECT-Monograph No. 1 [1], which was already published in 1970, gives design recommendations for such columns. Further research led to the CIDECT-Monograph No. 5 [2], which gives design charts for concrete filled hollow sections. These calculation methods were based on the evaluation of the tests carried out in the institutes in various parts of the world.

1.2 Design methods

Several design methods for composite columns have been developed in different countries and some are under development now. In Japan the design of composite columns is standardized by [7]. The design of composite columns may be carried out either by a superposition method or by treating the structural steel as a strong reinforcement and following the design procedure for reinforced concrete structures. Both methods are based on allowable stress design. Fig. 1 shows the cross section types, which are covered by the Japanese standard [7]. The design method according to EC4 [4] is, however, not compatible with the existing Japanese design method, which is based on a summation of separate strengths of the material components.
For such a superimposition design method the capacities of the steel and the concrete part of a section have to be determined separately and then added to each other resulting in a combined capacity. No composite action is considered.
The design for earthquake is one of the most important design situations in Japan. The large horizontal forces, which have to be assumed for seismic design, mostly incorporate the danger of longitudinal buckling of the column. A minimum eccentricity of 5% of the depth of the section has to be assumed also for normal design conditions. Creep and shrinkage are taken into consideration by reducing the allowable stresses in the concrete. Different strengths are given for concrete inside and outside of a tube. The Japanese design method also includes the design for non-symmetrical column sections.
The Canadian method for the design of composite columns [8] is based on ultimate limit state. It is also a superposition method, where the capacity of the structural steel is added to that of the concrete section. Triaxial effects of the confined concrete in circular hollow sections are taken into account. Creep and shrinkage are considered by a reduction of the concrete modulus similar to that given in Eurocode 4. If a member is required to resist both bending moments and axial compression, the bending may be assumed to be resisted by either the composite section or the steel section alone.
In Australia the design method for composite columns is still under discussion. The publications on this subject [9] indicate that it will be very similar to the Eurocode 4 method. Some rules are nearly the same as in EC4 and some do not go as far in the direction of

@Seismicisolation

@Seismicisolation

simplification as EC4. As the Australian design method for steel structures uses different Column Curves than the European ones, it might be that these curves will also be the basis for the design of composite columns. Fig. 2 shows the comparison of the Australian buckling curve for hollow sections according to [12] with the European buckling curve a, which has to be taken for hollow sections, concrete filled or unfilled. The Australian design rules for composite columns are expected to be completed and published at the end of 1995.

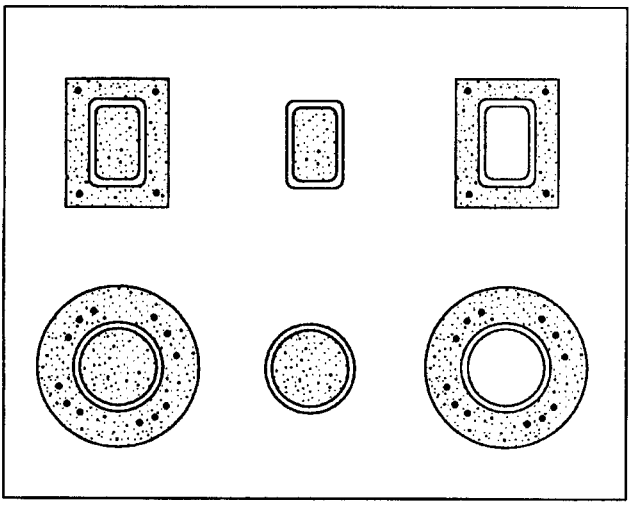

Fig. 1 – Composite steel and concrete sections covered by [7].

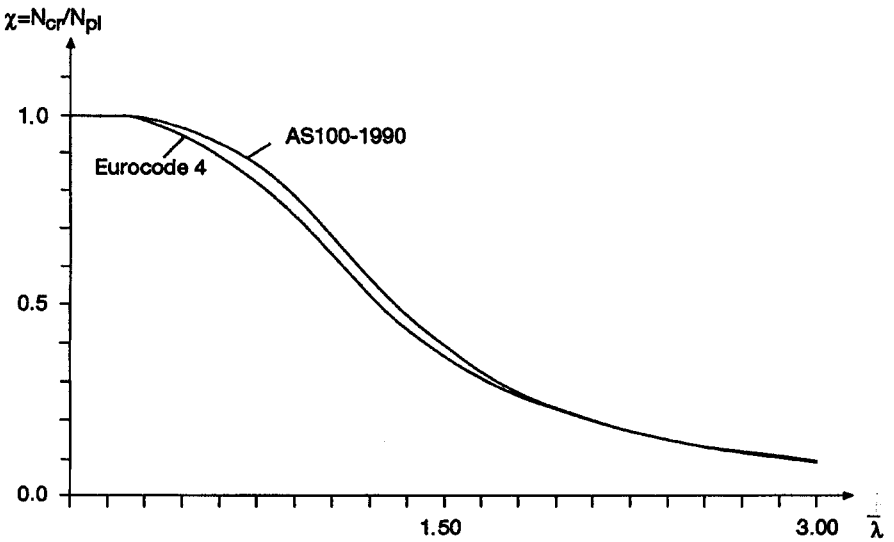

Fig. 2 – Comparison of the Australian and the European column curve "a".

@Seismicisolation

@Seismicisolation

In Europe the buckling curves for the design of steel columns were developed in the seventies. Later on they were called European buckling curves because of the great acceptance in the countries of Europe. The design method based on these curves is an ultimate limit state design. The aim of the research on composite columns was to obtain a similar design method. So the numerous tests on composite columns were re-evaluated and an extensive theoretical and practical investigation was performed. As a result, a design method for composite columns was made on the basis of the European buckling curves also using the interaction curves of the sections for the determination of the resistance. This design method was introduced in the Eurocode 4 [4], which contains the European regulations for the design of composite constructions.
This CIDECT Design Guide describes the relevant parts of Eurocode 4 concerning the regulations for composite columns with concrete filled circular, square or rectangular hollow sections. Background information is given for some regulations and the examples show the application of the Eurocode 4.
This design guide does not deal with the regulations for the design under fire loading. This part has been treated in a separate CIDECT Design Guide [3].

@Seismicisolation

@Seismicisolation

2 Design method according to Eurocode 4

2.1 General design method

The design of composite columns has to be carried out for the ultimate limit state. Under the most unfavourable combination of actions, the design has to show that the resistance of the section is not exceeded and that overall stability is ensured.
The analysis of the load bearing capacity shall include imperfections, the influence of deflections on the equilibrium (second order theory) and the loss of stiffness if parts of the section become plastic (partially plastic regions). For concrete, the stress-strain relationship shall follow a parabolic rectangular curve, whereas for structural and reinforcing steel, a bilinear curve is valid.
An exact calculation of the ultimate load of a composite column following all these requirements can only be carried out by means of a computer program (FEM) [6] and is not economical for the practical engineer. Therefore those computer programs should be used in addition to tests to develop a simplified design method.
The design has to fulfil eqn. 1, where S_d is the combination of actions including the load factors γ_F and R_d is the combination of the resistances depending on the different partial safety factors for the materials γ_M.

$$S_d \leq R_d = R\left(\frac{f_y}{\gamma_{Ma}}, \frac{f_{ck}}{\gamma_c}, \frac{f_{sk}}{\gamma_s}\right) \tag{1}$$

Eurocode 3 uses an additional system safety factor in order to cover failure by stability reason, which is applied to the complete resistance side of eqn. 1. For composite columns this additional safety factor is only applied to the steel part of the section (γ_{Ma}). So for composite columns which are endangered to fail by buckling, the steel strength has to be divided by γ_{Ma}, alternatively by γ_a according to table 1. The system factor γ_{Ma} may be taken higher than γ_a. Danger of stability failure may be considered as excluded if the columns are compact, that means the relative slenderness $\bar{\lambda}$ does not exceed 0.2, or if the design normal force is very small, i. e. not greater than 0.1 N_{cr} (for $\bar{\lambda}$ and N_{cr}, see chapter 3.4).
The safety factors in the current edition of Eurocode 4 [4] are boxed values, which expresses that these values are recommended values which could be changed by national application documents. The recommendation for γ_{Ma} is the same as for γ_a (table 1).

Table 1 – Partial safety factors for resistances and material properties for fundamental combinations.

structural steel	concrete	reinforcement
$\gamma_a = 1.1$	$\gamma_c = 1.5$	$\gamma_s = 1.15$

The safety factors for the actions γ_F have to be chosen according to Eurocode 1 or national codes respectively. These values as well as the material factors for other than normal conditions are not treated here. If the material factors given in table 1 are modified, they are described in the relevant following clauses.

2.2 Material properties

For composite columns the materials may be used, which are included in Eurocode 2 (concrete structures) and Eurocode 3 (steel structures) respectively. Detailed informations about the material properties are given in these codes.

@Seismicisolation

@Seismicisolation

Table 2 shows the strength classes of concrete, which may be used for composite constructions. Classes higher than C50/60 should not be used without further investigation. Classes lower than C20/25 are not allowed for composite constructions.

Table 2 – Strength classes of concrete, characteristic cylinder strength and modulus of elasticity for normal weight concrete

strength class of concrete $f_{ck.cyl}/f_{ck.cub}$	C20/25	C25/30	C30/37	C35/45	C40/50	C45/55	C50/60
cylinder strength f_{ck} [N/mm^2]	20	25	30	35	40	45	50
secant modulus of elasticity E_{cm} [N/mm^2]	29 000	30 500	32 000	33 500	35 000	36 000	37 000

Introducing reinforcement bars before concrete filling (especially increasing the fire resistance time).

@Seismicisolation

@Seismicisolation

In order to consider the influence of long time acting loads (not creep and shrinkage), the concrete strength is reduced by the factor 0.85. For composite columns with concrete filled hollow sections, this value need not be taken into account, because a more favourable development of concrete strength is achieved in the steel tube and because peeling off of the concrete is impossible. In the following text this factor will not be mentioned any more. The influence of creep and shrinkage on the load bearing capacity has only to be considered if significant. This will be treated in the simplified design method given in chapter 3.
For the reinforcing steel, the regulations of Eurocode 2 are valid. Most of the reinforcing steel grades are characterized by their names, e.g. the name gives the value of the nominal strength. A very common reinforcing steel is the grade S500 with a nominal strength of 500 N/mm^2. In Eurocode 2 the modulus of elasticity for the reinforcement is given by E_s = 200 000 N/mm^2. For the sake of simple calculation, the same modulus of elasticity for the reinforcing steel may be taken as for structural steel in composite construction: $E_s = E_a$ = 210 000 N/mm^2.
For the structural steel of composite sections, the common steel grades are given in table 3. The sections may be hot rolled or cold formed. The values of table 3 are valid for material thicknesses not higher than 40 mm. For material thicknesses between 40 mm and 100 mm the strengths have to be reduced. High strength steel may be used, if the relevant requirements for the ductility are observed as given in Eurocode 3 [13].

Table 3 – Nominal (characteristic) values of yield strengths and modulus of elasticity for structural steel

steel grades		Fe235	Fe275	Fe355	Fe460
yield strength f_y	[N/mm^2]	235	275	355	460
modulus of elasticity E_a	[N/mm^2]	210 000			

For structural steel and for reinforcing steel the nominal strength may be taken as the characteristic strength. The design strengths of the materials are obtained by using the partial safety factors given in table 1.

$f_{cd} = f_{ck} / \gamma_c$ for concrete (2)

$f_{sd} = f_{sk} / \gamma_s$ for reinforcement (3)

$f_{yd} = f_y / \gamma_{Ma}$ for structural steel (4)

@Seismicisolation

@Seismicisolation

3 Simplified design method

3.1 General and scope

Eurocode 4 gives a simplified design method for composite columns, which is applicable for practical purposes. This design method considers the general requirements mentioned above. It is based on the European buckling curves for the influence of instability and on cross section interaction curves determining the resistance of a section. The change in stiffness of a member due to plastification in the structural steel and cracks in the concrete in tension are also taken into account. The application of this design method is limited to a slenderness ratio of $\bar{\lambda} \leq 2.0$ (for $\bar{\lambda}$, see chapter 3.4). The description of this method is given in the sequence, which a designer would follow normally.
Figure 1 shows typical concrete filled cross sections with notations. The section in fig. 3a shall represent all rectangular and square sections.

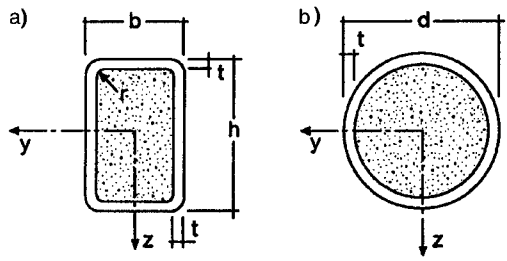

Fig. 3 – Concrete filled hollow sections with notations.

3.2 Local buckling

In the ultimate limit state the attainment of material strength is assumed for all parts of the section. It must be ensured that this is possible without previous failure by instability of thin cross-section parts. This can be checked by maintaining a certain limit ratio of depth to thickness for the section. With the notations in fig. 3 the following limit ratios shall be observed for bending and compression.

– for concrete filled rectangular hollow sections (fig. 3a)
  (h being the greater overall dimension of the section)
  $h/t \leq 52\,\varepsilon$ (5)
– for concrete filled circular hollow sections (fig. 3b)
  $d/t \leq 90\,\varepsilon^2$ (6)

The factor ε accounts for different yield limits.

$$\varepsilon = \sqrt{\frac{235\ \mathrm{N/mm^2}}{f_y}} \qquad (7)$$

with f_y in $\mathrm{N/mm^2}$ units.

Table 4 – Limit ratios of wall dimension to wall thickness for which local buckling is prevented

steel grade		Fe235	Fe275	Fe355	Fe460
circular hollow sections	lim d/t	90	77	60	46
rectangular hollow sections	lim h/t	52	48	42	37

@Seismicisolation

@Seismicisolation

For the structural steel grades given in table 3, the limit values for d/t or h/t are shown in table 4. These values consider that the buckling of the walls of concrete filled sections is only possible in the outer direction. Compared with pure steel sections [5], a better behaviour concerning buckling can be achieved. The limits shown in table 4 are found on the basis of classifying the concrete filled sections in the class 2. The classification in class 2 means that the internal forces are determined by following elastic analysis and are compared to the plastic resistance of the section. Class 2 sections are assumed to have limited rotation capacity, so that plastic analysis is not allowed, which takes moment redistribution by plastic hinges into account. Detailed information is given in [5].

3.3 Resistance of a section to axial loads

The plastic resistance of the cross section of a composite column is given by the sum of the components:

$$N_{pl.Rd} = A_a f_{yd} + A_c f_{cd} + A_s f_{sd} \tag{8}$$

where

A_a, A_c and A_s are the cross sectional areas of the structural steel, the concrete and the reinforcement,

f_{yd}, f_{cd} and f_{sd} are the design strengths of the materials mentioned above.

Fig. 4 shows the stress distribution, on which eqn. 8 is based.

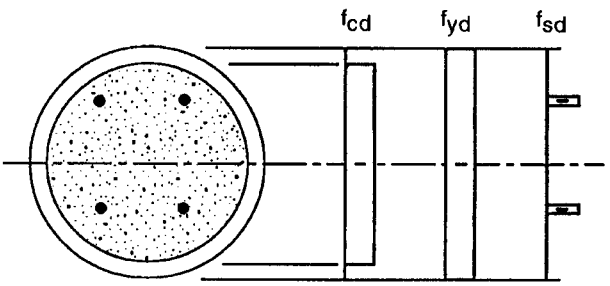

Fig. 4 – Stress distribution for the plastic resistance of a section

The ratio of reinforcement is limited to $\rho = 4\%$ of the concrete section. More reinforcement may be necessary for the design against fire, but shall not be taken into account for the design using the simplified method of Eurocode 4. No minimum reinforcement is necessary for concrete filled sections; but if reinforcement shall participate in the load bearing capacity, the minimum amount of reinforcement has to be $\rho = 0.3\%$.
As a proportion of $N_{pl.Rd}$ the cross section parameter δ may be determined:

$$\delta = \frac{A_a f_{yd}}{N_{pl.Rd}} \tag{9}$$

Here $N_{pl.Rd}$ and f_{yd} are to be determined taking $\gamma_{Ma} = \gamma_a$.

This value has to fulfil the following requirement:

$$0.2 \leq \delta \leq 0.9 \tag{10}$$

This check defines the composite column. If the parameter δ is less than 0.2, the column shall be designed following Eurocode 2 [14]; on the other hand when δ is greater than 0.9, the column shall be designed as a steel column according to Eurocode 3 [13].

@Seismicisolation

@Seismicisolation

For concrete filled circular hollow sections the load bearing capacity of the concrete is increased due to the impeded transverse strain. This effect is shown in fig. 5. Transverse compression of the concrete (σ_r) leads to three-dimensional effects, which increase the resistance for normal stresses σ_c. At the same time, circular tensile stresses result in the round section (σ_φ) reducing its normal stress capacity.

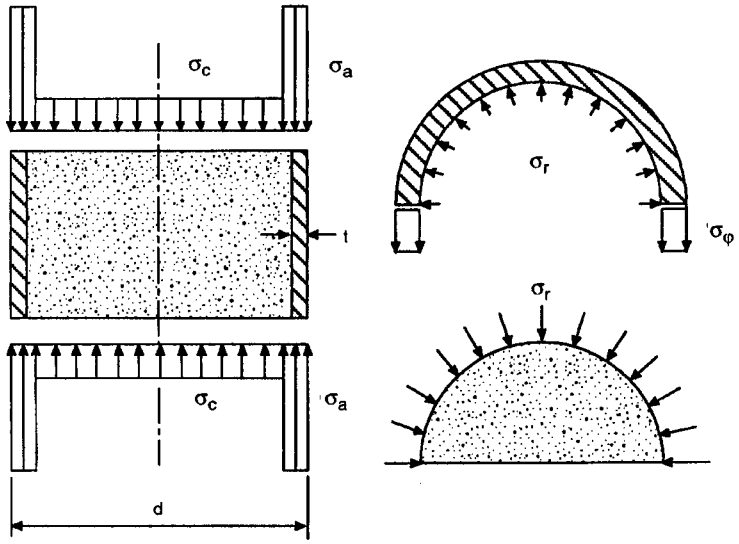

Fig. 5 – Model for the stresses in concrete filled circular tubes

The effect of confinement for circular hollow sections may be considered by transforming eqn. 8 to eqn. 11, where the concrete component is increased while the steel component decreases:

$$N_{pl.Rd} = A_a\, f_{yd}\, \eta_2 + A_c\, f_{cd} \left(1 + \eta_1 \frac{t}{d} \frac{f_y}{f_{ck}} \right) + A_s\, f_{sd} \tag{11}$$

where

t is the wall thickness of the circular hollow section.

By means of the values

$$\eta_1 = \eta_{10} \left(1 - \frac{10\, e}{d} \right) \tag{12}$$

$$\eta_2 = \eta_{20} + (1 - \eta_{20}) \frac{10\, e}{d} \tag{13}$$

a linear interpolation is carried out for load eccentricities $e \leq d/10$ with the basic values η_{10} and η_{20}, which depend on the relative slenderness $\bar{\lambda}$:

$$\eta_{10} = 4.9 - 18.5\, \bar{\lambda} + 17\, \bar{\lambda}^2 \qquad (\text{but } \eta_{10} \geq 0.0) \tag{14}$$

$$\eta_{20} = 0.25 \left(3 + 2\bar{\lambda} \right) \qquad (\text{but } \eta_{20} \leq 1.0) \tag{15}$$

@Seismicisolation

@Seismicisolation

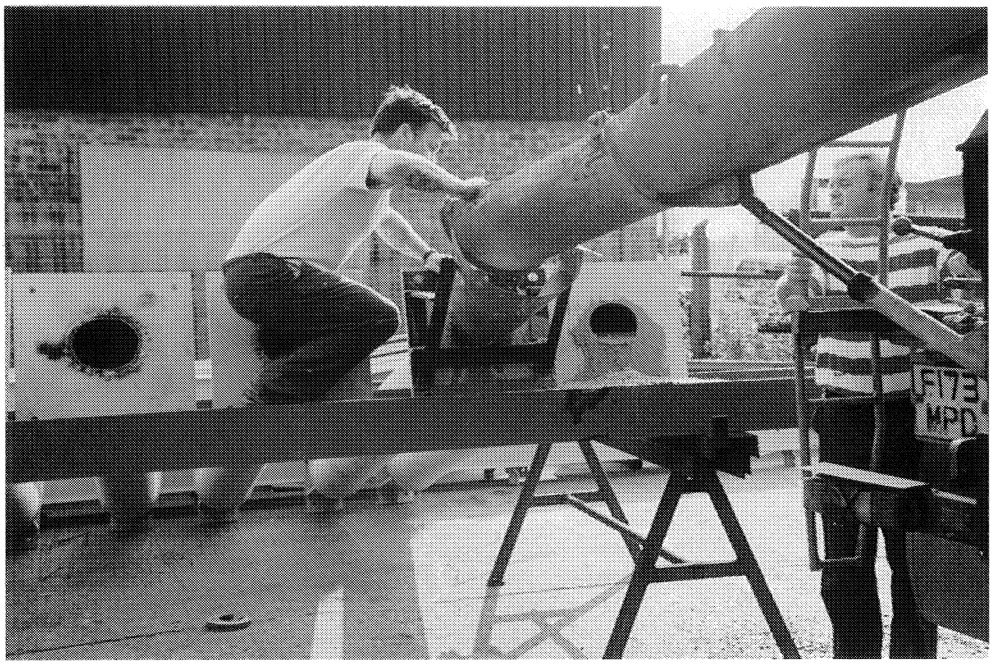

Concrete filling of circular hollow section columns. For uniform concrete filling, the columns are held inclined.

@Seismicisolation

@Seismicisolation

Table 5 gives the basic values η_{10} and η_{20} for different values of $\bar{\lambda}$.

Table 5 – Basic values η_{10} and η_{20} considering the effect of confinement for concrete filled circular hollow sections

$\bar{\lambda}$	0.0	0.1	0.2	0.3	0.4	0.5
η_{10}	4.90	3.22	1.88	0.88	0.22	0.00
η_{20}	0.75	0.80	0.85	0.90	0.95	1.00

The effect of confinement may only be considered for compact columns up to a relative slenderness of $\bar{\lambda} \leq 0.5$. In addition, the eccentricity of the normal force e shall not exceed the value d/10, d being the outer dimension of the tube. If the eccentricity e exceeds the value d/10 or if the relative slenderness $\bar{\lambda}$ exceeds the value 0.5, $\eta_1 = 0.0$ and $\eta_2 = 1.0$ must be applied.

The eccentricity e is defined by:

$$e = \frac{M_{max.Sd}}{N_{Sd}} \tag{16}$$

where

$M_{max.Sd}$ is the maximum design moment due to the loads according to 1st order theory and

N_{Sd} is the design normal force

The slenderness ratio $\bar{\lambda}$, necessary for the values η_{10} and η_{20}, has to be determined according to eqn. 20. It depends on the resistance $N_{pl.R}$, which, on the other hand, is calculated using the factors η and eqn. 11. In order to avoid an iterative process, the slenderness ratio $\bar{\lambda}$ should be determined following eqn. 8.
The application of the eqns. 11 to 15 and its relation to eqn. 8 is shown in table 6. For certain ratios of steel to concrete strengths, selected values for $\bar{\lambda}$ as well as for certain ratios of e/d and d/t, the respective calculative increase caused by confinement effects is given. For the calculation, the longitudinal reinforcement is assumed to be 4% with a yield strength of 500 N/mm^2. It must be recognized that for higher slendernesses and larger eccentricities, the advantage is very low, so that it is not worth carrying out the calculation considering the effect of confinement. Only for the values of $\bar{\lambda}$ less than 0.2 and the eccentricity ratios e/d less than 0.05, a significant increase is obtained.

3.4 Resistance of a member to axial loads

The basis of design for the resistance of a member to axial loads is the European buckling curve "a". A reduction factor χ depending on the slenderness ratio $\bar{\lambda}$ determines the capacity of a member against axial loads.
For each of the two main axes of the section it has to be shown that the design normal force does not exceed the normal force resistance of a member.

$$N_{Sd} \leq \chi \, N_{pl.Rd} \tag{17}$$

where

$N_{pl.Rd}$ is the resistance of the section against normal force according to eqns. 8 or 11, and

χ is the reduction factor for the buckling curve "a"

@Seismicisolation

@Seismicisolation

Table 6 – Increase in resistance to axial loads for different ratios of d/t, f_y/f_{ck} and selected values for e/d and $\bar{\lambda}$ due to confinement.

		d/t = 40			d/t = 60			d/t = 80		
		f_y/f_{ck}			f_y/f_{ck}			f_y/f_{ck}		
$\bar{\lambda}$	e/d	5	10	15	5	10	15	5	10	15
0.0	0.00	1.152	1.238	1.294	1.114	1.190	1.244	1.090	1.157	1.207
	0.01	1.137	1.215	1.264	1.102	1.171	1.220	1.081	1.141	1.186
	0.02	1.122	1.191	1.235	1.091	1.152	1.195	1.072	1.125	1.166
	0.03	1.107	1.167	1.206	1.080	1.133	1.171	1.063	1.110	1.145
	0.04	1.091	1.143	1.176	1.068	1.114	1.146	1.054	1.094	1.124
	0.05	1.076	1.119	1.147	1.057	1.095	1.122	1.045	1.078	1.103
	0.06	1.061	1.095	1.118	1.045	1.076	1.098	1.036	1.063	1.083
	0.07	1.046	1.072	1.088	1.034	1.057	1.073	1.027	1.047	1.062
	0.08	1.030	1.048	1.059	1.023	1.038	1.049	1.018	1.031	1.041
	0.09	1.015	1.024	1.029	1.011	1.019	1.024	1.009	1.016	1.021
0.2	0.00	1.048	1.075	1.093	1.036	1.060	1.078	1.029	1.050	1.066
	0.01	1.043	1.068	1.083	1.033	1.054	1.070	1.026	1.045	1.060
	0.02	1.038	1.060	1.074	1.029	1.048	1.062	1.023	1.040	1.053
	0.03	1.034	1.053	1.065	1.025	1.042	1.054	1.020	1.035	1.046
	0.04	1.029	1.045	1.056	1.022	1.036	1.047	1.017	1.030	1.040
	0.05	1.024	1.038	1.046	1.018	1.030	1.039	1.014	1.025	1.033
	0.06	1.019	1.030	1.037	1.014	1.024	1.031	1.012	1.020	1.026
	0.07	1.014	1.023	1.028	1.011	1.018	1.023	1.009	1.015	1.020
	0.08	1.010	1.015	1.019	1.007	1.012	1.016	1.006	1.010	1.013
	0.09	1.005	1.008	1.009	1.004	1.006	1.008	1.003	1.005	1.007
0.4	0.00	1.005	1.008	1.010	1.004	1.007	1.009	1.003	1.006	1.008
	0.01	1.005	1.007	1.009	1.004	1.006	1.008	1.003	1.005	1.007
	0.02	1.004	1.006	1.008	1.003	1.005	1.007	1.003	1.005	1.006
	0.03	1.004	1.006	1.007	1.003	1.005	1.006	1.002	1.004	1.005
	0.04	1.003	1.005	1.006	1.002	1.004	1.005	1.002	1.003	1.005
	0.05	1.003	1.004	1.005	1.002	1.003	1.004	1.002	1.003	1.004
	0.06	1.002	1.003	1.004	1.002	1.003	1.003	1.001	1.002	1.003
	0.07	1.002	1.002	1.003	1.001	1.002	1.003	1.001	1.002	1.002
	0.08	1.001	1.002	1.002	1.001	1.001	1.002	1.001	1.001	1.002
	0.09	1.001	1.001	1.001	1.000	1.001	1.001	1.000	1.001	1.001

The values of χ may be determined analytically by means of eqn. 18 or by an interpolation based on table 7.

$$\chi = \frac{1}{\Phi + \sqrt{\Phi^2 - \bar{\lambda}^2}} \tag{18}$$

with

$$\Phi = 0.5\left[1 + 0.21\left(\bar{\lambda} - 0.2\right) + \bar{\lambda}^2\right] \tag{19}$$

The relative slenderness $\bar{\lambda}$ is obtained by:

$$\bar{\lambda} = \sqrt{\frac{N_{pl.R}}{N_{cr}}} \tag{20}$$

@Seismicisolation

@Seismicisolation

where

$N_{pl.R}$ is the resistance of the section to axial loads $N_{pl.Rd}$ with $\gamma_a = \gamma_c = \gamma_s = 1.0$ and

N_{cr} is the elastic buckling load of the member (Euler critical load).

$$N_{cr} = \frac{(EI)_e \, \pi^2}{\ell^2} \tag{21}$$

where

ℓ is the buckling length of the column and

$(EI)_e$ is the effective stiffness of the composite section.

The buckling (effective) length of the column can be determined by using the methods shown in literature or following the rules of Eurocode 3. For columns in non-sway systems, the column length may be taken as the buckling length. This lies on the safe side of design.

Table 7 – Reduction factor χ for the European buckling curve "a"

$\bar{\lambda}$	0.00	0.01	0.02	0.03	0.04	0.05	0.06	0.07	0.08	0.09
0.0	1.000	1.000	1.000	1.000	1.000	1.000	1.000	1.000	1.000	1.000
0.1	1.000	1.000	1.000	1.000	1.000	1.000	1.000	1.000	1.000	1.000
0.2	1.000	0.998	0.996	0.993	0.991	0.989	0.987	0.984	0.982	0.980
0.3	0.977	0.975	0.973	0.970	0.968	0.966	0.963	0.961	0.958	0.955
0.4	0.953	0.950	0.947	0.945	0.942	0.939	0.936	0.933	0.930	0.927
0.5	0.924	0.921	0.918	0.915	0.911	0.908	0.905	0.901	0.897	0.894
0.6	0.890	0.886	0.882	0.878	0.874	0.870	0.866	0.861	0.857	0.852
0.7	0.848	0.843	0.838	0.833	0.828	0.823	0.818	0.812	0.807	0.801
0.8	0.796	0.790	0.784	0.778	0.772	0.766	0.760	0.753	0.747	0.740
0.9	0.734	0.727	0.721	0.714	0.707	0.700	0.693	0.686	0.680	0.673
1.0	0.666	0.659	0.652	0.645	0.638	0.631	0.624	0.617	0.610	0.603
1.1	0.596	0.589	0.582	0.576	0.569	0.562	0.556	0.549	0.543	0.536
1.2	0.530	0.524	0.518	0.511	0.505	0.499	0.493	0.487	0.482	0.476
1.3	0.470	0.465	0.459	0.454	0.448	0.443	0.438	0.433	0.428	0.423
1.4	0.418	0.413	0.408	0.404	0.399	0.394	0.390	0.385	0.381	0.377
1.5	0.372	0.368	0.364	0.360	0.356	0.352	0.348	0.344	0.341	0.337
1.6	0.333	0.330	0.326	0.323	0.319	0.316	0.312	0.309	0.306	0.303
1.7	0.299	0.296	0.293	0.290	0.287	0.284	0.281	0.279	0.276	0.273
1.8	0.270	0.268	0.265	0.262	0.260	0.257	0.255	0.252	0.250	0.247
1.9	0.245	0.243	0.240	0.238	0.236	0.234	0.231	0.229	0.227	0.225
2.0	0.223	0.221	0.219	0.217	0.215	0.213	0.211	0.209	0.207	0.205

The effective stiffness for the composite column consists of the sum of the stiffnesses of the components:

$$(EI)_e = E_a I_a + 0.8 \, E_{cd} I_c + E_s I_s \tag{22}$$

where

I_a, I_c and I_s are the moments of inertia of the cross sectional areas of the structural steel, the concrete (with the area in tension assumed to be uncracked) and the reinforcement, respectively,

E_a and E_s are the stiffness moduli of the structural steel and the reinforcement and

@Seismicisolation

@Seismicisolation

$0.8\ E_{cd}\ I_c$ is the effective stiffness of the concrete section with

$$E_{cd} = E_{cm} / 1.35 \tag{23}$$

with E_{cm} being the secant-modulus of concrete according to table 2.

The reduction of the concrete component in eqn. 22 by the factor 0.8 is a measurement to consider cracking in the concrete caused by moment action due to second order effects. The stiffness has to be determined using a safety factor of 1.35 (eqn. 23).

The simplified design method of Eurocode 4 has been developed with an effective stiffness modulus of the concrete of 600 f_{ck}. In order to have a similar basis like EC2, the secant modulus of concrete E_{cm} was chosen as reference value. The transformation led to the factor 0.8 in eqn. 22. This factor as well as the safety factor 1.35 in eqn. 23 may be considered as the effect of cracking of concrete under moment action due to the second order effects. So, if this method is used for a test evaluation of composite columns, which is typically done without any safety factor, the safety factor for the stiffness should be taken into account subsequently, i.e. the predicted member capacity should be calculated using ($0.8\ E_{cm} / 1.35$). In addition, the value of 1.35 should not be changed, even if different safety factors are used in the country of application.

The influence of the long-term behaviour of the concrete on the load bearing capacity of the column is considered by a modification of the concrete modulus. Caused by the influence of the deflections on the internal forces (second order theory) the load bearing capacity of the columns may be reduced by creep and shrinkage. For a loading which is fully permanent, the modulus of the concrete is half of the origin value. For loads that are only partly permanent, an interpolation may be carried out:

$$E_c = E_{cd}\left(1 - 0.5\,\frac{N_{G.sd}}{N_{Sd}}\right) \tag{24}$$

where

N_{Sd} is the acting design normal force

$N_{G.Sd}$ is the part of it, which is permanent.

This method leads to a redistribution of the stresses into the steel part, which is a good simulation of the reality.

For short columns and/or high eccentricities of loads, creep and shrinkage need not be considered. If the eccentricity of the axial load exceeds twice the relevant dimension of the cross-section, the influence of the long-term effects may be neglected compared to the actual bending moments.

Furthermore, the influence of creep and shrinkage is significant only for slender columns. If the limit slenderness values of the following equations are observed, the influence of long-term effects need not be taken into account.

For braced and non-sway systems:

$$\bar{\lambda} \le \frac{0.8}{1-\delta} \tag{25}$$

For unbraced or sway systems:

$$\bar{\lambda} \le \frac{0.5}{1-\delta} \tag{26}$$

with δ according to eqn. 9.

@Seismicisolation

@Seismicisolation

These slenderness ratios lead to rather high limits, when long-term effects are considered. This has been verified in long-term loading tests, where nearly no influence of creep and shrinkage could be observed. The concrete is sheltered from the environment and may be compared with concrete under water. Additionally, the limit values 0.8 and 0.5 are applied only to the concrete part of the sections given by the value "$1 - \delta$". For the check of the limit values, the relative slenderness $\bar{\lambda}$ may be determined ignoring the influence of long-term effects, so that no iteration becomes necessary.

3.5 Resistance of a section to bending

For the determination of the resistance of a section against bending moments, a full plastic stress distribution in the section has been assumed (fig. 6). The concrete lying in the tension zone of the section is assumed to be cracked and is therefore neglected. The neutral axis of the stresses is found by the condition that there is no resulting normal force of the stresses. The internal bending moment resulting from the stresses and depending on the position of the neutral axis is the resistance of the section against bending moments $M_{pl.Rd}$.

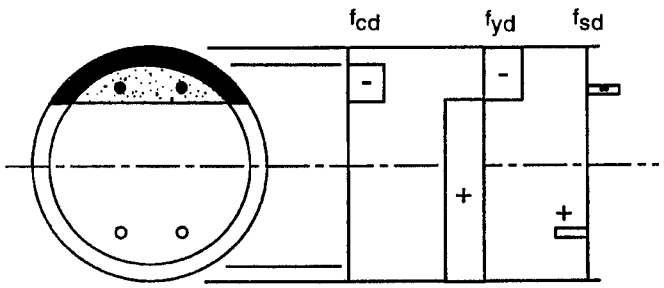

Fig. 6 – Stress distribution for the bending resistance of a section

Tables 8 through 10 give the relation of the bending capacities of composite hollow sections to steel hollow sections without concrete filling. For the rectangular and square hollow sections a corner radius of twice the wall thickness has been assumed. In order to enable a quick calculation the reference values, i.e. the steel section without filling, were determined without any corner radius. Therefore the values lower than 1.0 are possible. The values $m_{\square}$ and $m_{\circ}$ taken from the tables 8 through 11 must then be multiplied by the plastic resistance of the steel section. This leads to eqns. 27 and 28, respectively (for the notation, see fig. 3):

– rectangular and square sections:

$$M_{pl.Rd} = m_{\square} \frac{h^2 b - (h-2t)^2 (b-2t)}{4} f_{yd} \tag{27}$$

where

h is the cross section dimension transverse to the direction of the relevant bending axis

– circular tubes:

$$M_{pl.Rd} = m_{\circ} \frac{d^3 - (d-2t)^3}{6} f_{yd} \tag{28}$$

The values have been determined without considering any reinforcement. Reinforcement may be included in a simplified manner by adding the plastic bending capacity of the reinforcement alone:

@Seismicisolation

@Seismicisolation

$$M_{pl.s.Rd} = \sum_{i=1}^{n} |e_i| \, A_{si} \, f_{sd} \tag{29}$$

where

A_{si} the area of a reinforcing bar,

$|e_i|$ is the distance of the bar to the relevant bending axis and

f_{sd} is the design strength of the reinforcement

Depending on the position of the neutral axis of the stresses, this leads to very small deviations from the exact values.

Concrete filled circular hollow section columns for the new VDEh-building in Düsseldorf, Germany.

@Seismicisolation

@Seismicisolation

Table 8 – Correction factor $m_{\square}$ for rectangular hollow sections with h/b = 0.5

		h/t									
		10	15	20	25	30	40	50	60	80	100
Fe235	C20	0.9743	1.0134	1.0378	1.0556	1.0694	1.0898	1.1045	1.1156	1.1314	1.1422
	C30	0.9858	1.0287	1.0551	1.0738	1.0879	1.1081	1.1220	1.1321	1.1461	1.1553
	C40	0.9952	1.0404	1.0677	1.0865	1.1004	1.1198	1.1328	1.1422	1.1547	1.1628
	C50	1.0031	1.0497	1.0773	1.0959	1.1095	1.1281	1.1403	1.1489	1.1603	1.1676
Fe275	C20	0.9704	1.0080	1.0315	1.0487	1.0622	1.0825	1.0972	1.1086	1.1250	1.1363
	C30	0.9811	1.0225	1.0483	1.0667	1.0808	1.1012	1.1154	1.1260	1.1408	1.1506
	C40	0.9900	1.0340	1.0608	1.0796	1.0937	1.1136	1.1271	1.1369	1.1502	1.1589
	C50	0.9975	1.0432	1.0705	1.0893	1.1032	1.1224	1.1351	1.1443	1.1565	1.1643
Fe355	C20	0.9649	1.0001	1.0220	1.0381	1.0509	1.0705	1.0852	1.0967	1.1137	1.1259
	C30	0.9741	1.0131	1.0375	1.0553	1.0690	1.0895	1.1042	1.1153	1.1312	1.1420
	C40	0.9820	1.0238	1.0497	1.0681	1.0822	1.1026	1.1168	1.1273	1.1419	1.1516
	C50	0.9889	1.0326	1.0594	1.0782	1.0922	1.1122	1.1258	1.1357	1.1492	1.1580
Fe460	C20	0.9603	0.9931	1.0133	1.0283	1.0402	1.0587	1.0729	1.0843	1.1016	1.1143
	C30	0.9680	1.0045	1.0274	1.0441	1.0573	1.0774	1.0921	1.1036	1.1203	1.1320
	C40	0.9748	1.0141	1.0387	1.0565	1.0704	1.0908	1.1055	1.1165	1.1323	1.1430
	C50	0.9810	1.0224	1.0481	1.0665	1.0806	1.1010	1.1153	1.1259	1.1407	1.1505

Table 9 – Correction factor $m_{\square}$ for square hollow sections with h/b = 1.0

		h/t									
		10	15	20	25	30	40	50	60	80	100
Fe235	C20	0.9268	0.9840	1.0186	1.0439	1.0640	1.0953	1.1191	1.1382	1.1674	1.1887
	C30	0.9388	1.0023	1.0415	1.0701	1.0925	1.1264	1.1513	1.1707	1.1989	1.2187
	C40	0.9495	1.0181	1.0603	1.0908	1.1143	1.1491	1.1739	1.1927	1.2193	1.2374
	C50	0.9593	1.0317	1.0760	1.1076	1.1316	1.1664	1.1906	1.2086	1.2335	1.2501
Fe275	C20	0.9231	0.9780	1.0109	1.0349	1.0540	1.0839	1.1070	1.1257	1.1547	1.1763
	C30	0.9337	0.9947	1.0321	1.0594	1.0810	1.1141	1.1388	1.1582	1.1870	1.2075
	C40	0.9434	1.0092	1.0498	1.0793	1.1023	1.1367	1.1617	1.1808	1.2084	1.2275
	C50	0.9523	1.0220	1.0649	1.0957	1.1194	1.1542	1.1789	1.1975	1.2237	1.2413
Fe355	C20	0.9179	0.9697	1.0000	1.0219	1.0393	1.0667	1.0882	1.1059	1.1340	1.1555
	C30	0.9266	0.9837	1.0182	1.0435	1.0636	1.0947	1.1186	1.1377	1.1668	1.1882
	C40	0.9347	0.9962	1.0340	1.0616	1.0834	1.1166	1.1414	1.1608	1.1895	1.2099
	C50	0.9422	1.0075	1.0477	1.0770	1.0998	1.1342	1.1591	1.1783	1.2061	1.2253
Fe460	C20	0.9137	0.9627	0.9907	1.0106	1.0263	1.0511	1.0707	1.0871	1.1136	1.1345
	C30	0.9207	0.9743	1.0060	1.0291	1.0475	1.0764	1.0988	1.1171	1.1458	1.1675
	C40	0.9273	0.9848	1.0197	1.0452	1.0654	1.0969	1.1208	1.1400	1.1691	1.1904
	C50	0.9336	0.9945	1.0319	1.0592	1.0808	1.1138	1.1385	1.1579	1.1867	1.2072

@Seismicisolation

@Seismicisolation

Table 10 – Correction factor $m_{\square}$ for rectangular hollow sections with h/b = 2.0

		h/t									
		10	15	20	25	30	40	50	60	80	100
Fe235	C20	0.8564	0.9351	0.9787	1.0093	1.0334	1.0712	1.1009	1.1258	1.1659	1.1976
	C30	0.8645	0.9503	1.0000	1.0356	1.0639	1.1082	1.1425	1.1705	1.2142	1.2473
	C40	0.8722	0.9644	1.0191	1.0587	1.0900	1.1385	1.1753	1.2047	1.2494	1.2820
	C50	0.8797	0.9776	1.0364	1.0790	1.1126	1.1638	1.2020	1.2319	1.2762	1.3077
Fe275	C20	0.8540	0.9304	0.9721	1.0010	1.0236	1.0588	1.0867	1.1101	1.1483	1.1789
	C30	0.8610	0.9438	0.9910	1.0246	1.0512	1.0930	1.1256	1.1525	1.1951	1.2279
	C40	0.8678	0.9563	1.0082	1.0456	1.0753	1.1215	1.1571	1.1858	1.2302	1.2632
	C50	0.8743	0.9681	1.0240	1.0645	1.0965	1.1458	1.1831	1.2127	1.2574	1.2898
Fe355	C20	0.8507	0.9240	0.9629	0.9894	1.0097	1.0412	1.0660	1.0869	1.1216	1.1500
	C30	0.8563	0.9348	0.9784	1.0089	1.0330	1.0706	1.1002	1.1250	1.1651	1.1968
	C40	0.8617	0.9451	0.9927	1.0268	1.0538	1.0960	1.1290	1.1561	1.1990	1.2319
	C50	0.8669	0.9548	1.0061	1.0431	1.0725	1.1182	1.1534	1.1820	1.2262	1.2593
Fe460	C20	0.8481	0.9189	0.9555	0.9798	0.9982	1.0262	1.0481	1.0666	1.0974	1.1231
	C30	0.8525	0.9275	0.9679	0.9957	1.0173	1.0510	1.0775	1.0998	1.1366	1.1663
	C40	0.8568	0.9357	0.9797	1.0106	1.0349	1.0729	1.1029	1.1280	1.1684	1.2002
	C50	0.8609	0.9437	0.9908	1.0243	1.0510	1.0926	1.1252	1.1521	1.1947	1.2275

Table 11 – Correction factor $m_{\circ}$ for circular hollow sections

		d/t									
		10	15	20	25	30	40	50	60	80	100
Fe235	C20	1.0294	1.0491	1.0669	1.0830	1.0976	1.1231	1.1447	1.1634	1.1943	1.2190
	C30	1.0420	1.0685	1.0914	1.1115	1.1291	1.1589	1.1833	1.2037	1.2363	1.2615
	C40	1.0534	1.0853	1.1121	1.1348	1.1543	1.1866	1.2122	1.2333	1.2663	1.2913
	C50	1.0638	1.1003	1.1298	1.1545	1.1752	1.2089	1.2351	1.2564	1.2892	1.3137
Fe275	C20	1.0255	1.0429	1.0589	1.0735	1.0868	1.1105	1.1309	1.1487	1.1785	1.2026
	C30	1.0366	1.0604	1.0813	1.0998	1.1163	1.1445	1.1679	1.1878	1.2199	1.2450
	C40	1.0469	1.0758	1.1005	1.1217	1.1403	1.1713	1.1963	1.2171	1.2500	1.2751
	C50	1.0563	1.0896	1.1172	1.1405	1.1604	1.1931	1.2190	1.2402	1.2731	1.2980
Fe355	C20	1.0201	1.0343	1.0475	1.0598	1.0712	1.0918	1.1100	1.1262	1.1538	1.1767
	C30	1.0292	1.0488	1.0665	1.0826	1.0971	1.1225	1.1441	1.1628	1.1936	1.2182
	C40	1.0377	1.0620	1.0833	1.1021	1.1188	1.1474	1.1710	1.1910	1.2233	1.2484
	C50	1.0456	1.0739	1.0982	1.1191	1.1375	1.1682	1.1930	1.2138	1.2466	1.2718
Fe460	C20	1.0158	1.0271	1.0379	1.0481	1.0576	1.0752	1.0911	1.1054	1.1305	1.1517
	C30	1.0231	1.0391	1.0538	1.0674	1.0799	1.1023	1.1217	1.1389	1.1678	1.1915
	C40	1.0299	1.0500	1.0681	1.0844	1.0991	1.1249	1.1467	1.1655	1.1965	1.2212
	C50	1.0365	1.0602	1.0811	1.0995	1.1160	1.1442	1.1676	1.1874	1.2195	1.2447

3.6 Resistance of a section to bending and compression

The resistance of a section to bending and compression may be shown by the cross-section interaction curve, which describes the relationship between the inner normal force N_{Rd} and the inner bending moment M_{Rd}. The determination of the interaction curve generally requires comprehensive calculation. The position of the neutral axis of the stresses in fig. 6 (with the internal force equal to zero) is varied until it is the lowest border of the section and the inner force is equal to $N_{pl,Rd}$.

@Seismicisolation

@Seismicisolation

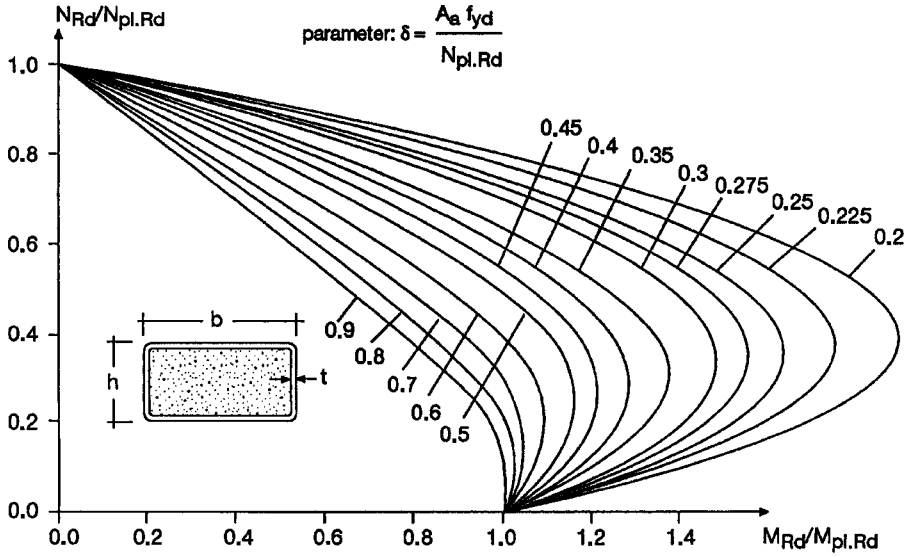

Fig. 7 – Interaction curve for rectangular sections with h/b = 0.5

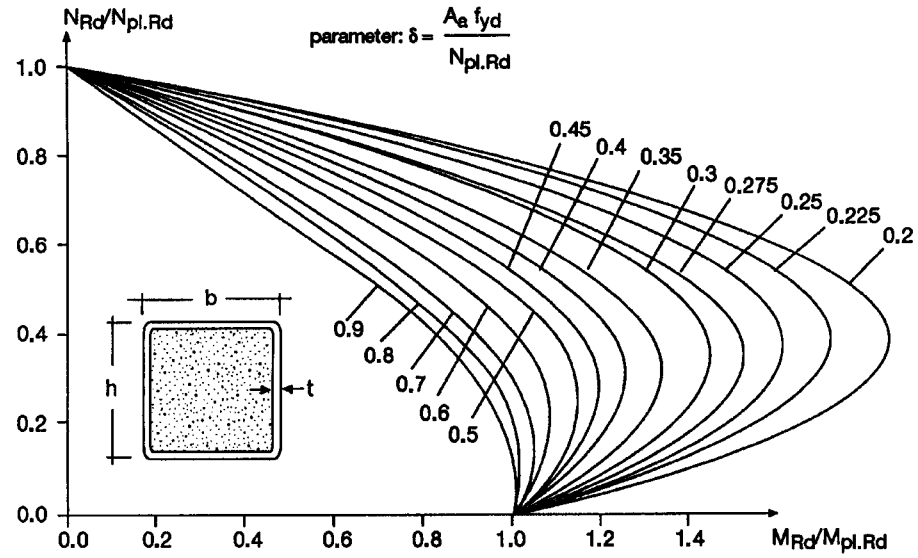

Fig. 8 – Interaction curve for square sections with h/b = 1.0

@Seismicisolation

@Seismicisolation

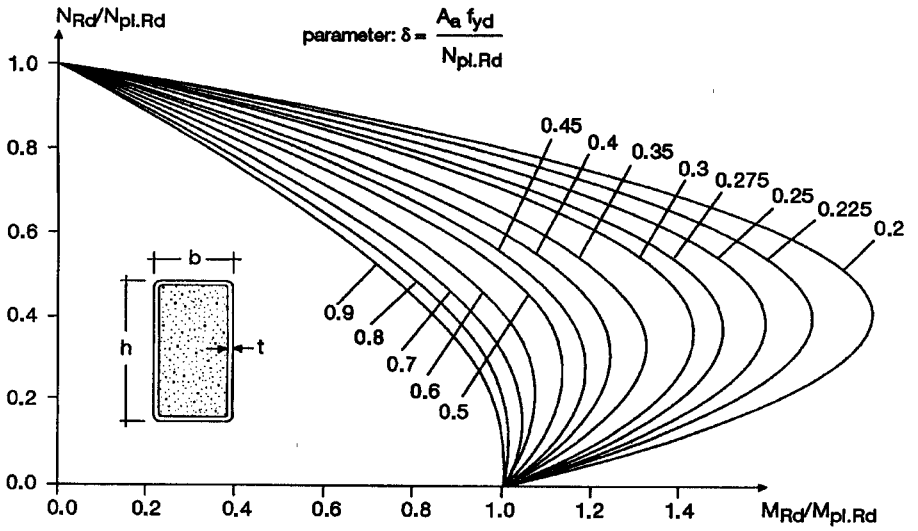

Fig. 9 – Interaction curve for rectangular sections with h/b = 2.0

For selected relations of sections, the figures 7 through 10 show interaction curves depending on the cross-section parameter δ. These may be used for a quick design to estimate the sections. They have been determined without any reinforcement, but they may be used also for reinforced sections, if the reinforcement is considered in the δ-value and in the values of $N_{pl.Rd}$ and $M_{pl.Rd}$, respectively

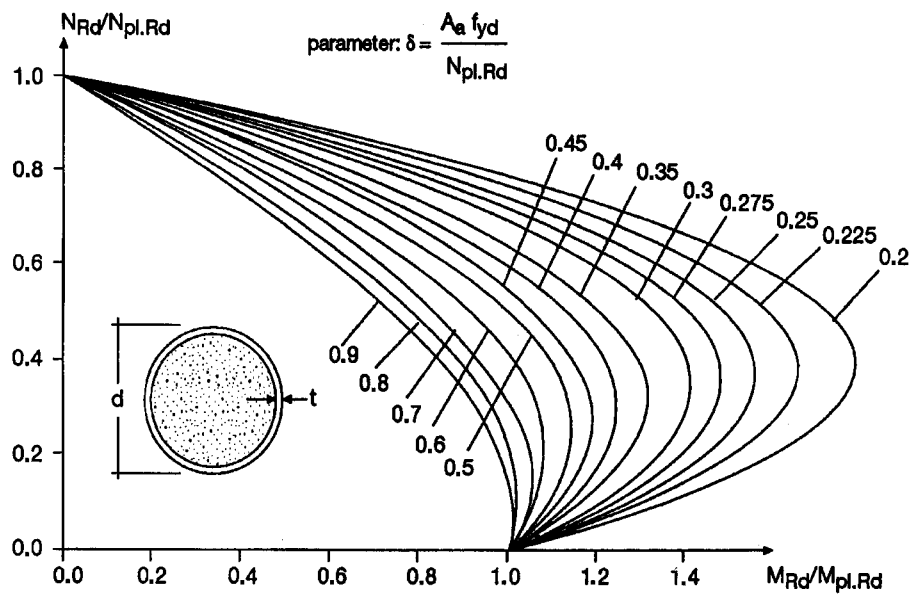

Fig. 10 – Interaction curve for circular sections

@Seismicisolation

@Seismicisolation

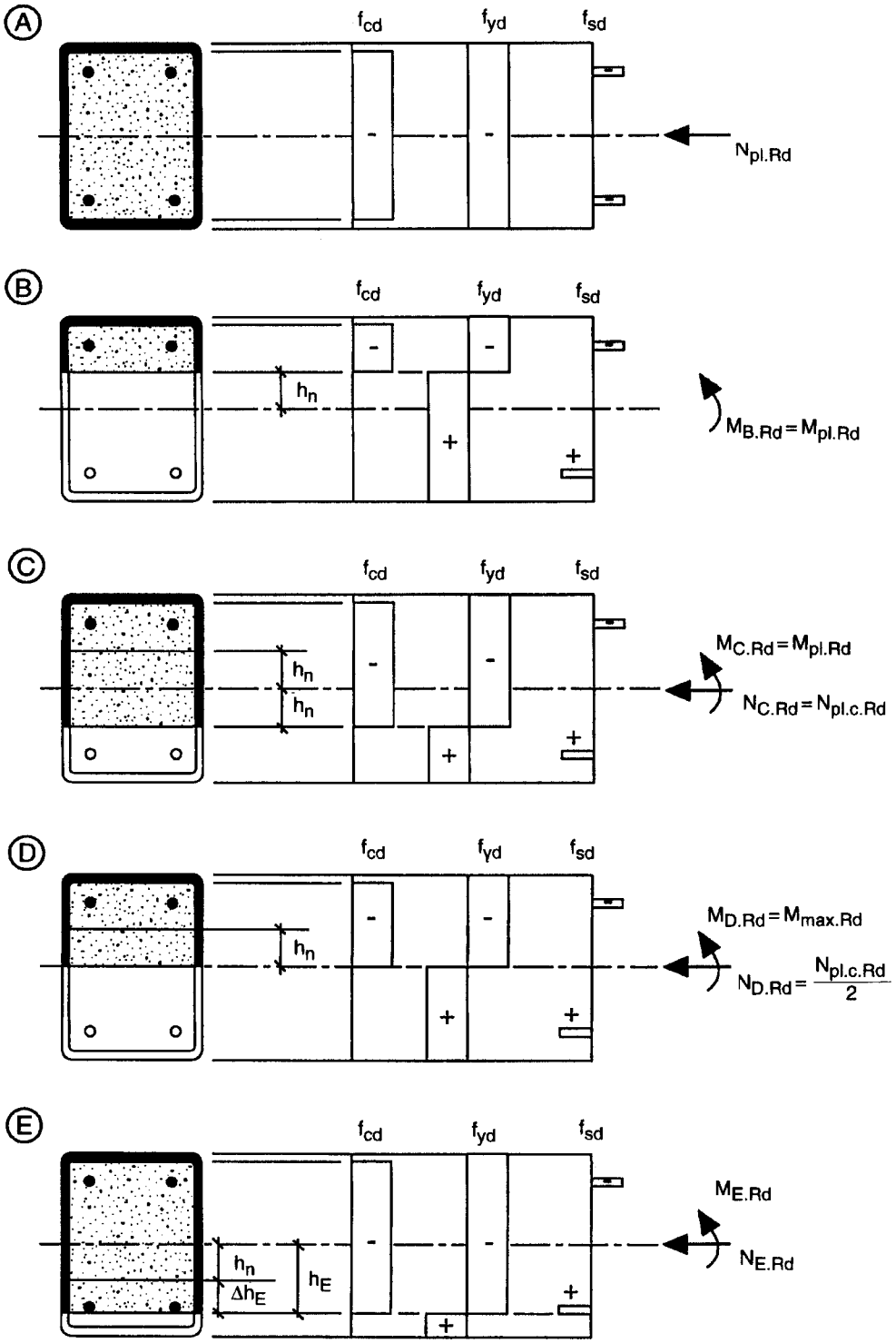

Fig. 11 – Stress distributions of selected positions of the neutral axis (points A through E)

@Seismicisolation

@Seismicisolation

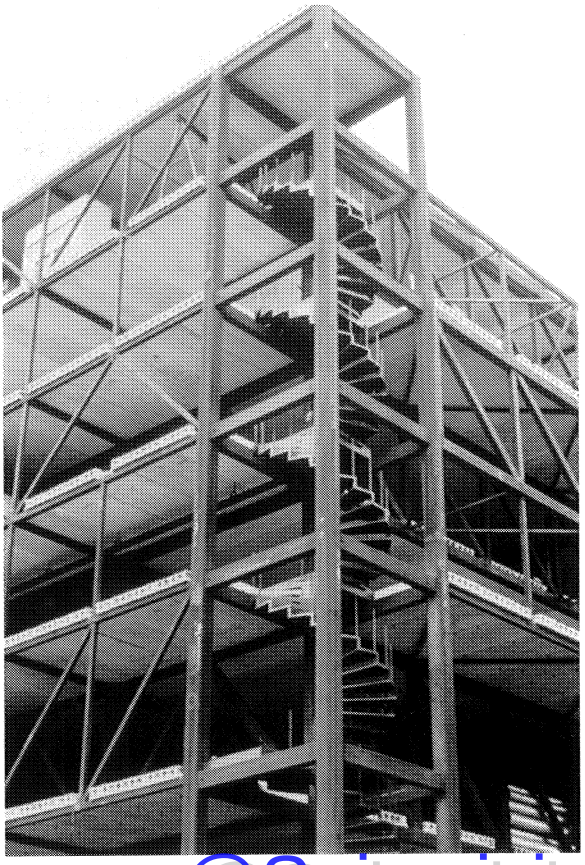

Concrete filled structural hollow section columns at the University of Winnipeg, Canada.

@Seismicisolation

@Seismicisolation

The maximum value of the inner moment is obtained, if the neutral axis lies exactly on the centre line. Fig. 11 shows significant positions of the neutral axis, where the inner normal force and the inner moment may easily be determined using the double-symmetrical properties of the section.

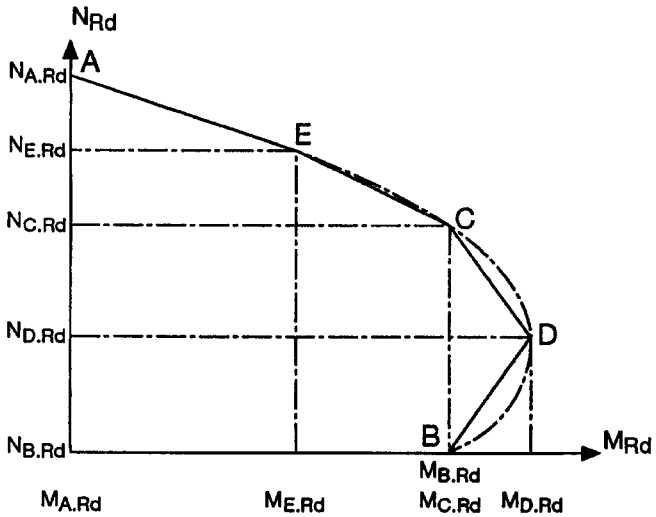

Fig. 12 – Interaction curve approached by a polygonal connection of the points A to E

The point of the interaction curve, which is obtained when the neutral axis coincides exactly with the centre line of the cross section, is designated as the point D in fig. 11 and fig. 12. Observing the stress distribution at the point D (fig. 11) it can be noticed that the resulting inner normal force must be half of the plastic resistance of the pure concrete part of the section $N_{pl.c.Rd}$. This is because the stresses in the structural steel as well as the stresses in the reinforcement compensate each other. The inner moment $M_{D.Rd}$, which belongs to this stress distribution, may easily be calculated:

$$M_{D.Rd} = M_{max.Rd} = W_{pa}\, f_{yd} + \frac{1}{2}\, W_{pc}\, f_{cd} + W_{ps}\, f_{sd} \tag{30}$$

where

W_{pa}, W_{pc} and W_{ps} are the plastic section moduli of the structural steel, the concrete and the reinforcement and

f_{yd}, f_{cd} and f_{sd} are the design strengths according to chapter 2.

$$N_{D.Rd} = \frac{1}{2}\, N_{pl.c.Rd} = \frac{1}{2}\, A_c\, f_{cd} \tag{31}$$

The plastic section modulus for the hollow sections may be taken from tables or be calculated following the equations 32 through 36 and the notations of fig. 3.
The equations 32 through 33 for rectangular sections under bending about the y-axis may also be applied for bending about the z-axis of the section, if the dimensions h and b are exchanged.

$$W_{pc} = \frac{(b-2t)\,(h-2t)^2}{4} - \frac{2}{3}\, r^3 - r^2\,(4-\pi)\cdot(0.5\,h - t - r) \tag{32}$$

@Seismicisolation

@Seismicisolation

$$W_{pa} = \frac{b\,h^2}{4} - \frac{2}{3}\,(r+t)^3 - (r+t)^2\,(4 - \pi)\,(0.5\,h - t - r) \tag{33}$$

Here the corner radius of the hollow section is exactly included. For slender rectangular sections the influence of the corner radius is so small that all parts of the equations 32 through 33 containing the radius r may be neglected.
For circular sections, this results in:

$$W_{pc} = \frac{(d-2t)^3}{6} \tag{34}$$

$$W_{pa} = \frac{d^3}{6} - W_{pc} \tag{35}$$

For the reinforcement, the following equation is derived:

$$W_{ps} = \sum_{i=1}^{n} |A_{si}\,e_i| \tag{36}$$

where

A_{si} are the cross sectional areas of the reinforcing bars and

e_i are their distances to the centre line of the section transverse to the relevant bending axis

Office building in Toulouse, France (architects: Starkier und Gaisne). Concrete filled square hollow section columns with 250 mm and 300 mm widths.

Comparing the stress distributions of the point B, where the inner normal force is zero, and the point D (fig. 11) the neutral axis moves over the distance of h_n. So the inner normal force of the point D, $N_{D.Rd}$ may be determined by the additional compressed parts of the section. This can be used for the determination of the distance h_n, because the force $N_{D.Rd}$ is determined by eqn. 31. As for an example, for the rectangular section, it results in:

@Seismicisolation

@Seismicisolation

$$h_n = \frac{N_{pl.c.Rd} - A_{sn}(2f_{sd} - f_{cd})}{2bf_{cd} + 4t(2f_{yd} - f_{cd})} \tag{37}$$

The reinforcement part A_{sn} described by the eqn. 37 represents only the rounding off the state. For the chosen example (fig. 11), no reinforcement lies in this region of the section.
The exact determination of h_n for circular sections is rather complicated because of the nonconstant width in the depth of h_n. Substituting the dimension b by d, the equation 37 can be used with good approximation for circular sections. The deviation compared to an exact calculation is smaller than 3%.

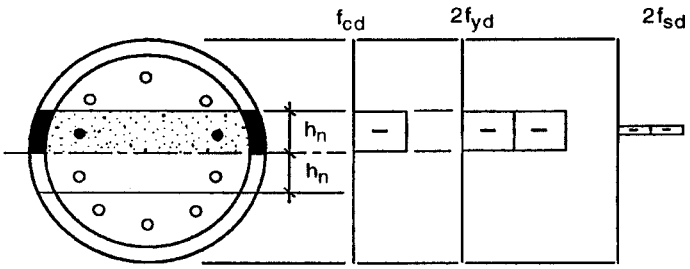

Fig. 13 – Additional stresses at the point D

Fig. 13 shows the additional compressed parts of the section at the point D. If the resulting inner moment of these parts $M_{n.Rd}$ is subtracted from $M_{D.Rd}$, the bending resistance $M_{B.Rd} = M_{pl.Rd}$ is obtained.

$$M_{pl.Rd} = M_{B.Rd} = M_{D.Rd} - M_{n.Rd} \tag{38}$$

$M_{n.Rd}$ can be interpreted as the bending resistance of the section with the depth of 2 h_n.

$$M_{n.Rd} = W_{pan}\, f_{yd} + \frac{1}{2}\, W_{pcn}\, f_{cd} + W_{psn}\, f_{sd} \tag{39}$$

where

W_{pan}, W_{pcn} and W_{psn} are the plastic section moduli of the structural steel, the concrete and the reinforcement in the region of 2 h_n

The plastic section moduli of the section with the depth of 2 h_n are obtained by the equations 40 through 41. These equations can also be used for circular sections substituting b by d.

$$W_{pcn} = (b - 2t)\, h_n^2 - W_{psn} \tag{40}$$

$$W_{pan} = 2th_n^2 \tag{41}$$

W_{psn} is determined with the equation 36 using only those reinforcing bars, which lie within the distance of 2 h_n.
Looking at the stress distribution at the point C (fig. 11), the distance of the neutral axis to the centre line is again h_n. The inner moment $M_{C.Rd}$ is equal to the moment $M_{B.Rd}$, because the additional compressed sections do not increase the inner moment. The inner normal force is twice the value of that at the point D.

@Seismicisolation

@Seismicisolation

$$M_{C.Rd} = M_{B.Rd} = M_{pl.Rd} \tag{42}$$

$$N_{C.Rd} = 2N_{D.Rd} = N_{pl.c.Rd} \tag{43}$$

The point E is not significant concerning the symmetry of the section. It is a point between the points C and A of the polygonal interaction curve. For the determination of this point E, the neutral axis should be assumed at a position which enables a simple determination of the inner forces. The best point is just in the middle of the point C and A. The determination of the point E shall be shown for the mean value of $N_{pl.Rd}$ and $N_{pl.c.Rd}$ (fig. 11).

$$N_{E.Rd} = \frac{N_{pl.Rd} + N_{pl.c.Rd}}{2} \tag{44}$$

$$h_E = h_n + \frac{N_{pl.Rd} - N_{pl.c.Rd} - A_{sE}\langle 2f_{sd} - f_{cd}\rangle}{2bf_{cd} + 4t\,(2f_{yd} - f_{cd})} \tag{45}$$

where

A_{sE} is the sum of the cross sectional areas of the reinforcing bars at a distance between h_E and h_n.

The plastic section moduli may be determined according to the equations 40 and 41, if h_n is replaced by h_E.

With the points A through E, the interaction curve has been well approximated (fig. 12).

Higher school of electronics, electricity and computer science in Marne la Vallée, France (architect: Perrault). Circular concrete filled hollow section columns with 273 mm and 323.9 mm diameters.

@Seismicisolation

@Seismicisolation

3.7 Influence of shear forces

The shear force of a composite column may either be assigned to the steel profile alone or be divided into a steel and a reinforced concrete component. The design for the component of the reinforced concrete shall be carried out following the regulations of Eurocode 2. The component for the structural steel can be considered by reducing the normal stresses in those parts of the steel profile, which are able to bear the shear (fig. 14).

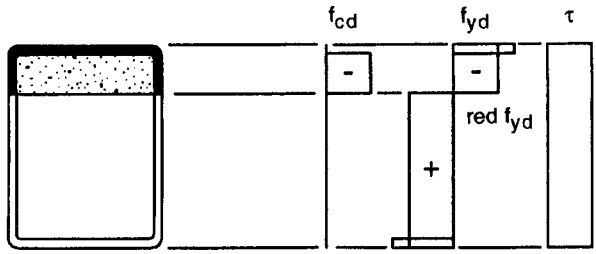

Fig. 14 – Reduction of the normal stresses due to shear

The reduction of the normal stresses due to shear stresses may be carried out according to the hypothesis of Huber/Mises/Hencky or according to a more simple quadratic equation from Eurocode 4. For the determination of the cross-section interaction curve, it is better to transform the reduction of the normal stresses into a reduction of the relevant cross sectional areas (eqns. 46, 47).

$$\text{red } A_V = A_V \left[1 - \left(\frac{2V_{Sd}}{V_{pl.Rd}} - 1 \right)^2 \right] \tag{46}$$

$$V_{pl.Rd} = A_V \frac{f_{yd}}{\sqrt{3}} \tag{47}$$

where

V_{sd} is the steel component of the design shear force,

$V_{pl.Rd}$ is the resistance of the steel section for shear and

A_V is the cross sectional area of the steel section, which can bear shear.

For bearing the shear the following cross sectional areas may be taken:

- rectangular hollow sections: $A_V = 2\,(h - t)\,t$
- circular hollow sections: $A_V = 2\,d\,t$

The value of red A_v has to be determined by diminishing the width of the relevant areas. If eqn. 48 is used for the determination of the cross-section interaction curve, all equations given above may be used by changing the relevant thickness t to the reduced thickness red t:

$$\text{red } t = t \left[1 - \left(\frac{2V_{Sd}}{V_{pl.Rd}} - 1 \right)^2 \right] \tag{48}$$

The influence of the shear stresses on the normal stresses need not be considered, if eqn. 49 is fulfilled.

$$V_{Sd} \leq 0.5\, V_{pl.Rd} \tag{49}$$

@Seismicisolation

@Seismicisolation

Residential building in Nantes, France (architects: Dubosc and Landowski). Concrete filled square hollow section columns with 200 mm width.

@Seismicisolation

@Seismicisolation

3.8 Resistance of a member to bending and compression

3.8.1 Uniaxial bending and compression

Fig. 15 shows the method for the design of a member under combined compression and uniaxial bending using the cross-section interaction curve. Considering the moments due to imperfection, the bearing of the internal forces, which are determined applying the second order theory, is shown.

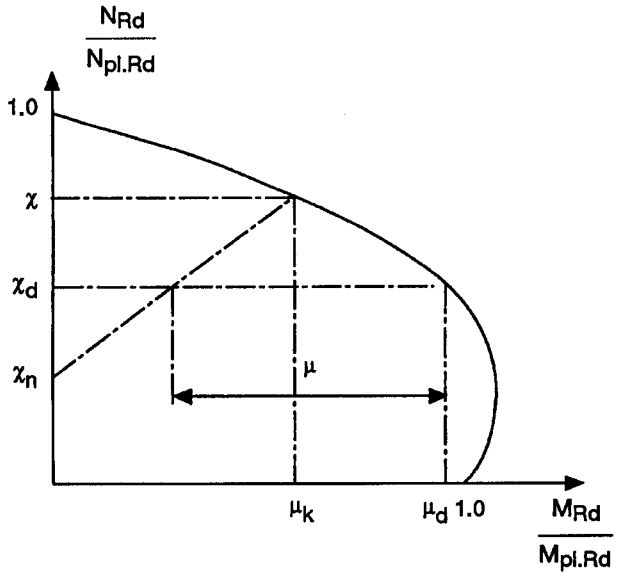

Fig. 15 – Design for compression and uniaxial bending

At first, the load capacity for axial compression has to be determined according to chapter 3.4 ($\bar{\lambda}$, χ). The moment μ_k, which can be read from the interaction curve at the level of χ, is defined as the imperfection moment. Having reached the load bearing capacity for axial compression, the column cannot bear any additional bending moment. For pure steel columns according to Eurocode 3, this imperfection moment has been recalculated into representative initial deflections. For composite columns, this imperfection moment is used directly to influence the bearing capacity for additional bending moments at levels lower than χ. It is assumed to decrease linearly to zero at the level of χ_n. The value of χ_d resulting from the actual design normal force N_{Sd} ($\chi_d = N_{Sd}/N_{pl.Rd}$) leads to the moment factor μ_d for the capacity of the section. This factor μ_d is diminished by the relevant part of the imperfection moment to the value μ.

$$\mu = \mu_d - \mu_k \frac{\chi_d - \chi_n}{\chi - \chi_n} \tag{50}$$

The influence of the imperfection on different bending moment distributions can be considered by means of the value χ_n. Assuming an initial deflection of sinusoidal or parabolic shape and considering the influence of second order theory, the design point of the column would leave the end of the column only for high axial forces, if the bending moment distribution is that of double curvature bending, for example. Over a wide range of column forces, the end moment will give the maximum moment. So, the imperfection need only be considered for high normal forces ($\chi_n > 0$). For constant moments, e.g. case a in fig. 16, or

@Seismicisolation

@Seismicisolation

lateral loads within the column length or for sway frames, the imperfection must always be taken into account ($\chi_n = 0$), because the design point of the column will always lie within the column length (fig. 16). For end moments, χ_n may be determined according to:

$$\chi_n = \chi \cdot \frac{1 - r}{4} \tag{51}$$

where

r is the ratio of the larger to the smaller end moment ($-1 \leq r \leq +1$)

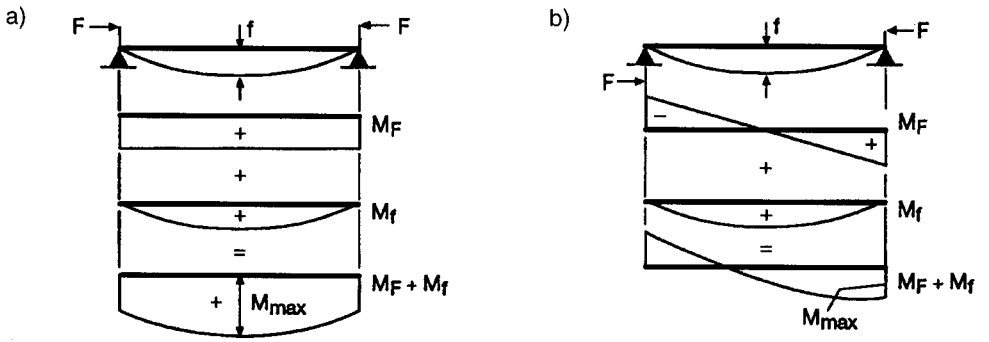

Fig. 16 – Influence of moments from eccentric loads M_F combined with moments from imperfections M_f

By means of μ, the capacity for combined compression and bending of the member is checked:

$$M_{Sd} \leq 0.9\ \mu\ M_{pl.Rd} \tag{52}$$

where

M_{Sd} is the design bending moment of the column according to chapter 3.9.

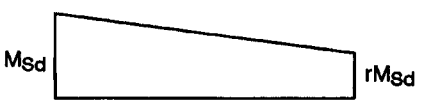

Fig. 17 – Relation of the end moments ($-1 \leq r \leq +1$)

The additional reduction by the factor 0.9 covers the following assumptions of this simplified design method:

- The interaction curve of the section is determined assuming full plastic behaviour of the materials. No strain limitation needs to be observed.
- The calculation of the design bending moment M_{Sd} according to chapter 3.9 is carried out with the effective stiffness according to chapter 3.4. The influence of the cracking of the concrete on the stiffness is not covered for higher bending moments by the effective stiffness alone.

Interaction curves of the composite sections always show an increase in the bending capacity higher than $M_{pl.Rd}$. The bending resistance increases with an increasing normal force, because former regions in tension are overpressed by the normal force (see chapter 3.6). This positive effect may only be taken into account if it is ensured that the bending moment and the axial force always act together. If this is not ensured and the bending moment and the axial force result from different loading situations, the related moment capacity μ has to be limited to 1.0.

@Seismicisolation

@Seismicisolation

Connection of a composite beam to a concrete filled hollow section column. Loads from the upper column are transduced by a massive steel block to the lower column. The beam is simply laid upon the headplate of the lower column.

@Seismicisolation

@Seismicisolation

3.8.2 Biaxial bending and compression

The design of a member under biaxial bending and compression is based on its design under uniaxial bending and compression. In addition to the chapter 3.8.1, the interaction curve of the section and the moment factor μ have to be determined also for the second main axis. The influence of the imperfection needs only be taken into account for the axis, which is more endangered to fail.

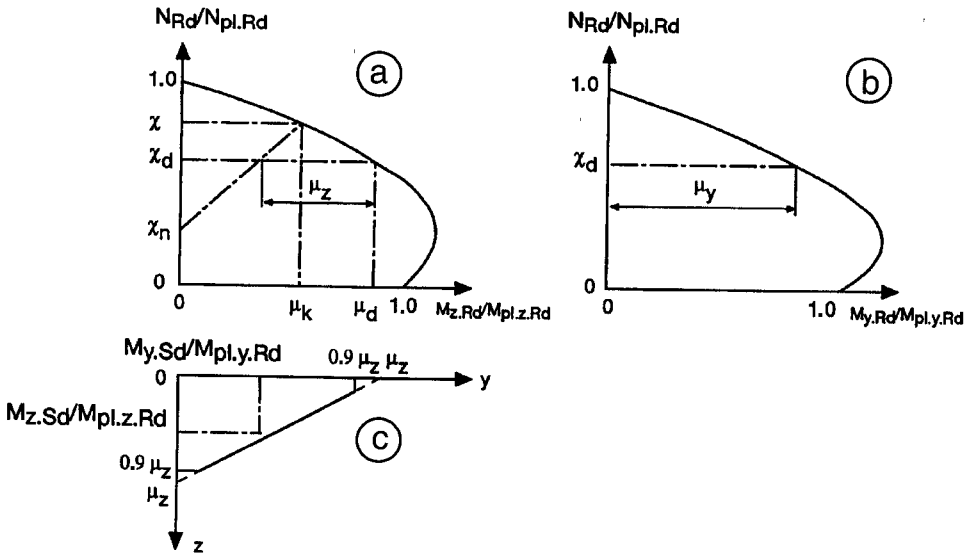

Fig. 18 – Design of a member under combined compression and biaxial bending

Often the two main axes of a section have different effective lengths, so that the determination of the axis, which is more endangered to fail, is evident. On the other hand, the weak axis of the steel section may not be the same of the total section due to reinforcement. Also different acting moments may influence the failure on the single axes.

The moment factor μ should be determined for both main axes, so that the influence of imperfection on the axes can be checked quickly and the relevant axis for the imperfection can be determined clearly.

With the related capacities μ_y and μ_z a new interaction curve is drawn (fig. 18c). The linear connection of μ_y and μ_z is cut at 0.9 μ_y and 0.9 μ_z, respectively, in order to cover small bending moments (mainly uniaxial bending).

The design is successful if the vector from the bending moments of the two axes lies within the new interaction curve. This can also be expressed by means of the following equations:

$$\frac{M_{y.Sd}}{\mu_y\, M_{pl.y.Rd}} + \frac{M_{z.Sd}}{\mu_z\, M_{pl.z.Rd}} \leq 1.0 \qquad (53)$$

$$\frac{M_{y.Sd}}{\mu_y\, M_{pl.y.Rd}} \leq 0.9 \qquad (54)$$

$$\frac{M_{z.Sd}}{\mu_z\, M_{pl.z.Rd}} \leq 0.9 \qquad (55)$$

@Seismicisolation

@Seismicisolation

3.9 Determination of bending moments

3.9.1 General

As already described above, the composite column is analysed as an isolated member of a frame. The end moments of the column are obtained by an analysis of the total frame. If a second order analysis is applied to the frame, the end moments then have to be taken from this analysis. The internal forces of the column are determined with these end moments including lateral loads or the axial loading eccentricities. In general, this calculation has to be carried out considering the second order effects within the column length.
The calculation of the internal bending moments may be carried out following the first order theory, if either the slenderness of the column or the normal forces are very small (eqns. 56, 57).

$$\bar{\lambda} \leq 0.2\,(2 - r) \tag{56}$$

$$\frac{N_{Sd}}{N_{cr}} \leq 0.1 \tag{57}$$

The limit of the eqn. 56 has been chosen according to a relevant regulation of Eurocode 2. The value r is the ratio of the smaller to the larger end moment (fig. 17). If any lateral loading acts within the column length, the limit slenderness ratio is $\bar{\lambda} = 0.2$. Therefore the value r in eqn. 56 has to be used as r = 1 in the case of any lateral loading.
For the determination of the bending moments based on second order theory, the stiffness according to eqn. 22 may be taken.
Initial deflections need not be considered in the simplified design method, because these imperfections have already been taken into account in the determination of the resistance of the column (see 3.8.1).

3.9.2 Exact determination of bending moments

The formulae to determine the bending moments following the second order theory may be found in many reports. For the very common load case of end moments alone, eqn. 58 leads to the exact results.

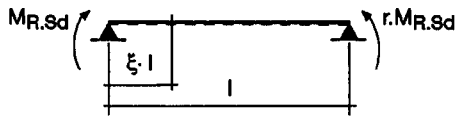

Fig. 19 – End moments

$$M_{Sd}(\xi) = \frac{M_{R.Sd}}{\sin \varepsilon}\,[\sin(\varepsilon - \varepsilon\xi) + r \sin \varepsilon\xi] \tag{58}$$

where ξ is the coordinate along the column length (fig. 19),
r is the ratio of the end moments (fig. 17),
$M_{R.Sd}$ is the larger end moment and

$$\varepsilon = l\sqrt{\frac{N_{Sd}}{(EI)_e}} = \pi\sqrt{\frac{N_{Sd}}{N_{cr}}} \tag{59}$$

where $(EI)_e$ is determined according to eqn. 22 and
l is the column length.

@Seismicisolation

@Seismicisolation

For this case of loading, eqn. 60 may be used in order to check whether the end moment $M_{R.Sd}$ is the maximum bending moment or if the effect of the application of the second order theory leads to a greater moment within the column length.

$$\frac{N_{Sd}}{N_{cr}} \leq \left(\frac{\arccos r}{\pi}\right)^2 \quad \Rightarrow \quad M_{max.Sd} = M_{R.Sd} \tag{60}$$

otherwise:

$$M_{max.Sd} = \frac{M_{R.Sd}}{\sin \varepsilon}\sqrt{r^2 - 2r\cos\varepsilon + 1} \tag{61}$$

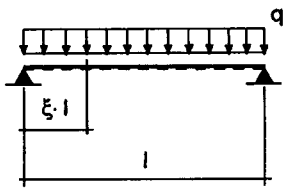

Fig. 20 – Uniform lateral loading

For uniform lateral loading (fig. 20), the moments may be determined according to eqn. 62.

$$M_{Sd}(\xi) = \frac{q\,l^2}{\varepsilon^2}\left[\frac{\cos\left(\frac{\varepsilon}{2} - \varepsilon\xi\right)}{\cos\frac{\varepsilon}{2}} - 1\right] \tag{62}$$

with ε according to eqn. 59.
The position of the maximum moment within the column length due to uniform lateral loading is $\xi = 0.5$.

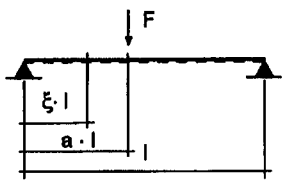

Fig. 21 – Single lateral load

For a single lateral load (fig. 21), eqns. 63 and 64 lead to the moment distribution over the column length following the second order theory.

$$\text{region 1:} \quad M_{Sd}(\xi) = Fl\,\frac{\sin(\varepsilon - a\varepsilon)\sin\varepsilon\xi}{\varepsilon\sin\varepsilon} \tag{63}$$

$$\text{region 2:} \quad M_{Sd}(\xi) = Fl\,\frac{\sin\varepsilon a\,\sin\varepsilon\xi}{\varepsilon\sin\varepsilon} \tag{64}$$

where a is the position of the single lateral load according to fig. 21.
For the combination of loadings (end moments and lateral loads), these formulae can be superposed, if the axial load is the same in all cases. So the moment distribution and the maximum moment due to practically any loading may be determined. On the other hand, these formulae seem to be complicated because of the trigonometrical functions in them, so that they might only be used using a computer.

@Seismicisolation

@Seismicisolation

Concrete filled circular hollow section columns of the new head office building of the Finnish state oil company Neste (architect: Jauhiainen CJN Ky). Under erection the loads were borne by the pure steel structure and after concreting the dead loads were borne, so that extremely short erection time was required.

@Seismicisolation

@Seismicisolation

3.9.3 Simplified method for the determination of bending moments

For a quick and simple hand calculation, the maximum design bending moment for a composite column may be determined by multiplying the maximum first order bending moment by a correction factor k according to eqn. 65.

$$k = \frac{\beta}{1 - \frac{N_{Sd}}{N_{cr}}} \geq 1.0 \qquad (65)$$

where N_{Sd} is the design normal force,
N_{cr} is the buckling load according to eqn. 21

and

β is a factor considering the first order moment distribution according to the eqn. 66.

$$\beta = 0.66 + 0.44\,r \qquad \text{but} \quad \beta \geq 0.44 \qquad (66)$$

The formula for β (eqn. 66) has been derived by comparing the results of the calculation with the linear formula of eqn. 66 with the results from the exact formula (eqn. 61). For the relationship of the end moments r = 1, the value of β becomes 1.1. This is exactly the factor β for $N_{Sd}/N_{cr} = 0.4$, which may be taken as the upper value for the common applications. The comparison led to higher discrepancies for the values of β less than 0.44. Therefore $\beta = 0.44$ has been taken as the lower limit value. For columns with lateral loads, the value of β has always to be taken as $\beta = 1.0$.

@Seismicisolation

@Seismicisolation

4 Shear and load introduction

4.1 General and limit values

Full composite action of the cross-section has been assumed in the design of composite columns. That means, no significant slip occurs in the bond area between the steel part and the reinforced concrete part of the section.
This full composite action must be verified by the construction of the regions of load introduction as well as by the bond between steel and reinforced concrete.
For the concrete filled hollow sections (rectangular, square and circular) a maximum transferable bond stress of

$$\max \tau_{Rd} = 0.4 \text{ N/mm}^2 \tag{67}$$

has to be observed.
This value has been derived from tests. No adhesive bond has been taken into account, because it depends on the surface of the steel profile. Only the capacity caused by friction has led to the admissible bond stress.
If the acting bond stress exceeds the admissible value, the load transfer has to be assisted by mechanical shear connectors or it has to be demonstrated by tests that no significant slip occurs.
The knowledge regarding the forces in steel components and that for the reinforced concrete components is necessary in order to check the bond stresses. The exact determination of these components is very complicated, as all different stress and stiffness situations along the column length must be considered (elastic, partial plastic and full plastic regions). This may be carried out by Finite Element programs, which shall include the deformation behaviour of the bond area. This deformation behaviour has to be checked in tests beforehand.
For practical use, Eurocode 4 allows the determination of the bond stresses based on elastic behaviour of the section. Another method is to calculate the forces in the bond area due to the change in the forces in steel and reinforced concrete between critical cuts of the column. Fig. 22 shows an example of those cuts for a load introduction region. From the differences of the load components above and below the connection, the forces acting in the bond area can be determined and the number of mechanical connectors can be checked.
The design of the cross-section parts for shear can be made according to the chapter 3.7.

4.2 Distribution of the internal forces and moments

In the ultimate limit state, the distribution of the components may be calculated on the basis of the plastic bearing capacities of the relevant cross-section parts. For pure axial loads, the steel component of the total normal force can be determined by means of the eqn. 68. The component for the reinforced concrete can then be derived from eqn. 69.

$$\frac{N_{a.Sd}}{N_{Sd}} = \frac{N_{a.Rd}}{N_{pl.Rd}} = \delta = \frac{A_a\, f_{yd}}{A_a\, f_{yd} + A_c\, f_{cd} + A_s\, f_{sd}} \tag{68}$$

where f_{yd}, f_{cd} and f_{sd} are the design strengths given above.

$$N_{c+s.Sd} = N_{Sd} - N_{a.Sd} \tag{69}$$

The loading components for pure bending may be determined following the same procedure (eqn. 70). The components of the moment of the resistance can be derived from the stress

@Seismicisolation

@Seismicisolation

distribution for $M_{pl.Rd}$. The sum of the components is again equal to the total bending moment (eqn. 71).

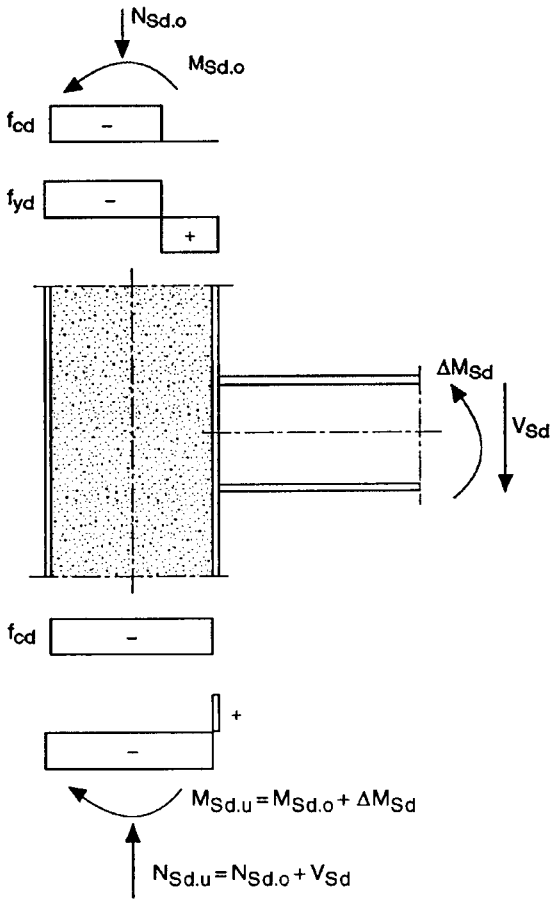

Fig. 22 – Difference of forces in a load introduction region - plastic stress distribution

$$\frac{M_{a.Sd}}{M_{Sd}} = \frac{M_{a.Rd}}{M_{pl.Rd}} \quad \text{and} \quad \frac{M_{c+s.Sd}}{M_{Sd}} = \frac{M_{c.Rd} + M_{s.Rd}}{M_{pl.Rd}} \tag{70}$$

$$M_{pl.Rd} = M_{a.Rd} + M_{c.Rd} + M_{s.Rd} \tag{71}$$

Generally, the combinations of the internal forces and moments N_{Sd} and M_{Sd} act on the column, so that the interaction between $N_{pl.Rd}$ and $M_{pl.Rd}$ has to be observed. The components of the cross-sections may be determined for any combination of N_{Rd} and M_{Rd}. In the case of introducing the forces from the steel to the concrete part (the most common way of a connection) the maximum differences of forces may be taken for the design of the bond area, which lies on the safe side. The maximum difference of normal forces results at the interaction point – $N_{pl.Rd}$ – (eqn. 68, 69), while the maximum difference of bending moments occurs at the point of the maximum bending moment resistance – $M_{max.Rd}$ – (eqn. 72). These values may be determined easily as shown in the chapters 3.5 and 3.6.

@Seismicisolation

@Seismicisolation

$$\frac{M_{a.Sd}}{M_{Sd}} = \frac{M_{a.Rd}}{M_{pl.Rd}} = \frac{W_{pa}\, f_{yd}}{W_{pa}\, f_{yd} + \frac{1}{2}\, W_{pc}\, f_{cd} + W_{ps}\, f_{sd}} \tag{72}$$

$$M_{c+s.Sd} = M_{Sd} - M_{a.Sd} \tag{73}$$

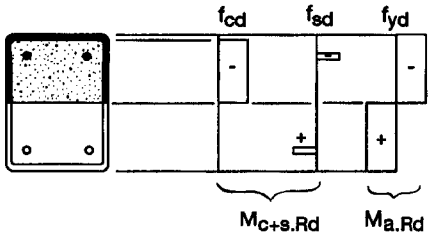

Fig. 23 – Example for the plastic components of the internal forces

The determination of the distribution values for the loads and moments on the basis of the plastic resistances may be carried out only if the mechanical shear connectors show a ductile behaviour in the load deflection curve. These ductile requirements generally are fulfilled by headed studs.

4.3 Regions of load introduction

If concentrated loads are introduced into the column, it should be ensured that all cross-section parts of the composite column are loaded according to their capacities below the introduction length l_e. This load introduction length is given in eqn. 74.

$$l_e \leq 2d \tag{74}$$

where d is the smaller one of the two overall dimensions of the cross-section

For composite columns with a storey height column length, the loads are generally introduced by head-plates, which serve as framework during the casting. The loads are transferred by contact into the steel and the concrete part of the section.
A hole may occur in the concrete below the head-plate after the hollow section is filled with concrete. The steel section may thereby be overloaded because of the stiffness of the plate. The steel part will then plastify until the concrete takes the component of the load according to its capacity.

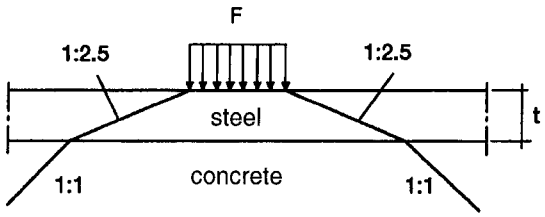

Fig. 24 – Stress distribution in steel and concrete

@Seismicisolation

@Seismicisolation

Example for the behaviour of buildings with reinforced concrete columns under the South Hyogo Earthquake of January 17, 1995 in Japan. The building collapsed up to the third storey.

Typical collapse of a building with reinforced concrete columns in the South Hyogo Earthquake in Japan. One mid-story is totally destroyed.

@Seismicisolation

@Seismicisolation

If the loading area above the plate is smaller than the column cross section, a load distribution in the steel and concrete according to fig. 24 can be taken into account.
In case the dimension of the hollow section is large enough, shear connectors may be applied within the hollow section for continuous concrete filled columns. Otherwise, connections can be fixed only on the outer wall of the section. The load introduction into the wall of the hollow section columns without a connection to the concrete core may work only for smaller loads. In order to introduce larger forces, a simple and very effective connection has been designed (fig. 25). The plate is inserted through the steel section,which ensures the loading of the concrete. The stresses below the inserted plate can reach very high values, because the concrete is confined by the steel profile. Tests have shown that this confinement is active for axial as well as for eccentrical loads. Fig. 26 as well as the equations 74 and 75 show a design proposal based on the tests.

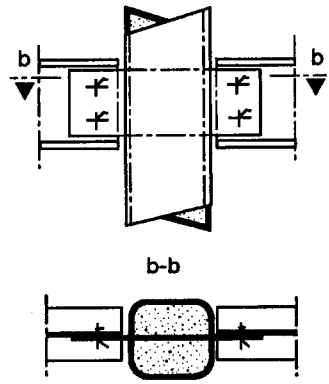

Fig. 25 – Load introduction into hollow sections by inserted plates

$$f_{u1.Rd} = (f_{ck} + 35.0)\ \frac{1}{\gamma_c}\ \sqrt{\frac{A_c}{A_1}} \qquad (75)$$

where A_c is the area of the concrete core of the column,
A_1 is the area below the plate,
f_{ck} is the characteristic concrete strength in N/mm^2,
γ_c is the material safety factor for concrete ($\gamma_c = 1.5$),

$$f_{u1.Rd} \leq \frac{N_{pl.c.Rd}}{A_1} \quad \text{and} \quad \frac{A_c}{A_1} \leq 20 \qquad (76)$$

@Seismicisolation

@Seismicisolation

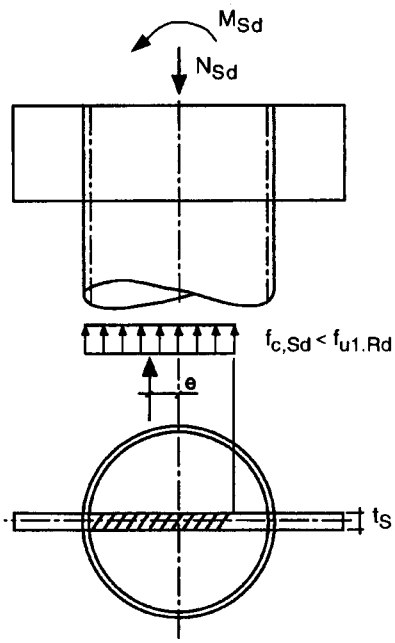

Fig. 26 – Design proposal for connections with inserted plates

@Seismicisolation

@Seismicisolation

5 Special problems

5.1 Mono-symmetrical sections

Concrete filled sections may be built mono-symmetrically in order to have conduits within the column section (fig. 27a). The simplified design method for composite columns with hollow sections may also be applied to mono-symmetrical sections with a few modifications. A method is given in the appendix of Eurocode 4. The more simple and economic way for the design is to cut the section as a symmetrical section. Another hole may be assumed in the design for example, and the column section may be treated as a symmetrical one (fig. 27b).

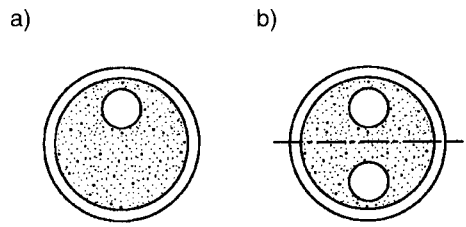

Fig. 27 – Example for mono-symmetrical composite sections

5.2 Preloaded steel columns

It may be economical to erect a building as a pure steel construction and to fill in the concrete later. The columns then have a smaller weight than the composite ones and the erection can be carried out rather fast. The steel column bears the loads in the erection situation. The tests with columns, which were built up to a composite column under load with a preloading of about 70% of the steel column, have shown that the preloading of the pure steel column may influence the load capacity of the composite column.
The deflection of the steel column under the load is fixed by the hardening concrete. This could be used as a design parameter for those columns. The deflection of the steel column under its load should be taken into account while calculating the bending moments of the column.

5.3 Partially filled columns

Partial filling describes the situation in which the column is not filled with concrete over the total length. These columns may be built in order to have connection facilities in the pure steel region, which are more simple. They can be designed considering the relevant buckling lengths, which result from the distribution of the stiffnesses (with or without concrete) over the column length. The tests and theoretical investigations have shown that the load bearing capacity of the column is negligibly influenced, if the part of the pure steel partition does not exceed 20% of the total column length. Another application of partial concreting is to fill the connection regions of trusses made of hollow sections. A CIDECT research program dealt with this solution [15].

@Seismicisolation

@Seismicisolation

View of the buildings after carthquake on the road with the bank office building shown in page 53.

5.4 Special concrete

Only a few investigations are known with columns filled with special concrete. Steel fibre reinforced concrete has been used in some of them. This is of small advantage, because the compression strength is comparable to that of normal weight concrete. The higher tension capacity of the concrete is not necessary for the concrete filled sections in normal design situations. The tests under fire situations demonstrated higher resistances when steel fibre reinforced concrete was used.
The use of high strength concrete in the steel hollow sections is now under investigation. The general investigation with high strength concrete has shown that the tension capacity of the concrete is not enlarged in the same way as the compression capacity. For the concrete filled hollow sections, the tension problem is not so important, as the concrete cannot split away. So the full advantage of the high compression strength can be obtained from these concrete filled sections. Design proposals are not yet available. In [10] the results of 23 stub-column tests and also of 23 tests on slender columns are given. All specimens in this case are concrete filled rectangular hollow sections. The evaluation of these tests with the method of Eurocode 4 confirms that the EC4-method is on the safe side for hollow sections filled with high strength concrete. Similar results have been found in a CIDECT research program [11], where the confinement effects in concrete filled circular hollow sections could be verified also for high strength concrete. Additionally it could be shown that the design method for the load introduction according to eqn. 75 does also work for high strength concrete.

@Seismicisolation

@Seismicisolation

Branch bank office building in the central area of Kobe after the South Hyogo Earthquake of January 17, 1995 in Japan. Concrete filled hollow section columns were used for the peripherical columns. Although this building stands near the centre of the earthquake, it was not damaged. This and four other buildings with those columns demonstrate the superior resistance of concrete filled hollow section columns to earthquake.

@Seismicisolation

@Seismicisolation

6 Design for seismic conditions

Strong earthquakes are rare events. When they occur, the yield strength of a typical frame structure is often exceeded and plastic mechanisms form (e.g.: rotating plastic hinges). In a sophisticated earthquake resistant design, two questions are taken into consideration and need to be checked.

1. *Is the structure able to resist the earthquake loading or does it collapse, because the ductility capacity (or supply) is smaller than the ductility demand?*
2. *Is the maximum deformation during the earthquake response sufficiently small, so that an adequate degree of reliability against unacceptable damage can be ensured?*

The consideration of these two aspects, which are denoted as *strength and ductility* and *limitation of deformation* in the following, are of basic importance in the course of each earthquake resistant design.

Most structural damages are due to the use of an unsuitable structural type or to the use of non-ductile materials, probably of a poor quality. Furthermore, a proper detailing plays an important role. As for the aspect of *strength and ductility*, the structural layout should strictly follow the principles of the "capacity design method", a method which is also mentioned in Eurocode 8 [16]. Thus, a basic requirement for an optimum overall energy dissipation, mainly by means of hysteretic energy due to plastic reversal stressing, is guaranteed. The "capacity design method" can be characterized as follows ([17], [18]): *"In a structure, the plastified regions are deliberately chosen, and correspondingly designed and detailed, so that they are sufficiently ductile. The other regions are given a higher structural strength (capacity) than the plastified ones, in order that they always remain elastic. In this way it is guaranteed that the chosen mechanisms, even in the case of large structural deformations, always remain functional for energy dissipation."*

In order to meet the requirements of a reasonable *limitation of deformation*, a sufficient load carrying capacity, but above all a high structural stiffness needs to be provided.

For each type of frame structure, the formation of plastic hinges in the columns should be avoided as far as possible and other mechanisms, such as plastic hinges in the beams or plastic shear mechanisms in eccentric braced frames, should mainly contribute to the overall energy dissipation. The importance of complying with the "weak beam-strong column-concept" is demonstrated by the example of the multi-storey moment resisting frame shown in fig. 28. On the one hand, it can be seen that many plastic hinges in the ("weak") beams lead to a good-natured behaviour combined with an excellent energy dissipation (fig. 28a). On the other hand, it can be observed that the dangerous "soft-storey-mechanism" with only four plastic hinges in the ("weak") columns leads to a poor energy dissipation and a much higher ductility demand $(\theta_2 \gg \theta_1)$ with the same maximum displacement v_{max} (fig. 28b).

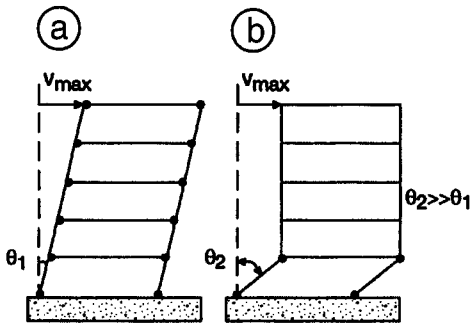

Fig. 28 – Comparison of a favourable with an unfavourable hinge-mechanism [17]

@Seismicisolation

@Seismicisolation

However, even in the case where the structural layout complies with the "weak beam – strong column – concept", fig. 28a demonstrates that plastic hinges in the columns occur directly above the fixed support at the base of the frame. Moreover, plastic hinges in the columns can be allowed at the top floor of multistorey buildings or for one storey buildings. Thus, it is evident that an investigation of the cyclic plastic behaviour and energy dissipating behaviour connected therewith, is necessary.
Numerous tests, in order to investigate the behaviour of composite columns with concrete filled hollow sections under both monotonically increasing loading and cyclic loading, have been performed. They demonstrate that especially this type of structural element possesses an excellent ductility and an extremely good energy dissipating behaviour. Fig. 29 shows one example (square hollow section).
Composite columns with concrete filled hollow sections will never be the weakest point in a structure under severe earthquake loading if, in addition to the "weak beam - strong column - concept", some other simple design criteria and detailing rules are complied with. Depending upon the structural type, such design criteria and detailing rules can be found in Eurocode 8.
Steel-concrete composite frame structures are particularly qualified to sustain severe earthquake loading, if designed and detailed properly. Supplied with a high ductility and an excellent energy dissipating behaviour, a technically matured and moreover an economical product can be found. Composite columns with concrete filled hollow sections are especially able to achieve this.

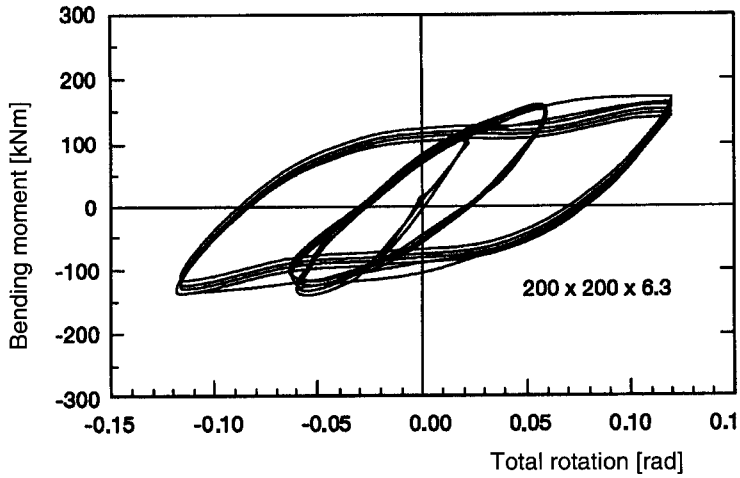

Fig. 29 – Cyclic moment-rotation relations for ⌹ 200x200x6.3

@Seismicisolation

@Seismicisolation

7 References

[1] CIDECT Monograph No. 1: Concrete filled hollow section steel columns design manual, British edition, Imperial units, CIDECT, 1970 .

[2] CIDECT Monograph No. 5 – Calcul des Poteaux en Profiles Creux remplis de Béton, Fascicule 1 – Méthode de Calcul et Technologie de mise en œuvre, Fascicule 2 – Abaque de calcul, CIDECT, 1979.

[3] Twilt, L., Hass, R., Klingsch, W., Edwards, M., Dutta, D.: Design guide for structural hollow section columns exposed to fire, CIDECT series "Construction with hollow steel sections", ISBN 3-8249-0171-4, Verlag TÜV Rheinland, Köln,1994.

[4] Eurocode No. 4: Design of Composite Steel and Concrete Structures, Part 1.1: General Rules and Rules for Buildings, ENV 1994-1-1: 1992.

[5] Rondal, J., Würker, K.-G., Dutta, D., Wardenier, J., Yeomans, N.: Structural stability of hollow sectios, CIDECT series "Construction with hollow steel sections", ISBN 3-8249-0075-0, Verlag TÜV Rheinland, Köln,1992.

[6] Roik, K. and Bergmann, R.: Composite Columns, Constructional Steel Design: An International Guide, Chapter 4.2, Elsevier Science Publishers Ltd, UK, 1990.

[7] AIJ Standards for Structural calculation of Steel Reinforced Concrete Structures, Architectural Institute of Japan, 1987.

[8] Canadian Standards Association, CAN/CSA-S16.1-94, Limit States Design of Steel Structures, Toronto, 1994.

[9] Bridge, R.Q., Pham, L., Rotter, J.M.: Composite Steel and Concrete Columns – Design and Reliability, 10th Australian Conference on the Mechanics of Structures and Materials, University of Adelaide, 1986.

[10] Grauers, M.: Composite Columns of Hollow Sections Filled with High Strength Concrete, Chalmers University of Technology, Göteborg, 1993.

[11] Bergmann, R.: Load introduction in composite columns filled with High strength concrete, Proceedings of the 6th International Symposium on Tubular Structures, Monash University, Melbourne, Australia, 1994.

[12] Australian Standard AS4100-1990, Steel Structures, 1990.

[13] Eurocode No. 3: Design of Steel Structures, Part 1.1: General Rules and Rules for Buildings, ENV 1993-1-1: 1992.

[14] Eurocode No. 2: Design of Concrete Structures, Part 1: General Rules and Rules for Buildings, Final Draft 1990.

[15] Packer, J.A.: Concrete-Filled HSS Connections, Journal of Structural Egineering, Vol. 121, No. 3, March 1995.

[16] Eurocode No. 8: Structures in Seismic Regions, Design, Part 1 – General and Building, 1988.

[17] Bachmann, H.: Earthquake Actions on Structures, Bericht Nr.195, Institut für Baustatik und Konstruktion, ETH Zürich, 1993.

[18] Paulay, T., Bachmann, H., Moser, K.: Erdbebenbemessung von Stahlbetonhochbauten, Birkhäuser Verlag, Basel/Boston/Berlin, 1992.

@Seismicisolation

@Seismicisolation

8 Design examples

8.1 Concrete-filled circular hollow section with reinforcement

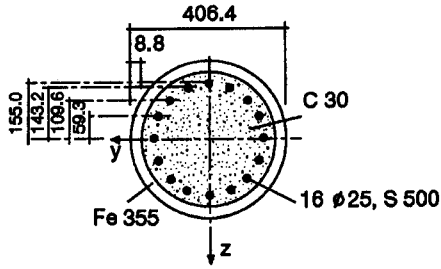

- assumptions for the analysis:

$\bar{\lambda}$ = 0.15
N_{Sd} = 6000 kN
$M_{max.Sd}$ = 60 kNm

- strengths:

f_{yd} = 275.0/1.1 = 250.0/Nmm^2 = 25.0 kN/cm^2
f_{sd} = 500.0/1.15 = 434.8/Nmm^2 = 43.5 kN/cm^2
f_{cd} = 30.0/1.5 = 20.0/Nmm^2 = 2.00 kN/cm^2

- cross sectional areas:

A_a = 110.0 cm^2
A_s = 78.5 cm^2
A_c = $\pi \cdot 40.64^2/4 - 110.0 - 78.5 = 1108.7$ cm^2

- reinforcement ratio (for fire design):

$\rho = 78.5/(\pi \cdot 40.64^2/4 - 110.0) = 6.6\% > 4\%$
the ratio of reinforcement ρ has to be limited to 4% for the calculation. This may be achieved by:
– assuming reduced diameters of the reinforcement in the claculation

$$d_{red} = \sqrt{\frac{(\pi \cdot 40.64^2/4 - 110.0) \cdot 0.04 \cdot 4}{16\ \pi}} = 1.94 \text{ cm} = 19.4 \text{ mm}$$

– considering only reinforcing bars which lie in favourable position of the section so that $\rho \leq 4\%$.

Here the second proposal is taken. The outer and the next following two layers of reinforcement are considered:

$A_s = 10 \cdot 4.91 = 49.1$ cm^2
$A_c = \pi \cdot 40.64^2/4 - 110.0 - 49.1 = 1138.1$ cm^2
$\rho = 49.1/(\pi \cdot 40.64^2/4 - 110.0) = 4.1\% \approx 4\%$
$N_{pl.Rd} = 110.0 \cdot 25.0 + 49.1 \cdot 43.5 + 1138.1 \cdot 2.0 = 7162$ kN (eqn. 8)
$0.2 < \delta = 110.0 \cdot 25.0/7162.1 = 0.38 < 0.9$ (eqn. 10)

@Seismicisolation

@Seismicisolation

- check of local buckling:

$$\frac{d}{t} = \frac{406.4}{8.8} = 46.2 < 60 \qquad \text{(table 4)}$$

- confinement effects:

$$\eta_{10} = 4.9 - 18.5 \cdot 0.15 + 17 \cdot 0.15^2 = 2.508 \qquad \text{(eqn. 14)}$$
$$\eta_{20} = 0.25 \cdot (3 + 2 \cdot 0.15) = 0.825 \qquad \text{(eqn. 15)}$$

$$\frac{e}{d} = \frac{M_{max.Sd}}{N_{sd}\, d} = \frac{60 \cdot 100}{6000 \cdot 40.64} = 0.025 \qquad \text{(eqn. 16)}$$

$$\eta_1 = 2.508 \cdot (1 - 10 \cdot 0.025) = 1.881 \qquad \text{(eqn. 12)}$$
$$\eta_2 = 0.825 + (1 - 0.825) \cdot 10 \cdot 0.025 = 0.869 \qquad \text{(eqn. 13)}$$

$$N_{pl.Rd} = 110.0 \cdot 25.0 \cdot 0.869 + 1138.1 \cdot 2.0 \left(1 + 1.881 \frac{8.8}{406.4} \frac{27.5}{3.0}\right)$$
$$+ 49.1 \cdot 43.5 = 7651.6 \text{ kN} \qquad \text{(eqn. 11)}$$

increase in the bearing capacity caused by confinement: 7651.6/716.1 = 1.07 = 7%

8.2 Concrete-filled rectangular hollow section with eccentric loading

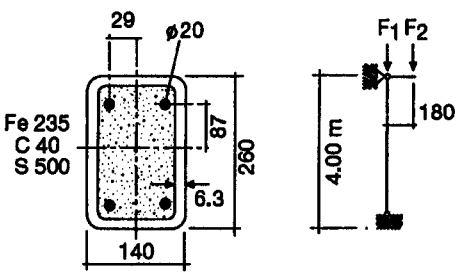

- assumptions for the analysis:

F_1 = 1000 kN
F_2 = 300 kN
M_{Sd} = 0.18 · 300 = 54 kNm
permanent load = 70% of the total load

- strengths:

f_{yd} = 235.0/1.1 = 213.6/Nmm^2 = 21.4 kN/cm^2
f_{sd} = 500.0/1.15 = 434.8/Nmm^2 = 43.5 kN/cm^2
f_{cd} = 40.0/1.5 = 26.7/Nmm^2 = 2.67 kN/cm^2

- cross sectional areas:

A_a = 47.8 cm^2
A_s = 12.6 cm^2
A_c = (26.0 – 2 · 0.63) (14.0 – 2 · 0.63) – 12.6 = 302.6 cm^2 (neglecting the roundings off)

- squash load:

$$N_{pl.Rd} = 47.8 \cdot 21.4 + 302.6 \cdot 2.67 + 12.6 \cdot 43.5 = 2379.0 \text{ kN} \qquad \text{(eqn. 8)}$$

@Seismicisolation

@Seismicisolation

$0.2 < \delta = 47.8 \cdot 21.4/2379.0 = 0.43 < 0.9$ (eqn. 10)

- ratio of reinforcement:

$$\rho = \frac{12.6}{(26.0 - 2 \cdot 0.63)\,(14.0 - 2 \cdot 0.63)} = 0.04 = 4.0\%$$

- moments of inertia for bending about the y-axis:

$I_a = 4260\ cm^4$

$I_s = 12.6 \cdot 8.7^2 = 954\ cm^4$

$$I_c = \frac{12.74 \cdot 24.74^3}{12} - 954 = 15122\ cm^4$$ (neglecting the roundings off)

- moments of inertia for bending about the z-axis:

$I_a = 1630\ cm^4$

$I_s = 12.6 \cdot 2.9^2 = 106\ cm^4$

$$I_c = \frac{24.74 \cdot 12.74^3}{12} - 106 = 4157\ cm^4$$ (neglecting the roundings off)

- check of local buckling:

$$\frac{h}{t} = \frac{260}{6.3} = 41.3 < 52$$ (table 4)

■ check for the weak axis (axial compression):

- effective stiffness:

$$(EI)_e = 21000\,(1630 + 106) + 0.8\,\frac{3500}{1.35}\,4157 = 45.1 \cdot 10^6\ kN/cm^2$$ (eqn. 22)

- buckling load:

$$N_{cr} = \frac{45.1 \cdot 10^6 \cdot \pi^2}{400^2} = 2782\ kN$$ (eqn. 21)

- relative slenderness:

$$\bar{\lambda} = \sqrt{\frac{47.8 \cdot 23.5 + 302.6 \cdot 4.0 + 12.6 \cdot 50.0}{2782.0}} = 1.032$$ (eqn. 20)

- buckling curve a:

$\chi = 0.644$ (table 7)

- check for creep and shrinkage:

$$\bar{\lambda}_{lim} = \frac{0.8}{1 - 0.43} = 1.4 > 1.032$$ $\Rightarrow$ no influence on the bearing capacity (eqn. 25)

- check for bearing capacity

$N_{Sd} = 1300\ kN < 0.644 \cdot 2379.0 = 1532.1\ kN$

@Seismicisolation

@Seismicisolation

■ check for the strong axis (compression and bending):

□ determination of χ

○ effective stiffness:

$$(EI)_e = 21000\ (4260 + 954) + 0.8\ \frac{3500}{1.35}\ 15122 = 140.9 \cdot 10^6\ \text{kN cm}^2 \qquad \text{(eqn. 22)}$$

○ buckling load:

$$N_{cr} = \frac{140.9 \cdot 10^6 \cdot \pi^6}{400^2} = 8691.4\ \text{kN} \qquad \text{(eqn. 21)}$$

○ relative slenderness:

$$\bar{\lambda} = \sqrt{\frac{47.8 \cdot 23.5 + 302.6 \cdot 4.0 + 12.6 \cdot 50.0}{8691.4}} = 0.584 < \bar{\lambda}_{lim} \qquad \text{(eqn. 20)}$$

○ buckling curve a:

$$\chi = 0.896 \qquad \text{(table 7)}$$

□ cross-section interaction curve:

○ plastic section moduli (neglecting the roundings off)

$$W_{ps} = 12.6 \cdot 8.7 = 109.6\ \text{cm}^3 \qquad \text{(eqn. 36)}$$

$$W_{pc} = \frac{12.74 \cdot 24.74^2}{4} - 109.6 = 1839.8\ \text{cm}^3 \qquad \text{(eqn. 32)}$$

$$W_{pa} = \frac{14.0 \cdot 26.0^2}{4} - 1839.8 - 109.6 = 416.6\ \text{cm}^3 \qquad \text{(eqn. 33)}$$

○ interaction point D:

$$M_{D.Rd} = 416.6 \cdot 21.4 + \frac{1}{2}\ 1839.8 \cdot 2.67 + 109.6 \cdot 43.5 = 16138.9\ \text{kNcm} \qquad \text{(eqn. 30)}$$

$$N_{D.Rd} = \frac{1}{2}\ 302.6 \cdot 2.67 = 404.0\ \text{kN} \qquad \text{(eqn. 31)}$$

○ interaction point C and B:

$$N_{C.Rd} = 2\ N_{D.Rd} = N_{pl.c.Rd} = 808.0\ \text{kN}$$

it is assumed that no reinforcement lies within the region of 2 h_n ($A_{sn} = 0.0$)

$$h_n = \frac{808.0}{2 \cdot 14.0 \cdot 2.67 + 4 \cdot 0.63\ (2 \cdot 21.4 - 2.67)} = 4.59\ \text{cm} \qquad \text{(eqn. 37)}$$

the assumption for A_{sn} is verified

○ plastic section moduli of the cross sectional areas in the region of 2 h_n = 9.18 cm:

$$W_{psn} = 0.0$$

$$W_{pcn} = (14.0 - 2 \cdot 0.63) \cdot 4.59^2 = 268.4\ \text{cm}^3 \qquad \text{(eqn. 40)}$$

$$W_{pan} = 2 \cdot 0.63 \cdot 4.59^2 = 26.5\ \text{cm}^3 \qquad \text{(eqn. 41)}$$

$$M_{n.Rd} = 26.5 \cdot 21.4 + \frac{1}{2}\ 268.4 \cdot 2.67 = 925.4\ \text{kNcm} \qquad \text{(eqn. 39)}$$

@Seismicisolation

@Seismicisolation

$$M_{pl.Rd} = M_{B.Rd} = 16138.9 - 925.4 = 15213.5 \text{ kNcm} \qquad \text{(eqn. 38)}$$

- interaction point E:

It is proposed in the chapter 3.6 to look for another point between C and A of the polygonal interaction curve. This would lead to a value of h_E, which touches the reinforcement, so that the relevant equations will be rather difficult and complicated. It is easier to fix the stress neutral axis. Here it is laid on the outer border of the reinforcement:

$$h_E = 8.7 + \frac{2.0}{2} = 9.7 \text{ cm}$$

$$\Delta h_E = h_E - h_n = 9.7 - 4.59 = 5.11 \text{ cm}$$

additional force $\Delta N_{E.Rd}$ achieved from the compressed area of b Δh_E:

$$\Delta N_{E.Rd} = b\Delta h_E f_{cd} + 2t\Delta h_E \ (2f_{yd} - f_{cd}) + \Delta A_s (2f_{sd} - f_{cd})$$

$$\Delta N_{E.Rd} = 14.0 \cdot 5.11 \cdot 2.67 + 1.26 \cdot 5.11 \ (2 \cdot 21.4 - 2.67) + 6.28 \ (2 \cdot 43.5 - 2.67)$$
$$= 979.0 \text{ kN}$$

$$N_{E.Rd} = \Delta N_{E.Rd} + N_C = 979.0 + 807.9 = 1786.9 \text{ kN}$$

plastic section moduli from the section with the depth 2 h_E

$$W_{psE} = W_{ps} = 109.6 \text{ cm}^3$$

$$W_{pcE} = (b - 2t) \ h_E^2 - W_{psE} = 12.74 \cdot 9.7^2 - 109.6 = 1089.1 \text{ cm}^3 \qquad \text{(eqn. 40)}$$

$$W_{paE} = 2th_E^2 = 1.26 \cdot 9.7^2 = 118.6 \text{ cm}^3 \qquad \text{(eqn. 41)}$$

$$\Delta M_{E.Rd} = W_{paE} \ f_{yd} + \frac{1}{2} W_{pcE} \ f_{cd} + W_{psE} \ f_{sd} \qquad \text{(eqn. 39)}$$

$$\Delta M_{E.Rd} = 118.6 \cdot 21.4 + \frac{1}{2} 1089.1 \cdot 2.67 + 109.6 \cdot 43.5 = 8759.5 \text{ kNcm}$$

$$M_{E.Rd} = M_{D.Rd} - \Delta M_{E.Rd} = 16138.9 - 8759.5 = 7379.4 \text{ kNcm} \qquad \text{(eqn. 38)}$$

- non-dimensional interaction curve

$$\frac{N_{A.Rd}}{N_{pl.Rd}} = 1.0; \qquad \frac{N_{B.Rd}}{N_{pl.Rd}} = 0.0;$$

$$\frac{N_{C.Rd}}{N_{pl.Rd}} = \frac{808.0}{2379.0} = 0.34; \qquad \frac{N_{D.Rd}}{N_{pl.Rd}} = \frac{404.0}{2379.0} = 0.17;$$

$$\frac{N_{E.Rd}}{N_{pl.Rd}} = \frac{1786.9}{2379.0} = 0.75;$$

$$\frac{M_{A.Rd}}{M_{pl.Rd}} = 0.0; \qquad \frac{M_{B.Rd}}{M_{pl.Rd}} = 1.0;$$

$$\frac{M_{C.Rd}}{M_{pl.Rd}} = 1.0; \qquad \frac{M_{D.Rd}}{M_{pl.Rd}} = \frac{16138.9}{15213.5} = 106;$$

$$\frac{M_{E.Rd}}{M_{pl.Rd}} = \frac{7379.4}{15213.5} = 0.49;$$

@Seismicisolation

@Seismicisolation

- internal forces according to first order theory

  $N_{Sd} = 1300$ kN; max $M_{Sd} = 54$ kNm

- check for the second order theory

  $\bar{\lambda}_{lim} = 0.2\ (2 - r) = 0.4 < \bar{\lambda} = 0.584$ (eqn. 56; r = 0)

  $\frac{N_{Sd}}{N_{cr}} = \frac{1300.0}{8691.4} = 0.15 > 0.1$ (eqn. 57)

- k-factor for the second order theory:

  $k = \frac{0.66}{1 - \frac{1300.0}{8691.2}} = 0.77 < 1.0$ with $r = 0 \Rightarrow \beta = 0.66$ (eqn. 65)

  the end moment is the maximum moment (k = 1.0)

- check for compression and uniaxial bending

  $\chi_n = \chi \frac{1 - r}{4} = 0.90 \frac{1 - 0}{4} = 0.22$ (eqn. 51)

  $\chi_d = \frac{1300.0}{2379.0} = 0.55$

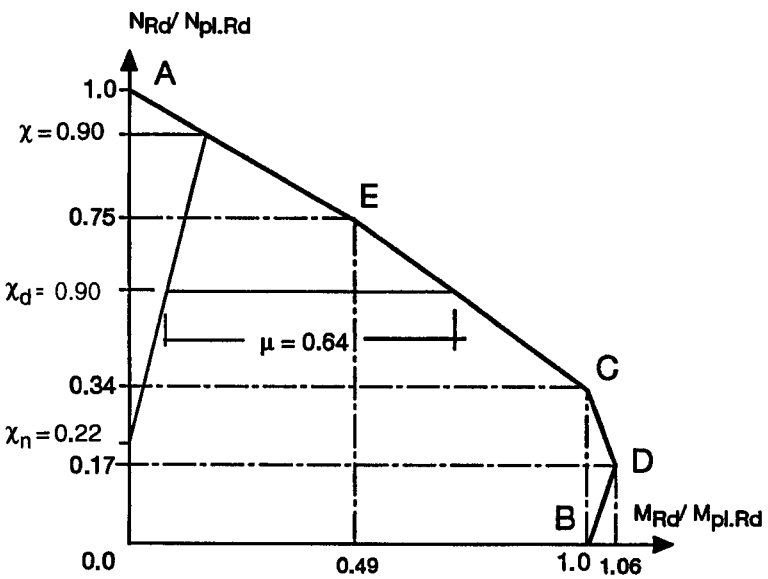

from the interaction curve:

$\mu = 0.64$

$M_{Sd} = 54$ kNm $< M_{Rd} = 0.9 \cdot 0.64 \cdot 152.14 = 87.6$ kNm

- shear (it is assumed that the shear is borne by the steel section alone)

  $V_{Sd} = \frac{M_{Sd}}{l} = \frac{54.0}{4.0} = 13.5$ kN

@Seismicisolation

@Seismicisolation

- shear area

$$A_V = 2\ (26.0 - 0.63)\ 0.63 = 32.0\ cm^2$$

- plastic shear resistance

$$V_{pl.Rd} = \frac{32.0 \cdot 21.4}{\sqrt{3}} = 395.4\ kN \qquad \text{(eqn. 47)}$$

$$V = 13.5\ kN \ll \frac{V_{pl.Rd}}{2} = 197.7\ kN$$

no influence of shear on the bearing capacity

- alternative solution for combined compression and bending by means of diagrams and tables

the determination of χ and M_{Sd} has to be carried out like given above, the calculation of the interaction curve is replaced by the use of diagrams:

- determination of $M_{pl.Rd}$ by means of table 10:

$$\frac{h}{b} = \frac{260}{140} = 1.86 \approx 2.0; \qquad \frac{h}{t} = 41.3$$

for Fe235 and C40:

$m_\square = 1.1385$ for $h/t = 40$ and $m_\square = 1.1753$ for $h/t = 50$ $\Rightarrow m_\square = 1.143$ for $h/t = 43$

$$M_{pl.Rd} = m_\square \cdot \frac{26.0^2 \cdot 14.0 - (26.0 - 2 \cdot 0.63)^2\,(14.0 - 2 \cdot 0.63)}{4}\ 21.36 \qquad \text{(eqn. 27)}$$

$$M_{pl.Rd} = 1.143 \cdot 416.57 \cdot 21.36 = 10170.3\ kNcm = 101.7\ kNm$$

contribution of the reinforcement:

$$\Delta M_{pl.Rd} = \sum_{i=1}^{n} A_{si}\ e_i\,(f_{sd} - f_{cd})$$

$$\Delta M_{pl.Rd} = 12.6 \cdot 8.7 \cdot (43.48 - 2.67) = 4473.6\ kNcm = 44.7\ kNm$$

$$M_{pl.Rd} = 101.7 + 44.7 = 146.4\ kNm$$

- determination of μ by means of fig. 9:

with $\chi = 0.896 \approx 0.90$; $\delta = 0.43$; $\chi_d = 0.55$; $\chi_n = 0.22$:

from $\delta = 0.4 \Rightarrow$ $\mu_k = 0.27$ and $\mu_d = 1.08$

from $\delta = 0.45 \Rightarrow$ $\mu_k = 0.25$ and $\mu_d = 1.00$

so for $\delta = 0.43 \Rightarrow$ $\mu_k = 0.26$ and $\mu_d = 1.03$

$$\mu = \mu_d - \mu_k \frac{\chi_d - \chi_n}{\chi - \chi_n} = 1.03 - 0.26\ \frac{0.55 - 0.22}{0.90 - 0.22} = 0.90$$

$$M_{Sd} = 54\ kNm < M_{Rd} = 0.9 \cdot 0.90 \cdot 146.4 = 118{,}6\ kNm$$

@Seismicisolation

@Seismicisolation

9 Notations

forces and moments

F	force
N	internal normal force
M	internal bending moment
V	internal shear force

indices combined with forces and moments (more than one are separated by a dot):

a	concerning the steel hollow section
c	concerning the concrete part
cr	critical, buckling load of a member
F	due to forces
f	due to initial deformations (imperfections)
pl	plastic
p	plastic
R	acting at the top or bottom of the column
Rd	design resistance
s	concerning the reinforcement
Sd	design action
y	concerning the y-axis of a section
z	concerning the z-axis of a section

cross section properties

A	area
b	width of a section (dimension in the direction of the bending axis)
h	depth of a section (dimension transverse to the direction of the bending axis)
d	diameter of a circular hollow section
t	wall thickness of the hollow section
r	corner radius of rectangular or square hollow sections
I	moment of inertia
W_p	plastic section modulus

indices combined with cross section properties (more than one are separated by a dot):

a	concerning the steel hollow section
c	concerning the concrete part
s	concerning the reinforcement
n	concerning a special region of a section
1	concerning the area below an inserted plate
V	concerning the area for shear transfer

strengths and stiffnesses

E	stiffness modulus (Young's modulus)
$(EI)_e$	effective stiffness
f	strength

indices combined with strengths and stiffnesses (more than one are separated by a dot):

a	concerning the steel hollow section
c	concerning the concrete part
cub	cube
cyl	cylinder
d	design situation
e	effective

@Seismicisolation

@Seismicisolation

k	characteristic value
s	concerning the reinforcement

lengths and eccentricities

e	eccentricity
l	length of the column
ℓ	buckling length of the column

indices combined with lengths and eccentricities (more than one are separated by a dot):

e	effective

coefficients and factors

k	coefficient for moment according to the second order theory
β	moment coefficient
γ	safety factor
δ	section parameter (steel contribution ratio)
χ	buckling reduction factor
ρ	reinforcement contribution ratio
μ	related bending capacity
η	coefficient for confinement
$\bar{\lambda}$	relative slenderness
σ	stress
τ	shear stress
ε	coefficient for local buckling
	coefficient for the second order theory
ξ	related coordinate along the column

indices combined with coefficients and factors (more than one are separated by a dot):

a	concerning the steel hollow section
c	concerning the concrete part
s	concerning the reinforcement
y	concerning the y-axis of a section
z	concerning the z-axis of a section

other notations

a	European buckling curve a
R	resistance
S	action
A,B,C,D,E	points of the polygonal interaction curve (as index: concerning the relevant points

Acknowledgement for photographs:

The authors express their appreciation to the following firms for making available the photographs used in this guide:

British Steel PLC
Mannesmannröhren-Werke AG
Nippon Steel Metal Products & Co. Ltd.
Tubeurop
Rautaruukki Oy

@Seismicisolation

@Seismicisolation

Comité International pour le Développement et l'Etude 8,5onstruction Tubuliare

International Committee for the Development and Study of Tubular Structures

CIDECT, foundet 1962 as an international association, joins together the research resources of major hollow steel section manufacturers to create a major force in the research and application of hollow steel sections worldwide.

The objectives of CIDECT are:

- to increase knowledge of hollow steel sections and their potential application by initiating and participating in appropriate researches and studies
- to establish and maintain contacts and exchanges between the producers of the hollow steel sections and the ever increasing number of architects and engineers using hollow steel sections throughout the world.
- to promote hollow steel section usage wherever this makes for good engineering practice and suitable architecture, in general by disseminating information, organizing congresses etc.
- to co-operate with organizations concerned with practical design recommendations, regulations or standards at national and international level.

Technical activities

The technical activities of CIDECT have centred on the following research aspects of hollow steel design:

- Buckling behaviour of empty and concrete-filled columns
- Effective buckling lengths of members in trusses
- Fire resistance of concrete-filled columns
- Static strength of welded and bolted joints
- Fatigue resistance of joints
- Aerodynamic properties
- Bending strength
- Corrosion resistance
- Workshop fabrication

The results of CIDECT research form the basis of many national and international design requirements for hollow steel sections.

@Seismicisolation

@Seismicisolation

CIDECT, the future

Current work is chiefly aimed at filling up the gaps in the knowledge regarding the structural behaviour of hollow steel sections and the interpretation and implementation of the completed fundamental research. As this proceeds, a new complementary phase is opening that will be directly concerned with practical, economical and labour saving design.

CIDECT Publications

The current situation relating to CIDECT publications reflects the ever increasing emphasis on the dissemination of research results.

Apart from the final reports of the CIDECT sponsored research programmes, which are available at the Technical Secretariat on demand at nominal price, CIDECT has published a number of monographs concerning various aspects of design with hollow steel sections. These are available in English, French and German as indicated.

Monograph No. 3 – Windloads for Lattice Structures (G)
Monograph No. 4 – Effective Lengths of Lattice Girder Members (E, F, G)
Monograph No. 5 – Concrete-filled Hollow Section Columns (F)
Monograph No. 6 – The Strength and Behaviour of Statically Loaded Welded Connections in Structural Hollow Sections (E)
Monograph No. 7 – Fatigue Behaviour of Hollow Section Joints (E, G)

A book "Construction with Hollow Steel Sections", prepared under the direction of CIDECT in English, French, German and Spanish, was published with the sponsorship of the European Community presenting the actual state of the knowledge acquired throughout the world with regard to hollow steel sections and the design methods and application technologies related to them.

In addition, copies of these publications can be obtained from the individual members given below to whom technical questions relating to CIDECT work or the design using hollow steel sections should be addressed.

The organization of CIDECT comprises:

- President: J. Chabanier (France)
  Vice-President: C. L. Bijl (the Netherlands)
- A General Assembly of all members meeting once a year and appointing an Executive Committee responsible for administration and executing of estabished policy
- Technical Commission and Working Groups meeting at least once a year and directly responsible for the research and technical promotion work
- Secretariat in Paris responsible for the day to day running of the organization.

@Seismicisolation

@Seismicisolation

Present members of CIDECT are:
(1995)

- British Steel PLC. United Kingdom
- EXMA, France
- ILVA Form, Italy
- IPSCO Inc., Canada
- Laminaciones de Lesaca S.A., Spain
- Laminoirs de Longtain, Belgium
- Mannesmannröhren-Werke AG, Federal Republic of Germany
- Mannstädt Werke GmbH, Federal Republic of Germany
- Nippon Steel Metal Products Co. Ltd., Japan
- Rautaruukki Oy, Finland
- Sonnichsen A/S, Norway
- Tubemakers of Australia, Australia
- Tubeurop, France
- VOEST Alpine Krems, Austria

Cidect Research Reports can be obtained through:

Mr. E. Bollinger
Office of the chairman of the CIDECT Technical Commission
c/o Tubeurop France
Immeuble Pacific
TSA 20002
92070 La Défense Cedex
Tel.: (33) 1/41258181
Fax: (33) 1/41258800

Mr. D. Dutta
Marggrafstraße 13
40878 Ratingen
Germany
Tel.: (49) 2102/842578
Fax: (49) 2102/842578

Care has been taken to ensure that all data and information herein is factual and that numerical values are accurate. To the best of our knowledge, all information in this book is accurate at the time of publication.
CIDECT, its members and the authors assume no responsibility for errors or misinterpretation of the information contained in this book or in its use.

@Seismicisolation