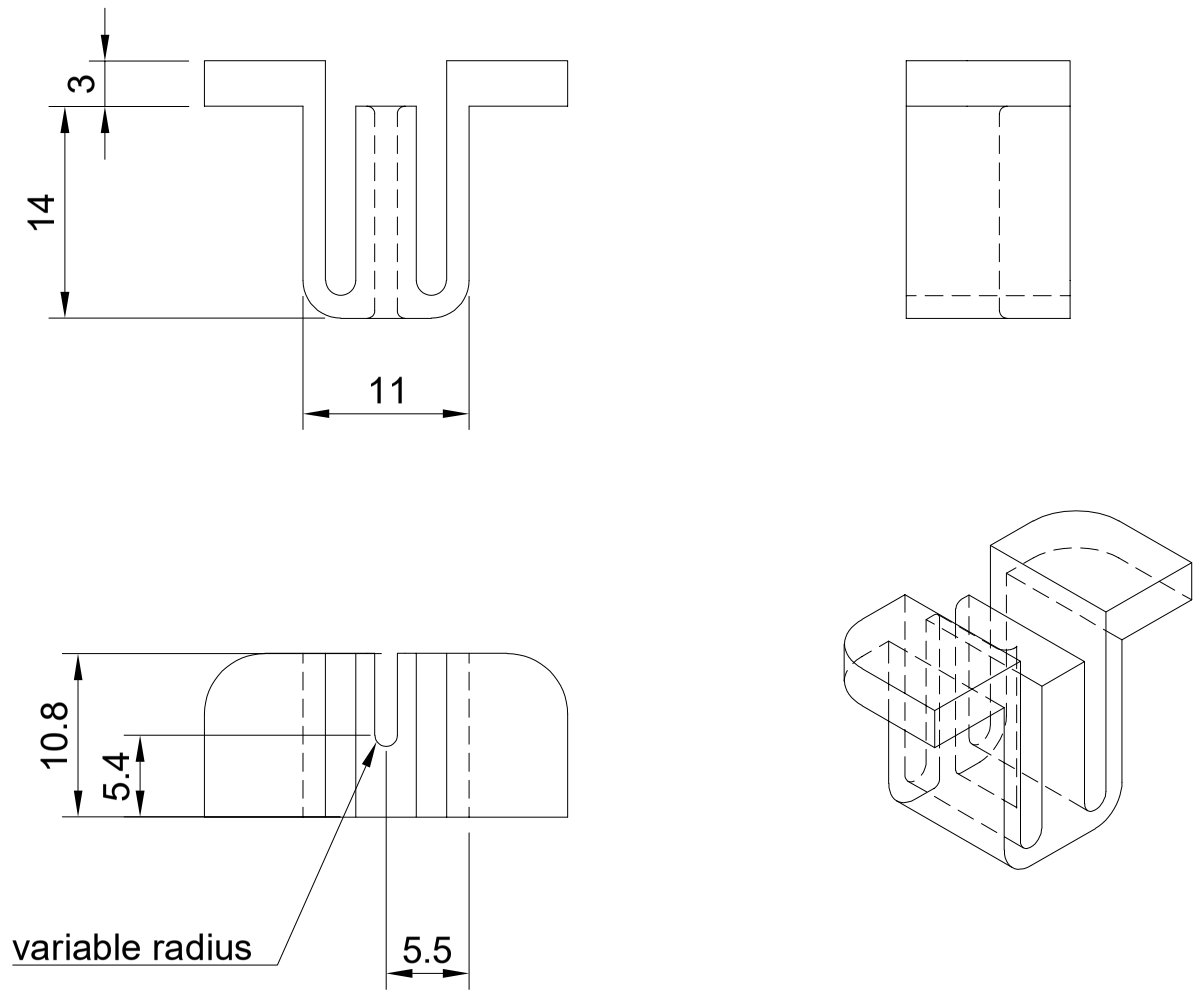

Dept.	Technical reference	Created by OpenCR Project	Approved by
		Document type	Document status
		Title Tube_coppling	DWG No.
		Rev. / Date of issue	Sheet 1/1