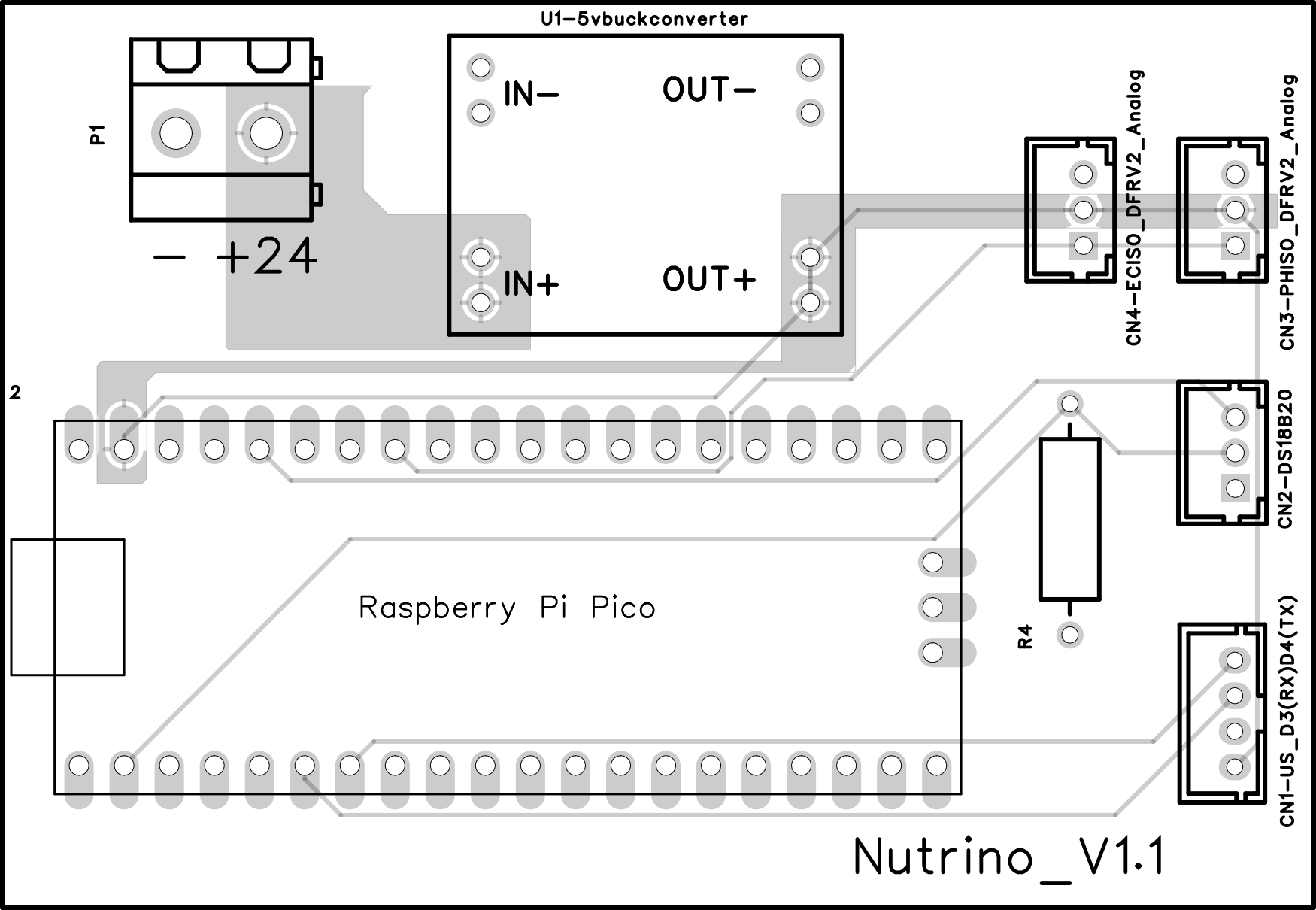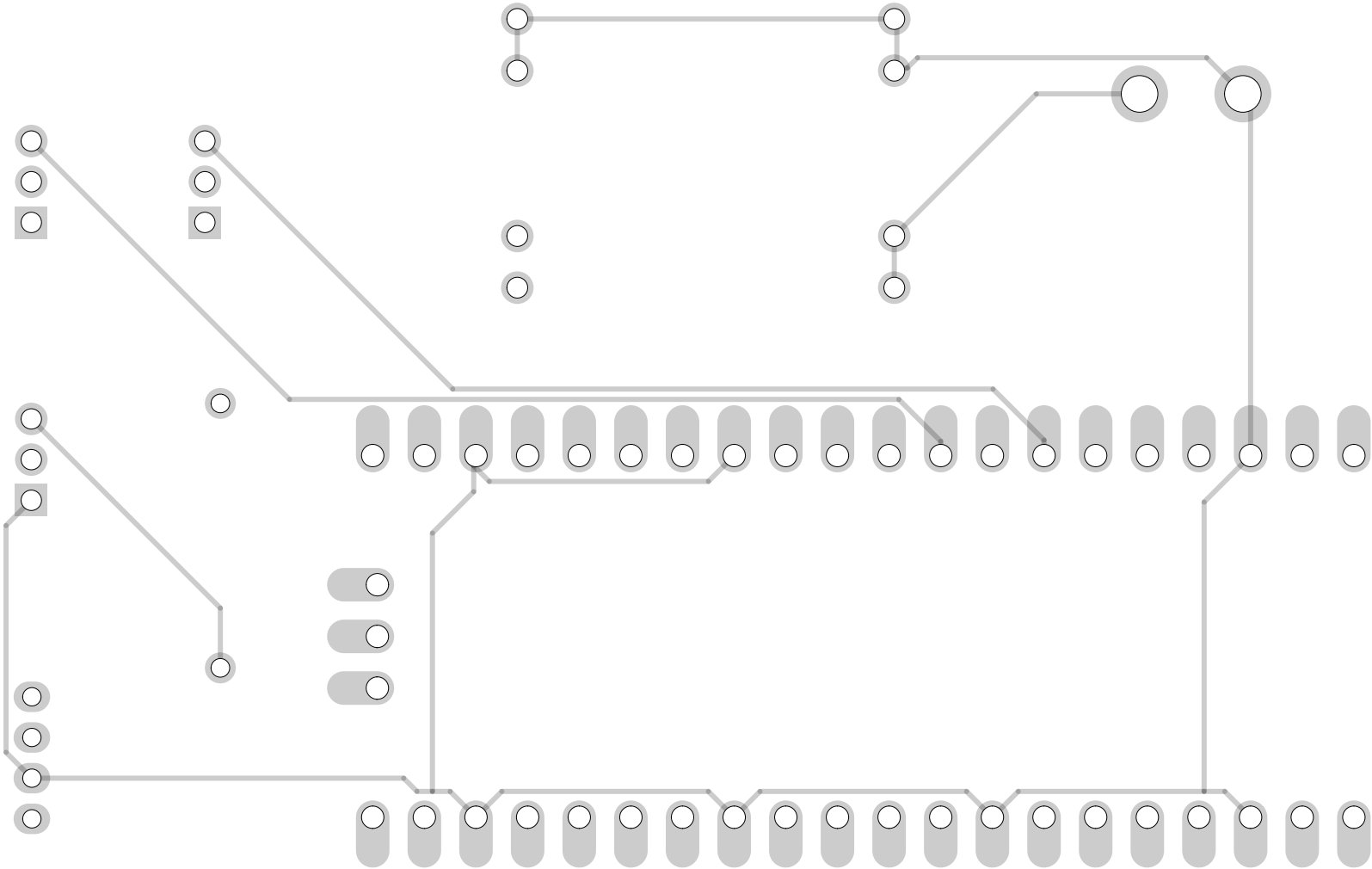
U1-5vbuckconverter
IN-
OUT-
IN+
OUT+
P1
- +24
CN4-ECISO_DFRV2_Analog
CN3-PHISO_DFRV2_Analog
2
CN2-DS18B20
Raspberry Pi Pico
R4
CN1-US_D3(RX)D4(TX)
Nutrino_V1.1