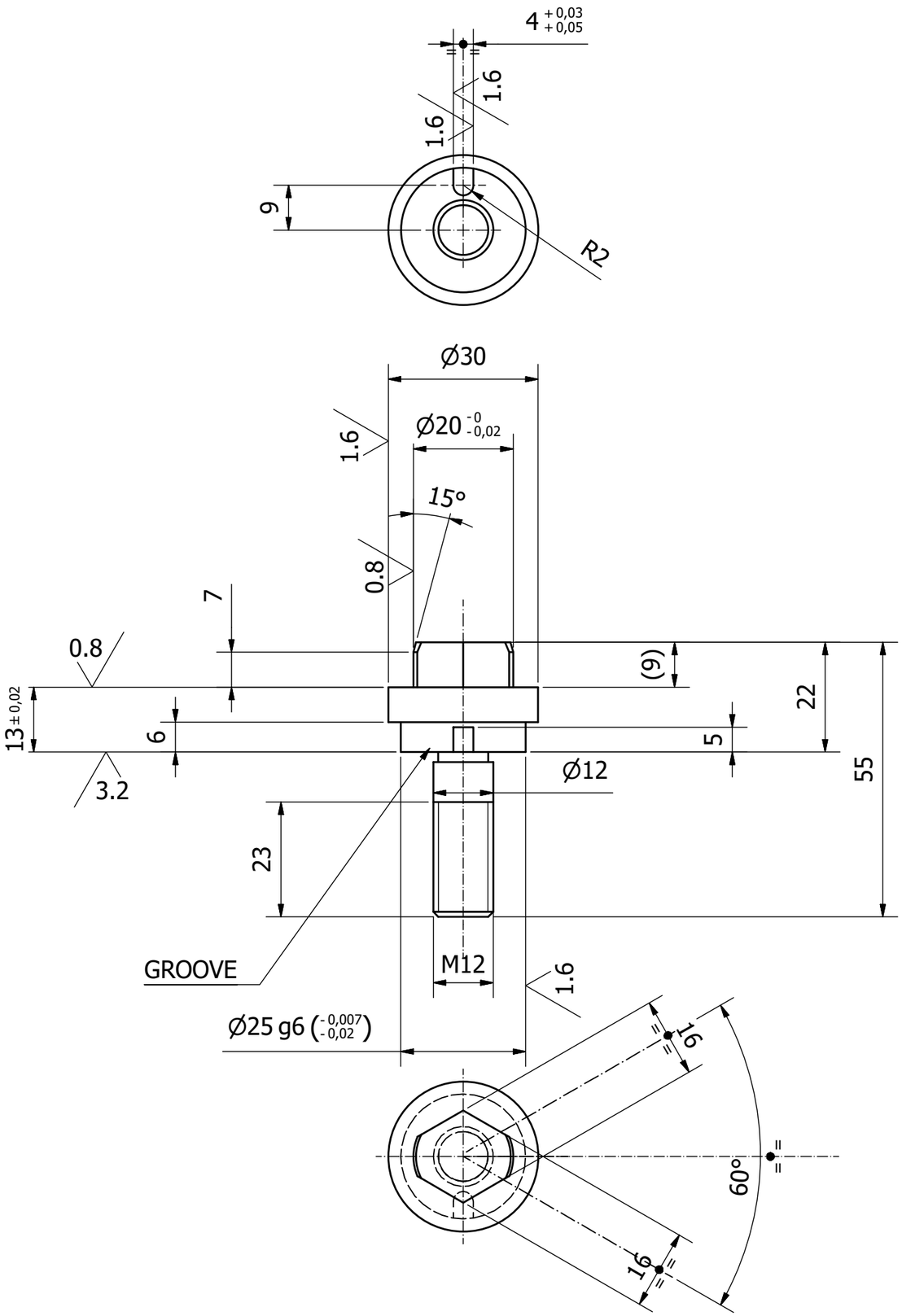

Ref.	Modifications	Date	Sign
e)			
d)			
c)			
b)			
a)			

Linear and angular deviation admitted in accordance with ISO22768-1-m | Shafts h11 | Holes H12 | Checking squared dimensions

All proprietary rights reseved by BONETTO srl. This drawing shall not be reproduced or in any way utilized for components manufaturing without written authorisation

Eu | 3.2 | Chamfer 0.5x45° | Job Ref. 16146-Brm

Material: 18NiCrMo5 | Weight: N/A

Drawn by: E. Audisio | Checked by: | Date: 14/07/2016 | Date:

Thermic Treatment: | HRC: 58-60

Main Line Denomination: CALIPER ASSEMBLY LINE EVO 6

Machine: ROBOT R1

Treatments: CMT - TMP | Spare Code: U

Group: GRIPPER DODGE 18P

Scale: 1:1 | Sheet: 1 / 1 | Rev. | Size: A3

Detail: CENTERING

Drawing n.r: 16146-0R1-103A

Bonetto srl Automazioni
Pinerolo (To) Italy

Ed. AC 08-10-2014