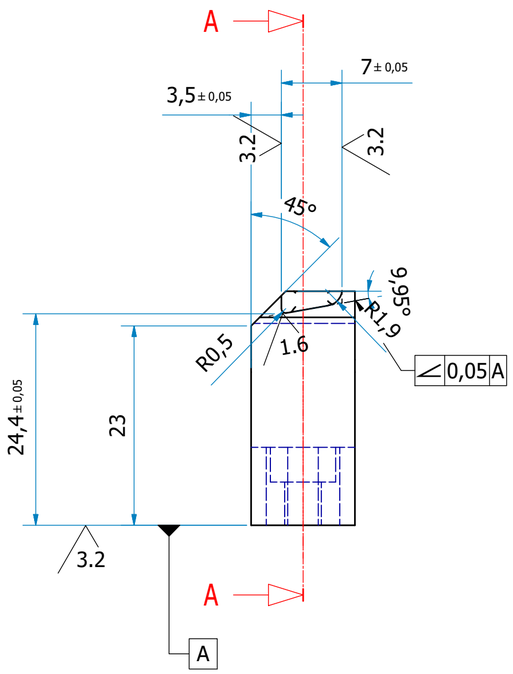

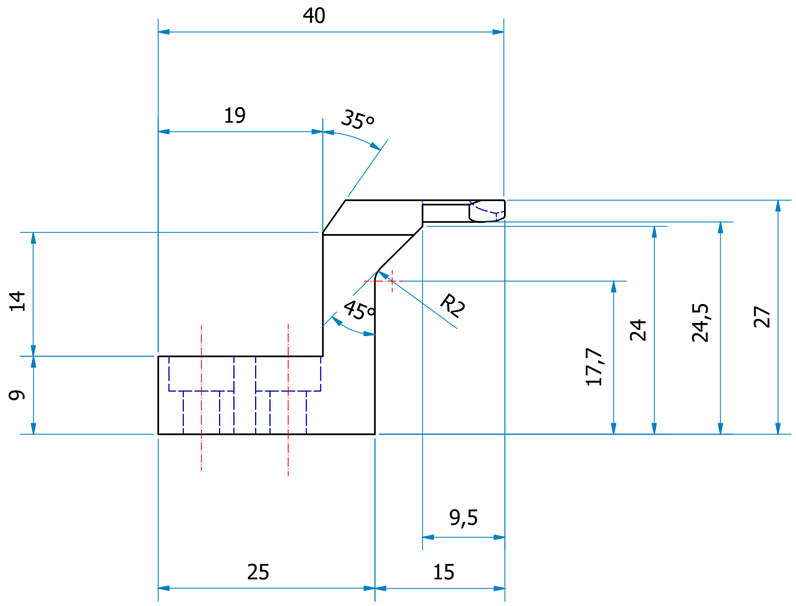

A-A (2 : 1)

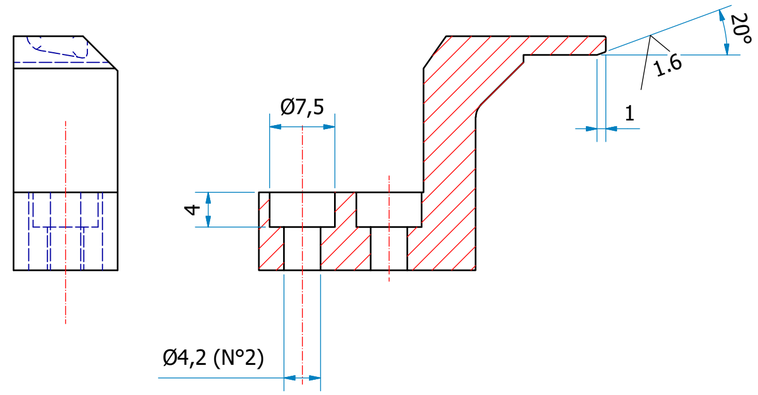

B-B (2 : 1)

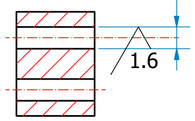

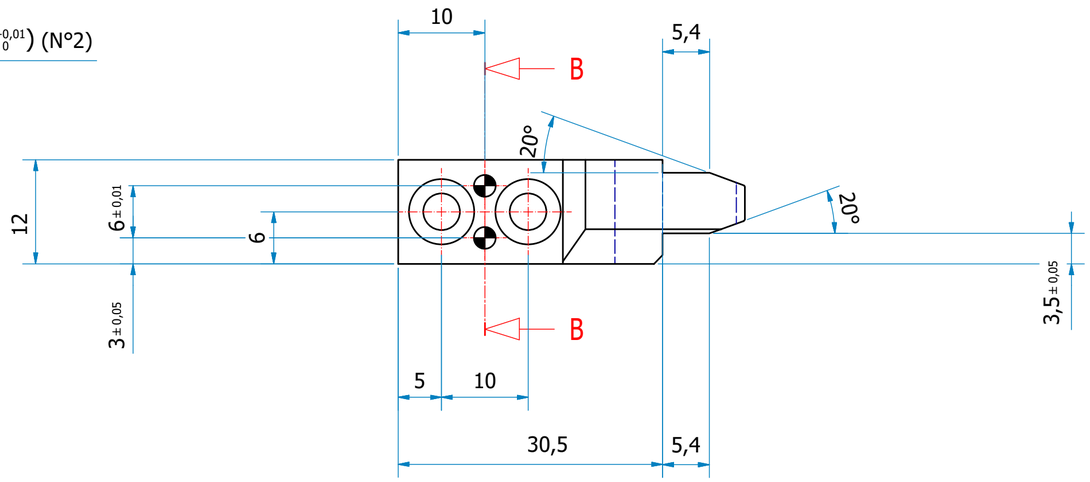

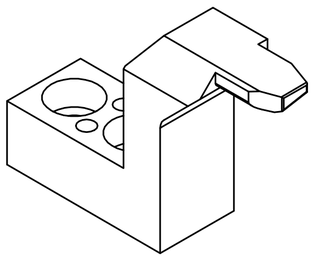

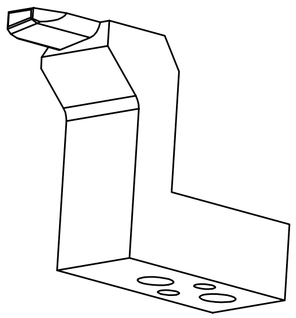

Ref.	Modifications	Date	Sign
e)			
d)			
c)			
b)			
a)			

Linear and angular deviation admitted in accordance with ISO22768-1-m | Shafts h11 | Holes H12 | Checking squared dimensions

All proprietary rights reseved by BONETTO srl. This drawing shall not be reproduced or in any way utilized for components manufaturing without written authorisation

Eu | 6.3 | Chamfer 0.5x45° | Job Ref. 17012 Brm (Mex)

Material: 42CrAlMo7 (Nitr) | Weight: N/A

Drawn by: PSM-CF | Checked by: | Date: 15/05/2017 | Date:

Thermic Treatment: | HRC:

Main Line Denomination: CALIPER ASSEMBLY LINE

Machine: Station 103

Group: Fixture Caliper

Detail: PAD

Treatments: BURNISHED | Spare Code: N

Scale: 2:1 | Sheet: 1 / 1 | Rev.: | Size: A2

Drawing n.r: 17012-103-1114

Bonetto srl Automazioni
Pinerolo (To) Italy

Ed. AC 08-10-2014

A2 | A1 | A0