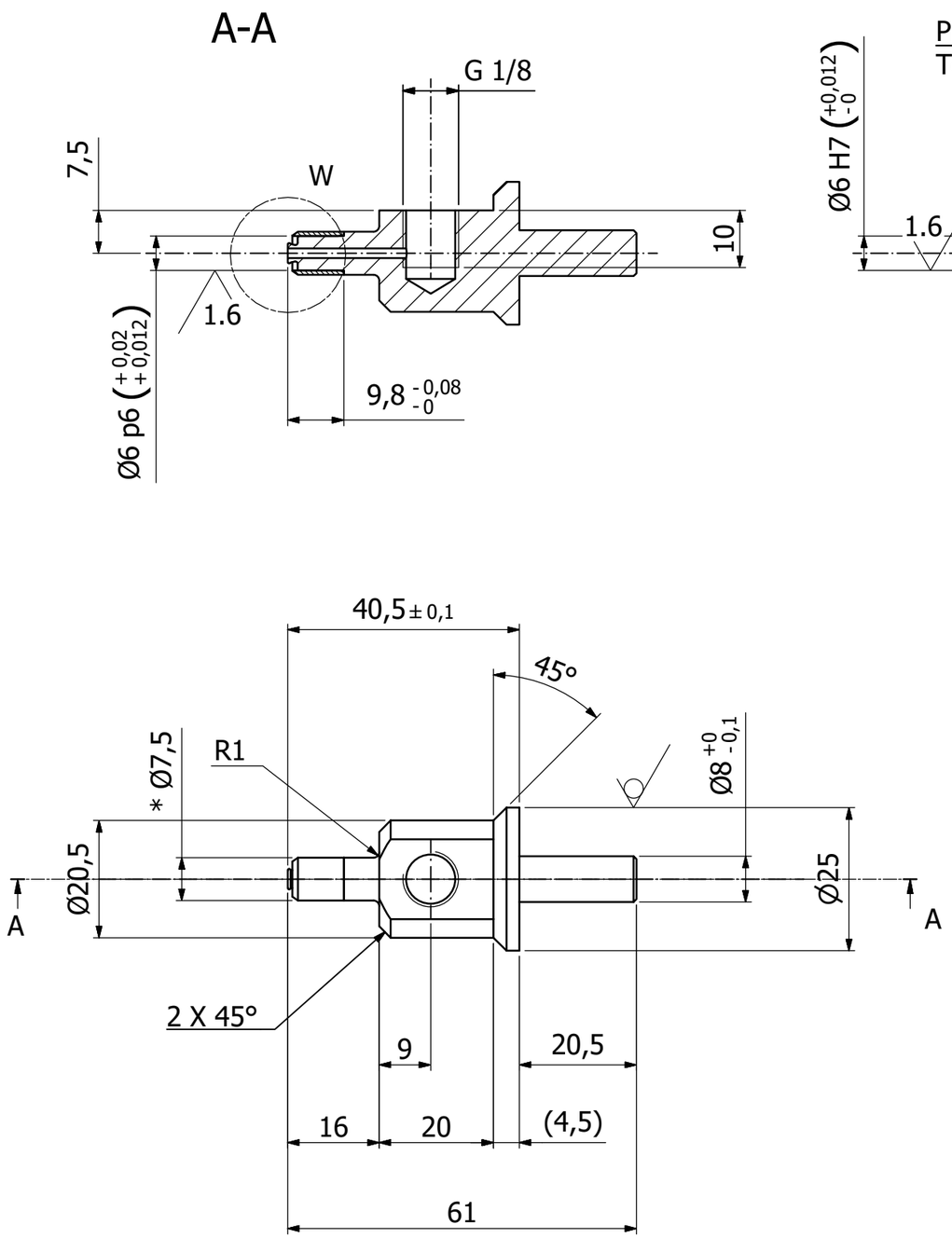

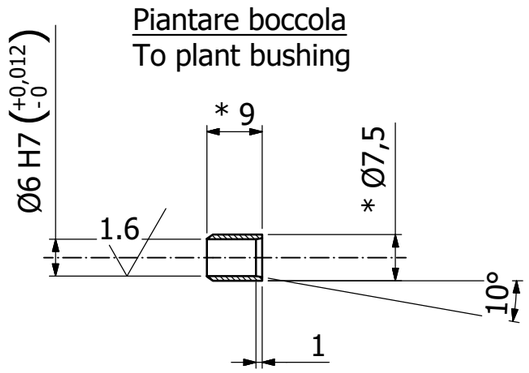

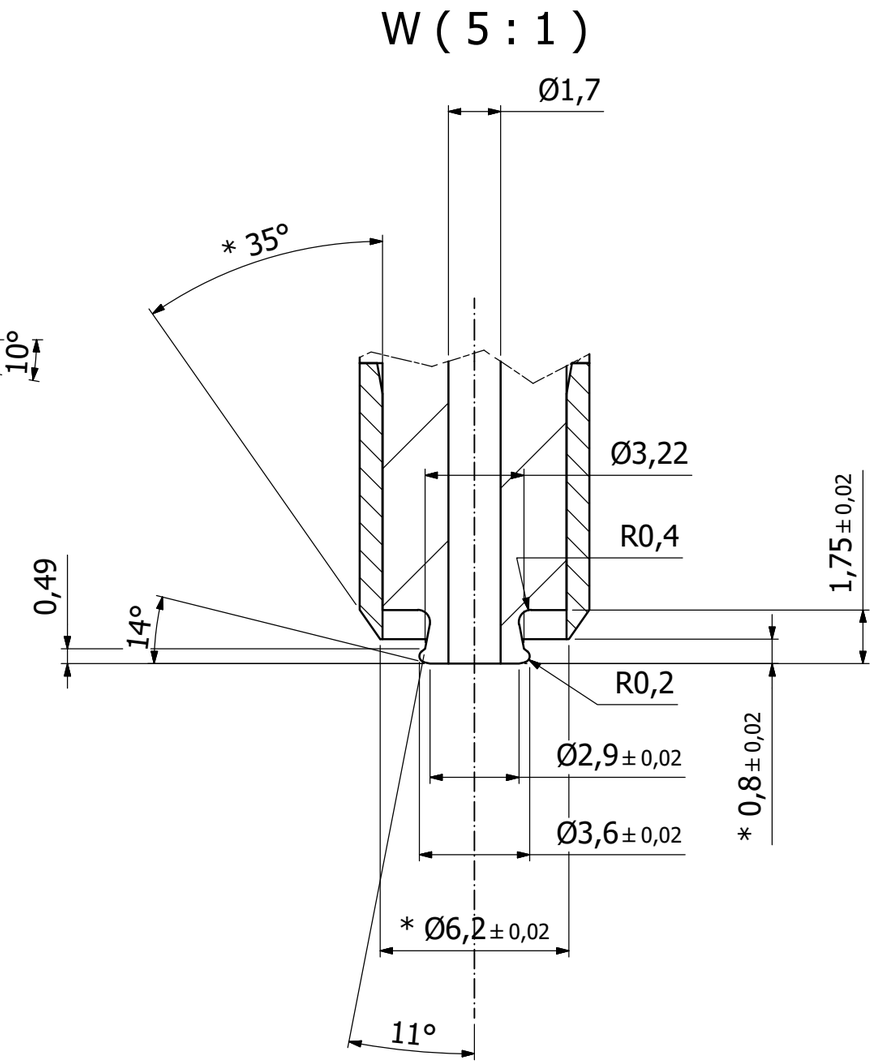

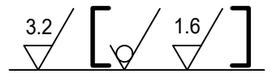

N.B. Quote contrassegnate da *
da ottenere dopo accoppiamento
Dimensions marked with *
to obtain after joining

IT 39NiCrMo3	BONIFICA Hardening & Tempering 调质		FOSFATAZIONE Phosphating 磷化	MODIFICHE/Modifications/修改	
WNr. 1.6511	TRATT. TERMICO/TREATMENT/热处理	HRC / 硬度	PROT. SUP./Surface Prot./表面处理		
中国 40CrNiMoA	PER CINA / For China / 根据形状和位置公差 GB/T1184-1996 10 级			RICAVARE DA / Obtained from / 图 来自:	
US 9840	ATTENERSI ALLE SEGUENTI INDICAZIONI / Comply with following indications / 没有注明的按下列标准执行				
MATERIALE / Material /材料	CH SM. 0.5 x 45°	ANGOLI/Angles/角度 ±0.5°	DIM.LIN./直线尺寸 ISO 2768-1-m	ALBERI/Shaft/轴 h11	FORI/Hole/孔 H12
This drawing is GEFIT property whole or partial use are forbidden without written authorization	DISEGNATORE/Designer/设计者	Verificato/Checked/勾选	DATA/Date/日期	SCALA/Scale/比例尺	
	3D Model Designer UTM310	AVolpi	26/05/2017		
本图纸版权归 GEFIT 所有。未经书面授权 任何公司和个人不得 使用部分或全部图纸。	DWG Designer UTM310				
GEFIT Automation Division	TERMINALE Terminal 端子			M4035.060.04.111	
	DESCRIZIONE/Description/描述			COMM./Job/设备号 . STAZ./Station/工作站号 . GRUPPO/Group/组别 . PARTIC/零件号	
				UGUAGLIANZA/Equality Position/相似件	
				M3798.520.01.006	
				COMM./Job/设备号 . STAZ./Station/工作站号 . GRUPPO/Group/组别 . PARTIC/零件号	
				ORIGINE/Origin/原件	

REV/调整	DATE日期	MODIFICA/Modifications/修改	Designer/设计者	Approved by/审核者
0				

PESO/Weight/重量	FORMATO/Size/纸张尺寸	FOGLIO/Sheet/片
0,07 kg	A3	1 /1