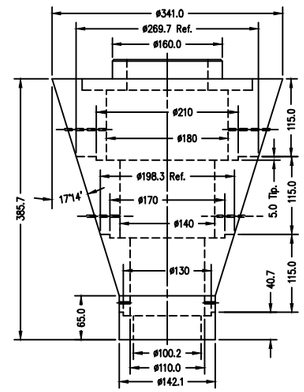

APEX DE ø140
NUEVO

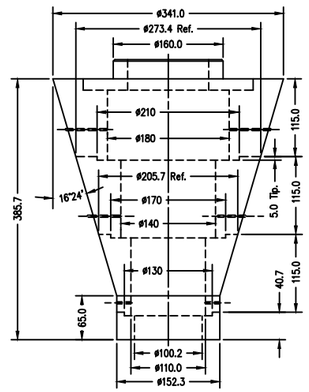

APEX DE ø150
NUEVO

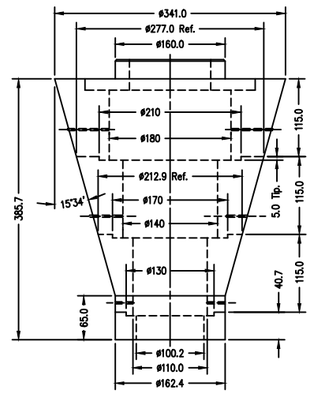

APEX DE ø160
NUEVO

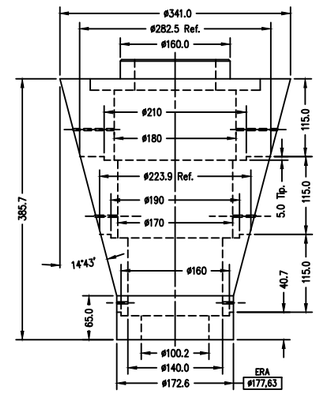

APEX DE ø170
MODIFICAR

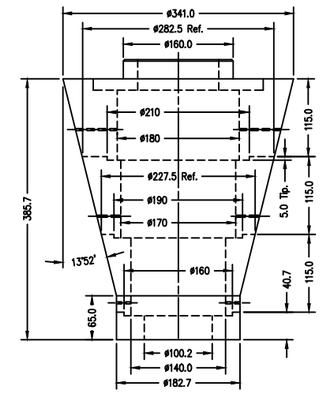

APEX DE ø180
NUEVO

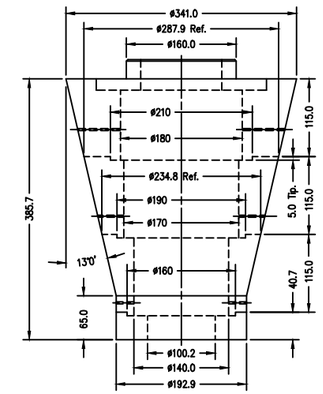

APEX DE ø190
EXISTENTE

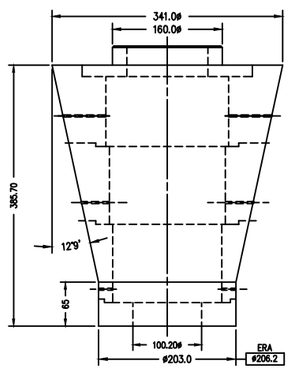

APEX DE ø200
MODIFICAR

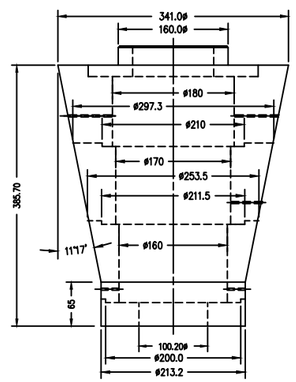

APEX DE ø210
NUEVO

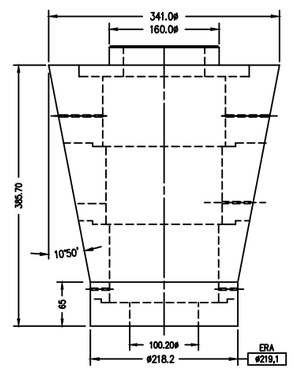

APEX DE ø215
MODIFICAR

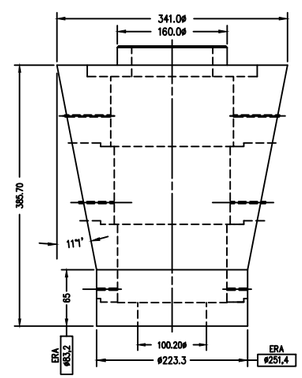

APEX ø220
MODIFICAR

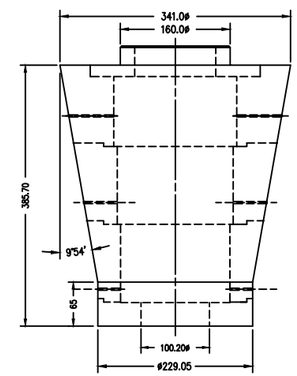

APEX DE ø225
NUEVO

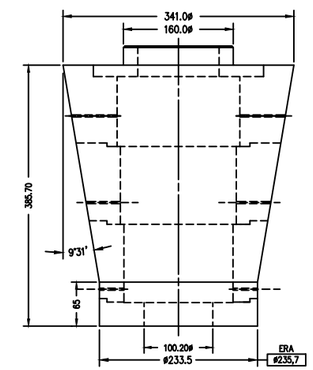

APEX DE ø230
MODIFICAR

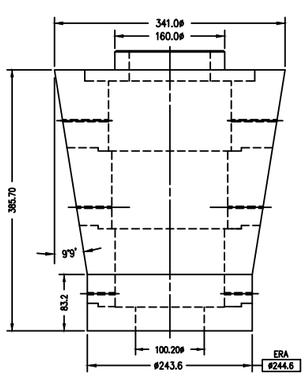

APEX DE ø240
MODIFICAR

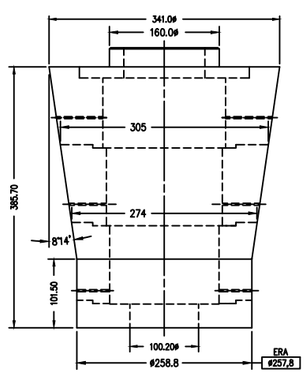

APEX DE ø255
MODIFICAR

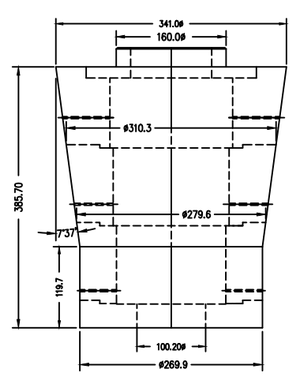

APEX DE ø265
EXISTENTE

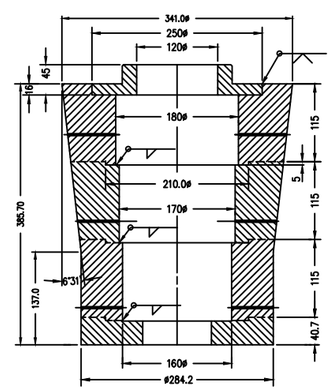

APEX DE ø280
EXISTENTE

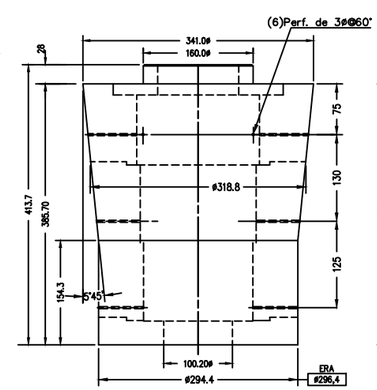

APEX DE ø290
MODIFICAR

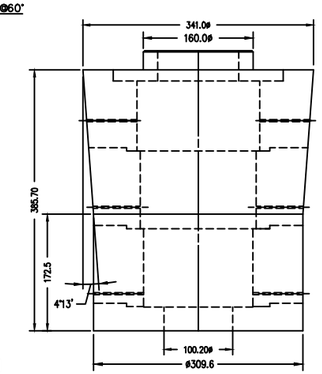

APEX DE ø 305
EXISTENTE

REV	DESCRIPTION	BY	DATE	CHK
4				
3				
2	AGREGA MACHO ø225	RCM	JAN.24,2020	M.F.
1	Extraido del plano D-MG-3997, Modifica y agrega machos faltantes.	JLI	AGO,07,2015	ECG

FOR LIMITS OF UNTOLERANCED DIMENSIONS REFER TO DRG. A4-15895

OFFICE OF ORIGIN : SANTIAGO - CHILE

SCALE: 1 : 4
CHK: ECG
APP: M.K.H.
DRN: J.LAGOS I.
DATE: AGO,07,2015
SHEET 2 OF 2

Copyright © Vulco S.A 2012
Vulco S.A.("the company") is the owner of the copyright and all confidential information in this drawing.

The drawing must not be copied in whole or in part, in any form or by any means, and the information in it must not be disclosed to any person, or used for any purpose other than the specific purpose for which it has been provided, without the prior written consent of the Company

PRODUCT
VULCO®
Wear Resistant Linings

WEIR MINERALS

TITLE :
HICROCICLON CAVEX 800CVX
MOLDE SPIGOT 80064ACVXR55
DETALLE DE MACHOS

DRAWING No A1-MG-3997-1

REV 2

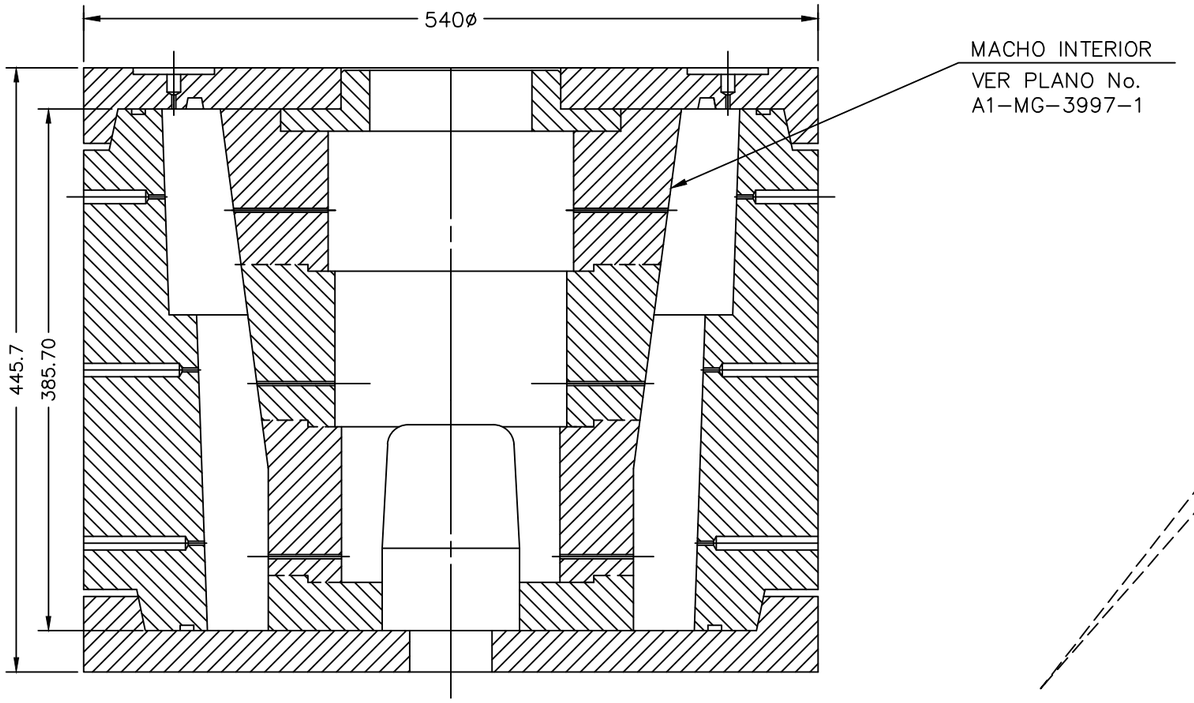

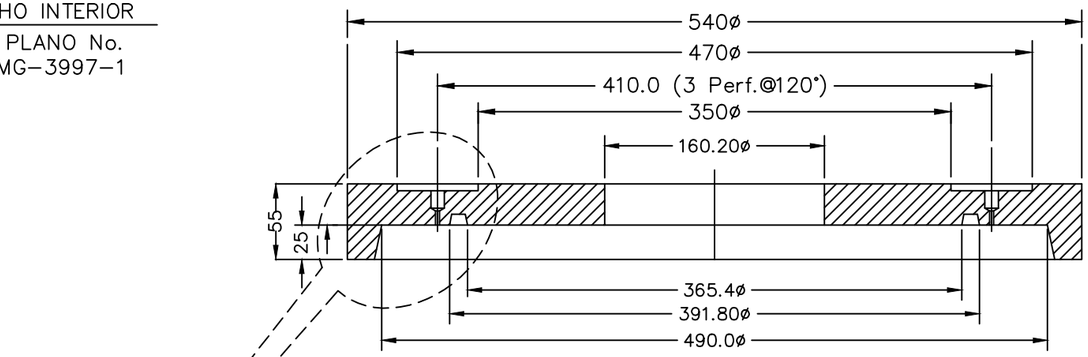

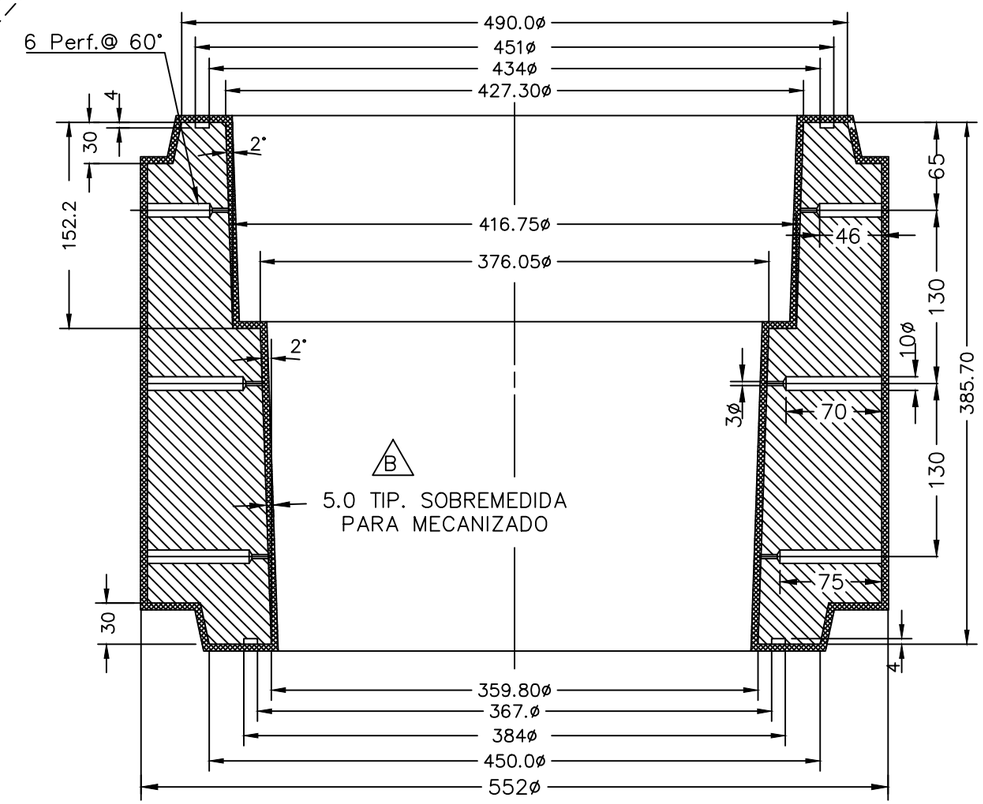

MAT: ACERO FUNDIDO

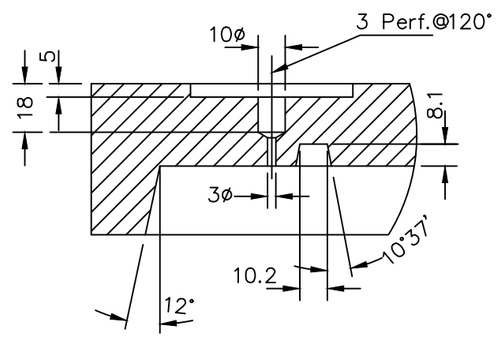

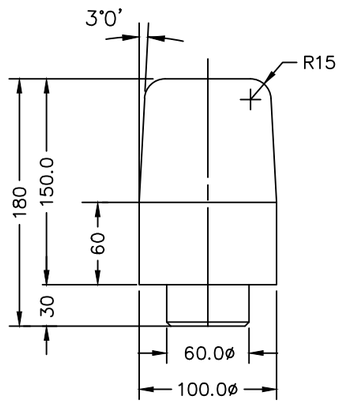

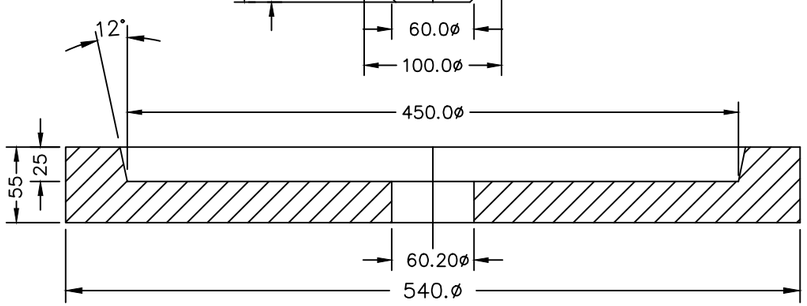

NOTA : Poner marca 10410
con numero de golpe

Cliente	:VULCO S.A.	
Ref. PLANO No.	:CMV3658-18A	A2-112-0-600177
O. F. #	:	
Contraccion	:1.5%	
Goma	:	
Molde #	:10410	

REV	DESCRIPTION	BY	DATE	CHK
E	Modifica machos segun cambio de pulgadas a milimetros,	JLI	06.AGO,2015	ECG
	Agrega machos faltantes			
D	Agrega Macho para 6.7/8" & 7.1/2"	RCM	26.JIL.2013	JLI
C	Agrega Macho para 8.5"	WPV	25.APR.2003	EHC

FOR LIMITS OF UNTOLERANCED DIMENSIONS REFER TO DRG. A4-15095

OFFICE OF ORIGIN :
SANTIAGO - CHILE

Copyright © Vulco S.A 2012
Vulco S.A. ("the company") is the owner of the copyright and all confidential information in this drawing.
The drawing must not be copied in whole or in part, in any form or by any means, and the information in it must not be disclosed to any person, or used for any purpose other than the specific purpose for which it has been provided, without the prior written consent of the Company

SCALE: 1:2
CHK: ECG
APP: M.K.H.
DRN: J.LAGOS I.
DATE: AGO,07,2015
SHEET 1 OF 2

PRODUCT
VULCO®
Wear Resistant Linings

WEIR MINERALS

TITLE :
HICROCICLON CAVEX 800CVX
MOLDE SPIGOT 80064ACVXR55
CONJUNTO - DETALLES

DRAWING No A1-MG-3997

REV E