NAME	DATE	TIME (HRS)

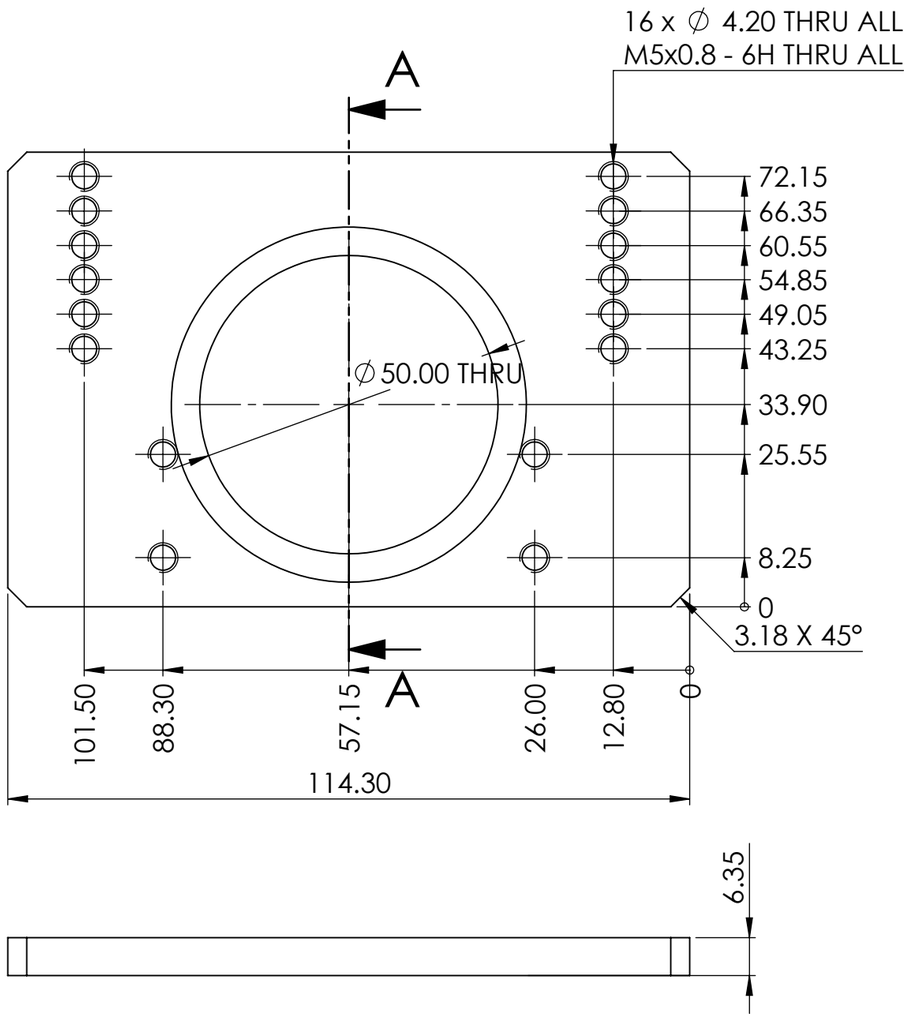

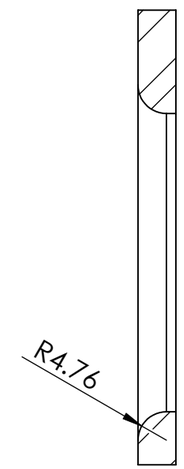

SECTION A-A

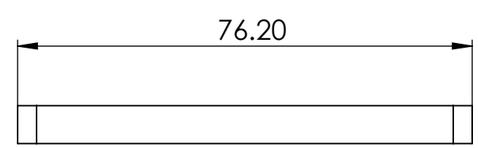

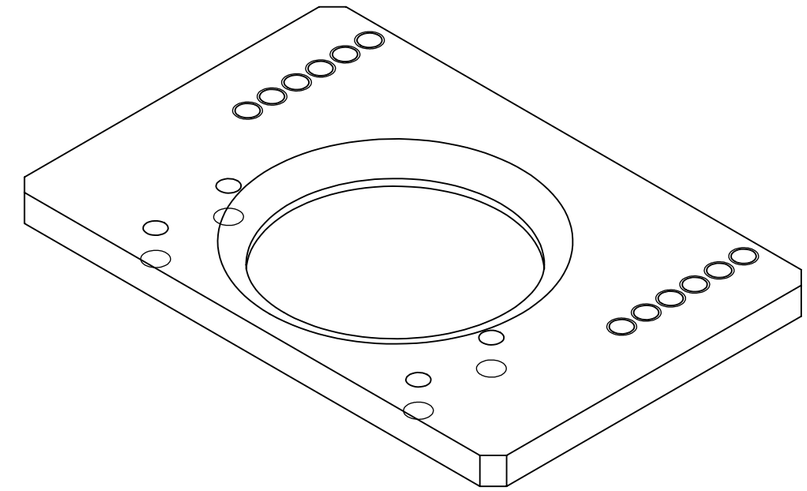

MDM001-TRN-1300-005

PAG. 1 de 1

MEDIDA ESPECIAL

ALL TECHNICAL DATA DISCLOSED HERE IN IS THE PROPERTY OF JOYSON SAFETY SYSTEMS AND SHALL NOT BE USED BY ANY OTHER MANUFACTURER, PROCUREMENT OR DISCLOSURE WITHOUT WRITTEN PERMISSION OF THE OWNMER.

AUTHORIZE	TALLER	QUALITY

NOTES:
Pieza libre de filos y rebabas.

TOTAL OF PIECES	2 Pza.
ANG. PROF	

REV	DESCRIPTION	DATE	APPROVED

REVIEWS

UNLESS OTHERWISE SPECIFIED

TOLERANCES DIMENSIONS	ISO 2768-1 mK-E ASME Y14.5M-1994	
MM	INCHES	ANGLES
+.1 -.1	+.004 -.004	+1° -1°

MATERIAL:	SS304
SURFACE TREATMENT	Pulido
HARDNESS	N.A.

JOYSON SAFETY SYSTEMS

APPROVALS		DATE
DESIGNER	LGG	09-Jul-19
REVIEW	JEC	09-Jul-19

JOYSON TECHNICAL CENTER

MODEL NAME	MDM001-TRN	SERIES No	M2019-067
MACHINE NAME	Dobladora Manual		
PART NUMBER	MDM001-TRN-1300-005		
SIZE B	PART NAME MDM001-TRN-1300-005		REV. A
ESCALE: 1:1		DRAWING IN MILLIMETERS	

TKH-MTC-MF-FM-0016-005