NAME	DATE	TIME (HRS)

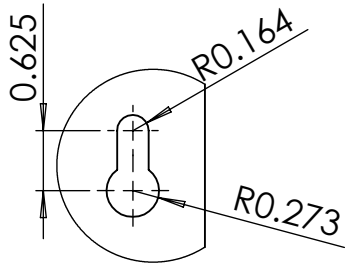

DETAIL A

SCALE 1 : 2

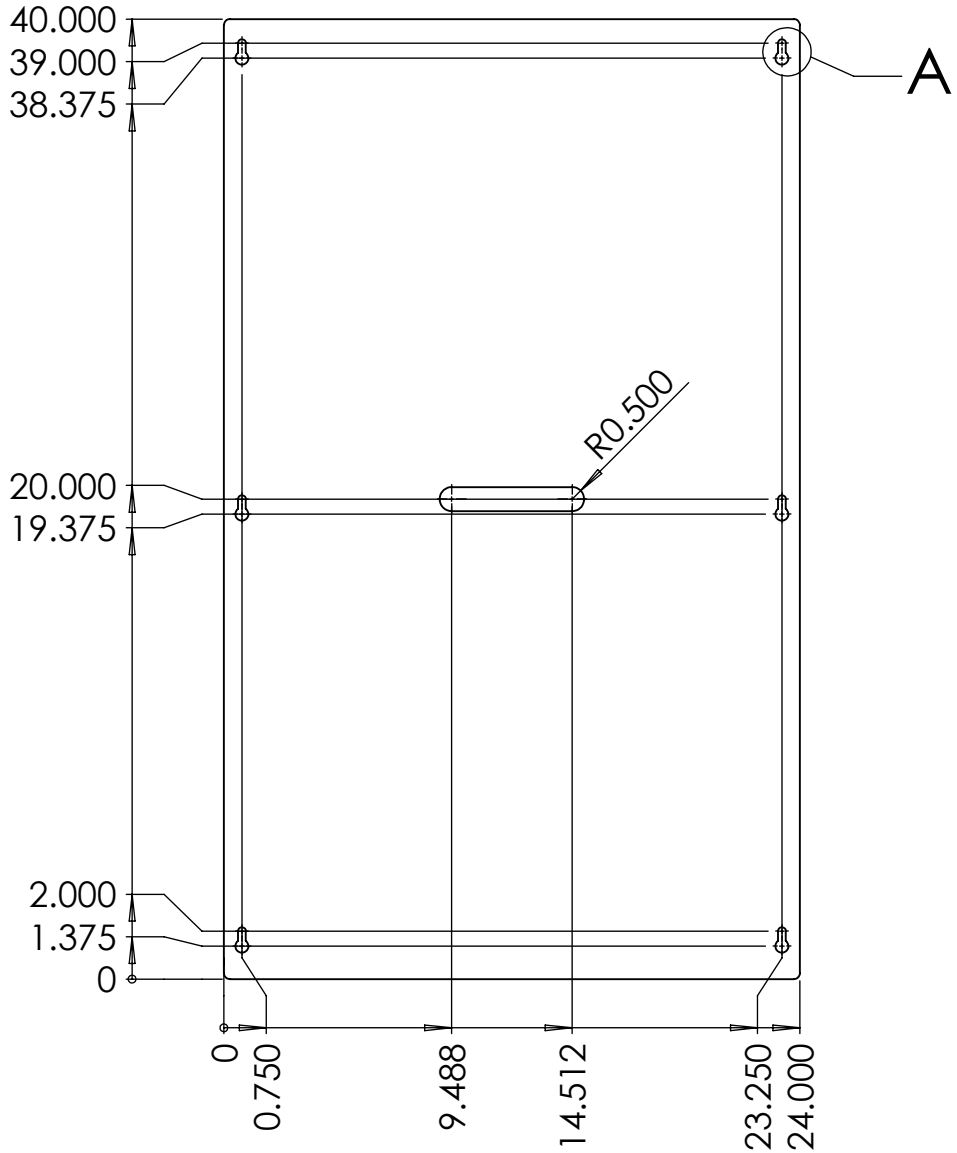

QUALITY

AUTHORIZE

TALLER

NOTES:
Pieza libre de filos y rebabas.

TOTAL OF PIECES	2 Pzas.
ANG. PRO	

REV	DESCRIPTION	DATE	APPROVED

REVIEWS

UNLESS OTHERWISE SPECIFIED

TOLERANCES DIMENSIONS ISO 2768-1 mK-E ASME Y14.5M-1994

MM	INCHES	ANGLES
+.1 -.1	+.004 -.004	+1°-1°

MATERIAL: POLICARBONATO

SURFACE TREATMENT N.A.

HARDNESS N.A.

ASPRW001-P2-102 PAG. 1 de 1

E MEDIDA ESPECIAL

JOYSON SAFETY SYSTEMS

APPROVALS		DATE
DESIGNER	VHGS	28/MAR/2022
REVIEW	JATA	28/MAR/2022

ALL TECHNICAL DATA DISCLOSED HERE IN IS THE PROPERTY OF JOYSON SAFETY SYSTEMS AND SHALL NOT BE USED BY ANY OTHER MANUFACTURER, PROCUREMENT OR DISCLOSURE WITHOUT WRITTEN PERMISSION OF THE OWNMER.

JOYSON TECHNICAL CENTER

MODEL NAME: ASPRW001 SERIES No: M2022-023

MACHINE NAME: V/S ASSEMBLY & SCREW PIPE TO RETRACTOR WORKSTATION

PART NUMBER: ASPRW001-P2-102

SIZE	PART NAME	REV.
A	PART 102	A

ESCALE 1:10 **DRAWING IN** INCHES

JSSAM-JTC-MF-FM-0002-001