General Dimension Tolerance			
0 ~ 4	± 0.1	16 ~ 63	± 0.3
4 ~ 16	± 0.2	63 ~	± 0.5

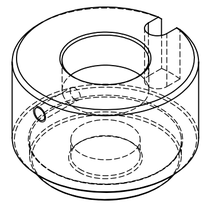

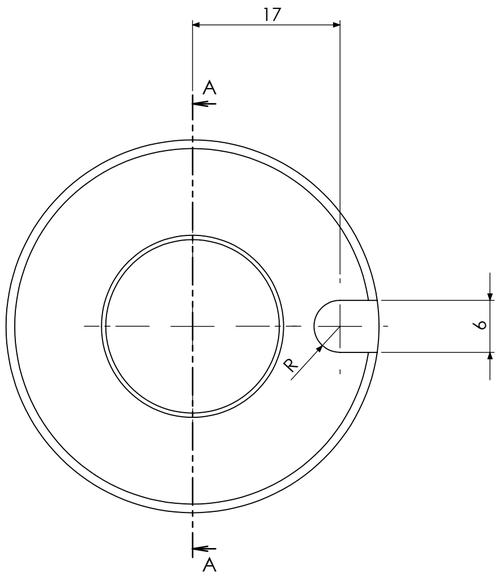

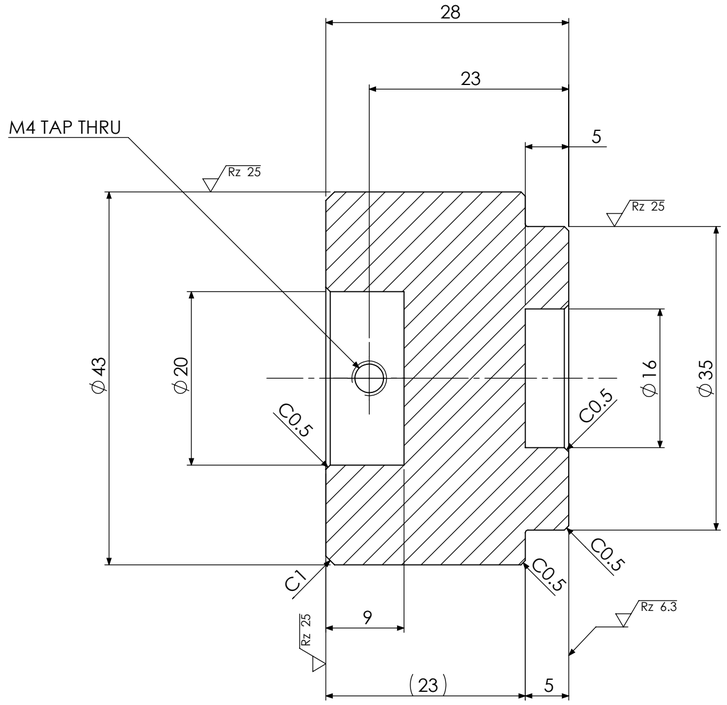

SECTION A-A

Rz 100 (Rz 6.3)

NOTE: DIMENSION PERMISE AFTER PLATING

NOTE: UNLESS OTHERWISE SPECIFIED CHAMFER ALL CORNERS TO C0.5

SURFACE TREATMENT	HEAT TREATMENT	WEIGTH
MICr-20±4μm		
ALL PART		

MATERIAL:	RESEMBLANCE PART No.	IMPO CODE	I/O CODE
HPM1 (P21)			

PART NAME: PUNCH

DENSO MEXICO					DWG NO. M-2321185-102	A2	ASP CODE	SHEET 1 OF 1
APPROVED	CHECKED	CHECKED	DESIGNED	DRAWN G.B.	QTY.:1	No.: 7		SCALE:2:1

CONFIDENTIAL