General Dimension Tolerance			
0 ~ 4	± 0.1	16 ~ 63	± 0.3
4 ~ 16	± 0.2	63 ~	± 0.5

REVISIONS			
REV.	DESCRIPTION	DATE	APPROVED
1	ADD HOLE, TAP M4	11/27/2020	DS
2	ADD Ø4 DRILL THRU	12/3/2020	DS

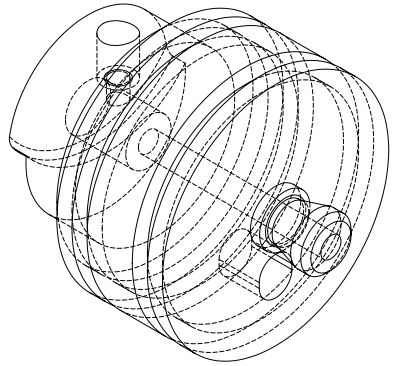

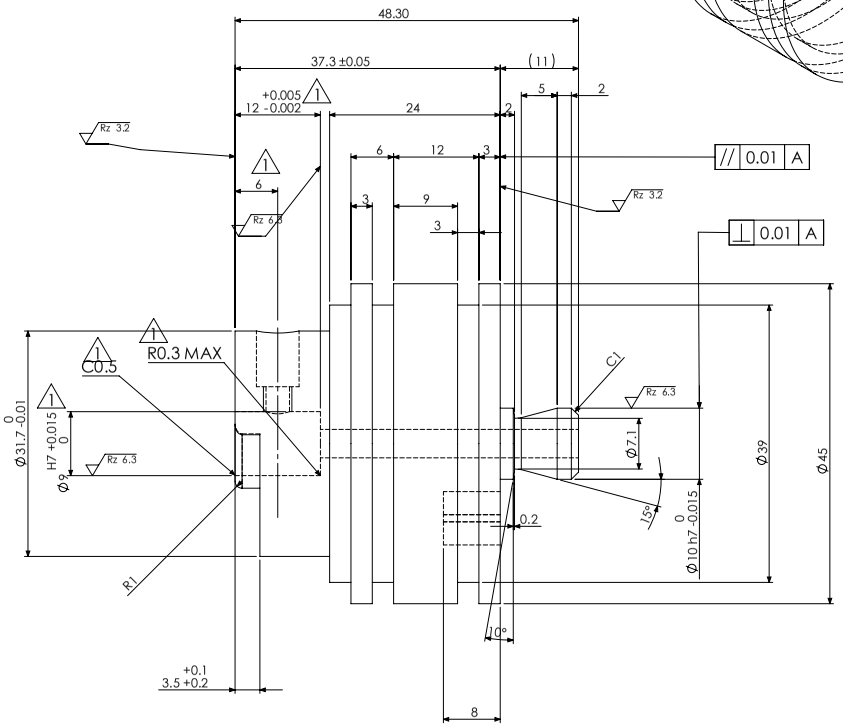

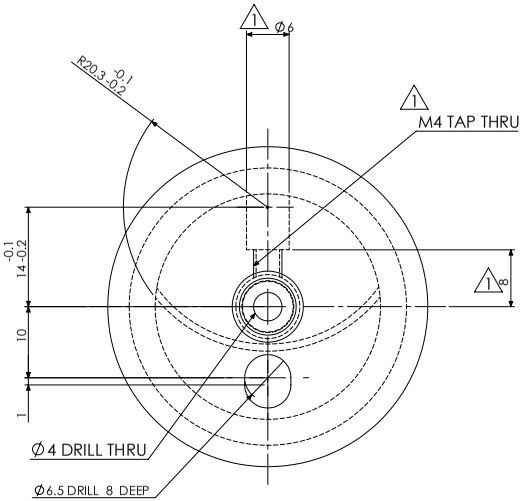

NOTE: ALL EDGES MUST BE C0.5 UNLESS OTHERWISE SPECIFIED

Rz 100 (Rz 6.3 Rz 3.2)

SURFACE TREATMENT	HEAT TREATMENT	WEIGHT
MICr-20 ± 4μm	HRC60-62	
ALL PART	QT	
MATERIAL:	RESEMBLANCE PART No.:	INFO CODE / I/O CODE
SKS3 (AISI 01)		
PART NAME: PUNCH		
DENSO MEXICO	DWG NO. M-1059916-050	A2 / A3P CODE / SHEET 1 OF 1
APPROVED / CHECKED / CHECKED / DISSIGNED / DRAWN	QTY.: 1	No.: 5 / SCALE:2:1

CONFIDENTIAL