符号 SYM	変更事項 REVISION RECORD	発行NO ISSUE NO.	年月日 DATE	変更者 DR
1	金型ベースと干渉する為全長カット		2015.10.13	[illegible]

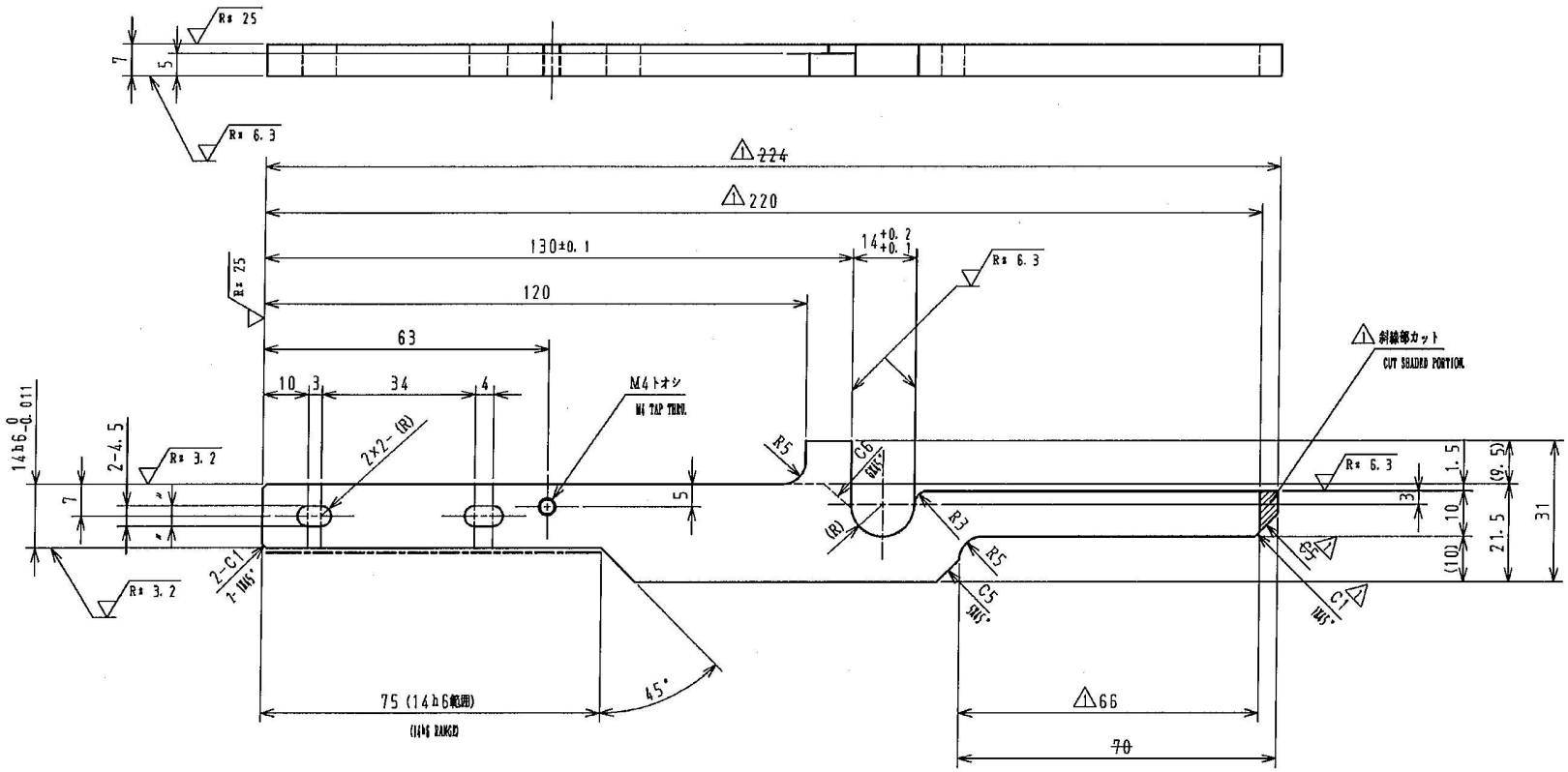

UNLESS OTHERWISE SPECIFIED, CHAMFER ALL CORNERS TO 0.3mm.

THIS DRAWING AND ITS RELATED TECHNICAL INFORMATION ARE THE PROPERTY OF DENSO CORPORATION AND/OR THE DENSO GROUP COMPANIES. THEY SHALL NOT BE COPIED, USED NOR TRANSFERRED, IN WHOLE OR IN PART, TO ANY THIRD PARTY WITHOUT PRIOR PERMISSION OF DENSO CORPORATION.

C0.3

熱処理 HEAT TREATMENT: VH HRC61~63	名称: 旋回ガイドレール	員数 QUANTITY: 1 ヵ
表面処理 SURFACE TREATMENT	NAME: TURN GUIDE RAIL	尺度 SCALE: 1:1
材質 MATERIAL: SKD11 ASTM A681 D2	品番 PART NO.: 040-011A / 関連品番 RELATED PARTS NO.	枚数 SHEET
THIRD ANGLE PROJECTION / UNIT OF MEASURE MILLIMETER (INCH)	設備名: ANC BF23ウインドー 切断 01次 音叉分断箱詰機	
承認 APPROVED: 高御 充男 2015/06/17 / 検討 CHECKED: / 検図 CHECKED: / 設計 DESIGNED: 綾部 一友 2015/06/13 / 製図 DRAWN	EQUIPMENT NAME: ANC BF23 POWER WINDOW REGULATOR MOTOR CUTTING #01 TUNING FORK TERMINAL CUTTING & PACKAGING MACHINE	
	図番 DRAWING NO.: M-PR-S1-096-040	

GENERAL DIMENTIONAL TOLERANCE(JIS B 0405 / ISO 2768-1)

LENGTH (GENERAL DIMENTIONAL TOLERANCE)		
OVER 0.5 UP TO 3	±0.1	±0.5
OVER 3 UP TO 6	±0.1	±0.6
OVER 6 UP TO 30	±0.2	±1.2
OVER 30 UP TO 120	±0.3	±2.0
OVER 120 UP TO 400		
OVER 400 UP TO 1000		
OVER 1000 UP TO 2000		
OVER 2000 UP TO 4000		

GENERAL DIMENTIONAL TOLERANCE(JIS B 0405 / ISO 2768-1)

LENGTH DIMENSIONAL TOLERANCE IN CHAMFERED PARTS		
OVER 0.5 UP TO 3	±0.2	10 OR LESS
OVER 3 UP TO 6	±0.5	OVER 10 UP TO 50
OVER 6	±1.0	OVER 50 UP TO 120

TOLERANCE OF ANGLE DIMENSION SHORTER SIDE OF CORNER		
±1°	OVER 120 UP TO 400	±10'
±30'	OVER 400	±5'
±20'		

021/08/03 [illegible] 正彦
DIS40K3HKU0AC

DENSO

品質と安全のデンソー
Quality & Safety First

出図担当 ANC 萩原

CONFIDENTIAL