ITEM No.	ITEM QTY.	NAME	MAT'L QTY.	MAT'L PART No.
1	1	PEDESTAL	1 ea	SEE CHART
2	6	.62"-11 UNC THREADED ROD	1.12 ft	ZTR625MS
3	6	.62"-11 UNC THREADED ROD	1.25 ft	ZTR625MS
4	1	.75" HR PL	49 lb	WPL75
5	1	LOCTITE	1	23271

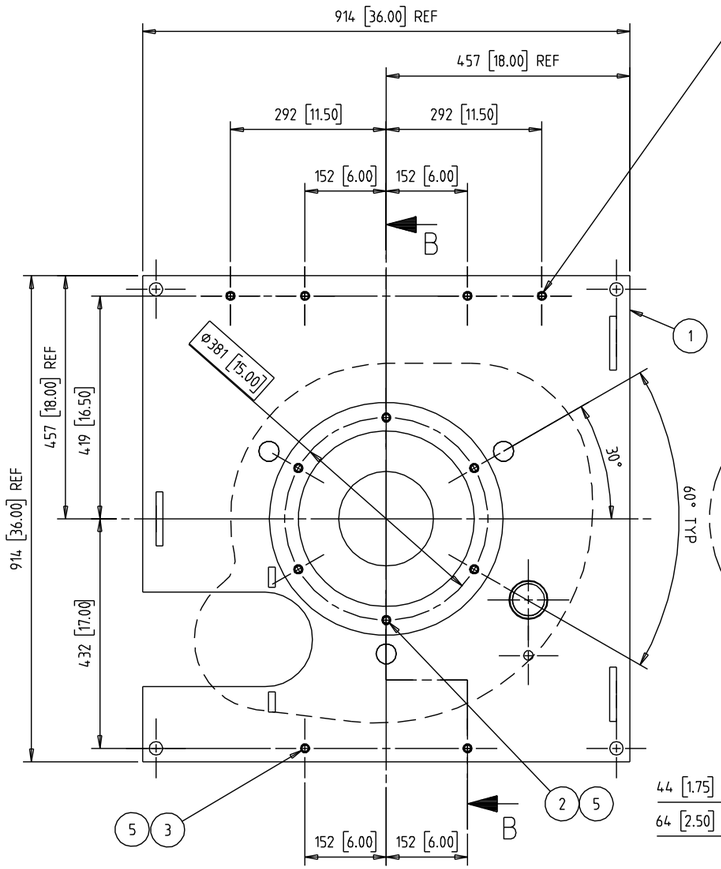

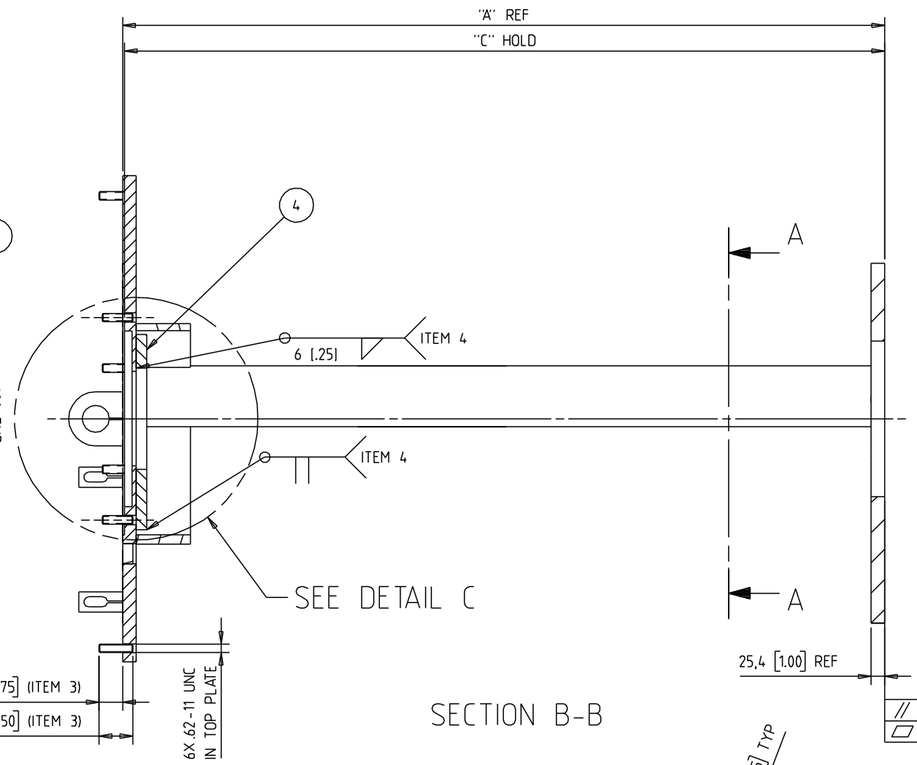

SECTION B-B

//	0,794 [.031] B
▱	0,794 [.031]

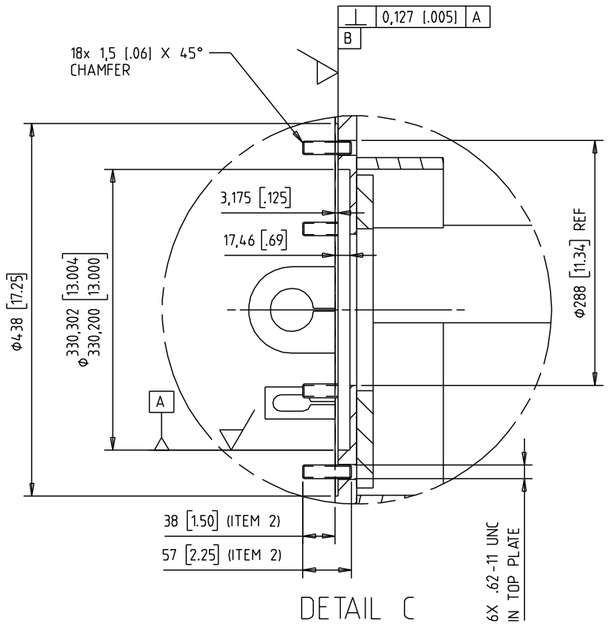

DETAIL C

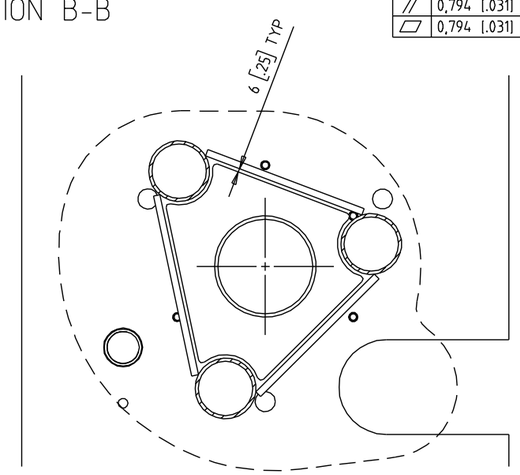

SECTION A-A

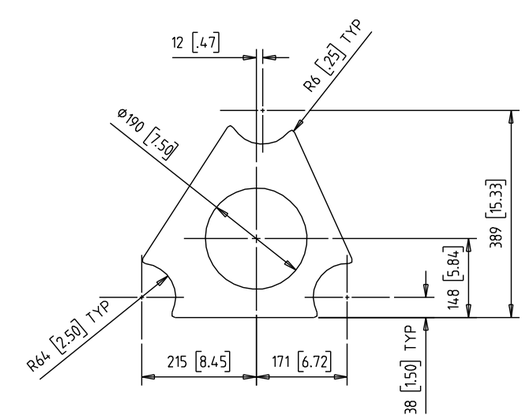

DETAIL ITEM 4

NOTES:
1.) STEEL TO BE ASTM-A-36 OR EQUAL.
2.) WELDING MUST CONFORM TO CYCLICALLY (DYNAMICALLY) LOADED STRUCTURES OF THE A.W.S.-D-1.1 CODE EXCEPT THAT UNDERCUT IS NOT PERMITTED.
3.) ALL WELDS TO BE 8 [.32] CONTINUOUS FILLET UNLESS OTHERWISE SPECIFIED.
4.) ONLY QUALIFIED OR PREQUALIFIED WELDING PROCEDURE SPECIFICATIONS (WPS) MAY BE USED IN WELDING.
5.) WELDERS MUST BE CERTIFIED FOR THE PROCESS AND POSITION BEING USED.
6.) ALL WELDMENTS ARE SUBJECT TO VISUAL INSPECTION BY A C.W.I.
7.) REMOVE ALL BURRS AND SHARP EDGES.
8.) SURFACE PREPARATION AND PAINTING PROCEDURE SHOULD BE IN ACCORDANCE WITH APPLICABLE SECTIONS OF THE STRUCTURAL STEEL PAINT COUNCIL SPECIFICATIONS.
9.) STAMP PART NUMBER USING 8 [.31] HIGH NUMERALS.
10.) DIMENSIONS SHOWN THUS [ ] ARE IN INCHES.
11.) REWORK STOCK PEDESTAL AS FOLLOWS:
A) REMOVE 3X ADJUSTING STUDS.
B) REMOVE SHAFT GUARD.
C) MACHINE STEP.
D) DRILL AND TAP TOP PLATE 9 PLACES.
E) INSERT STUDS PER PRINT USING LOCTITE.
F) WELD PLATE ITEM #4.

*	DWG. No.	ITEM #1 PART No.	PUMP LENGTH	DIMENSION "A"	DIMENSION "C"	FINISHED PART No.
L	47-3446L	21362	24"	467 [18.38]	463,550 [18.250]	ZPD47-3446L
E	47-3446E	21369	36"	772 [30.38]	768,350 [30.250]	ZPD47-3446E
A	47-3446A	21376	48"	1076 [42.38]	1073,150 [42.250]	ZPD47-3446A
B	47-3446B	24671	60"	1381 [54.38]	1377,950 [54.250]	ZPD47-3446B
C	47-3446C	21387	72"	1686 [66.38]	1682,750 [66.250]	ZPD47-3446C

FOR LIMITS OF UNTOLERANCED DIMENSIONS REFER TO DRG. A388878.

Copyright © Weir Slurry Group Inc. 2010

Weir Slurry Group Inc. ("the Company") is the owner of the copyright and all confidential information in this drawing. The drawing must not be copied in whole or in part, in any form or by any means, and the information in it must not be disclosed to any person, or used for any purpose other than the specific purpose for which it has been provided, without the prior written consent of the Company.

No.	DESCRIPTION	BY	DATE	CHK
5				
4				
3				
2				
1	REWORKED FOR REDESIGNED MOTOR SUPPORT BRACKET DR109800MAD	MLV	FEB.25,2010	KDS

REVISIONS

APP.	RJK
CHECK	EAK
DRN.	KDS
DATE	DEC.2,2009
SCALE	

PRODUCT : WARMAN PUMP

TITLE : 4" VERTICAL PUMP (5000 SERIES) REWORKED PEDESTAL DETAIL

WEIR MINERALS NORTH AMERICA
DESIGN CENTRE OF ORIGIN : MADISON

DRAWING No. 47-3446*

REV. 1