General Dimension Tolerance			
0 ~ 4	± 0.1	16 ~ 63	± 0.3
4 ~ 16	± 0.2	63 ~	± 0.5

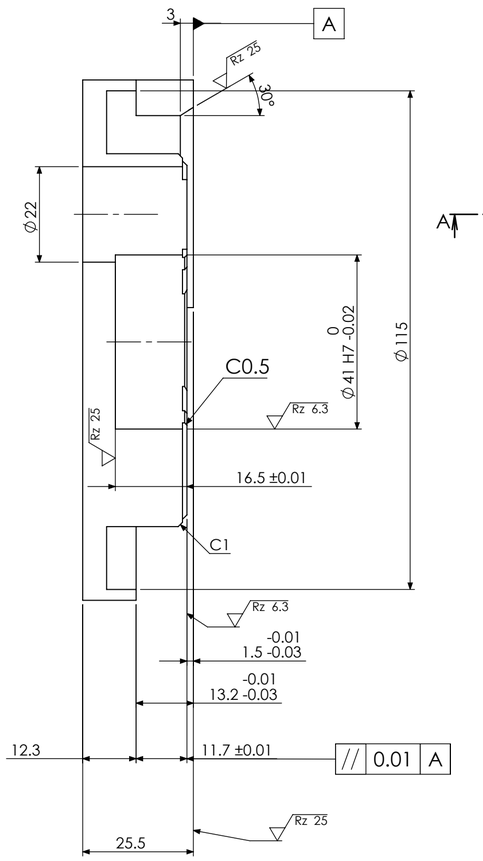

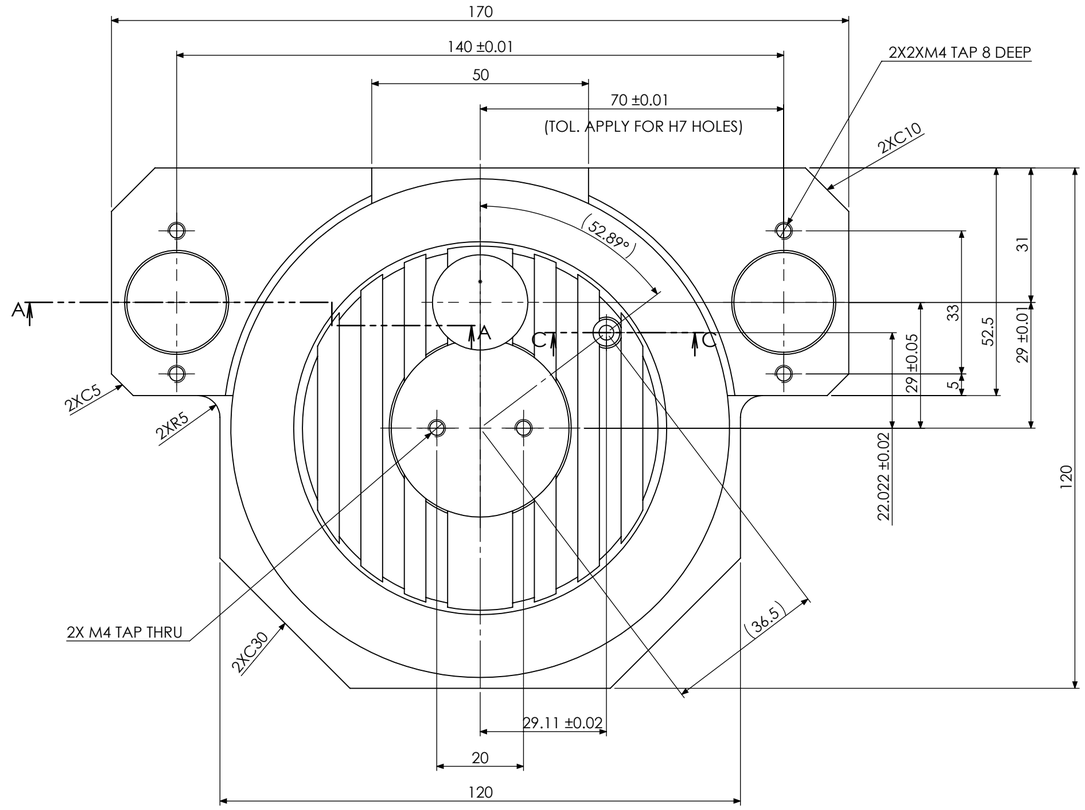

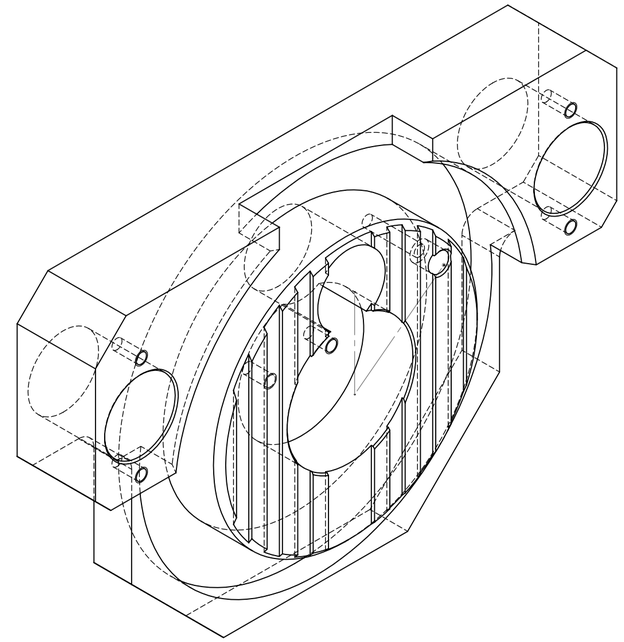

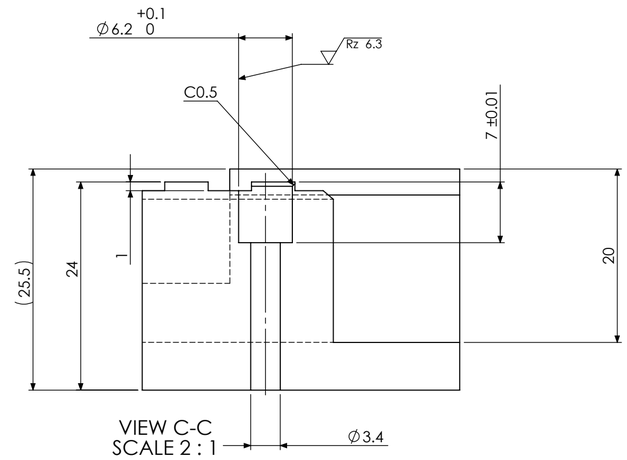

VIEW C-C
SCALE 2 : 1

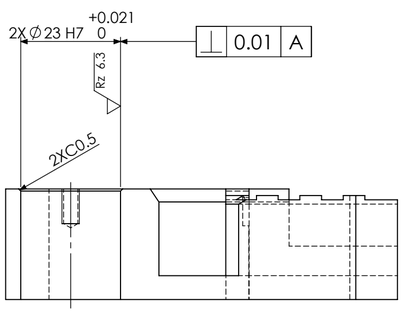

VIEW A-A

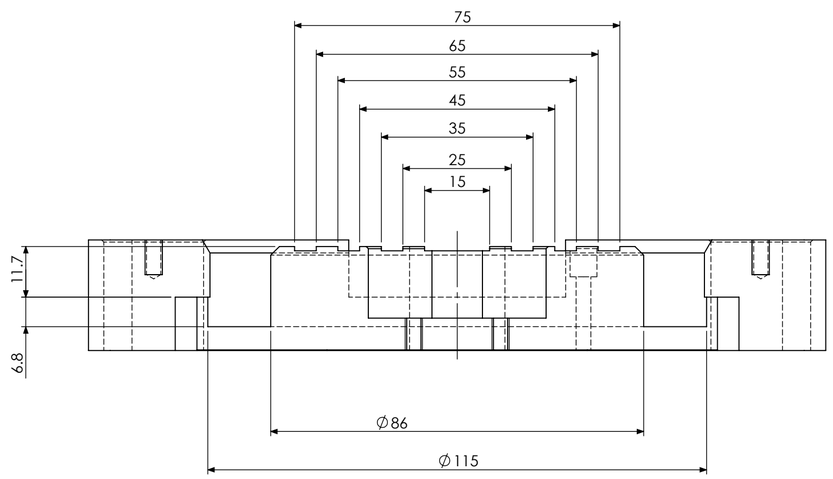

NOTE: DIMENSION PREMISE AFTER PLATING.
NOTE: ALL EDGES MUST BE C0.3 UNLESS OTHERWISE SPECIFIED

Rz 100 (Rz 6.3 Rz 25)

SURFACE TREATMENT	HEAT TREATMENT	WEIGHT
MICr-20 +/- 4 µm ALL PART		1
MATERIAL:	RESEMBLANCE PART No.	IMPO CODE / I/O CODE
(AISI P21) HPM 1		
PART NAME: GUIDE		

DENSO MEXICO					DWG NO. M-2321159-060	A2	ASP CODE	SHEET 1 OF 1
APPROVED	CHECKED	CHECKED	DESIGNED	DRAWN RT	QTY.: 1	No.: 6		SCALE:1:1

Rz 100

CONFIDENTIAL