NAME	DATE	TIME (HRS)

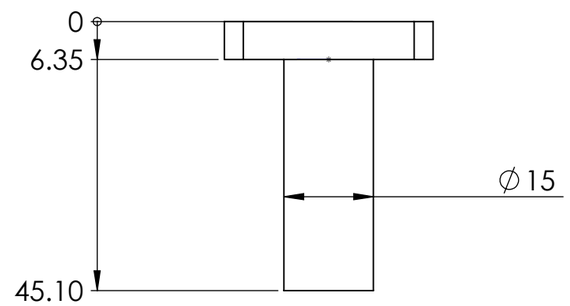

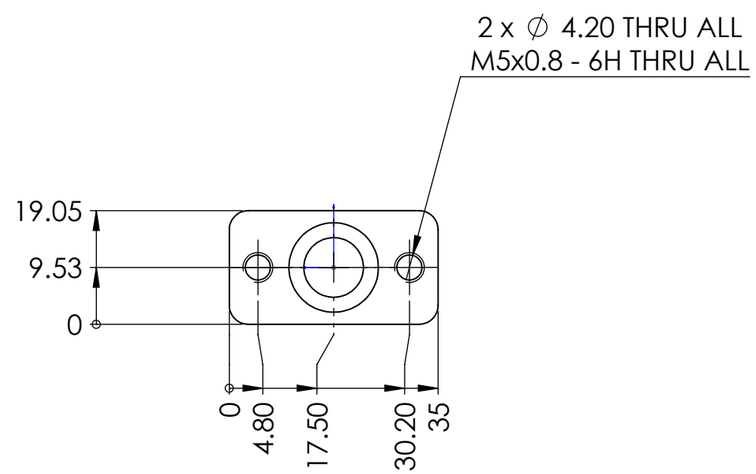

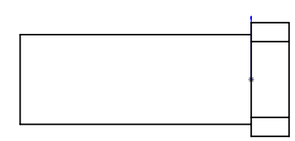

CPSA001-TRN-200-013

PAG. 1 de 1

MEDIDA ESPECIAL

ALL TECHNICAL DATA DISCLOSED HERE IS PROPERTY OF **TAKATA** SEAT BELTS INC. AND SHALL NOT BE USED BY ANY OTHER MANUFACTURER, PROCUREMENT OR DISCLOSURE WITHOUT WRITTEN PERMISSION OF THE OWNER

AUTHORIZE	TALLER	QUALITY

NOTES:

Pieza libre de filos y rebabas.

REV	DESCRIPTION	DATE	APPROVED

REVIEWS

TOTAL OF PIECES: 5

ANG. PROF

UNLESS OTHERWISE SPECIFIED

TOLERANCES DIMENSIONS: ISO 2768-1 mK-E ASME Y14.5M-1994

MM	INCHES	ANGLES
+.1 -.1	+.004 -.004	+1° -1°

MATERIAL: D2

SURFACE TREATMENT: NITRURADO QPQ

HARDNESS

TAKATA

APPROVALS		DATE
DESIGNER	GRMV	15/04/2019
REVIEW	JEC	15/04/2019

TAKATA MONTERREY TECHNICAL CENTER

MODEL NAME	CPSA001-TRN	SERIES No	M2019-072R
MACHINE NAME	Op 80 C Pillar / Screw Assy		
PART NUMBER	CPSA001-TRN-200-013		
SIZE **B**	PART NAME		REV. **A**
ESCALE: 1:1		DRAWING IN MILLIMETERS	

TKH-MTC-MF-FM-0016-004