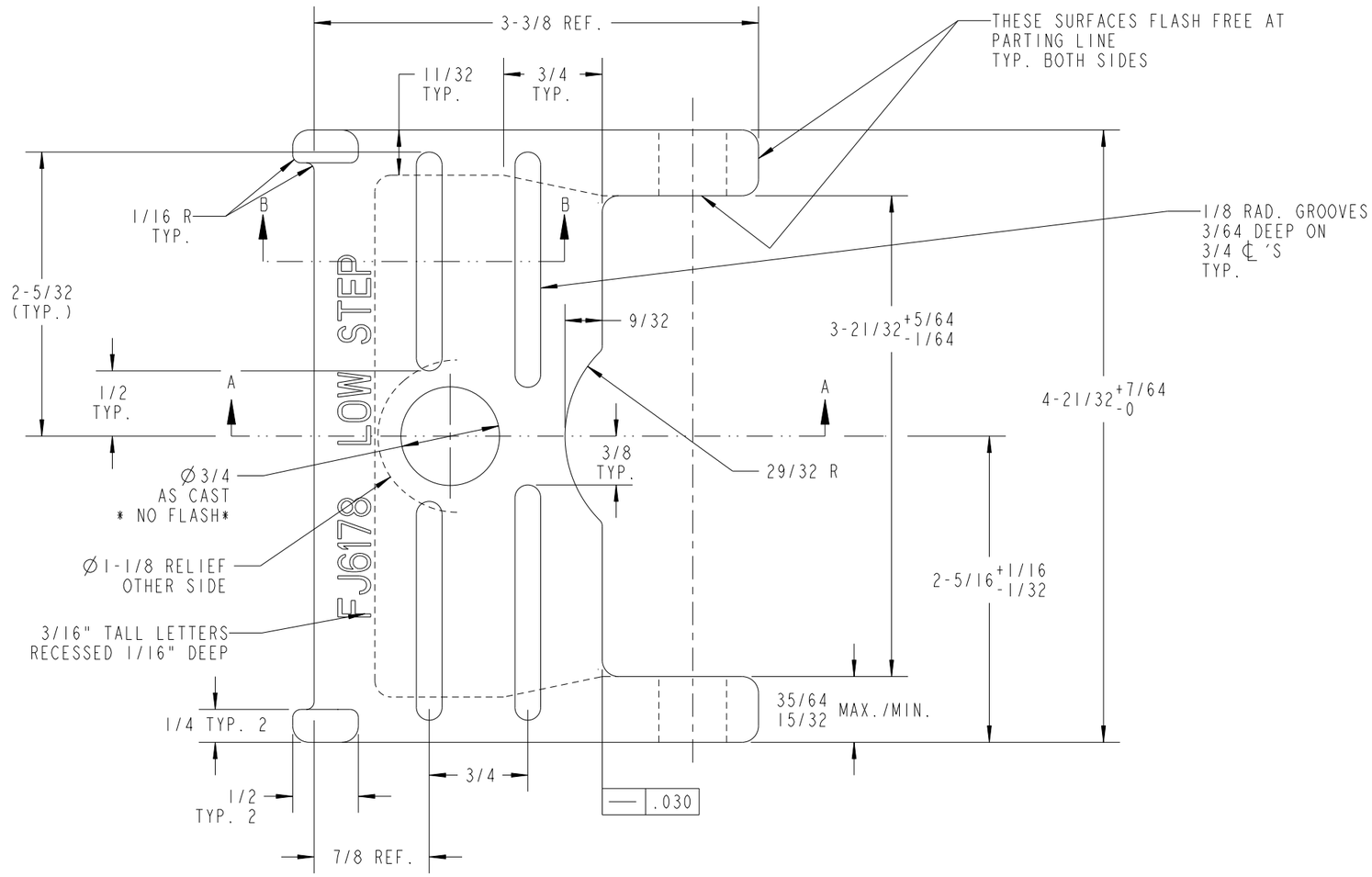

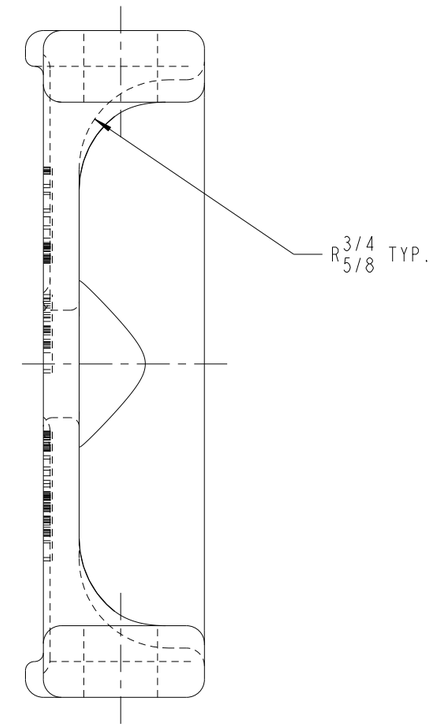

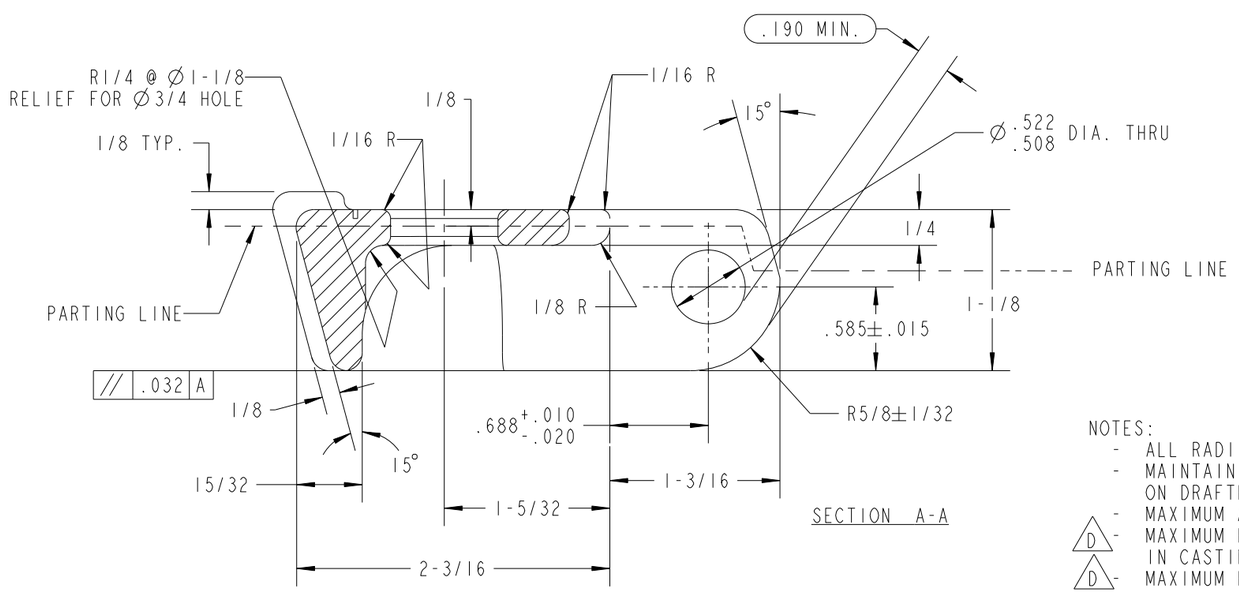

SECTION A-A

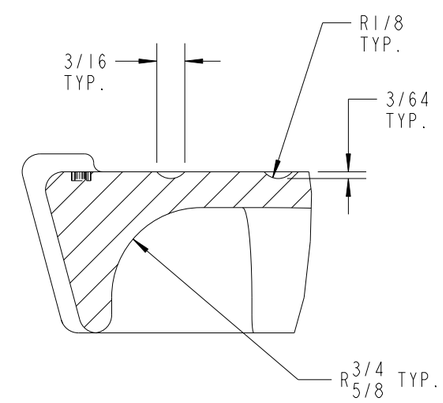

SECTION B-B

NOTES:
- ALL RADII NOT SHOWN 1/16"
- MAINTAIN MINIMUM THICKNESS DIMENSIONS ON DRAFTED SECTIONS
- MAXIMUM ALLOWABLE CARBIDE LEVEL IS 5%.
- (D) MAXIMUM HOLE DIAM. 0.09" DUE TO DIRT/SLAG/DEBRIS IN CASTING PROCESS
- (D) MAXIMUM EXTERNAL FLASH 0.06"

REV	CO NUM	DATE	BY
D	11144	11-26-19	CTE/RJS
C	6456	2-6-06	KWS/JC
B	5729.2	11/14/03	JTS/RTS
A	5460	5-26-03	JC/JTS
-	ISSUE 5525	1/8/03	JTS/RTS

TOLERANCE UNLESS OTHERWISE SPECIFIED:
FRACTIONAL DIMENSIONS: ± 1/32" (< 12") ± 1/16" (> OR = 12")
DECIMAL DIMENSIONS: ± .010"
ANGULAR DIMENSIONS: ± 1°
WELD BEAD SIZE: +1/8"/-0 WELD BEAD LENGTH: +1/2"/-0 WELD BEAD POSITION: ±1/2"
NOTES:

THIRD ANGLE PROJECTION
DO NOT SCALE DRAWING
UNLESS OTHERWISE SPECIFIED: ALL DIMENSIONS IN INCHES 1/32" MIN. CORNER BREAK REMOVE ALL BURRS

The design and detail illustrated in this drawing is the property of Rotary Lift. It is being loaned with the expressed condition that it will not be duplicated or used except by permission and is subject to return upon request.

LOW STEP ADAPTER

ROTARY LIFT
A DOVER COMPANY

DRAWN	SCALE	SHEET
JTS	1:1	1 of 1
APPROVED RTS	DATE 11/27/2002	DRAWING NUMBER FJ6178

BRINELL HARDNESS RANGE: 150-200
DUCTILE IRON ASTM A536 GRADE 60-40-18 ANNEALED
MATERIAL DESCRIPTION