NAME	DATE	TIME (HRS)

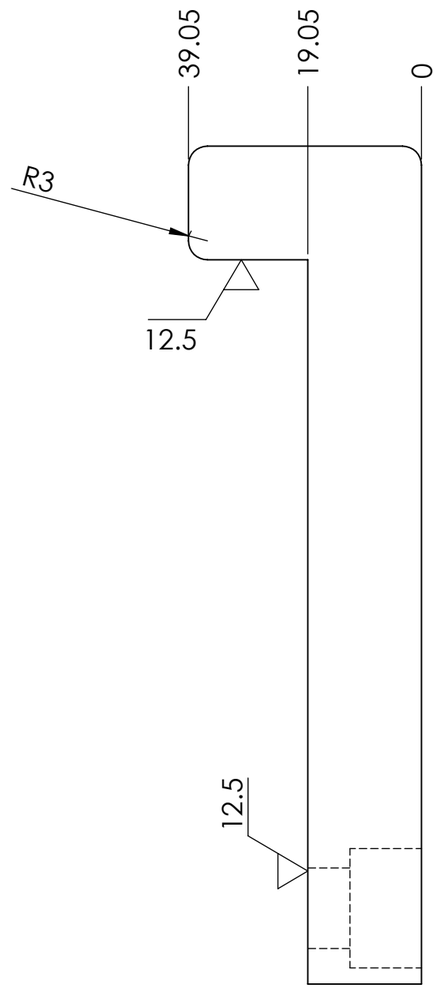

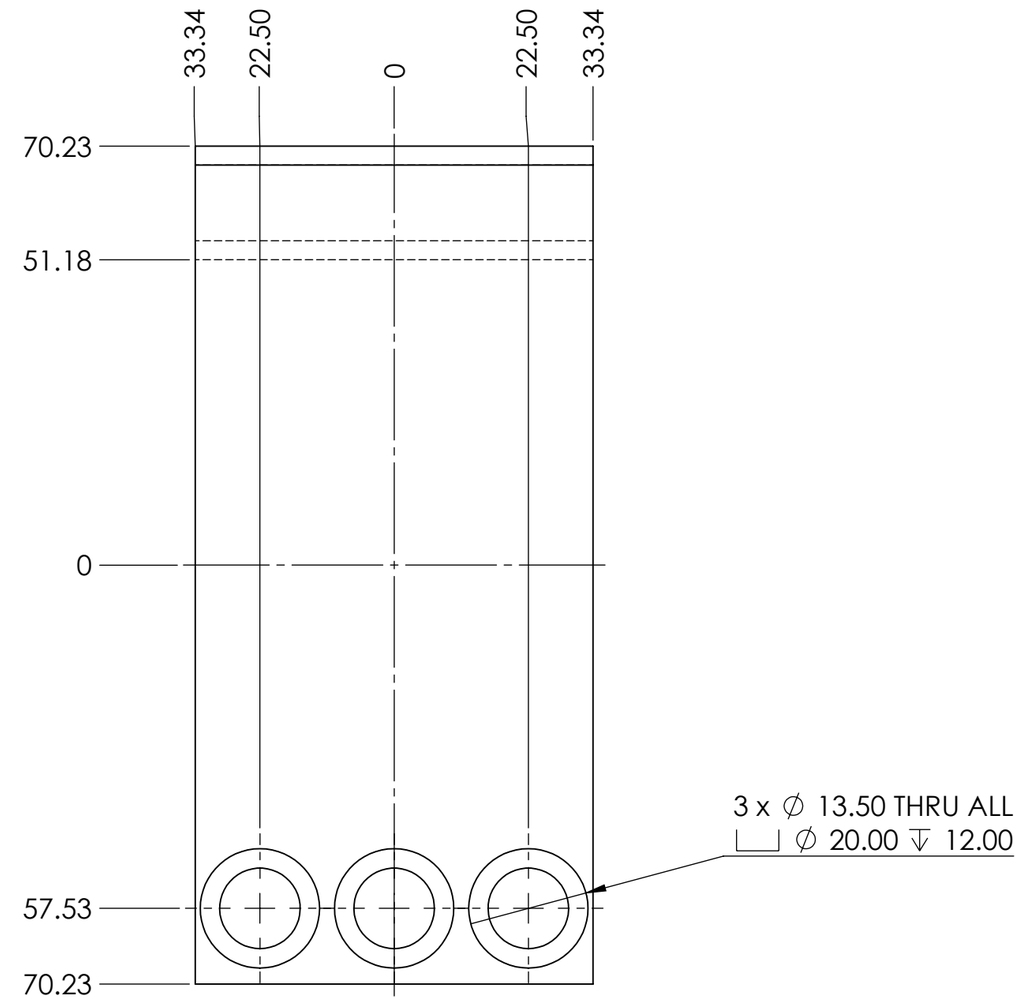

JAPM003-AC-600-004

PAG. 1 de 1

E MEDIDA ESPECIAL

ALL TECHNICAL DATA DISCLOSED HERE IN IS THE PROPERTY OF JOYSON SAFETY SYSTEMS AND SHALL NOT BE USED BY ANY OTHER MANUFACTURER, PROCUREMENT OR DISCLOSURE WITHOUT WRITTEN PERMISSION OF THE OWNMER.

AUTHORIZE	TALLER	QUALITY

NOTES:
Pieza libre de filos y rebabas.

REV	DESCRIPTION	DATE	APPROVED

REVIEWS

TOTAL OF PIECES: 4 Pza.

ANG. PROF

UNLESS OTHERWISE SPECIFIED

TOLERANCES DIMENSIONS	ISO 2768-1 mK-E ASME Y14.5M-1994	
MM	INCHES	ANGLES
+.1 -.1	+.004 -.004	+1° -1°

MATERIAL: 4140T

SURFACE TREATMENT: Galvanizado

HARDNESS: HRC 56-58

JOYSON SAFETY SYSTEMS

APPROVALS		DATE
DESIGNER	GFM	05/07/2022
REVIEW	EG	05/07/2022

JOYSON TECHNICAL CENTER

MODEL NAME | SERIES No

MACHINE NAME

PART NUMBER: JAPM003-AC-600-004

SIZE	PART NAME	REV.
B	FIXTURE BASE 2	A

ESCALE: 1:2 | DRAWING IN MILLIMETERS

TKH-MTC-MF-FM-0016-005