| General Dimension Tolerance | | | |
|---|---|---|---|
| 0 ~ 4 | ±0.1 | 16 ~ 63 | ±0.3 |
| 4 ~ 16 | ±0.2 | 63 ~ | ±0.5 |

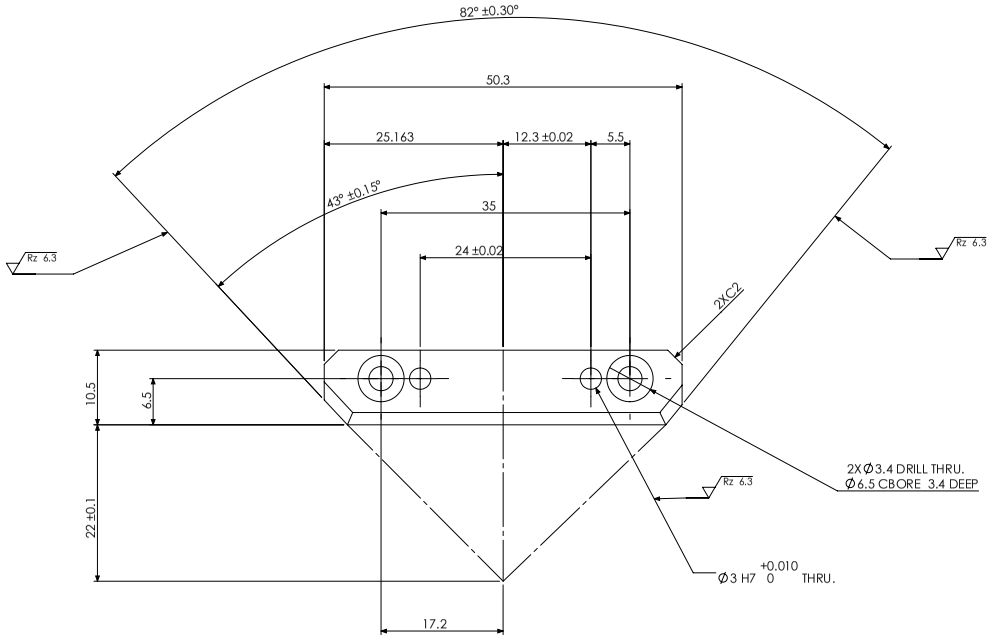


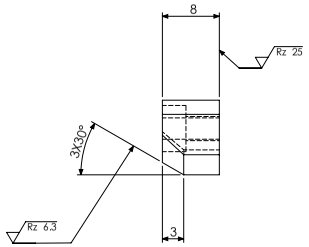


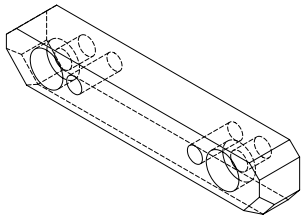

NOTE: ALL EDGES MUST BE C0.5 UNLESS OTHERWISE SPECIFIED

Rz 100 ( Rz 25 Rz 6.3 )

| SURFACE TREATMENT | HEAT TREATMENT | WEIGHT |
|---|---|---|
| MICr-20±4μm<br>ALL PART | | |
| MATERIAL: HPM1 (AISIP 21) | RESEMBLANCE PART No.: | INFO CODE / I/O CODE |
| PART NAME: GUIDE | | |
| DENSO MEXICO | DWG NO. M-1059916-020 | A2 / A3P CODE / SHEET 1 OF 1 |
| APPROVED / CHECKED / CHECKED / DISIGNED / DRAWN | QTY.:1 No.: 2 | SCALE:5:1 |

CONFIDENTIAL