General Dimension Tolerance			
0 ~ 4	± 0.1	16 ~ 63	± 0.3
4 ~ 16	± 0.2	63 ~	± 0.5

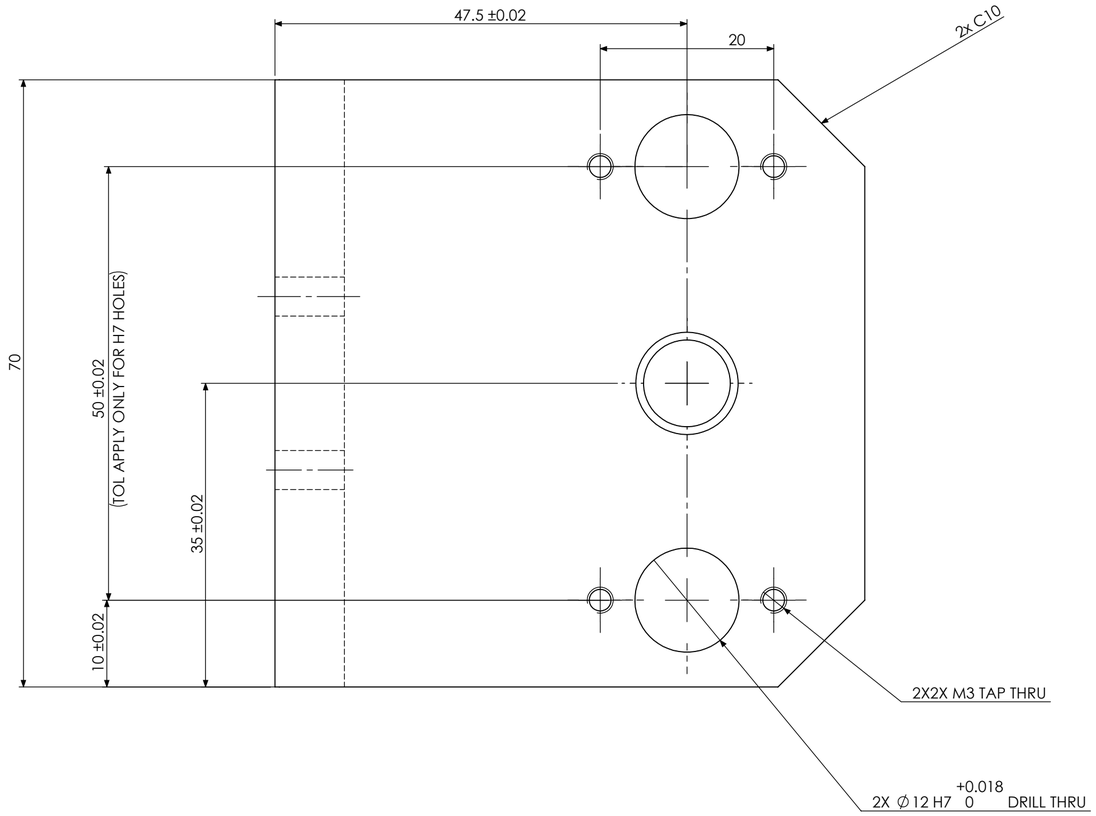

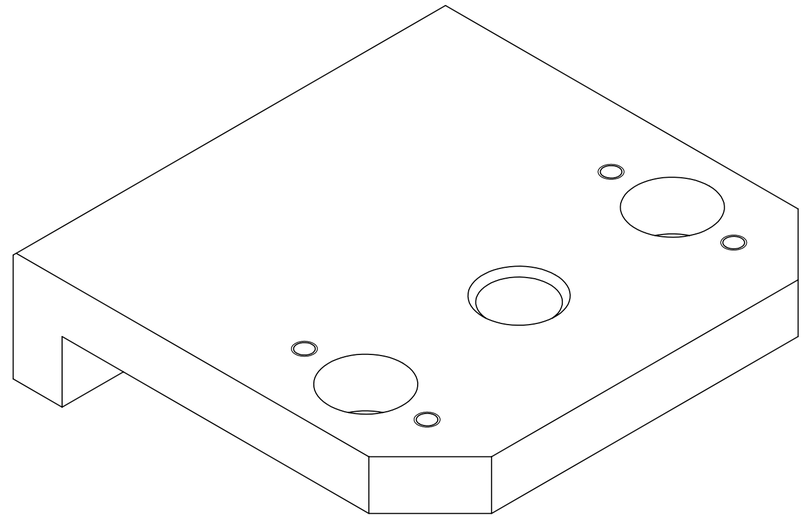

ISOMETRIC DRAWING

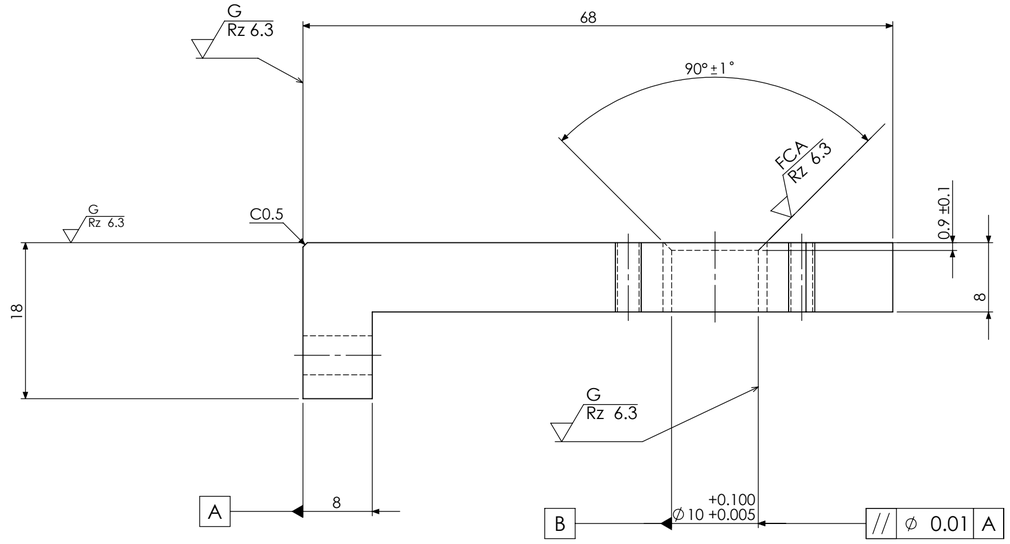

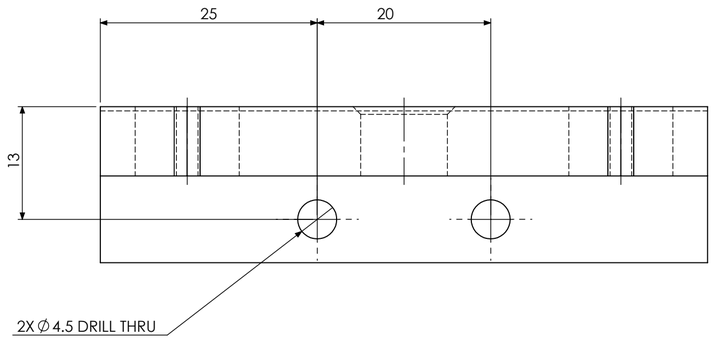

100 (FCA Rz 6.3 G Rz 6.3)

NOTE: ALL EDGES MUST BE C0.3 UNLESS OTHERWISE SPECIFIED

NOTE:DIMENSIONS AND TOLERANCE ARE AFTER PLATING

SURFACE TREATMENT	HEAT TREATMENT	WEIGTH
/	/	
ELp-Fe/Ni P5		
MATERIAL:	RESEMBLANCE PART No.	IMPO CODE / I/O CODE
S45C (AISI 1045)		
PART NAME	STAY	
DENSO MEXICO	DWG NO. M-4016481-131	A2 / ASP CODE / SHEET 1 OF 1
APPROVED / CHECKED / CHECKED / DESIGNED / DRAWN	QTY.: 1	No.: 13 / SCALE:2:1

CONFIDENTIAL