NAME	DATE	TIME (HRS)

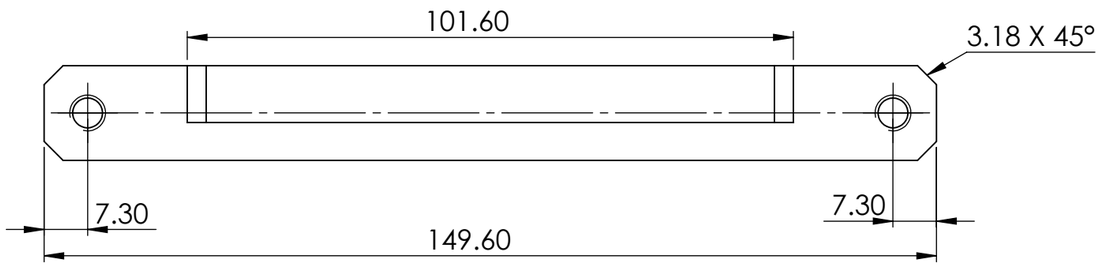

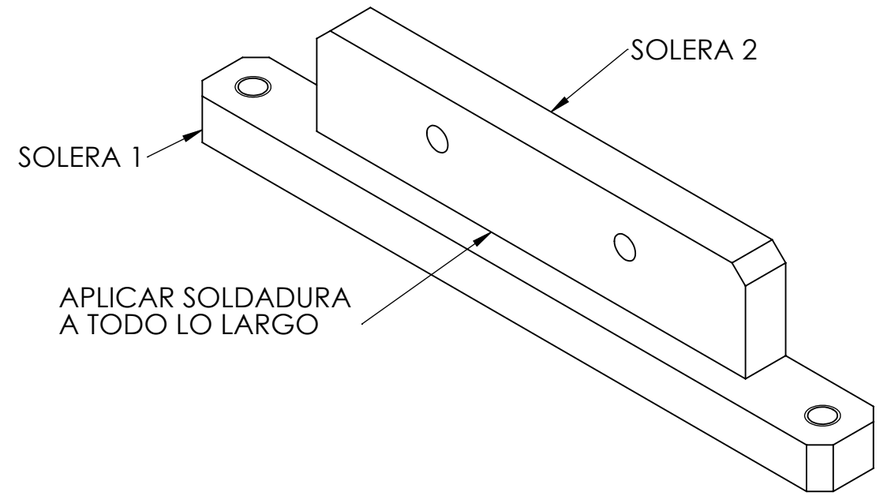

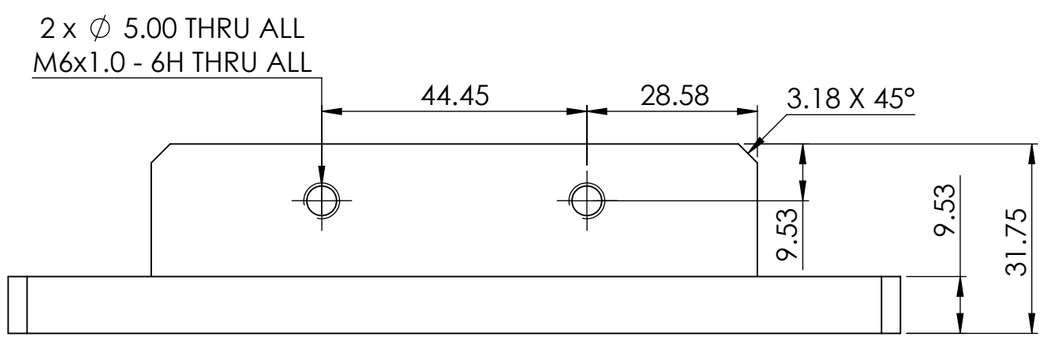

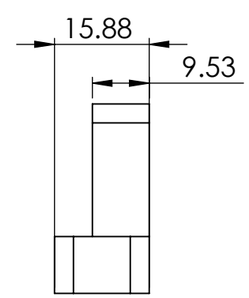

NCI002-TRN-101-004

PAG. 1 de 1

MEDIDA ESPECIAL

ALL TECHNICAL DATA DISCLOSED HERE IN IS THE PROPERTY OF JOYSON SAFETY SYSTEMS AND SHALL NOT BE USED BY ANY OTHER MANUFACTURER, PROCUREMENT OR DISCLOSURE WITHOUT WRITTEN PERMISSION OF THE OWNMER.

AUTHORIZE	TALLER	QUALITY

NOTES:

Pieza libre de filos y rebabas.

REV	DESCRIPTION	DATE	APPROVED

REVIEWS

TOTAL OF PIECES: 1 Pza.

ANG. PROF

UNLESS OTHERWISE SPECIFIED

TOLERANCES DIMENSIONS: ISO 2768-1 mK-E ASME Y14.5M-1994

MM	INCHES	ANGLES
+.1 -.1	+.004 -.004	+1° -1°

MATERIAL: A36 Steel

SURFACE TREATMENT: N.A.

HARDNESS: N.A.

JOYSON SAFETY SYSTEMS

APPROVALS		DATE
DESIGNER	LGG	22-Jul-19
REVIEW	JEC	22-Jul-19

JOYSON TECHNICAL CENTER

MODEL NAME	NCI002-TRN	SERIES No	M2019-099
MACHINE NAME	Daimler BR167DAB		
PART NUMBER	NCI002-TRN-101-004		
SIZE **B**	PART NAME NCI002-TRN-101-004		REV. **A**
ESCALE: 1:1		DRAWING IN MILLIMETERS	

TKH-MTC-MF-FM-0016-005