General Dimension Tolerance			
0 ~ 4	± 0.1	16 ~ 63	± 0.3
4 ~ 16	± 0.2	63 ~	± 0.5

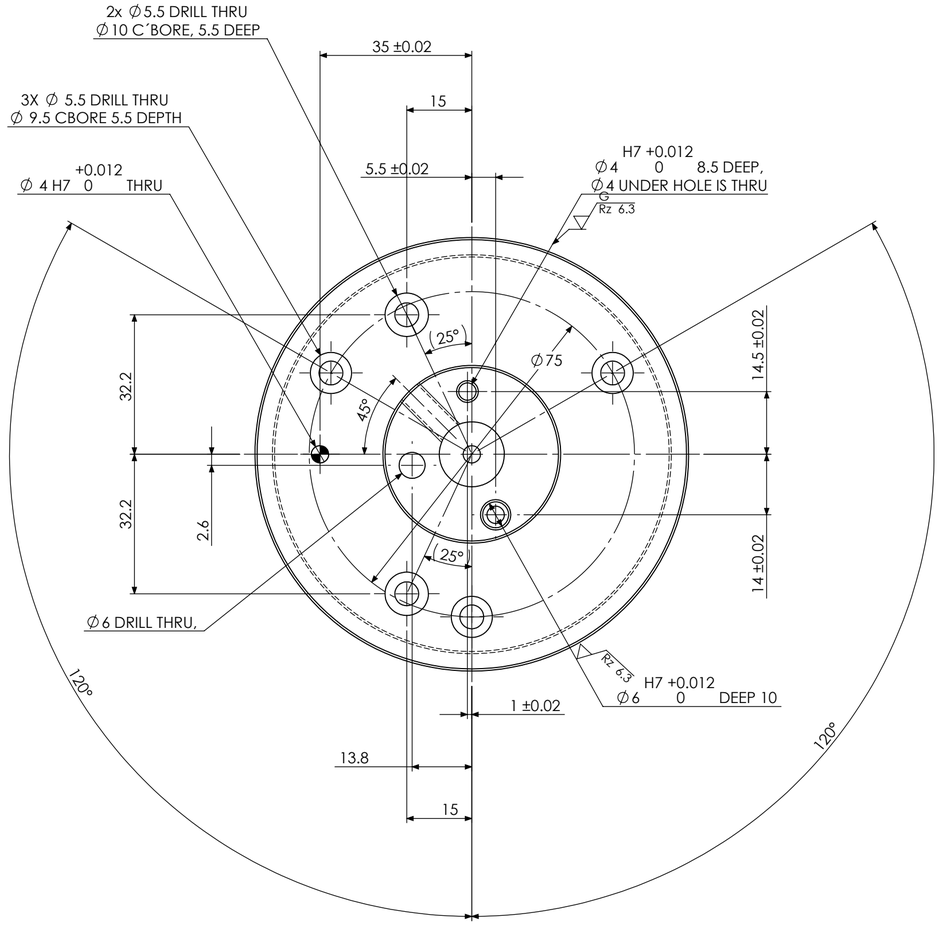

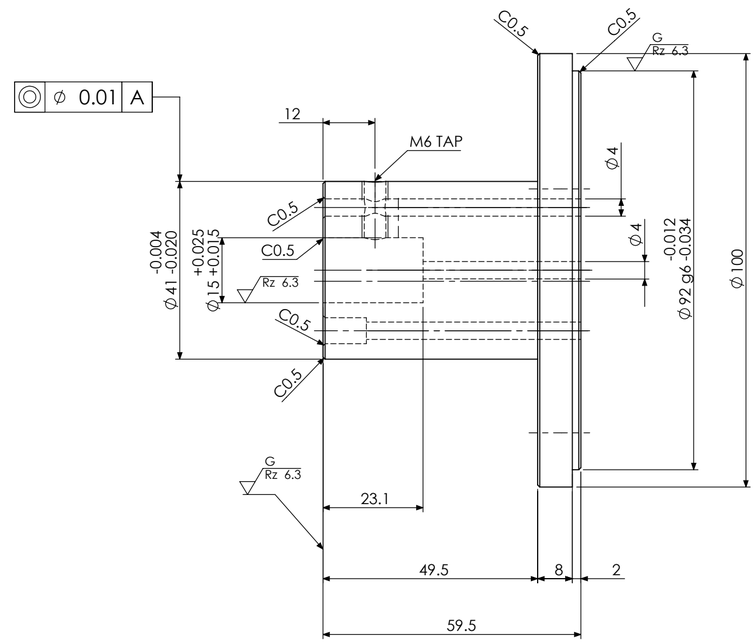

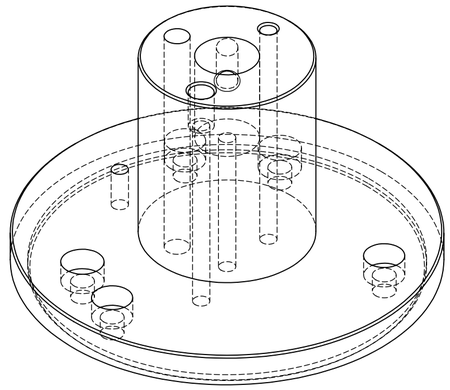

NOTE: DIMENSION AFTER PLATING Rz 100 (G Rz 6.3)

SURFACE TREATMENT	HEAT TREATMENT	WEIGHT
MICr-20 +/- 4 µm ALL PART	HRC 61~63 QT	1

MATERIAL:	RESEMBLANCE PART No.	IMPO CODE	I/O CODE
SKD11 (ASTM A681 D2)			

PART NAME: WORK RECEIVER 4550 MODEL

DENSO MEXICO					DWG NO.		ASP CODE	SHEET
APPROVED	CHECKED	CHECKED	DESIGNED	DRAWN	M-4071750-050	A2		1 OF 1
					QTY.: 1	No.: 5		SCALE:1:1

CONFIDENTIAL