General Dimension Tolerance			
0 ~ 4	± 0.1	16 ~ 63	± 0.3
4 ~ 16	± 0.2	63 ~	± 0.5

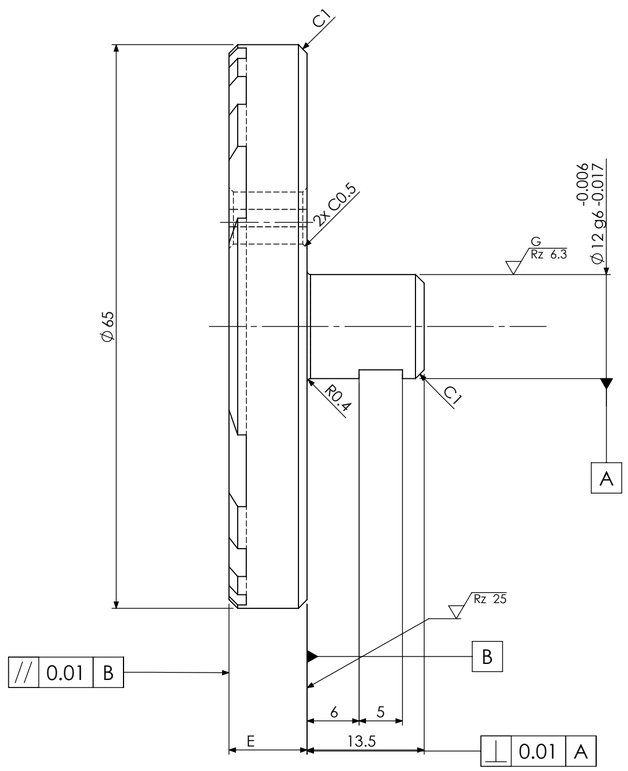

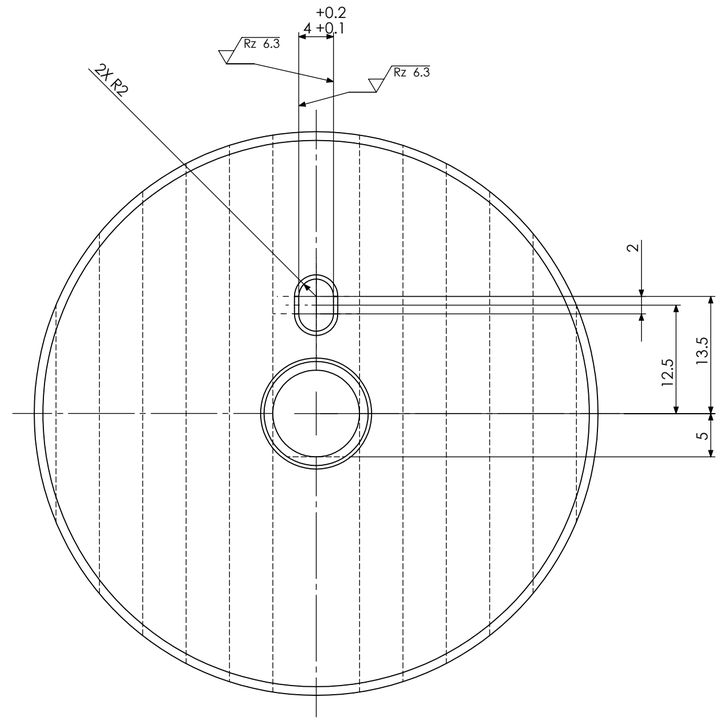

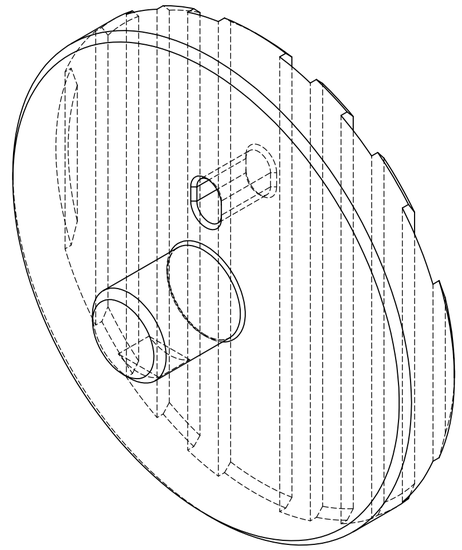

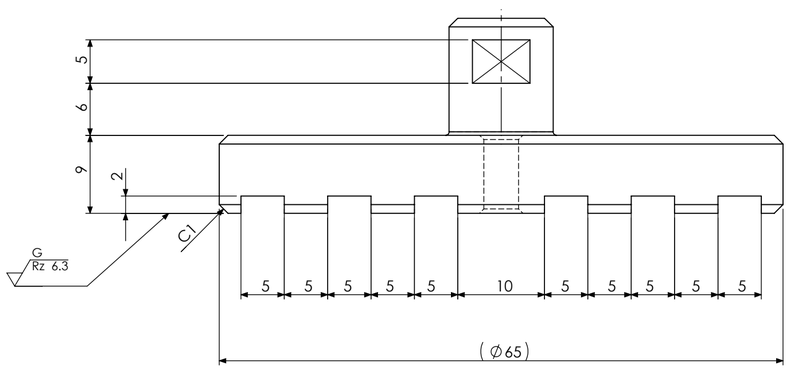

DIMENSION VALUE TABLE:

MODEL	DIMENSIOIN "E"
4330 / 4440	7.7±0.1
4320	5.8±0.1

Rz 100 (G Rz 6.3)

UNLESS OTHERWISE SPECIFIED CHAMFER ALL CORNERS TO C0.5mm.

SURFACE TREATMENT	HEAT TREATMENT	WEIGHT
MICr-20±4μm	HRC 60-62	
ALL PART	QT	

MATERIAL:	RESEMBLANCE PART No.	IMPO CODE	I/O CODE
SKD11 (ASTM A681 D2)			

PART NAME: PUNCH

DENSO MEXICO

APPROVED	CHECKED	CHECKED	DESIGNED	DRAWN

DWG NO. M-1059913-390 | A2 | ASP CODE | SHEET 1 OF 1

QTY.: 2 | No.: 39 | SCALE:2:1

CONFIDENTIAL