NAME	DATE	TIME (HRS)

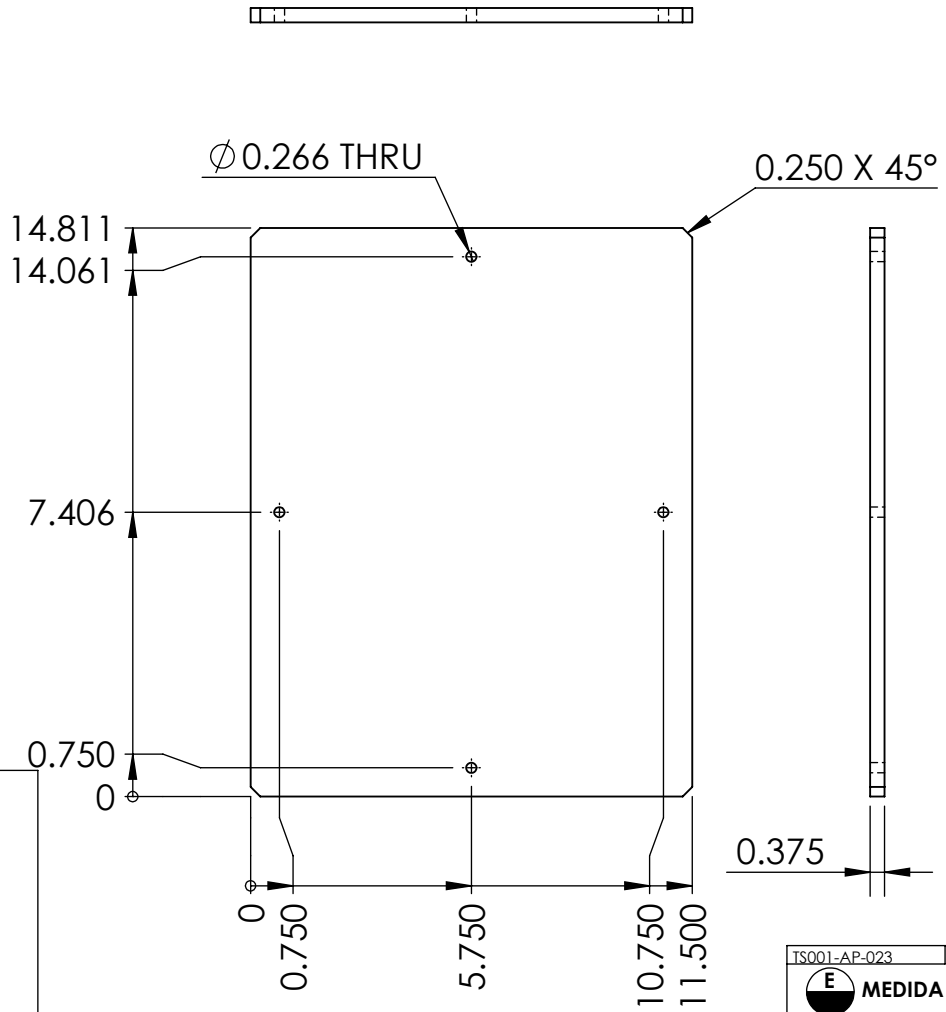

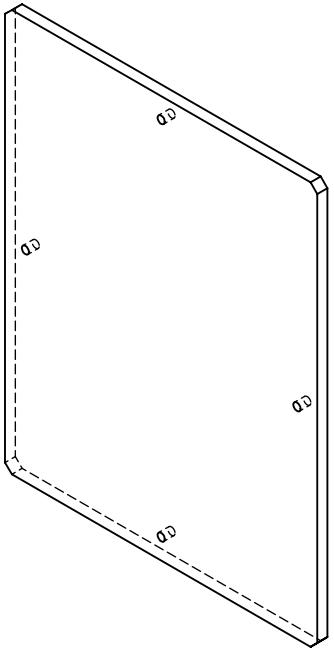

QUALITY

AUTHORIZE

TALLER

NOTES: DEJAR PIEZA LIBRE DE REBABA Y MATAR FILOS.

SHEET 1 OF 1

TOTAL OF PIECES	2Pzas.
ANG. PRO	

REV	DESCRIPTION	DATE	APPROVED

REVIEWS

UNLESS OTHERWISE SPECIFIED

TOLERANCES DIMENSIONS ISO 2768-1 mK-E ASME Y14.5M-1994

MM	INCHES	ANGLES
+.1 -.1	+.004 -.004	+1°-1°

MATERIAL: MICARTA

SURFACE TREATMENT N.A.

HARDNESS N.A

TS001-AP-023

E MEDIDA ESPECIAL

TAKATA

APPROVALS	DATE
DESIGNER JEHC	19/10/2018
REVIEW JATA	19/10/2018

ALL TECHNICAL DATA DISCLOSED HERE IN IS THE PROPERTY OF TAKATA SEAT BELTS INC. AND SHALL NOT BE USED BY ANY OTHER MANUFACTURER, PROCUREMENT OR DISCLOSURE WITHOUT WRITTEN PERMISSION OF THE OWNMER.

TAKATA MONTERREY TECHNICAL CENTER

MODEL NAME: TS001-AP SERIES No: 2018-111

MACHINE NAME: THERMO-SHRINK

PART NUMBER: TS001-AP-023

SIZE	PART NAME	REV.
A	PART 023	A

ESCALE 1:5 **DRAWING IN** INCHES

TKH-MTC-MF-FM-0016-004