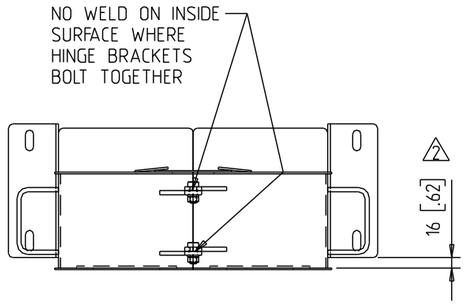

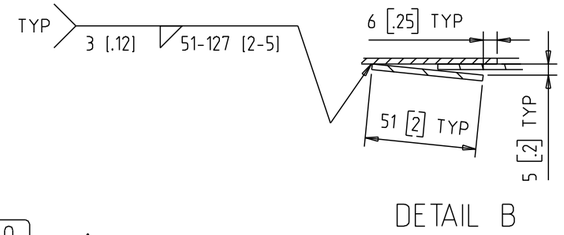

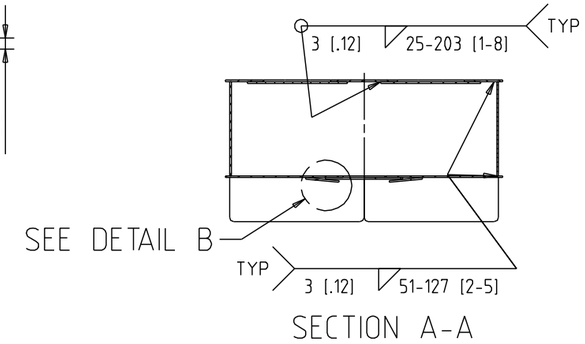

ITEM NO.	ITEM QTY.	MAT'L DESCRIPTION	MAT'L QTY.	MAT'L PART NO.
1	1	12 GA SHEET	6 LBS	WPL12GA
2	2	12 GA SHEET	11 LBS	WPL12GA
3	1	12 GA SHEET	6 LBS	WPL12GA
4	2	12 GA SHEET	9 LBS	WPL12GA
5	2	MOUNTING BRACKET	EA	ZMB87245B
6	2	12 GA SHEET	1 LBS	WPL12GA
7	2	12 GA SHEET	1 LBS	WPL12GA
8				
9	2	EXPANDED METAL	1 SQ FT	WEX48X96X51215
10	2	LIFT HANDLE	EA	ZLH68792
11	4	HINGE BRACKET	EA	ZHB68816
12	2	M10 BOLT - 1 NUT - 1 WASHER	EA	M10H2-25VJ

MATERIAL : WARMAN CODE E02 UNLESS OTHERWISE SPECIFIED.
ESTIMATED MASS : 18,6 kg [41 LBS]

SEE SHEET 2 FOR ADDITIONAL ITEM DETAILS

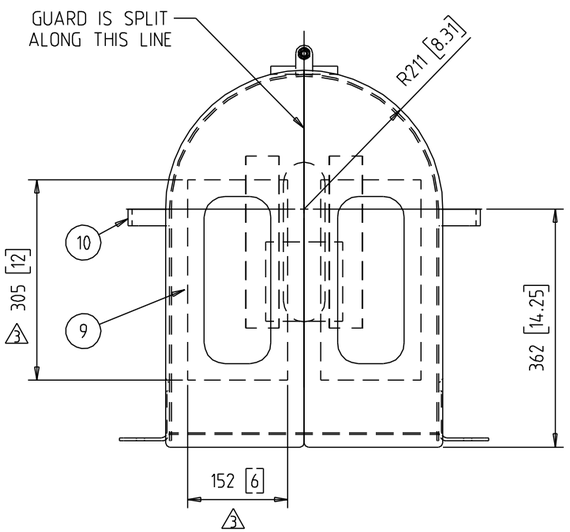

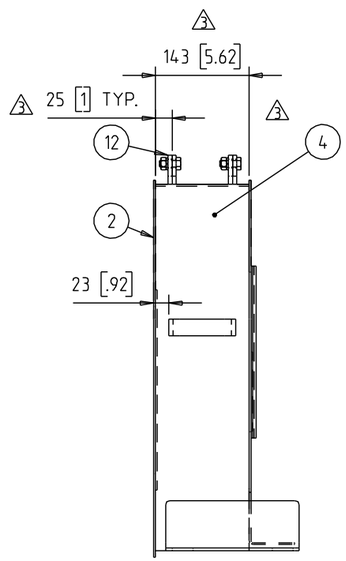

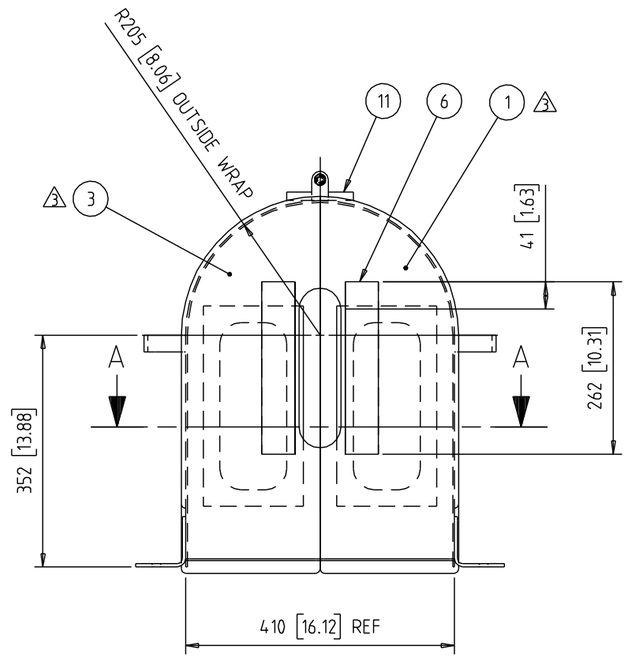

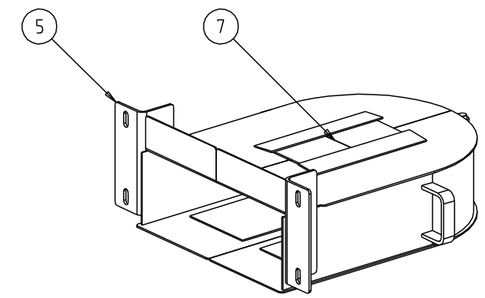

NOTES:
1.) STEEL TO BE ASTM-A-36 OR EQUAL.
2.) WELDING MUST CONFORM TO CYCLICALLY (DYNAMICALLY) LOADED STRUCTURES OF THE A.W.S.-D-1.1 CODE EXCEPT THAT UNDERCUT IS NOT PERMITTED.
3.) ALL WELDS TO BE 2 [.09] CONTINUOUS FILLET UNLESS OTHERWISE SPECIFIED.
4.) ONLY QUALIFIED OR PREQUALIFIED WELDING PROCEDURE SPECIFICATIONS (WPS) MAY BE USED IN WELDING.
5.) WELDERS MUST BE CERTIFIED FOR THE PROCESS AND POSITION BEING USED.
6.) ALL WELDMENTS ARE SUBJECT TO VISUAL INSPECTION BY A C.W.I.
7.) REMOVE ALL BURRS AND SHARP EDGES.
8.) SURFACE PREPARATION AND PAINTING PROCUDURE SHOULD BE IN ACCORDANCE WITH APPLICABLE SECTIONS OF THE STRUCTURAL STEEL PAINT COUNCIL SPECIFICATIONS
9.) STAMP PART No. USING 8 [.31] HIGH NUMERALS
10.) DIMENSIONS SHOWN THUS [ ] ARE IN INCHES

FOR LIMITS OF UNTOLERANCED DIMENSIONS REFER TO DRG. A388878.

Copyright © Weir Slurry Group Inc. 2009

Weir Slurry Group Inc. ("the Company") is the owner of the copyright and all confidential information in this drawing. The drawing must not be copied in whole or in part, in any form or by any means, and the information in it must not be disclosed to any person, or used for any purpose other than the specific purpose for which it has been provided, without the prior written consent of the Company.

No.	DESCRIPTION	BY	DATE	CHK
3	DIM 143 [5.625] WAS 152 [6]; NOTE 3 DIM WAS 3 [.12]; DEL TOL BLOCK & DIM 102 [4]; ADD TOL NOTE; BOM - UPDATE FORMAT, ITEM 1 WAS QTY 2, ADD ITEM 3; ADD - DIMS 305 & 152, ITEM 1 AND 3 BALLOONS TO BACK VIEW, MATERIAL & ESTIMATED MASS; SEE SHEET 2; EDR971; DR109332MAD	DAB	NOV.9,2009	JKS
2	ITEMS 1,2,4,5,7, & 9 HAVE BEEN UPDATED, ITEMS 3 & 8 HAVE BEEN REMOVED, ADDED SHEET 2	SDO	NOV.08,2008	JKS
1	"DETAIL OF ITEM 3" WAS "DETAIL OF ITEM 2"; ITEM 8 BALLOON WAS ITEM 7 BALLOON; DR101470	EAK	APR.5,2006	ERF

REVISIONS

APP.	MW
CHECK	DZ
DRN.	E.KISTER
DATE	DEC.1,2005
SCALE	

PRODUCT : WARMAN PUMP

TITLE : BELTGUARD, "PV" SHAFT DOWN ARRANGEMENT 145T-215T, ZBG83047

WEIR MINERALS

WEIR MINERALS NORTH AMERICA
DESIGN CENTRE OF ORIGIN : MADISON

DRAWING No. A2-110-0-383047
SHEET 1 OF 2

REV. 3

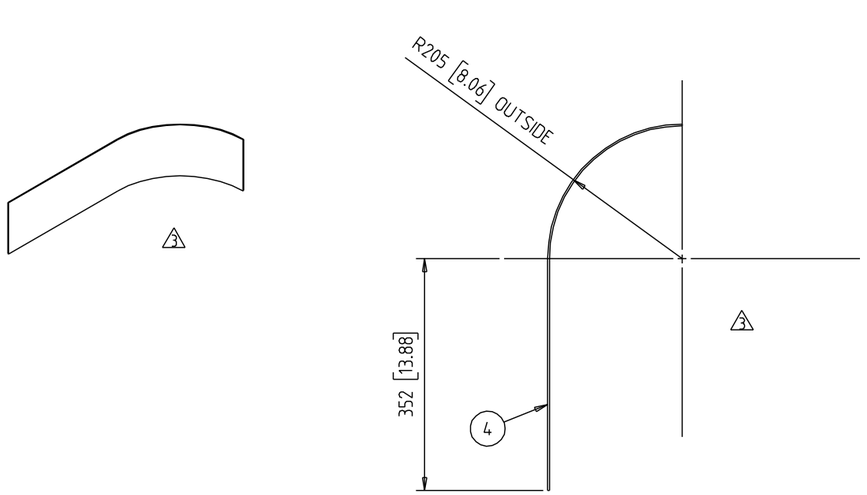

DETAIL ITEM 4 3

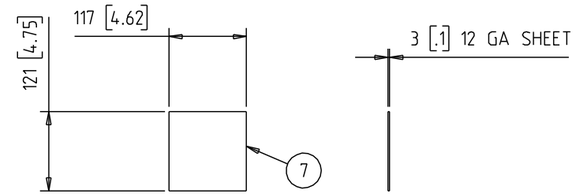

DETAIL ITEM 7

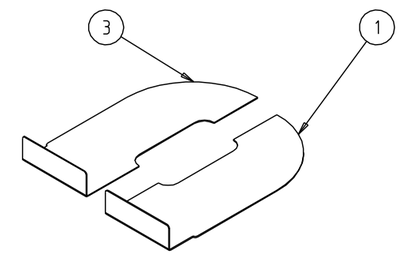

3

DETAIL ITEM 1 & 3

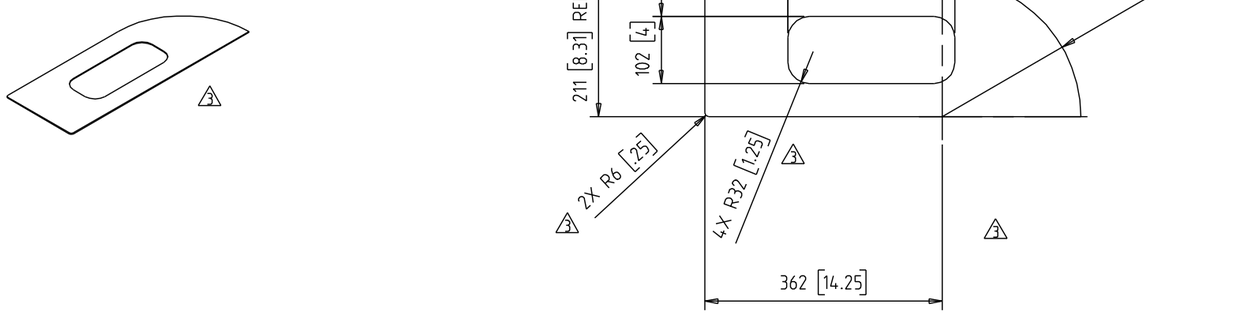

DETAIL ITEM 2 3

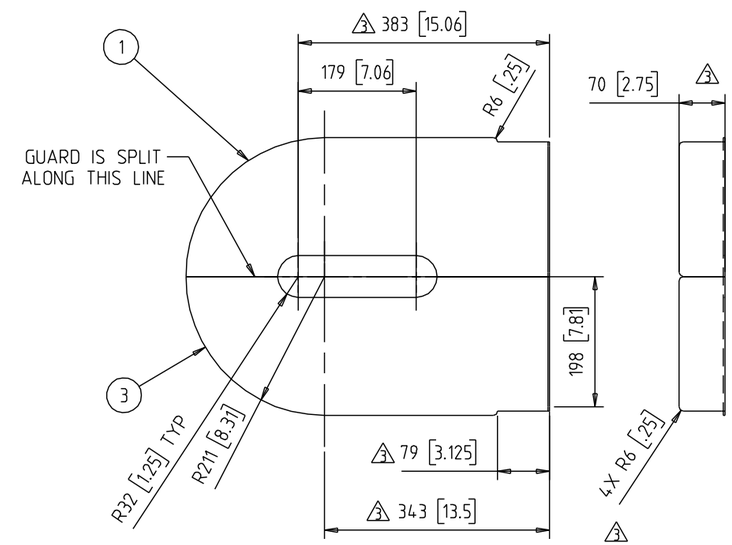

ALL DIMENSIONS ON THIS SHEET
ARE TYPICAL FOR EACH FORMED HALF

3 FOR LIMITS OF UNTOLERANCED DIMENSIONS REFER TO DRG. A388878.

Copyright © Weir Slurry Group Inc. 2009

Weir Slurry Group Inc. ("the Company") is the owner of the copyright and all confidential information in this drawing. The drawing must not be copied in whole or in part, in any form or by any means, and the information in it must not be disclosed to any person, or used for any purpose other than the specific purpose for which it has been provided, without the prior written consent of the Company.

No.	DESCRIPTION	BY	DATE	CHK
3	ITEM 1 DETAIL - DIM 383 WAS 392, 79 WAS 89, 343 WAS 352, 70 WAS 44, ADD DIM 4X R6 [.25], VIEW LABLE, DETAIL ITEM 2 - DEL HALF OF ISO AND DETAIL VIEW, REARRANGE DIMS, ADD VIEW LABEL; DETAIL ITEM 4 - DIM 143 WAS 152, DEL HALF OF ISO AND DETAIL VIEW, ADD VIEW LABLE, DEL TOL BLOCK; ADD TOL NOTE; SEE SHEET 1; EDR971; DR109332MAD	DAB	NOV.9,2009	JKS
2	ADDED SHEET 2	SDO	NOV.08,2008	JKS
1	"DETAIL OF ITEM 3" WAS "DETAIL OF ITEM 2"; ITEM 8 BALLOON WAS ITEM 7 BALLOON; DR101470	EAK	APR.5,2006	ERF

REVISIONS

APP.	MW
CHECK	DZ
DRN.	E.KISTER
DATE	DEC.1,2005
SCALE	—

PRODUCT : WARMAN PUMP

TITLE : BELTGUARD, "PV" SHAFT DOWN ARRANGEMENT 145T-215T, ZBG83047

WEIR MINERALS

WEIR MINERALS NORTH AMERICA
DESIGN CENTRE OF ORIGIN : MADISON

DRAWING No. A2-110-0-383047
SHEET 2 OF 2

REV. 3