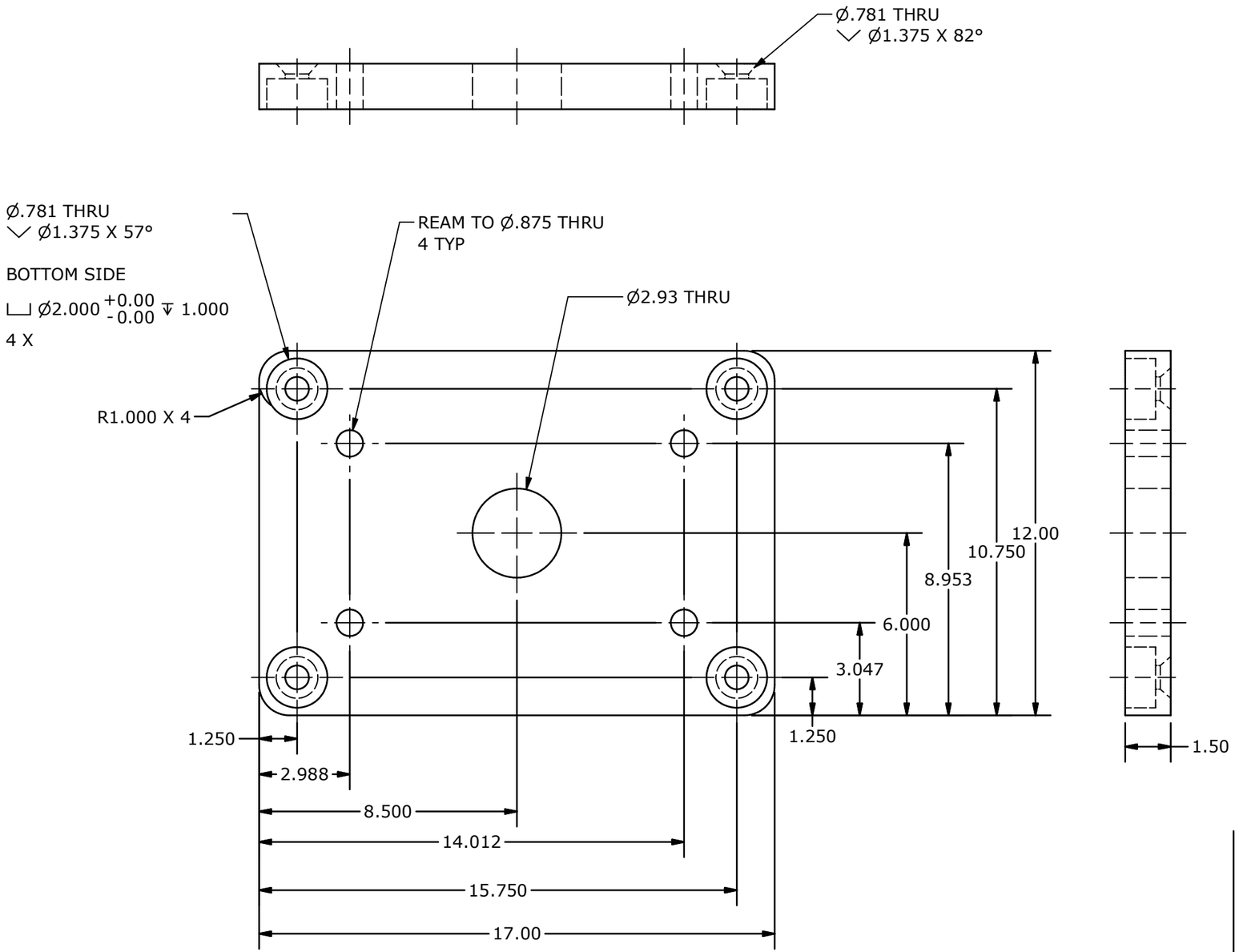

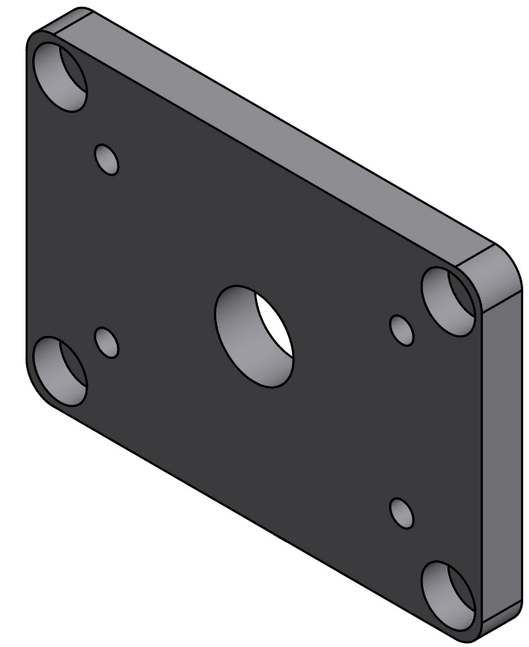

GENERAL NOTES:
Break All Sharp Corners

MASS: 78.6 lbmass

DET	QTY	MATERIAL	R/C
15	1	Steel, AISI 1018	

MATERIAL LIST
NO MATERIAL SUBSTITUTIONS
WITHOUT PRIOR TEMPEL APPROVAL

DIE NO.	SCALE	DATE
	1/4	9/2/2021
DWN DFOWLER	SHEET # 2	OF 8

PART NAME
T68070SD15-Pin Cylinder Mount.ipt

FILE NAME
T68070- Pin Press Assm

SYM	REVISIONS	BY	DATE

TOLERANCES UNLESS OTHERWISE SPECIFIED

.X	±	.050	FRACTIONS	± 1/16
.XX	±	.010	ANGLES	± 1°
.XXX	±	.002	ALL DIMENSIONS NON ACCUMULATIVE	
.XXXX	±	.0005		

TEMPEL

THIS DOCUMENT AND ITS CONTENTS ARE THE CONFIDENTIAL AND PROPRIETARY INTELLECTUAL PROPERTY OF TEMPEL STEEL COMPANY.
BY ACCEPTING THIS DOCUMENT YOU AGREE TO TREAT IT AND ITS CONTENTS AS CONFIDENTIAL. UNAUTHORIZED REPRODUCTION,
DISTRIBUTION, DISPLAY OR MISAPPROPRIATION OF THIS DOCUMENT OR ANY OF ITS CONTENTS, IN WHOLE OR IN PART, IS EXPRESSLY FORBIDDEN.

C:\Tempel Vault Workspace\Tempel\Manufacturing\Engineering\T68070 - Generac Rotor Depin And Burnish\T68070 - Pin Press Assm.idw