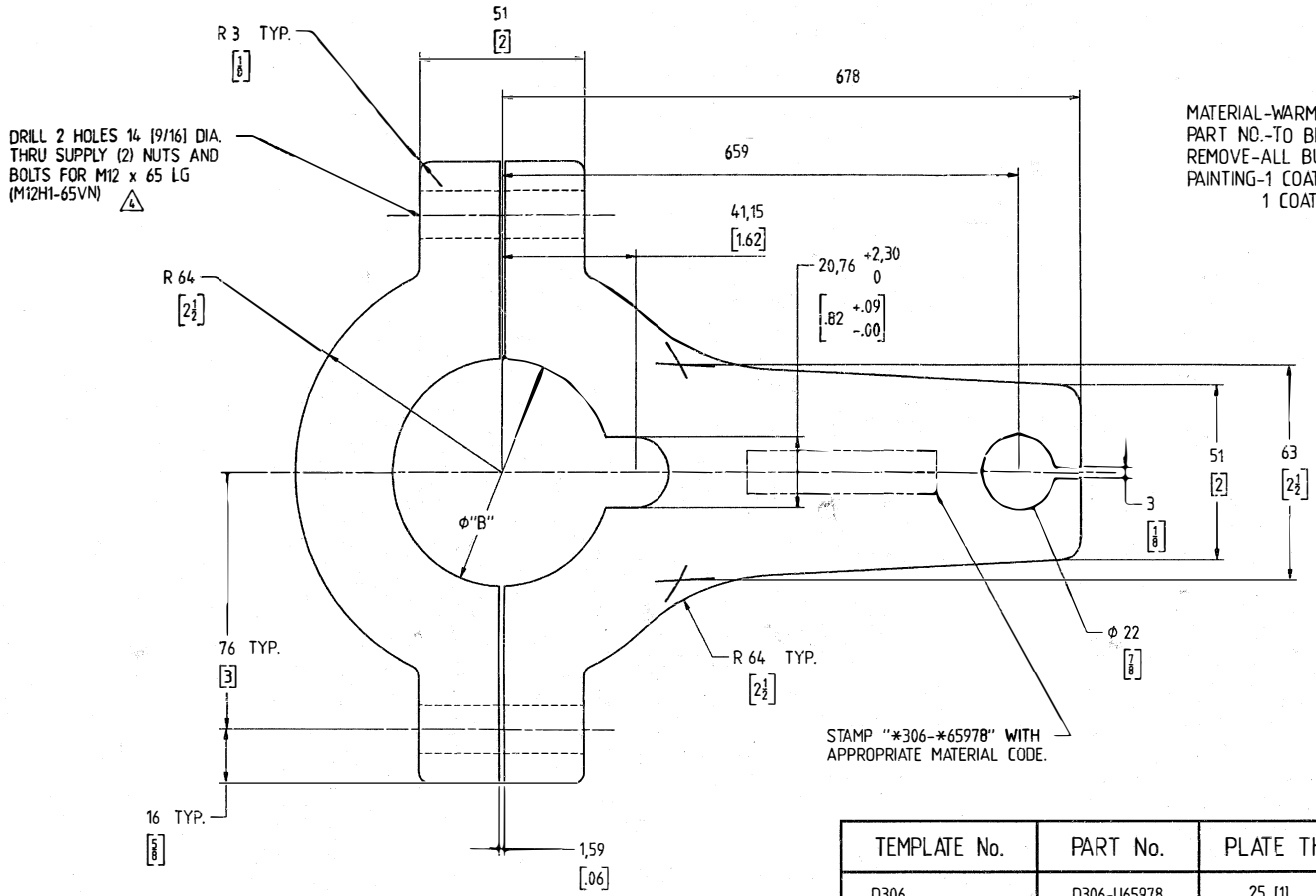

MATERIAL-WARMAN CODE "E02" UNLESS OTHERWISE SPECIFIED
PART NO.-TO BE STAMPED IN 12 [1/2] HIGH NUMERALS
REMOVE-ALL BURRS AND SHARP EDGES
PAINTING-1 COAT OF SUITABLE PRIMER
1 COAT OF SIGNAL RED B.S.537 OIL PAINT

TEMPLATE No.	PART No.	PLATE THICK	B: 0,8 [.031] / 0,0 [0.0]
D306	D306-U65978	25 [1]	66.55 [2.62]
D306M	D306-M65978	25 [1]	65.02 [2.56]

UNLESS OTHERWISE SPECIFIED: (FABRICATION)

TOLERANCE ON FABRICATION DIMENSIONS:
- LESS THAN 1219 [48"] ± 3 [1/8"]
- 1219 [48"] TO 3048 [120"] ± 6 [1/4"]
- OVER 3048 [120"] ± 9,5 [3/8"]

UNLESS OTHERWISE SPECIFIED: (MACHINING)

TOLERANCE ON MACHINING DIMENSIONS:
- 0,X ± 1,524 [.060]
- 0,XX ± 0,762 [.030]
- 0,XXX ± 0,254 [.010]
- 0,XXXX ± 0,127 [.005]
- ANGULAR ± 1°

ALL CONCENTRIC CIRCLES: ◎ 0,25 [.010] T.I.R.

ALL PERPENDICULAR SURFACES: ⊥ 0,05 [.002/INCH]

BREAK OR DEBURR ALL SHARP EDGES

INTERNAL CORNERS 0,000 [.000/0,813 [.032] R.

MACHINED SURFACES 3,2 [125]

SHOP	
AUSTR	
UK	
PROJ ENG	
DXF	
DIRECTORY	

© WARMAN INTERNATIONAL LTD. 1996. WARMAN INTERNATIONAL LTD. is the owner of the copyright subsisting in this drawing and these designs, specifications and instructions. They must not be used, reproduced or copied in whole or in part, in any form or by any means, nor may the information therein contained, which is confidential to WARMAN INTERNATIONAL LTD. be disclosed to any person, without the prior written consent of WARMAN INTERNATIONAL LTD. The drawing has been delivered and received on the express conditions that it may be used only for the specific purpose for which it has been provided, may not be used in any way which may injure or cause loss directly or indirectly to WARMAN INTERNATIONAL LTD. or any related corporation and will be returned to WARMAN INTERNATIONAL LTD. immediately on completion of the task for which it has been provided, or on demand.

No.	DESCRIPTION	BY	DATE	CHK
5				
4	M12H1-65VN WAS U08H1-010VN	RT	JAN.16,1998	JB
3	REDESIGNED AND REDRAWN	RK	MAR.12,1996	
2				
1				

REVISIONS

APP.	
CHECK	RT
DRN.	JHB
DATE	2/18/88
SCALE	

SHAFT WRENCH
DETAIL
*306-*65978 MODIFICADO EN LONGITUD

WARMAN INTERNATIONAL INC.
OFFICE OF ORIGIN : MADISON
Warman CAE-CAD-CAM

A2– 111 –1–65978
SHEET 1 OF 2

REV. 4

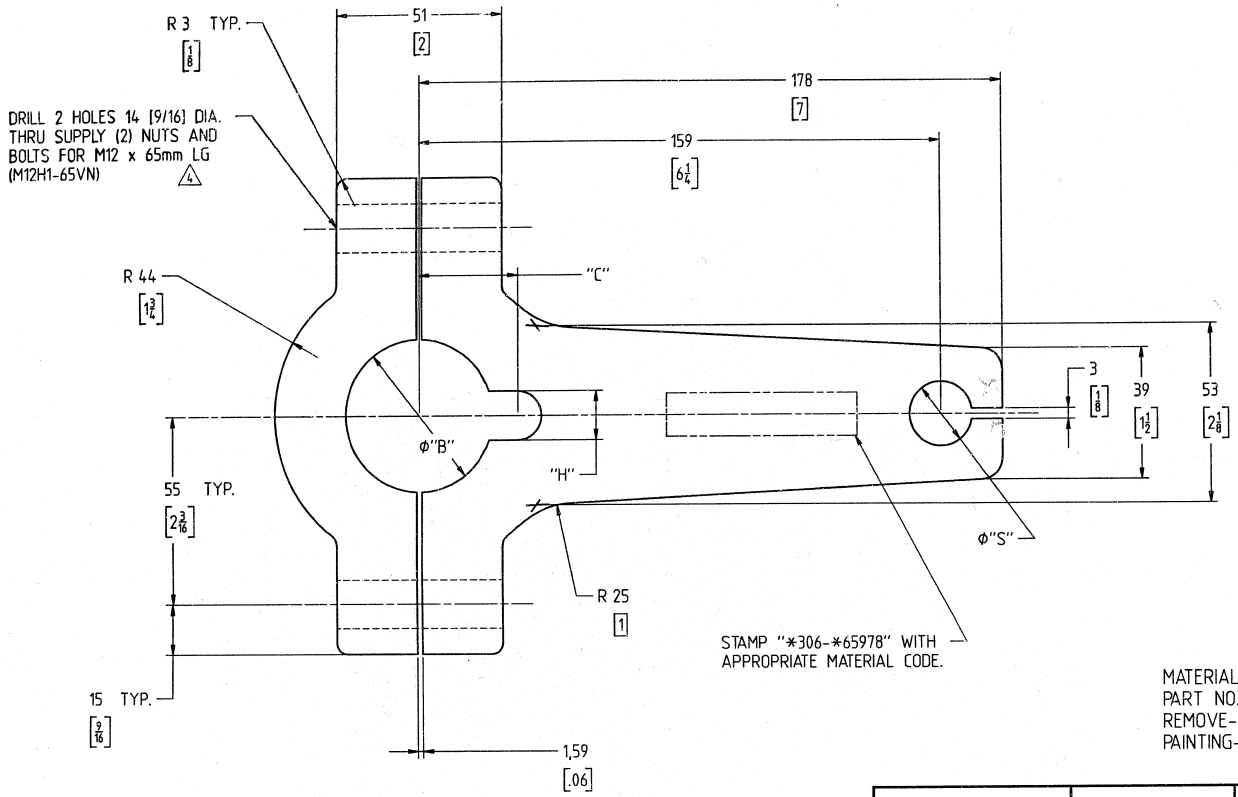

MATERIAL-WARMAN CODE "E02" UNLESS OTHERWISE SPECIFIED
PART NO.-TO BE STAMPED IN 12 [1/2] HIGH NUMERALS
REMOVE-ALL BURRS AND SHARP EDGES
PAINTING-1 COAT OF SUITABLE PRIMER
1 COAT OF SIGNAL RED B.S.537 OIL PAINT

BLANK PART No.	PART No.	PLATE THICK	B: 0,8 [.03] / 0,0 [0.0]	C	H: 2,3 [.09] / 0,0 [0.0]	S
C306	C306-U65978	25 [1.0]	44.45 [1.75]	30.23 [1.19]	12.700 [.500]	19 [3/4]
C306M	C306-M65978	25 [1.0]	41.91 [1.65]	30.23 [1.19]	12.700 [.500]	19 [3/4]
CC306	CC306-M65978	25 [1.0]	45.21 [1.78]	27.94 [1.10]	14.00 [.551]	22 [7/8]

NOTE: USE CC306-M65978 ON CC073M AND CCAM073M SHAFTS

UNLESS OTHERWISE SPECIFIED: (FABRICATION)

TOLERANCE ON FABRICATION DIMENSIONS:
- LESS THAN 1219 [48"] ± 3 [1/8"]
- 1219 [48"] TO 3048 [120"] ± 6 [1/4"]
- OVER 3048 [120"] ± 9,5 [3/8"]

UNLESS OTHERWISE SPECIFIED: (MACHINING)

TOLERANCE ON MACHINING DIMENSIONS:
- 0,X ± 1,524 [.060]
- 0,XX ± 0,762 [.030]
- 0,XXX ± 0,254 [.010]
- 0,XXXX ± 0,127 [.005]
- ANGULAR ± 1°

ALL CONCENTRIC CIRCLES: ◎ 0,25 [.010] T.I.R.

ALL PERPENDICULAR SURFACES: ⊥ 0,05 [.002/INCH]

BREAK OR DEBURR ALL SHARP EDGES

INTERNAL CORNERS 0,000 [.000]/0,815 [.032] R.

MACHINED SURFACES 3,2 [125]

SHOP	
AUSTR	
UK	
PROJ ENG	
DXF	
DIRECTORY	

© WARMAN INTERNATIONAL LTD. 1996. WARMAN INTERNATIONAL LTD. is the owner of the copyright subsisting in this drawing and these designs, specifications and instructions. They must not be used, reproduced or copied in whole or in part, in any form or by any means, nor may the information therein contained, which is confidential to WARMAN INTERNATIONAL LTD. be disclosed to any person, without the prior written consent of WARMAN INTERNATIONAL LTD.
The drawing has been delivered and received on the express conditions that it may be used only for the specific purpose for which it has been provided, may not be used in any way which may injure or cause loss directly or indirectly to WARMAN INTERNATIONAL LTD. or any related corporation and will be returned to WARMAN INTERNATIONAL LTD. immediately on completion of the task for which it has been provided, or on demand.

No.	DESCRIPTION	BY	DATE	CHK
5				
4	M12H1-65VN WAS U08H1-010VN	RT	JAN.16,1998	JB
3	REDESIGNED AND REDRAWN, ADDED CC306-M65978	RJK	MAR.12,1996	
2				
1				

REVISIONS

APP.	
CHECK	
DRN.	RJK
DATE	MAR.12,1996
SCALE	

SHAFT WRENCH
DETAIL
*306-*65978

WARMAN INTERNATIONAL INC.
OFFICE OF ORIGIN : MADISON
Warman CAE-CAD-CAM

A2– 111 –1–65978
SHEET 2 OF 2

REV. 4