PART NO	PART NAME	MAT	Q/TY	SPECIFICATION	REMARK
F054	PUNCH 4	STD-11	2	(80.0)*60.0*100.0	HRC58

OP60 PUNCH 4(CAM)
F054 STD-11, HRC58, 2EA SYM. ????????

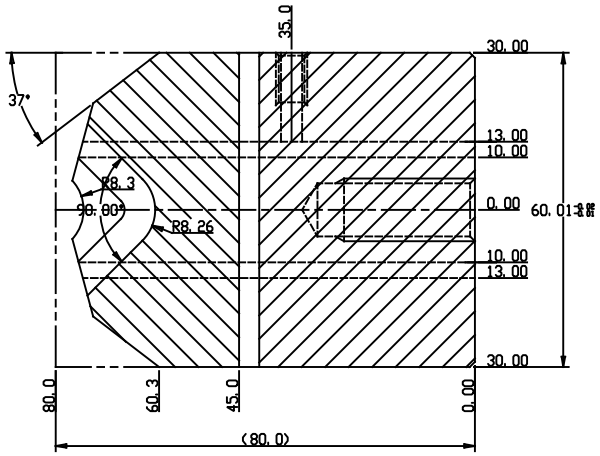

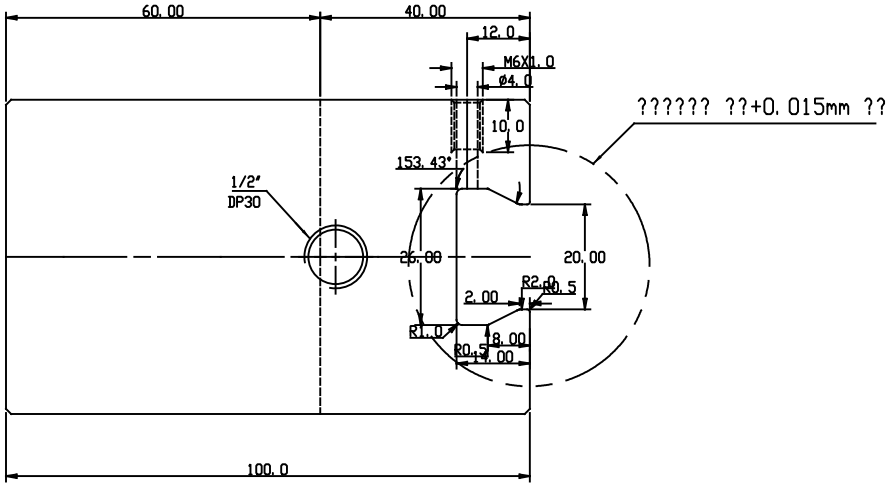

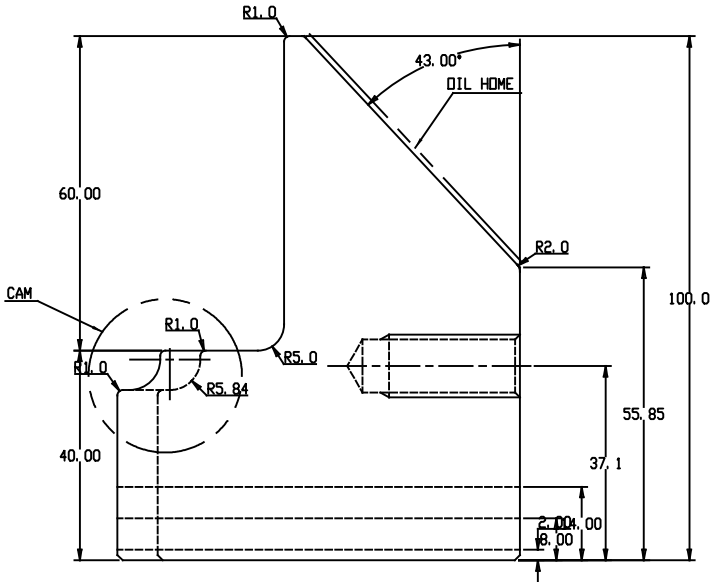

WORK NO					
	09P17700				
DECIMAL DIMENSION TOLLERANCE		GENERAL DIMENSION TOLLERANCE		DATE	SIGN	REVISION
REF DECIMAL	TOLLERANCE	RANGE	1GRADE	2GRADE	
0.X	0.1	~30	0.1	0.2	
0.XX	0.01	30-120	0.15	0.3	
0.XXX	0.001	120-315	0.2	0.5	
* GENERAL FITTING PARTS		315-1000	0.3	0.8	
1) HOLE : FROM 0 TO +		1000~2000	0.5	1.2	
2) SHAFT : FROM 0 TO -		* LOCATION DIMENSION : 1GRADE			

* FILE NAME:P				
DIM	DESIGN/D	CHECK/D	APPR/D	TITLE: 6/6 CAM-BENDING PARTS PLAN 1
SCA 1/1.0	--	--	--	COVER TOP
TOL GRADE	09.10.10	--	--	
Atech Solution	REF NO.	*	DRAW NO.	189D5272P001