NAME	DATE	TIME (HRS)

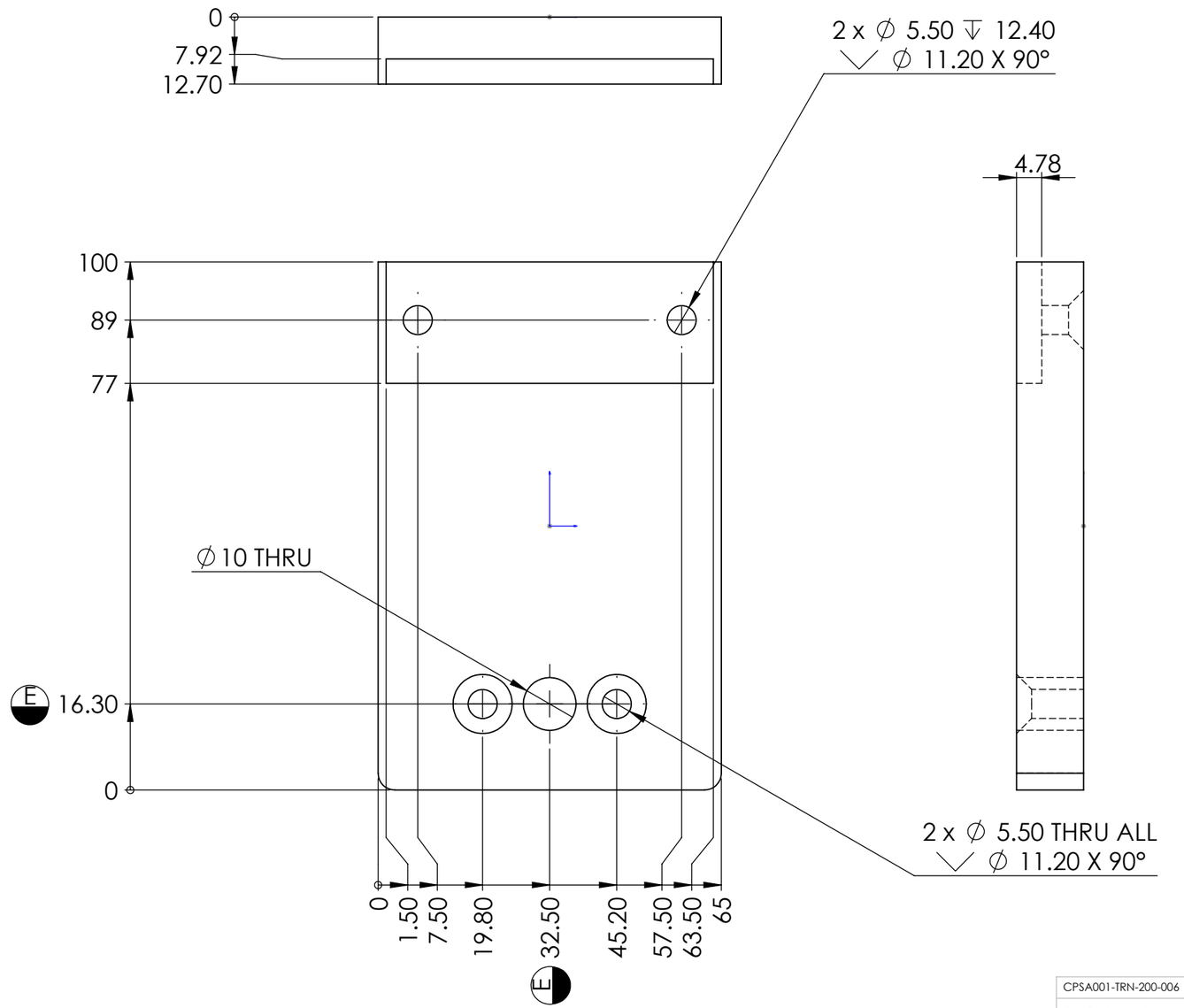

CPSA001-TRN-200-006

PAG. 1 de 1

E MEDIDA ESPECIAL

ALL TECHNICAL DATA DISCLOSED HERE IS PROPERTY OF **TAKATA** SEAT BELTS INC. AND SHALL NOT BE USED BY ANY OTHER MANUFACTURER, PROCUREMENT OR DISCLOSURE WITHOUT WRITTEN PERMISSION OF THE OWNER

NOTES:

Pieza libre de filos y rebabas.

TOTAL OF PIECES	5
ANG. PROF	

REV	DESCRIPTION	DATE	APPROVED

REVIEWS

AUTHORIZE | TALLER | QUALITY

UNLESS OTHERWISE SPECIFIED

TOLERANCES DIMENSIONS	ISO 2768-1 mK-E ASME Y14.5M-1994	
MM	INCHES	ANGLES
+.1 -.1	+.004 -.004	+1° -1°

MATERIAL: 6061AL

SURFACE TREATMENT

HARDNESS

TAKATA

APPROVALS		DATE
DESIGNER	GRMV	16/04/2019
REVIEW	JEC	16/04/2019

TAKATA MONTERREY TECHNICAL CENTER

MODEL NAME	CPSA001-TRN	SERIES No	M2019-072R
MACHINE NAME	Op 80 C Pillar / Screw Assy		
PART NUMBER	CPSA001-TRN-200-006		
SIZE B	PART NAME		REV. A
ESCALE: 1:1		DRAWING IN MILLIMETERS	

TKH-MTC-MF-FM-0016-004