NAME	DATE	TIME (HRS)

ITEM NO.	QTY.	DESCRIPTION	LENGTH
1	2	80/20 40-4040-LITE PROFILE	720
2	1	80/20 40-4040-LITE PROFILE	620
3	3	80/20 40-4040-LITE PROFILE	112
4	1	80/20 40-4040-LITE PROFILE	660
5	1	80/20 40-4040-LITE PROFILE	620
6	2	80/20 40-4040-LITE PROFILE	340
7	1	80/20 40-4040-LITE PROFILE	700

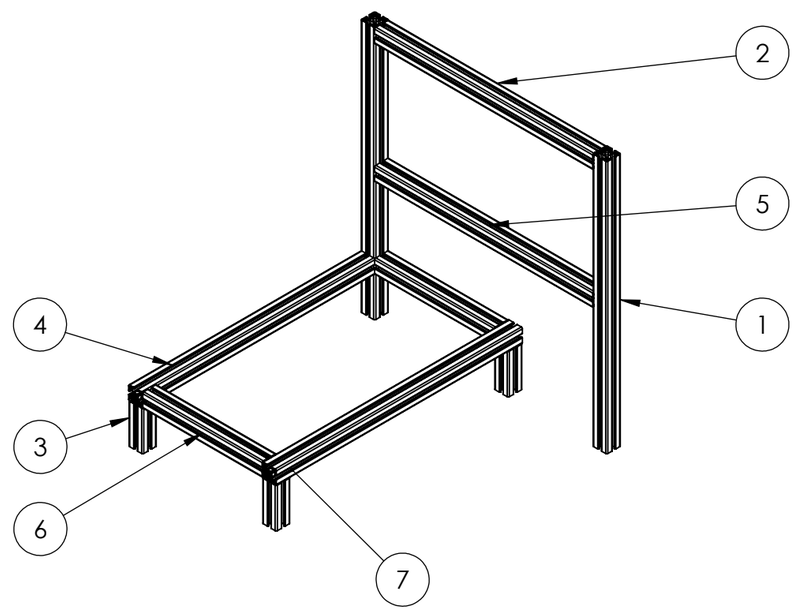

IWM002-TRN-101-001

PAG. 1 de 1

E MEDIDA ESPECIAL

ALL TECHNICAL DATA DISCLOSED HERE IN IS THE PROPERTY OF JOYSON SAFETY SYSTEMS AND SHALL NOT BE USED BY ANY OTHER MANUFACTURER, PROCUREMENT OR DISCLOSURE WITHOUT WRITTEN PERMISSION OF THE OWNMER.

AUTHORIZE	TALLER	QUALITY

NOTES:

Pieza libre de filos y rebabas.

TOTAL OF PIECES: 1 Pza.

ANG. PROF

REV	DESCRIPTION	DATE	APPROVED

REVIEWS

UNLESS OTHERWISE SPECIFIED

TOLERANCES DIMENSIONS: ISO 2768-1 mK-E ASME Y14.5M-1994

MM	INCHES	ANGLES
+.1 -.1	+.004 -.004	+1° -1°

MATERIAL: PTR ALU 40 x 40

SURFACE TREATMENT: N.A.

HARDNESS: N.A.

JOYSON SAFETY SYSTEMS

APPROVALS		DATE
DESIGNER	JLOV	4/27/2022
REVIEW	RVM	4/27/2022

JOYSON TECHNICAL CENTER

MODEL NAME	IWM002-TRN	SERIES No	M2022-010
MACHINE NAME	INFLATOR WEIGHT #1		
PART NUMBER	IWM002-TRN-101-001		
SIZE B	PART NAME IWM002-TRN-101-001		REV. A
ESCALE: 1:12		DRAWING IN MILLIMETERS	

JSSAM-JTC-MF-FM-0002-001