ITEM	QTY.	MAT'L.	STOCK SIZE
1	1	LOW CARB. HPS	[redacted]
2	3	STEEL ANGLE	[redacted]

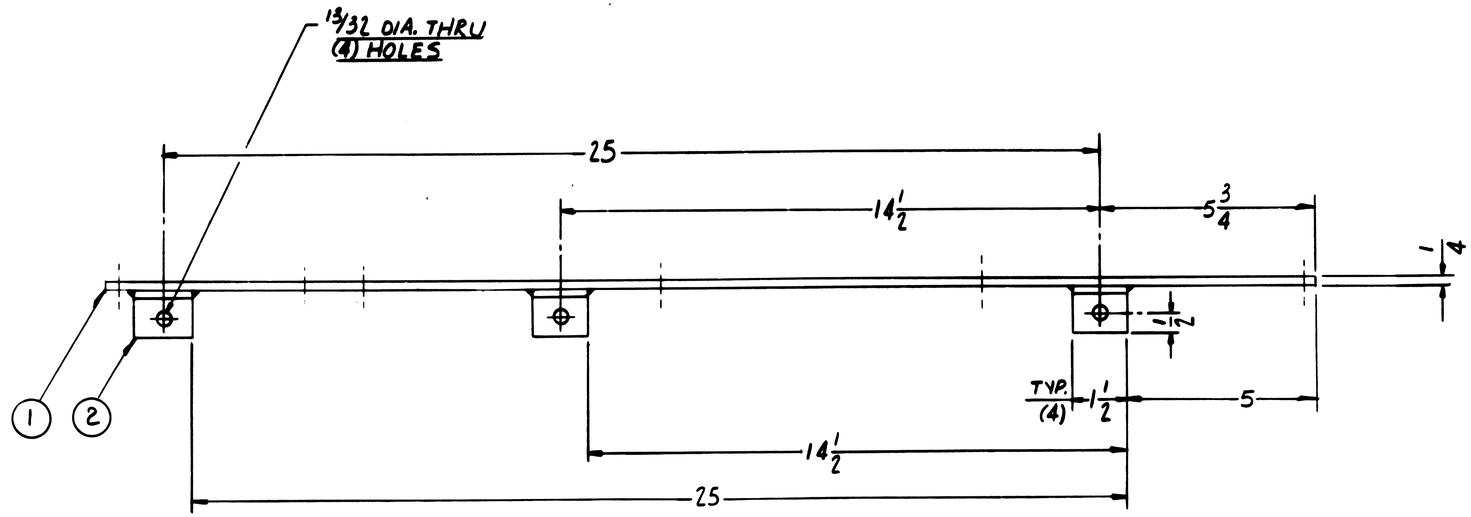

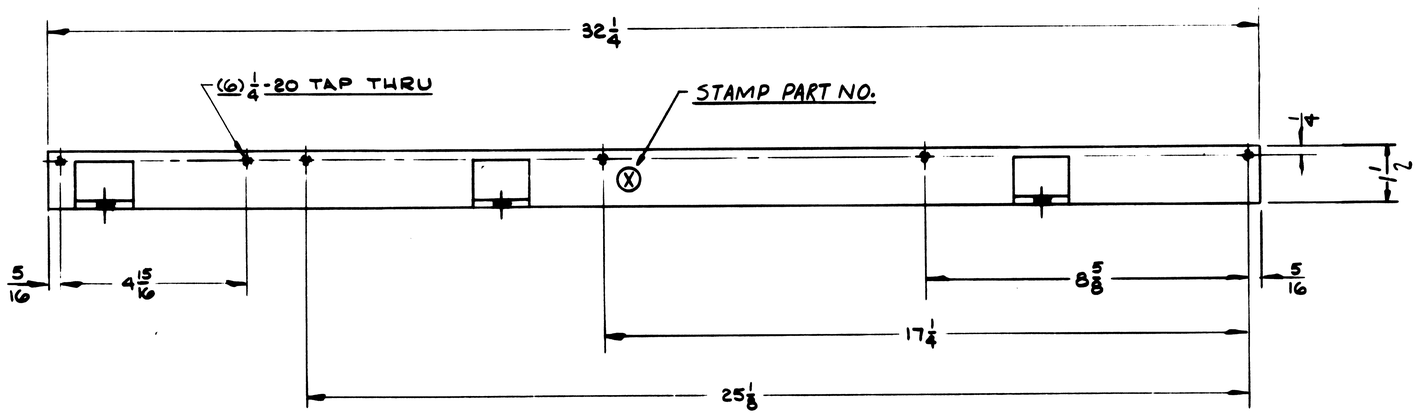

PAINT ONE COAT
RUST INHIBITING
GRAY PRIMER

USED ON ASSEMBLY NO. 015-02484

CHANGES

"INFORMATION CONTAINED HEREIN CONSTITUTES PROPRIETARY CONFIDENTIAL INFORMATION OF OWENS-ILLINOIS, AND IS TO BE ACCEPTED ONLY SUBJECT TO THAT UNDERSTANDING. IT IS TO BE KEPT CONFIDENTIAL AND NOT COPIED, USED, OR CONVEYED TO OTHERS WITHOUT OWENS-ILLINOIS' WRITTEN AUTHORIZATION."

UNLESS SPECIFIED:
FINISHED SURFACE ROUGHNESS ✓
FINISHED DIMENSIONS – FRACTIONAL ± .015
DECIMAL ± .005
BREAK SHARP EDGES MARK PART NUMBER AT (X)

NAME LUB. INJECTOR BRACKET
MACH. LEFT END
DRAWN CJW | CHECKED | DATE 2-11-92 | 1/2 SCALE
MATERIAL WELDMENT, SEE LIST

OWENS-ILLINOIS
DRAWING NUMBER
015-43-576
SHEET ___

AUTORIZADO
FECHA DE IMPRESIÓN: 02/03/2022
ADN - ADMINISTRACIÓN DE DIBUJOS NETWORK
Impresión generada por: Jesus Angel Ochoa Saldaña