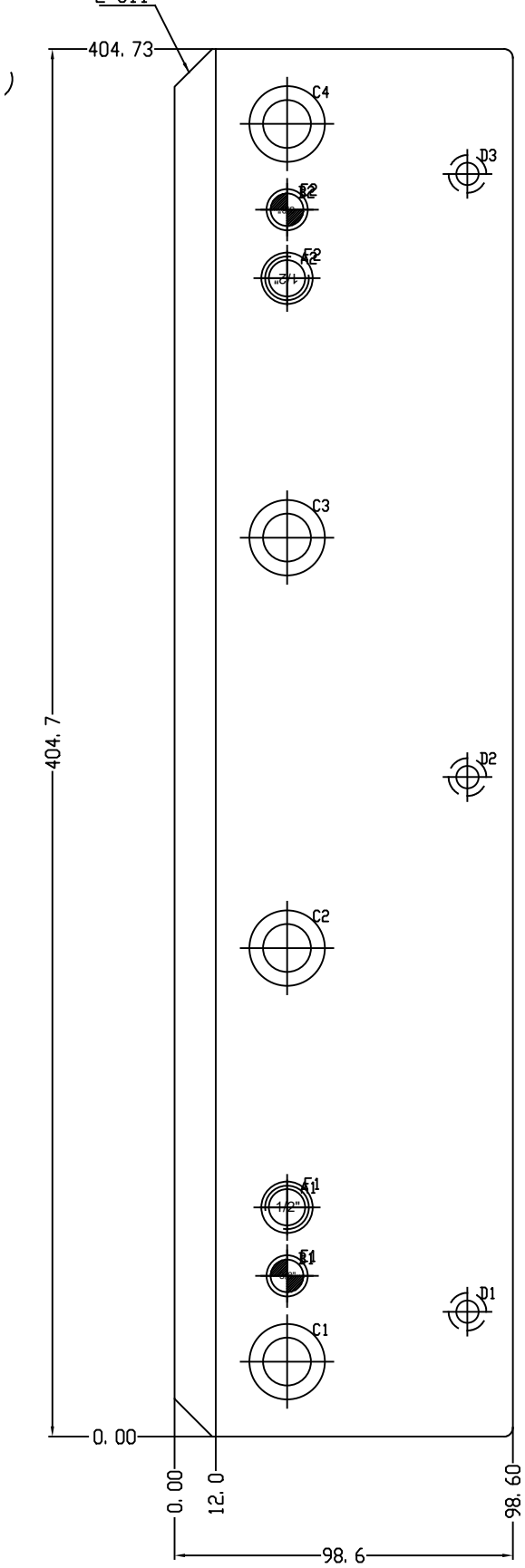


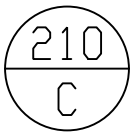

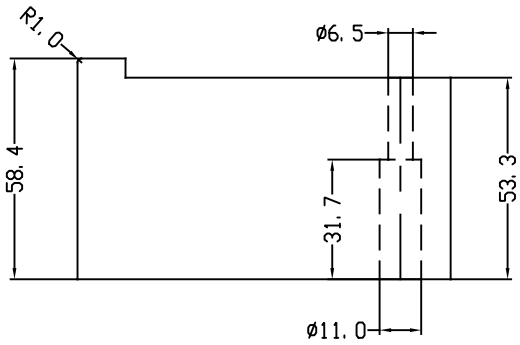
| MODE | X-POS | Y-POS |
|---|---|---|
| A: 1/2" TAP | | |
| A 1 | 32.8 | 66.9 |
| A 2 | 32.8 | 337.9 |
| B: ø9.520 (3/8"REM) Through | | |
| B 1 | 32.78 | 46.87 |
| B 2 | 32.78 | 357.87 |
| C: ø14.0 (Drill) C/B ø22 DP38.4 | | |
| C 1 | 32.8 | 21.9 |
| C 2 | 32.8 | 142.5 |
| C 3 | 32.8 | 262.2 |
| C 4 | 32.8 | 382.9 |
| D: ø6.5 (Drill) C/B ø11 DP31.7 (BACK) | | |
| D 1 | 85.4 | 36.4 |
| D 2 | 85.4 | 192.4 |
| D 3 | 85.4 | 368.3 |
| E: ø12.0 (C/B) DP28.4 | | |
| E 1 | 32.8 | 46.9 |
| E 2 | 32.8 | 357.9 |
| F: ø15.0 (C/B) DP48.4 | | |
| F 1 | 32.8 | 66.9 |
| F 2 | 32.8 | 337.9 |