General Dimension Tolerance			
0 ~ 4	± 0.1	16 ~ 63	± 0.3
4 ~ 16	± 0.2	63 ~	± 0.5

REVISIONS			
REV.	DESCRIPTION	DATE	APPROVED
1	REDUCE HEINGHT 2mm	3/18/2022	DS

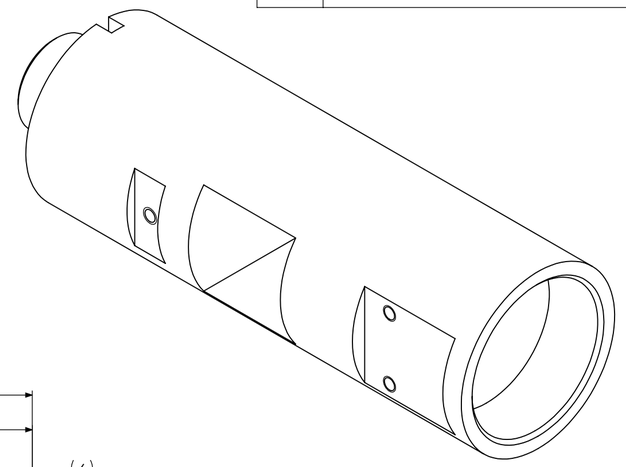

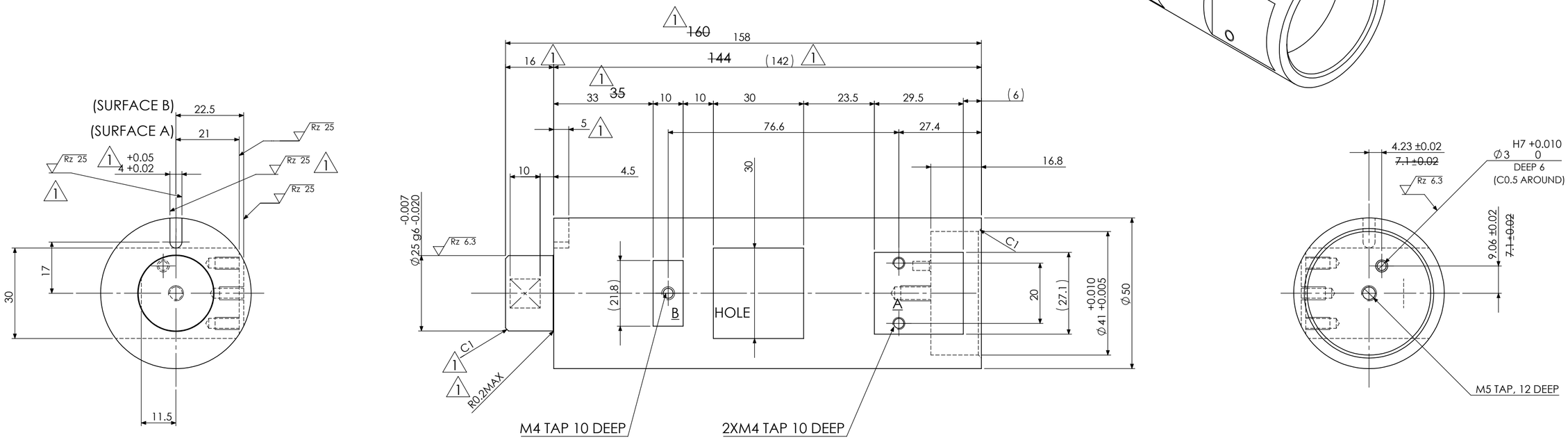

NOTE: ALL EDGES MUST BE C0.5 UNLESS OTHERWISE SPECIFIED

Rz 100 (Rz 25 , Rz 6.3)

SURFACE TREATMENT	HEAT TREATMENT	WEIGHT

MATERIAL:	RESEMBLANCE PART No.	IMPO CODE	I/O CODE
SUS303 (AISI 303)			

PART NAME: HOLDER

DENSO MEXICO	DWG NO. M-4018231-011	A2	ASP CODE	SHEET 1 OF 1
APPROVED / CHECKED / CHECKED / DESIGNED / DRAWN: FRANCISCO CARRIZALES	QTY.:1	No.:1		SCALE:1:1

DENSO

CONFIDENTIAL