NAME	DATE	TIME (HRS)

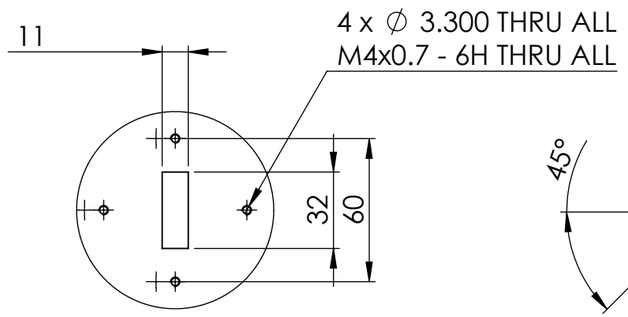

DETAIL A
SCALE 2 : 5

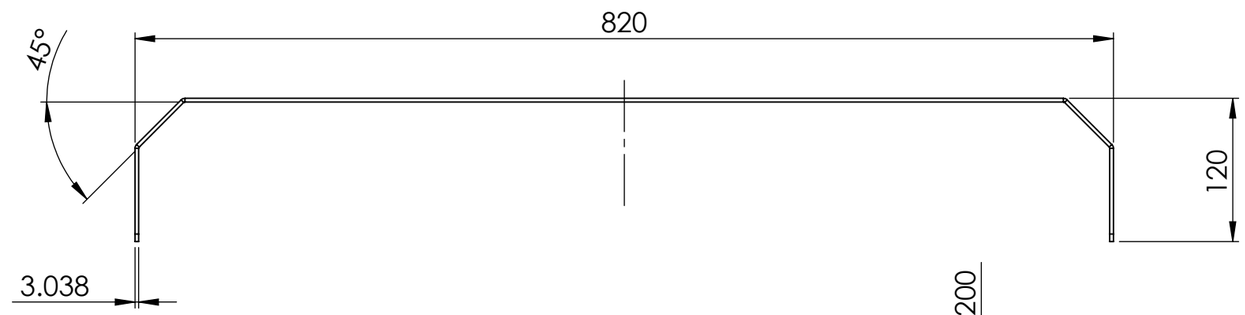

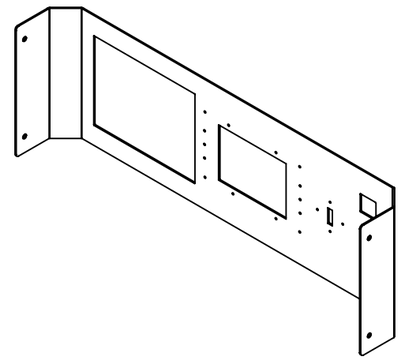

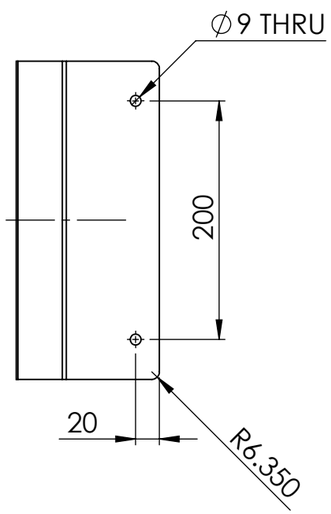

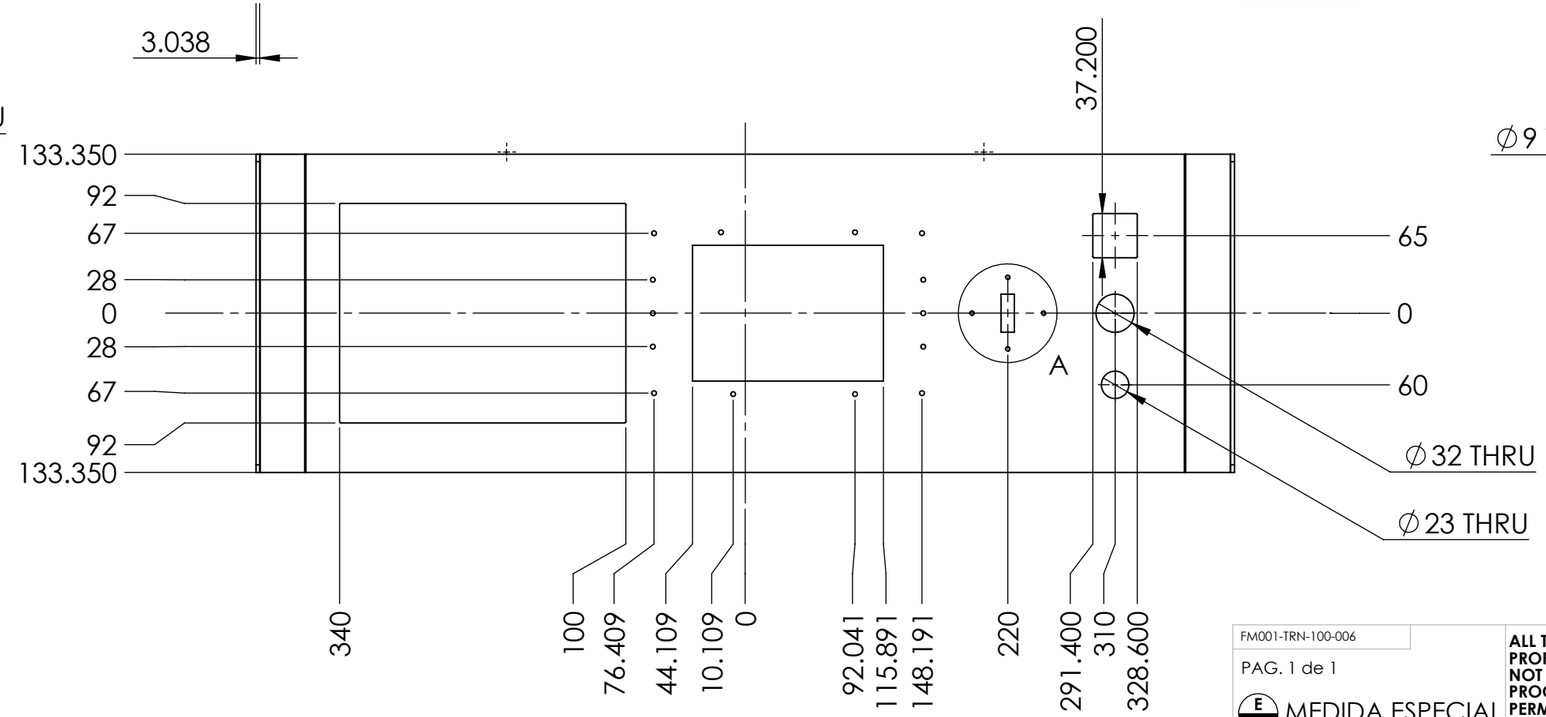

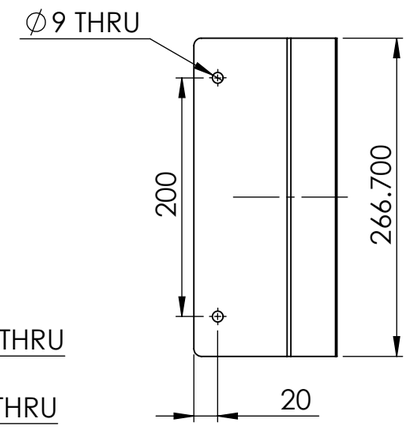

FM001-TRN-100-006

PAG. 1 de 1

E MEDIDA ESPECIAL

ALL TECHNICAL DATA DISCLOSED HERE IN IS THE PROPERTY OF JOYSON SAFETY SYSTEMS AND SHALL NOT BE USED BY ANY OTHER MANUFACTURER, PROCUREMENT OR DISCLOSURE WITHOUT WRITTEN PERMISSION OF THE OWNMER.

AUTHORIZE	TALLER	QUALITY

NOTES:
Pieza libre de filos y rebabas.

REV	DESCRIPTION	DATE	APPROVED

REVIEWS

TOTAL OF PIECES	1 Pza.
ANG. PROF	

UNLESS OTHERWISE SPECIFIED

TOLERANCES DIMENSIONS	ISO 2768-1 mK-E ASME Y14.5M-1994	
MM	INCHES	ANGLES
+.1 -.1	+.004 -.004	+1° -1°

MATERIAL:	SS304
SURFACE TREATMENT	Pulido
HARDNESS	N.A.

JOYSON SAFETY SYSTEMS

APPROVALS		DATE
DESIGNER	ABG	12/18/2020
REVIEW	JEC	12/18/2020

JOYSON TECHNICAL CENTER

MODEL NAME	FM001-TRN	SERIES No	M2020-074
MACHINE NAME	BMW FOLDING MACHINE		
PART NUMBER	FM001-TRN-100-006		
SIZE **B**	PART NAME Info Panel		REV. **A**
ESCALE: 1:5		DRAWING IN MILLIMETERS	

TKH-MTC-MF-FM-0016-005