REVISIONS					
ECN NO.	REV.	BY	APV.	DATE	DESCRIPTION OF CHANGE(S)
3690	J	MD		10-8-04	PRODUCTION RELEASE; REPLACES DWG 3106911.005(#)
4917	K	MD		3-15-06	NOTE 4 DELETED COLORS "C", "E", & "G"; ADDED PANTONE SPECS
6218	L	JLM		5-7-07	L1- REVS NOTES 2 & 4; L2- NAME WAS: BRACKET, CUSTOM
10598	M	JLR		4-6-10	P/N .013 WAS RAW & NOT FABRICATED
22929	N	TGD		5-7-19	N1- UPDATED 3D DATA & CREATED 2D DRAWING IN SOLIDWORKS; N2- UPDATED DRAWING FORMAT; N3- ADDED VOLUME & SURFACE AREA; N4- CROSS SECTION WAS "NOMINAL AREA = .983" & PERIMETER WAS "NOMINAL PERIMETER = 11.82"
23064	P	HD		6-26-19	ADDED NOTE 5

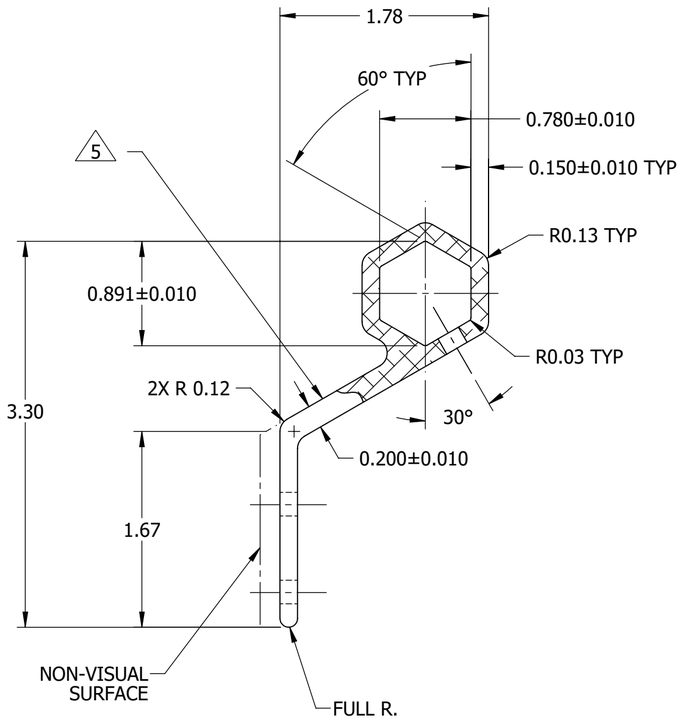

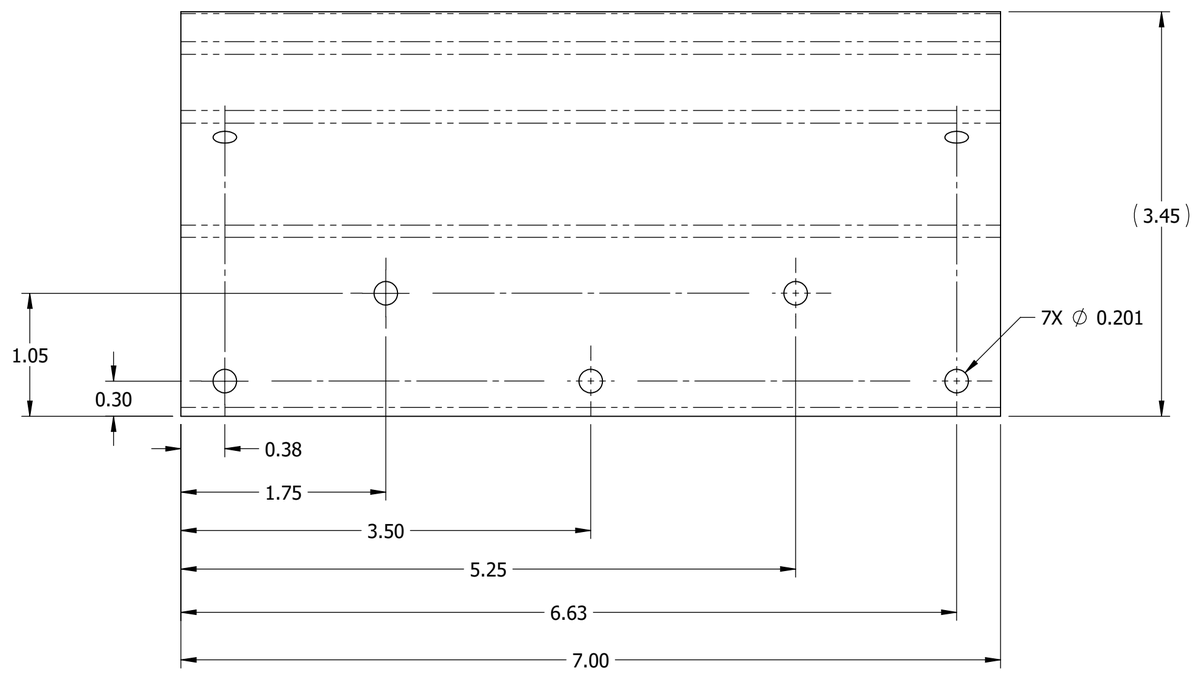

PART NO.	DESCRIPTION
3106911.005(#)	PAINTED & FABRICATED AS SHOWN
3106911.013	RAW AND FABRICATED AS SHOWN

M

K L1

NOTES:

1. DIMENSIONS APPLY BEFORE FINISH.
2. PAINT PER ENGINEERING STANDARDS 10-4 & PAINT COLOR SPEC 3310896.000.
3. NON-VISUAL SURFACES = NOTED, INNER WALLS & HOLES.
4. REPLACE (#) IN PART NUMBER WITH HARDWARE COLOR CODE, SEE DRAWING 3310896.003

5 I.D. MARK TO BE IN THIS AREA PER DOMETIC DRAWING NO.3103777.003

N4 N3

DIMENSIONING AND TOLERANCING IN ACCORDANCE WITH ASME Y14.5-2009

UNLESS OTHERWISE SPECIFIED, ALL DIMENSIONS IN INCHES [MILLIMETERS], ANGLES IN DEGREES

ANY CHANGES TO MATERIAL, TOOLING, OR MANUFACTURING PROCESS MUST BE REAPPROVED PER CURRENT DOMETIC QUALITY PROCESS

PARAMETERS FOR REFERENCE

VOLUME (in^3): 6.84
SURFACE AREA (in^2): 84.63
CROSS SECTION (in^2): .98
PERIMETER (in): 11.78

C PAPER SIZE

DO NOT SCALE DRAWING

REFER TO DOMETIC QUALITY DESIGNATION STANDARD 12-50

THIRD ANGLE PROJECTION

DOMETIC

509 S. Poplar St. LaGrange IN 46761 USA

NAME: BRACKET, WALL, 45 DEGREE

DIMENSIONAL TOLERANCES UNLESS NOTED OTHERWISE:
.X: ±.1[2.5]
.XX: ±.03[.76]
.XXX: ±.005[.125]
ANGULAR: ±1°

MATERIAL: 6063-T6 ALUMINUM

DRAWN BY:	DATE DRAWN:	SCALE:
MD	10-8-04	1:1

DRAWING NUMBER: 3106911.XXX#

SHEET: 1 OF 1

COPYRIGHT 2019, DOMETIC CORPORATION. NOTICE: THIS DRAWING, AND THE INFORMATION CONTAINED HEREON, ARE CONFIDENTIAL AND PROPRIETARY TO DOMETIC CORPORATION. THIS DRAWING IS PROTECTED BY US AND INTERNATIONAL COPYRIGHT LAWS. NEITHER THE DRAWING NOR THE INFORMATION DISCLOSED ON IT MAY BE TRANSFERRED, USED, OR COPIED EXCEPT FOR DOMETIC'S BENEFIT AND BY DOMETIC'S WRITTEN DIRECTION OR CONSENT. IF YOU ARE IN POSSESSION OF THIS DRAWING WITHOUT DOMETIC'S WRITTEN INSTRUCTION OR CONSENT, PLEASE RETURN IT IMMEDIATELY TO DOMETIC. USE OF THIS DRAWING UNDER SERVICE OR SUPPLY OBLIGATION TO DOMETIC IS STRICTLY LIMITED TO THE SPECIFICATIONS APPEARING HEREON UNLESS OTHERWISE EXPRESSLY DIRECTED IN WRITING BY DOMETIC.