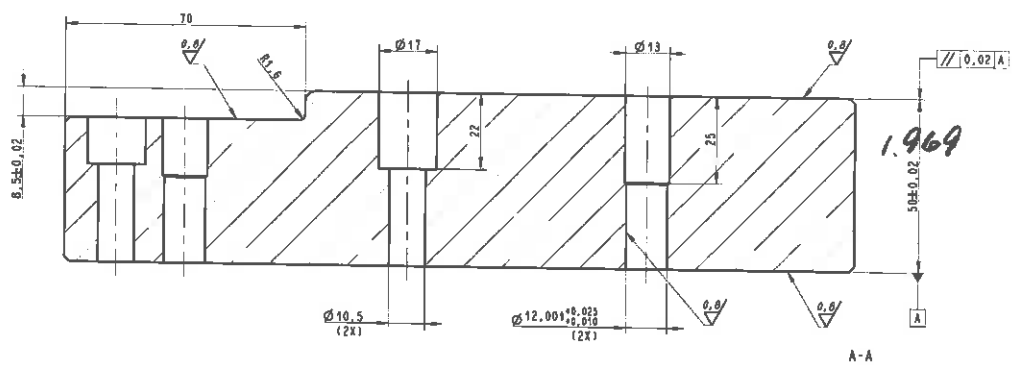

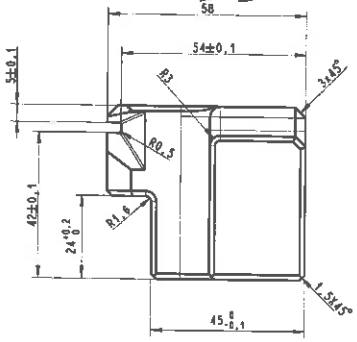

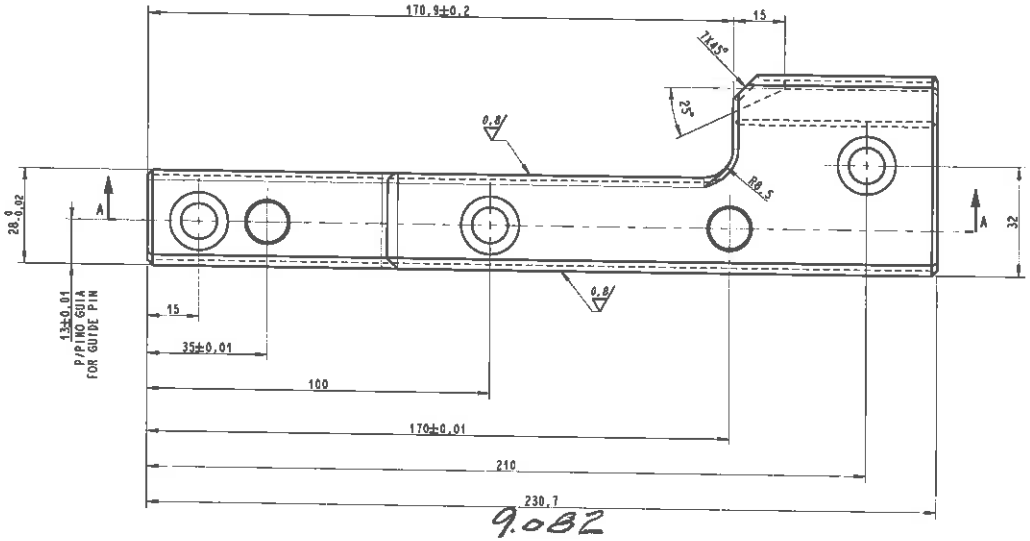

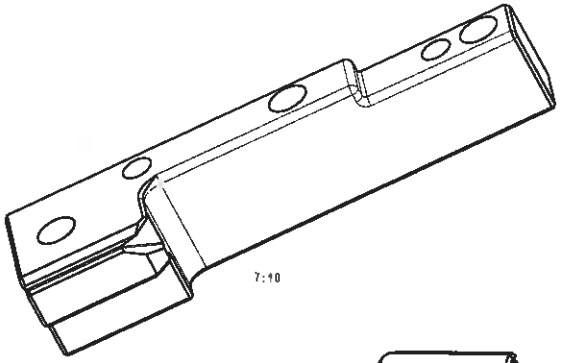

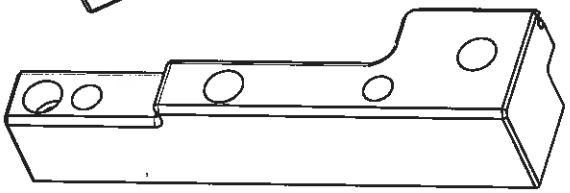

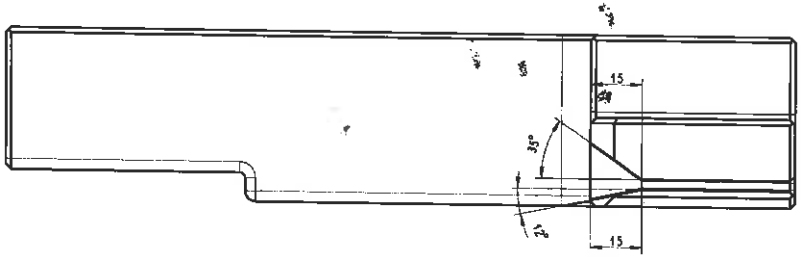

MATERIAL - FABRICANTE / MATERIAL - SUPPLIER: SAE D2 DIN 1.2436	[redacted]	ACABADO / SURFACE FINISHING: 3.2 0.8	
TRATAMIENTO / TREATMENT: TEMP. E REV. TO HARDEN	DUREZA / HARDNESS: 58	FORM. / FORMAT: A2	UNID. / UNIT: mm
[redacted]	ENCOSTO BACKREST	ESCALA / SCALE: 1:1	HOJA / SHEET: 1/1
		PLANTA / PLANT: MEXICO	EQUIPAMIENTO / EQUIPMENT
		NUMERO DESENHO / DRAW NUMBER: [redacted]	

REV.	REVISAD / REVISED	ESCR.	Data / DATE