| NAME | DATE | TIME (HRS) |
|---|---|---|
| | | |
| | | |
| | | |
| | | |

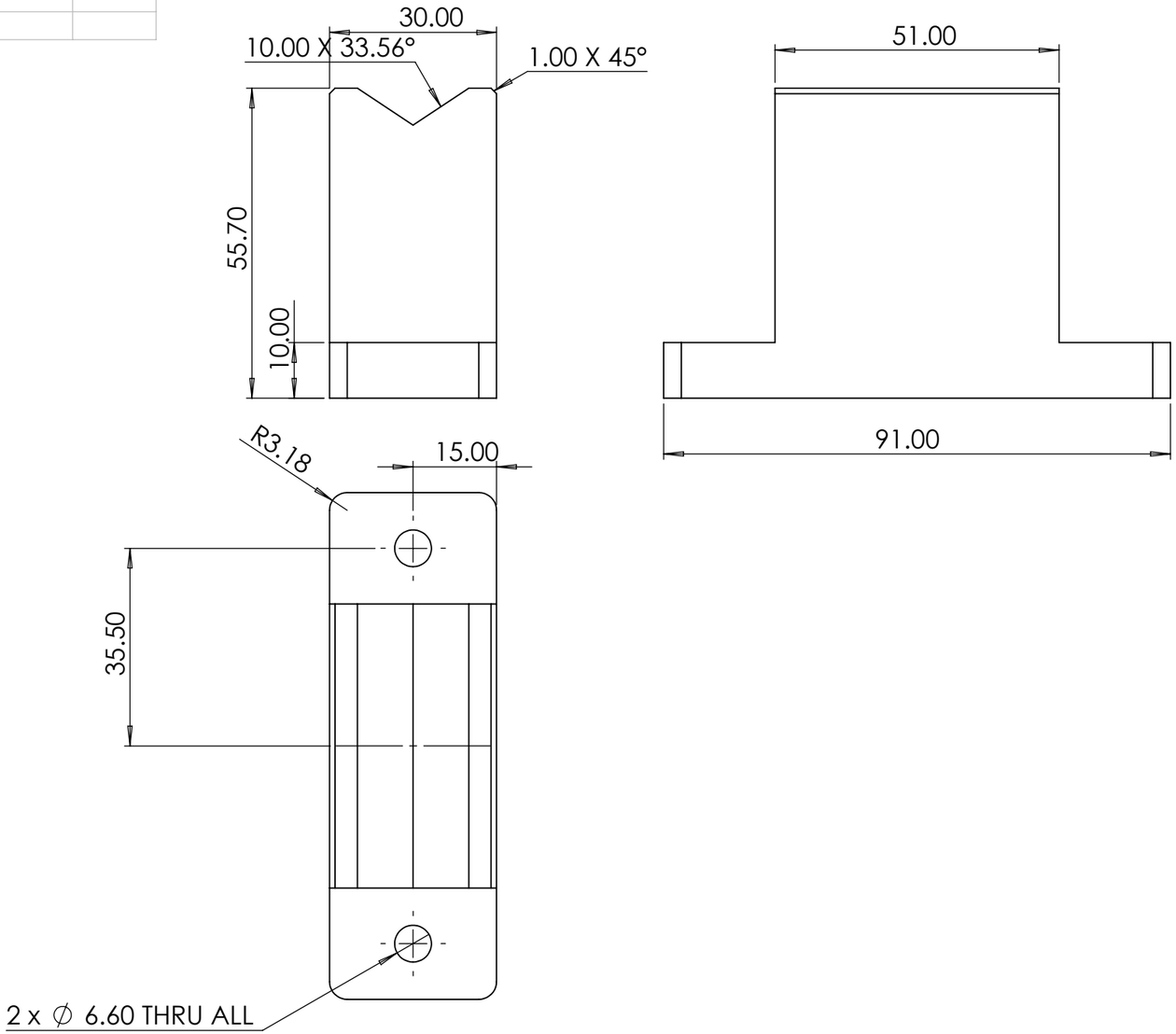


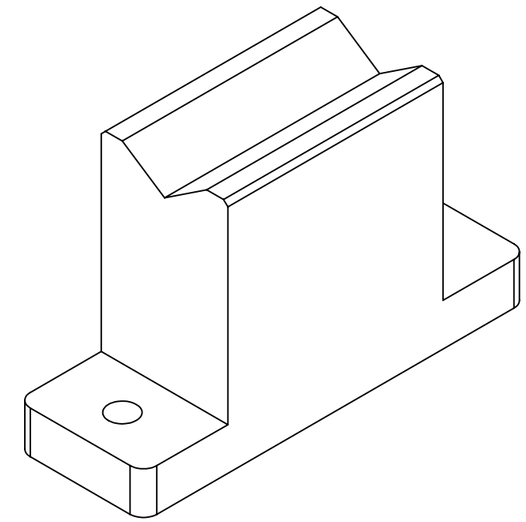

CM002-TRN-400-006

PAG. 1 de 1

E MEDIDA ESPECIAL

**ALL TECHNICAL DATA DISCLOSED HERE IN IS THE PROPERTY OF JOYSON SAFETY SYSTEMS AND SHALL NOT BE USED BY ANY OTHER MANUFACTURER, PROCUREMENT OR DISCLOSURE WITHOUT WRITTEN PERMISSION OF THE OWNMER.**

JOYSON
EQUIPO AUTOMOTRIZ AMERICANA S.A. DE C.V.
BOLSAS DE AIRE
NOMBRE: RM
FIRMA:

AUTHORIZE | TALLER | QUALITY

**NOTES:**
Pieza libre de filos y rebabas.

TOTAL OF PIECES: 1 Pza.
ANG. PROF

| REV | DESCRIPTION | DATE | APPROVED |
|---|---|---|---|
| | | | |
| | | | |
| | | | |

REVIEWS

UNLESS OTHERWISE SPECIFIED

| TOLERANCES DIMENSIONS | MM | INCHES | ANGLES |
|---|---|---|---|
| ISO 2768-1 mK-E ASME Y14.5M-1994 | +.1 -.1 | +.004 -.004 | +1° -1° |

MATERIAL: SS304
SURFACE TREATMENT: PULIDO
HARDNESS: N.A

JOYSON SAFETY SYSTEMS

| APPROVALS | | DATE |
|---|---|---|
| DESIGNER | JMM | 6/2/2022 |
| REVIEW | JEC | 6/2/2022 |

**JOYSON TECHNICAL CENTER**

| | | | |
|---|---|---|---|
| MODEL NAME | CM002-TRN | SERIES No | M2022-17 |
| MACHINE NAME | Crimping Machine | | |
| PART NUMBER | CM002-TRN-400-006 | | |
| SIZE **B** | PART NAME | | REV. |
| ESCALE: 1:1 | DRAWING IN MILLIMETERS | | |

JSSAM-JTC-MF-FM-0002-001