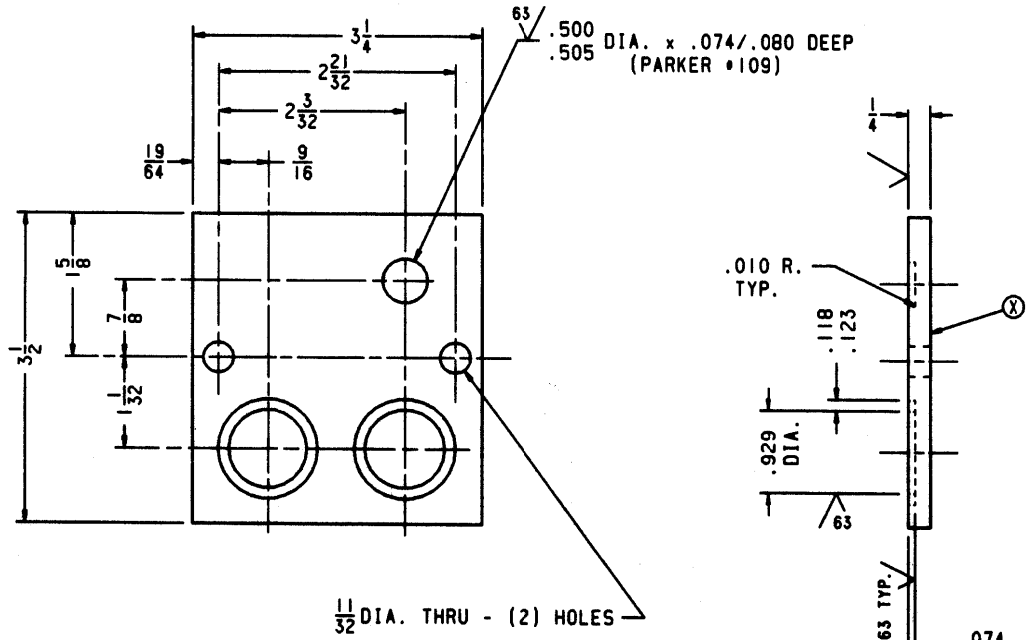

USED ON ASSEMBLY NO. OIS-03095

M

"INFORMATION CONTAINED HEREIN CONSTITUTES PROPRIETARY CONFIDENTIAL INFORMATION OF OWENS-ILLINOIS, AND IS ACCEPTED ONLY SUBJECT TO THAT UNDERSTANDING. IT IS TO BE KEPT CONFIDENTIAL AND NOT COPIED, USED, OR CONVEYED TO OTHERS WITHOUT OWENS-ILLINOIS' WRITTEN AUTHORIZATION."

CHANGES

UNLESS SPECIFIED:
FINISHED SURFACE ROUGHNESS 125
FINISHED DIMENSIONS-FRACTIONAL ±.015
DECIMAL ±.005
BREAK SHARP EDGES
MARK PART NUMBER AT X

NAME: COVER PLATE ROSS DUAL MANIFOLD VALVE			
DRAWN PA/DCM	CHECKED	DATE 2-3-94	SCALE FULL
MATERIAL: 1018 CRS			

OWENS-BROCKWAY
GLASS CONTAINERS, a unit of Owens-Illinois

DRAWING NUMBER
OIS-103-1609

SHEET ___

Impresión generada por: Jesus Angel Garcia Saldaña
ADN - ADMINISTRACIÓN DE DIBUJOS NETWORK
AUTORIZADO
FECHA DE IMPRESIÓN: 19/01/2022