General Dimension Tolerance			
0 ~ 4	± 0.1	16 ~ 63	± 0.3
4 ~ 16	± 0.2	63 ~	± 0.5

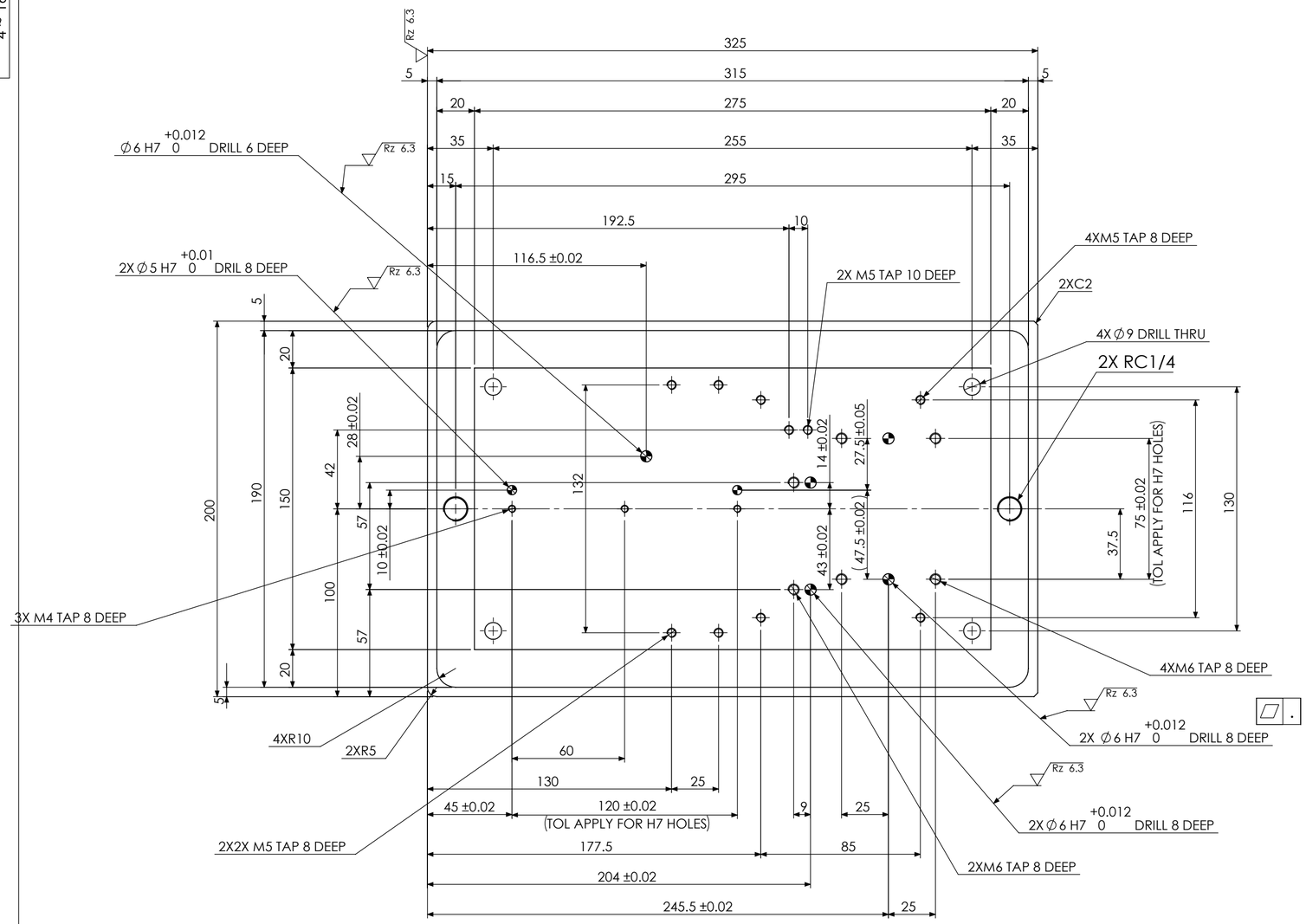

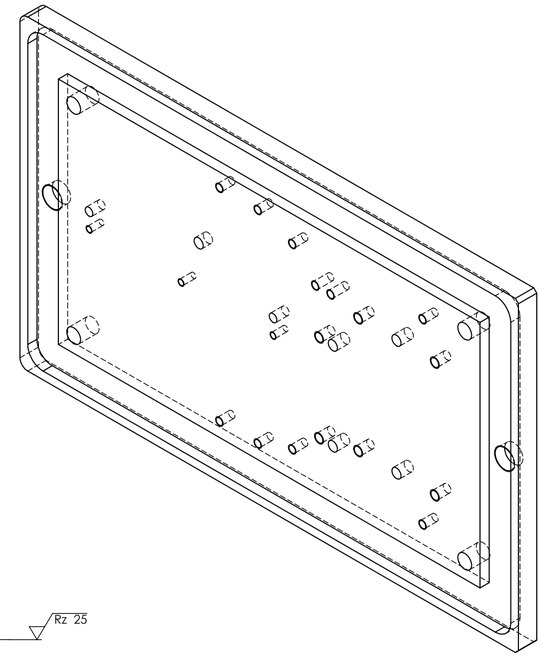

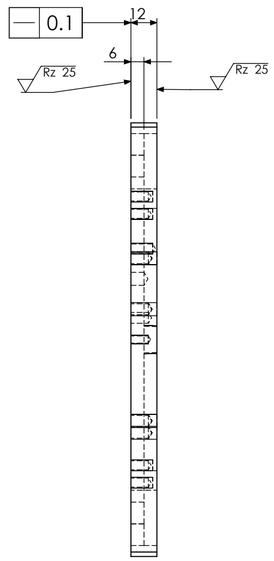

Rz 100 (Rz 25 Rz 6.3)

NOTE: DIMENSION PREMISE IS AFTER PLATING

NOTE: ALL EDGES MUST BE C0.3 UNLESS OTHERWISE SPECIFIED

SURFACE TREATMENT	HEAT TREATMENT	WEIGTH
ELp-Fe/Ni-P5		

MATERIAL:	RESEMBLANCE PART No.	IMPO CODE	I/O CODE
S45C (AISI 1045)			

PART NAME: PLATE

DENSO MEXICO

APPROVED	CHECKED	CHECKED	DESIGNED	DRAWN
				RT

DWG NO. M-4016481-011 | A2 | ASP CODE | SHEET 1 OF 1

QTY.: 1 | No.: 1 | SCALE:1:2

CONFIDENTIAL