| NAME | DATE | TIME (HRS) |
|---|---|---|
| | | |
| | | |
| | | |
| | | |

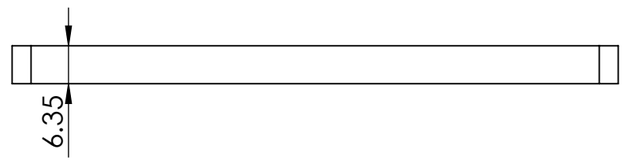


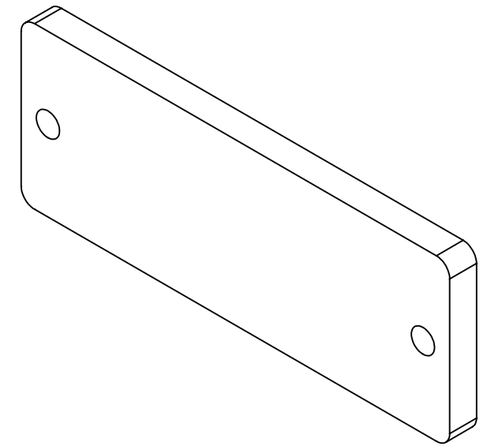

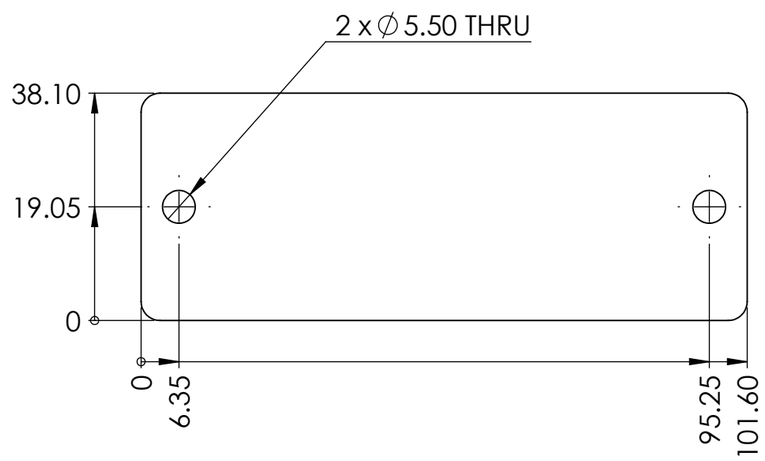


IC002-TRN-401-002

PAG. 1 de 1

E MEDIDA ESPECIAL

**ALL TECHNICAL DATA DISCLOSED HERE IN IS THE PROPERTY OF JOYSON SAFETY SYSTEMS AND SHALL NOT BE USED BY ANY OTHER MANUFACTURER, PROCUREMENT OR DISCLOSURE WITHOUT WRITTEN PERMISSION OF THE OWNMER.**

| AUTHORIZE | TALLER | QUALITY |
|---|---|---|

**NOTES:**
Pieza libre de filos y rebabas.

| REV | DESCRIPTION | DATE | APPROVED |
|---|---|---|---|
| | | | |
| | | | |
| | | | |

REVIEWS

| | |
|---|---|
| TOTAL OF PIECES | 1 Pza. |
| ANG. PROF | |

UNLESS OTHERWISE SPECIFIED

| TOLERANCES DIMENSIONS | ISO 2768-1 mK-E ASME Y14.5M-1994 | |
|---|---|---|
| MM | INCHES | ANGLES |
| +.1 -.1 | +.004 -.004 | +1° -1° |

| | |
|---|---|
| MATERIAL: | 6061 Aluminium |
| SURFACE TREATMENT | Pulido |
| HARDNESS | N.A. |

JOYSON SAFETY SYSTEMS

| APPROVALS | | DATE |
|---|---|---|
| DESIGNER | JLOV | 3/11/2021 |
| REVIEW | RVM | 3/11/2021 |

**JOYSON TECHNICAL CENTER**

| | | | |
|---|---|---|---|
| MODEL NAME | IC002-TRN | SERIES No | M2021-004 |
| MACHINE NAME | Inspectio Cell AFI | | |
| PART NUMBER | IC002-TRN-401-002 | | |
| SIZE **B** | PART NAME Identification Plate | | REV. **A** |
| ESCALE: 1:1 | | DRAWING IN MILLIMETERS | |