NAME	DATE	TIME (HRS)

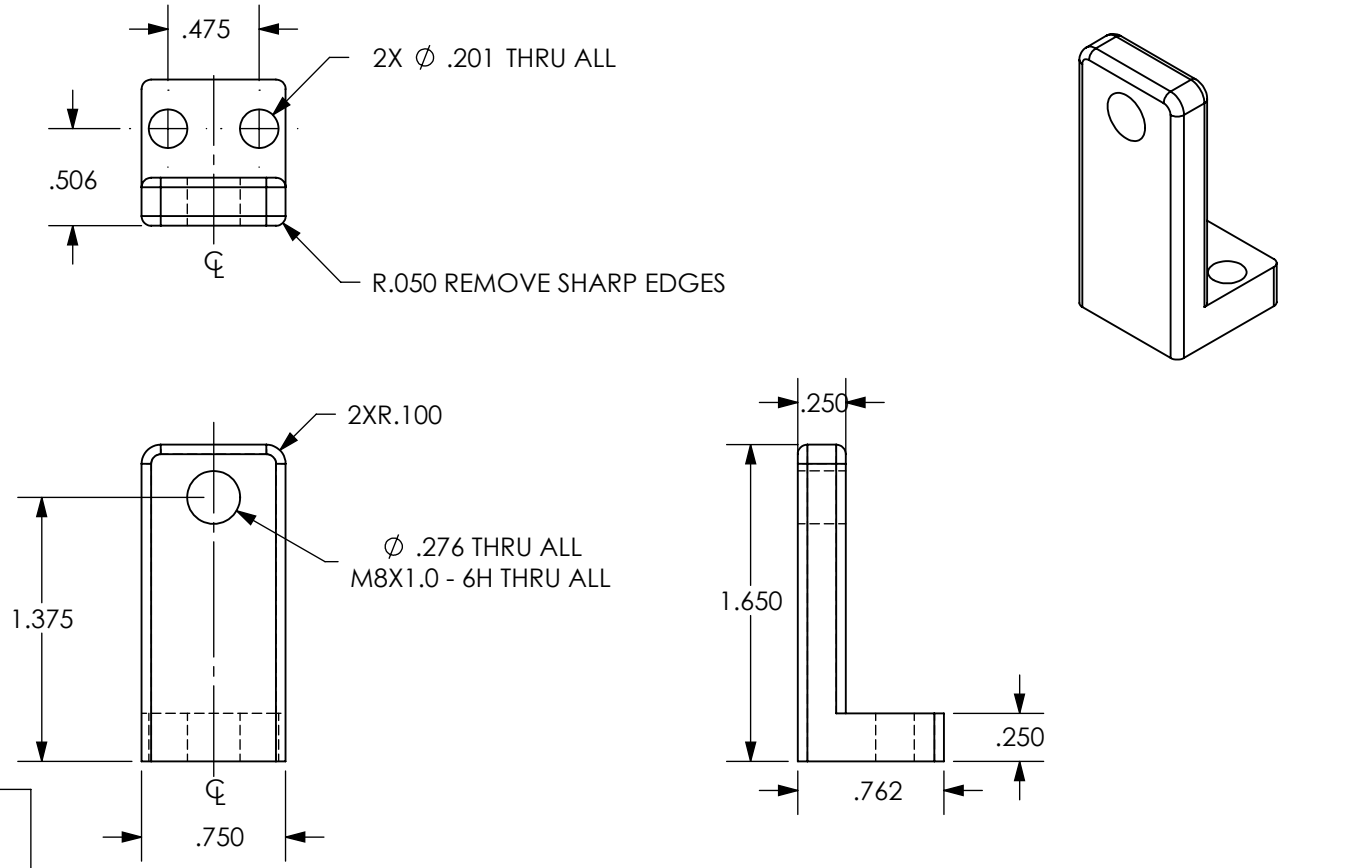

QUALITY

AUTHORIZE

TALLER

NOTES:
Pieza libre de filos y rebabas.

TOTAL OF PIECES	1 Pzas.
ANG. PRO	

REV	DESCRIPTION	DATE	APPROVED

REVIEWS

UNLESS OTHERWISE SPECIFIED

TOLERANCES DIMENSIONS ISO 2768-1 mK-E ASME Y14.5M-1994

MM	INCHES	ANGLES
+.1 -.1	+.004 -.004	+1°-1°

MATERIAL: ALUMINIO 6061

SURFACE TREATMENT: POLISHED

HARDNESS: N.A.

GT001-AC-025 PAG. 1 de 1

E MEDIDA ESPECIAL

JOYSON SAFETY SYSTEMS

APPROVALS	DATE
DESIGNER MCRH	24/JUN/2021
REVIEW JATA	24/JUN/2021

ALL TECHNICAL DATA DISCLOSED HERE IN IS THE PROPERTY OF JOYSON SAFETY SYSTEMS AND SHALL NOT BE USED BY ANY OTHER MANUFACTURER, PROCUREMENT OR DISCLOSURE WITHOUT WRITTEN PERMISSION OF THE OWNMER.

JOYSON TECHNICAL CENTER

MODEL NAME: GT001-AC SERIES No: M2021-089

MACHINE NAME: G-TESTER NUM.1

PART NUMBER: GT001-AC-025

SIZE **A** PART NAME PART 025 REV. **A**

ESCALE 1:1 **DRAWING IN** INCHES

JSSAM-JTC-MF-FM-0002-001