AUTORIZADO
FECHA DE IMPRESIÓN: 30/06/2022
ADN - ADMINISTRACIÓN DE DIBUJOS NETWORK

Impresión generada por: Jesus Angel Garcia Saldaña

TOLEDO BLUE PRINT & PAPER CO. 500 3-71

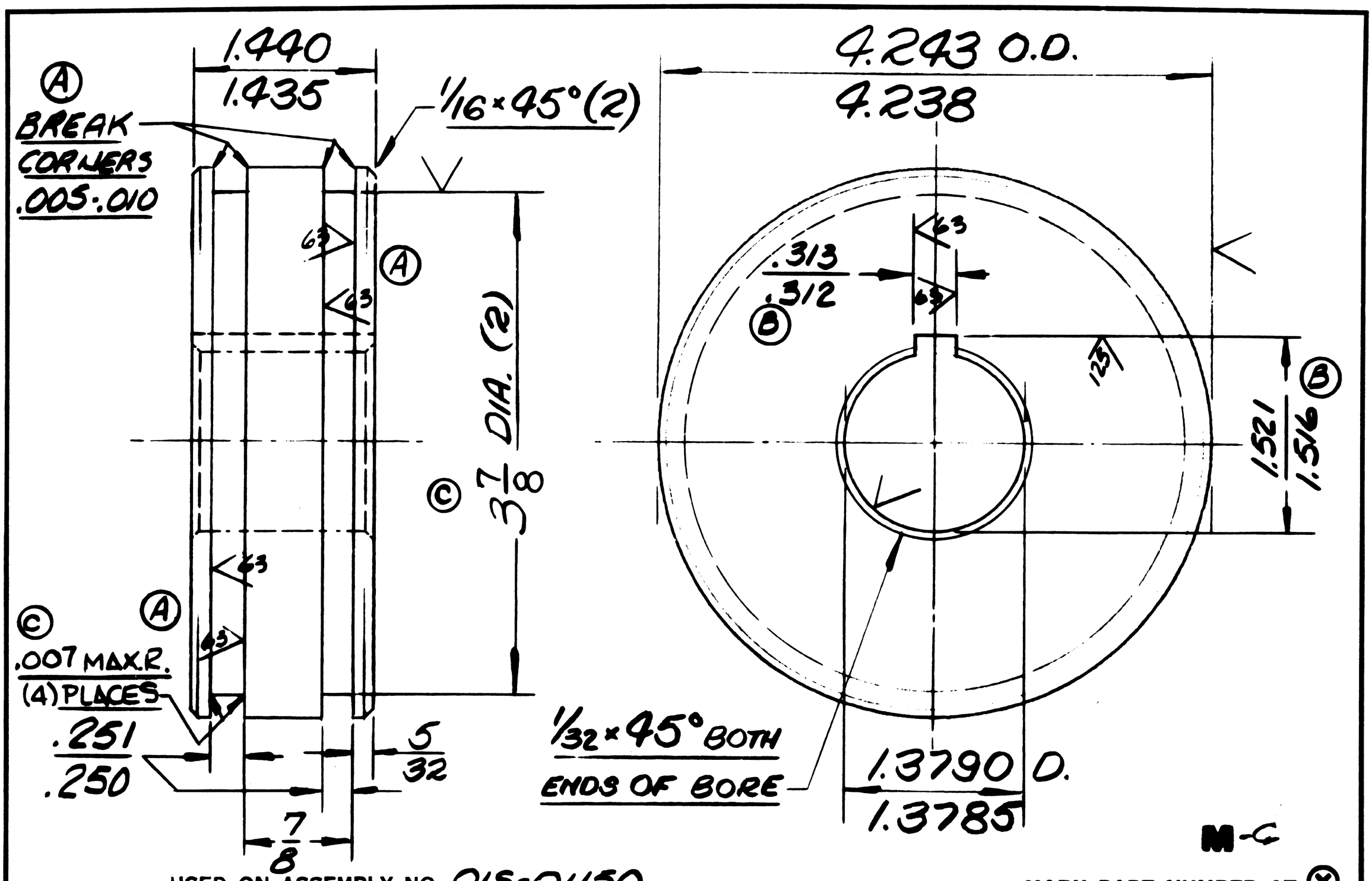

USED ON ASSEMBLY NO. 01S-01150

MARK PART NUMBER AT ⊗

I		D		NAME PISTON			OWENS-ILLINOIS DRAWING NUMBER 01S-9-474
H		C	12-10-92				
G		B	7-13-82	ALL FINISHED FRACTIONAL DIMENSIONS ± .007	DRAWN BRK	CHECKED	DATE 4-10-73	SCALE FULL
F		A	4-14-77	UNLESS SPECIFIED FINISHED SURFACES ROUGHNESS NOT TO EXCEED 63√	MATERIAL AISI-C1117		
E		CHANGES					

Drawing Number 01S-9-474 Change Letter C Changed by RLB

Change Description & Reason 3 7/8 DIA. WAS 3 29/32;
ADDED .007 MAX. R. (4) PLACES;

Form No. CG-164-R2 TO INSURE PISTON RING CLEARANCE;

OWENS-BROCKWAY
GLASS CONTAINERS, a unit of Owens-Illinois

Type
1 - Pattern
2 - Material
3 - Dimension
4 - Finish
5 - Correction
6 - Parts List
7 - Combination
8 - Other

Effectivity
F - Next Manufactured Lot
P - In Process - Up to affected operation + 'F'
U - Unassembled parts - In process, stores, Assembly Floor + 'P'
A - Parts in assemblies + 'U'
T - Parts or assemblies in machines + 'A'
S - Special instructions - for hard parts, machine no's, etc.
R - Record only

Frame No. | Code | T 3 | E P