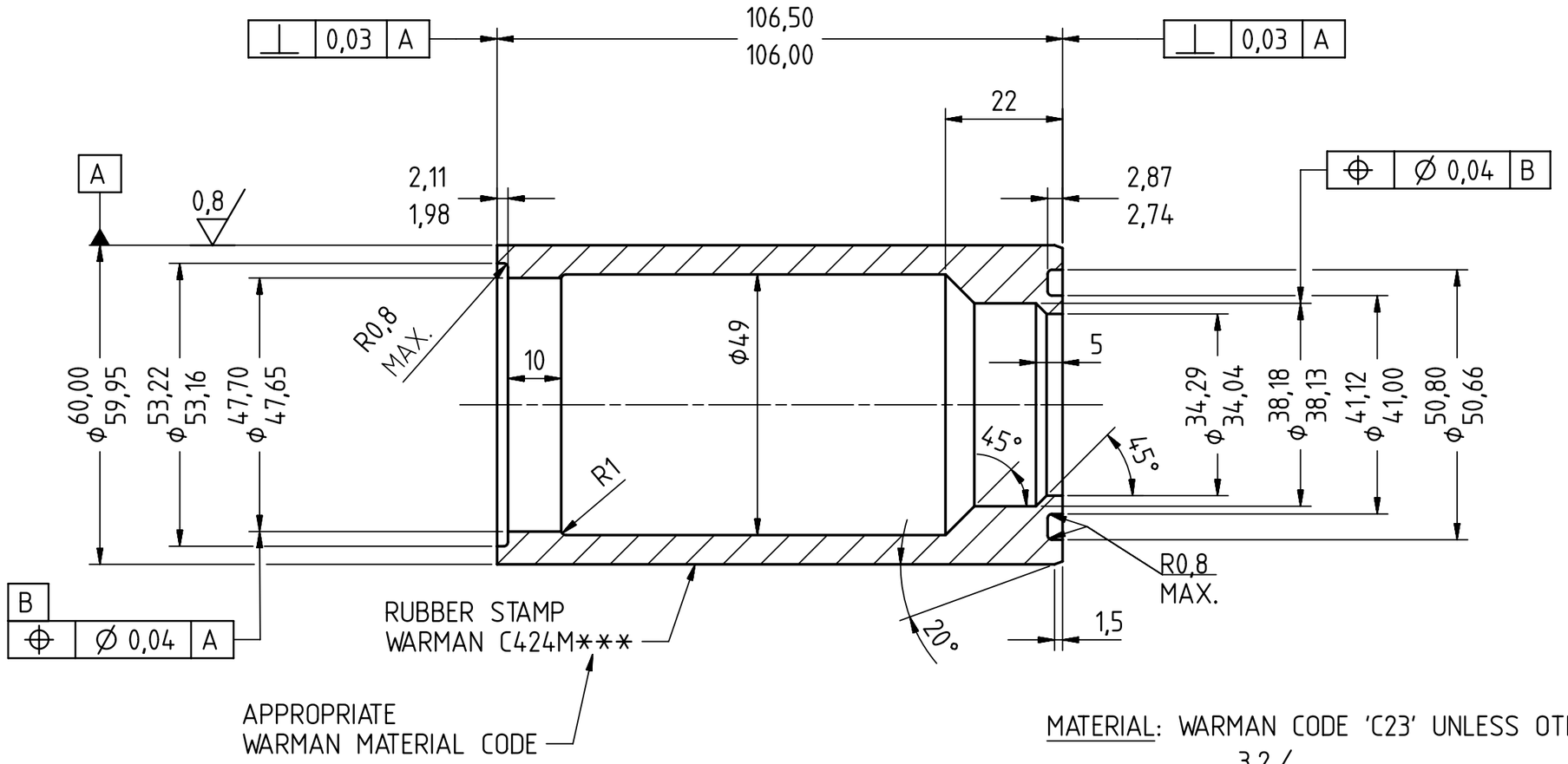

MATERIAL: WARMAN CODE 'C23' UNLESS OTHERWISE SPECIFIED.

NOTE: 1. FINISH 3,2 ALL OVER UNLESS OTHERWISE SPECIFIED.
2. REMOVE ALL BURRS AND SHARP EDGES.

ESTIMATED MASS: 0,9 kg

ENCUMBERANCE: 107 x 60 x 60 △2

REV	DESCRIPTION	DATE	REF NO	BY	CHK
4					
3					
2	3D MODEL CREATED AND REDRAWN. TEAMCENTER STRUCTURE CHANGED FROM DRAWING CENTRIC TO PART CENTRIC. DRAWING BORDER UPDATED. ENCUMBERANCE ADDED.	18SEP2018	PCN-07000872	MNH	APS
1	Φ50,80/50,66 WAS Φ50,80/50,86.	7MAR1996		JLM	MCF

FOR LIMITS OF UNTOLERANCED DIMENSIONS REFER TO DRG. A4-15895.

OFFICE OF ORIGIN : ARTARMON

Copyright © Weir Minerals Australia Ltd. 1995
Weir Minerals Australia Ltd ("the Company") is the owner of the copyright and all confidential information in this drawing.

The drawing must not be copied in whole or in part, in any form or by any means, and the information in it must not be disclosed to any person, or used for any purpose other than the specific purpose for which it has been provided, without the prior written consent of the Company.

SCALE: 1:1
APP: JA
CHK: JA
DRN: J.METCALFE
DATE: 2AUG1995
SHEET 1 OF 1

PRODUCT
WARMAN®
Centrifugal Slurry Pumps

WEIR Minerals

TITLE
SHAFT SLEEVE
C424M***

SHEET SIZE	DRAWING No	REVISION
A3	A131422	2