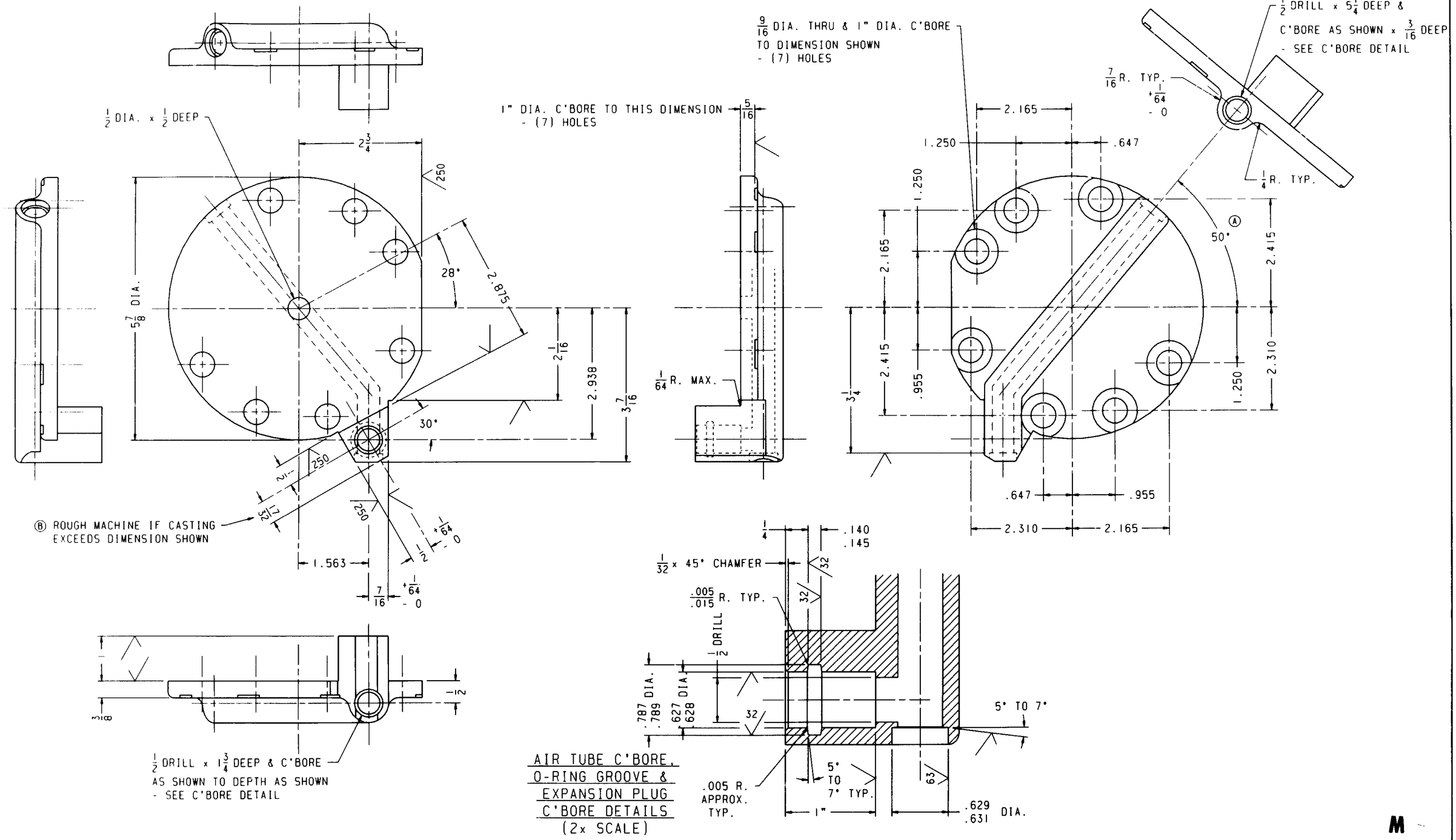

NOTES:

1.) MATERIAL NOTE: ASTM-A536 CLASS 80-55-06 DUCTILE IRON CASTING

2.) UNLESS OTHERWISE SPECIFIED, ALL CAST CORNERS & FILLETS TO BE 1/8" R.

C	1-16-97		
B	12-5-78		
A	1-28-77		
	CHANGES		

"INFORMATION CONTAINED HEREIN CONSTITUTES PROPRIETARY CONFIDENTIAL AND TRADE SECRET INFORMATION OF OWENS-ILLINOIS, INC., AND IS TO BE ACCEPTED SUBJECT TO THAT UNDERSTANDING. IT IS TO BE KEPT CONFIDENTIAL AND NOT TO BE COPIED, USED, OR CONVEYED TO OTHERS WITHOUT OWENS-ILLINOIS' WRITTEN AUTHORIZATION."

PART TOLERANCES UNLESS OTHERWISE NOTED
MAXIMUM FINISHED SURFACE ROUGHNESS: 125
FINISHED DIMENSION TOLERANCES:
ALL FRACTIONAL DIMENSIONS: ±.015
DECIMAL X.X = ±.031 ANGULAR X = ±1°
X.XX = ±.010 X.X = ±.5°
X.XXX = ±.005 X.XX = ±.25°
UNSPECIFIED THREADS ARE CLASS 2, BREAK ALL SHARP EDGES 1/32 MAX. & MARK PART NO. AT Ⓚ

PART NAME:	BOTTOM PLATE		
ASSEMBLY:	BAFFLE MECHANISM		
MATERIAL:	SEE MATERIAL NOTE		
DRAWN:	GWI	SCALE:	FULL
CHECKED:		LIBRARY:	GSD
DATE:	12-3-76	SEQ. NO.:	9183

OWENS-BROCKWAY
GLASS CONTAINERS, a unit of Owens-Illinois
DRAWING NUMBER
OIS-10-352
UNITS: INCHES SHEET NO.:
USED ON: OIS-01074, -01804

M

DRAWING NUMBER OIS-10 352 CHANGE LETTER C CHANGED BY LMN

CHANGE DESCRIPTION & REASON:
CAD CONVERSION ONLY;
NO ACTUAL CHANGE TO PART;

OWENS-BROCKWAY
GLASS CONTAINERS, a unit of Owens-Illinois

TYPE
1 - PATTERN 5 - CORRECTION
2 - MATERIAL 6 - PARTS LIST
3 - DIMENSION 7 - COMBINATION
4 - FINISH 8 - OTHER

EFFECTIVITY
F - NEXT MANUFACTURED LOT
P - IN PROCESS - UP TO AFFECTED OPERATION + 'F'
U - UNASSEMBLED PARTS - IN PROCESS, STORES, ASSEMBLY FLOOR + 'P'
A - PARTS IN ASSEMBLIES + 'U'
I - PARTS OR ASSEMBLIES IN MACHINES + 'A'
S - SPECIAL INSTRUCTIONS - FOR HARD PARTS, MACHINE NO.'S, ETC.
R - RECORD ONLY

FRAME NO. CODE T E 8 R

Impresión generada por: Eduardo Alexander Valadez Arballo
AUTORIZADO
FECHA DE IMPRESIÓN: 22/10/2020
ADN - ADMINISTRACIÓN DE DIBUJOS NETWORK