General Dimension Tolerance			
0 ~ 4	± 0.1	16 ~ 63	± 0.3
4 ~ 16	± 0.2	63 ~	± 0.5

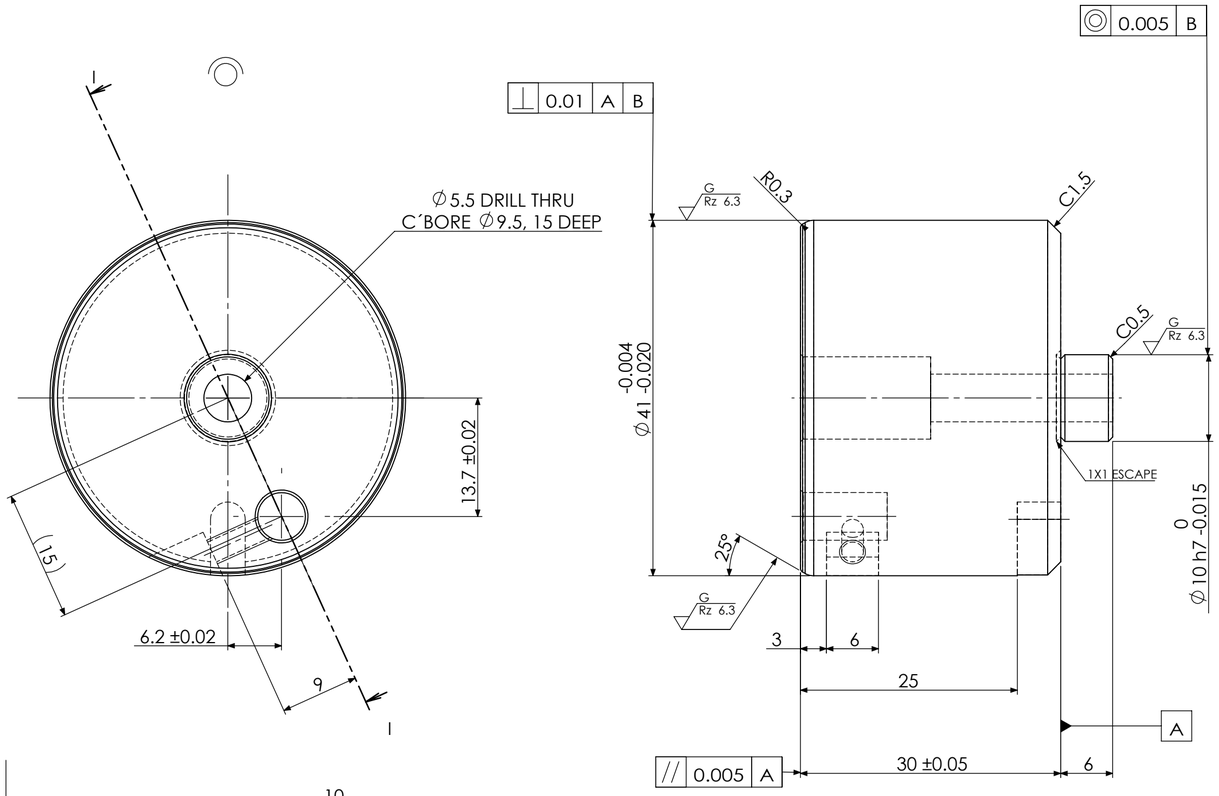

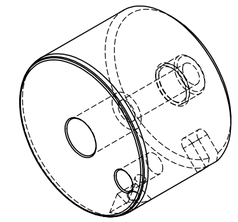

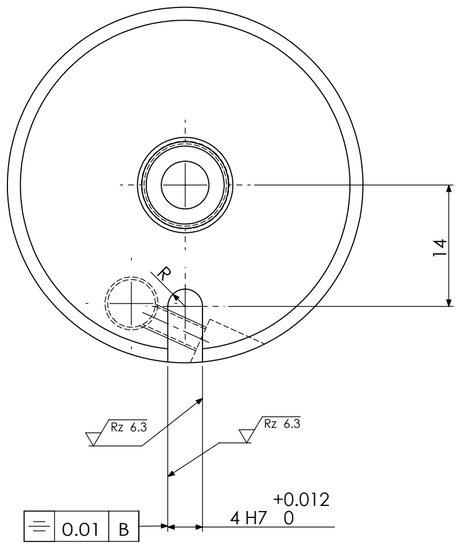

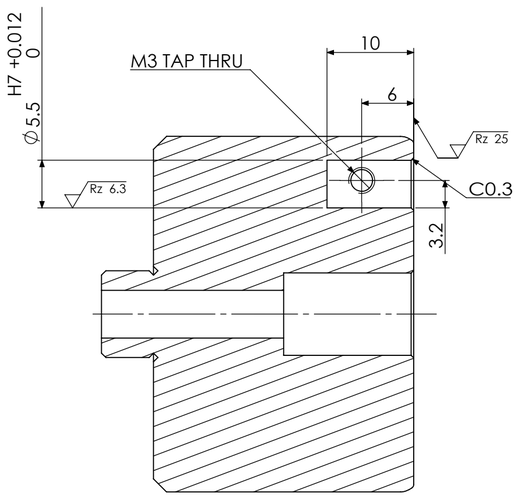

SECTION I-I

Rz 100 (Rz 25 Rz 6.3 G Rz 6.3)

NOTE: ALL EDGES MUST BE C0.5 UNLESS OTHERWISE SPECIFIED

SURFACE TREATMENT	HEAT TREATMENT	WEIGHT
MICr-20 ± 4μm	HRC: 60-62	
ALL PART	QT	

MATERIAL:	RESEMBLANCE PART No.	IMPO CODE	I/O CODE
SKS3 (AISI O1)			

PART NAME: JIG

DENSO MEXICO

APPROVED	CHECKED	CHECKED	DESIGNED	DRAWN

DWG NO. PB-TM-08-1093-34-004 | A2 | ASP CODE | SHEET 1 OF 1

QTY.: 1 | No.: 4 | SCALE:2:1

DENSO

CONFIDENTIAL