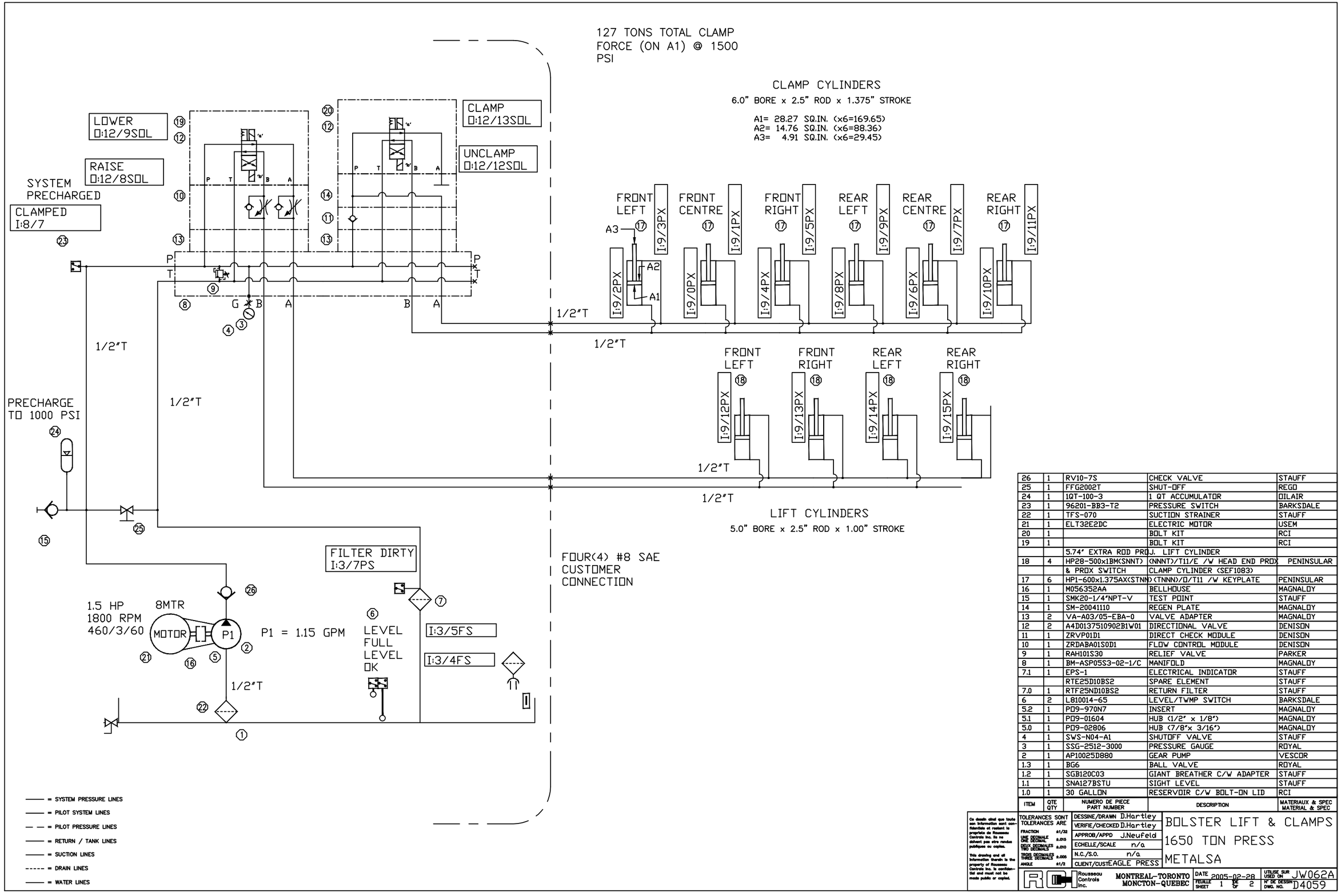

ITEM	QTE QTY	NUMERO DE PIECE PART NUMBER	DESCRIPTION	MATERIAUX & SPEC MATERIAL & SPEC
26	1	RV10-7S	CHECK VALVE	STAUFF
25	1	FFG2002T	SHUT-OFF	REGO
24	1	1QT-100-3	1 QT ACCUMULATOR	OILAIR
23	1	96201-BB3-T2	PRESSURE SWITCH	BARKSDALE
22	1	TFS-070	SUCTION STRAINER	STAUFF
21	1	ELT32E2DC	ELECTRIC MOTOR	USEM
20	1		BOLT KIT	RCI
19	1		BOLT KIT	RCI
		5.74" EXTRA ROD PRO	J. LIFT CYLINDER	
18	4	HP28-500x1BM(SNNT)	(NNNT)/T11/E /W HEAD END PROX	PENINSULAR
		& PROX SWITCH	CLAMP CYLINDER (SEF1083)	
17	6	HP1-600x1.375AX(STNN)	(TNNN)/D/T11 /W KEYPLATE	PENINSULAR
16	1	M056352AA	BELLHOUSE	MAGNALOY
15	1	SMK20-1/4"NPT-V	TEST POINT	STAUFF
14	1	SM-20041110	REGEN PLATE	MAGNALOY
13	2	VA-A03/05-EBA-0	VALVE ADAPTER	MAGNALOY
12	2	A4D0137510902B1W01	DIRECTIONAL VALVE	DENISON
11	1	ZRVP01D1	DIRECT CHECK MODULE	DENISON
10	1	ZRDABA01S0D1	FLOW CONTROL MODULE	DENISON
9	1	RAH101S30	RELIEF VALVE	PARKER
8	1	BM-ASP05S3-02-1/C	MANIFOLD	MAGNALOY
7.1	1	EPS-1	ELECTRICAL INDICATOR	STAUFF
		RTE25D10BS2	SPARE ELEMENT	STAUFF
7.0	1	RTF25ND10BS2	RETURN FILTER	STAUFF
6	2	L810014-65	LEVEL/TWMP SWITCH	BARKSDALE
5.2	1	PD9-970N7	INSERT	MAGNALOY
5.1	1	PD9-01604	HUB (1/2" x 1/8")	MAGNALOY
5.0	1	PD9-02806	HUB (7/8"x 3/16")	MAGNALOY
4	1	SWS-N04-A1	SHUTOFF VALVE	STAUFF
3	1	SSG-2512-3000	PRESSURE GAUGE	ROYAL
2	1	AP10025D880	GEAR PUMP	VESCOR
1.3	1	BG6	BALL VALVE	ROYAL
1.2	1	SGB120C03	GIANT BREATHER C/W ADAPTER	STAUFF
1.1	1	SNA127BSTU	SIGHT LEVEL	STAUFF
1.0	1	30 GALLON	RESERVOIR C/W BOLT-ON LID	RCI

Ce dessin ainsi que toute son information sont confidentiels et restent la propriete de Rousseau Controls Inc. Ils ne doivent pas etre rendus publiques ou copies.

This drawing and all information therein is the property of Rousseau Controls Inc. is confidential and must not be made public or copied.

TOLERANCES SONT TOLERANCES ARE
FRACTION ±1/32
UNE DECIMALE ONE DECIMAL ±.015
DEUX DECIMALES TWO DECIMALS ±.010
TROIS DECIMALES THREE DECIMALS ±.005
ANGLE ±1/2

DESSINE/DRAWN D.Hartley
VERIFIE/CHECKED D.Hartley
APPROB/APPD J.Neufeld
ECHELLE/SCALE n/a
N.C./S.O. n/a
CLIENT/CUST. EAGLE PRESS

BOLSTER LIFT & CLAMPS
1650 TON PRESS
METALSA

Rousseau Controls Inc.
MONTREAL-TORONTO
MONCTON-QUEBEC

DATE 2005-02-28
FEUILLE SHEET 1 DE OF 2
UTILISE SUR USED ON JW062A
N° DE DESSIN DWG. NO. D4059

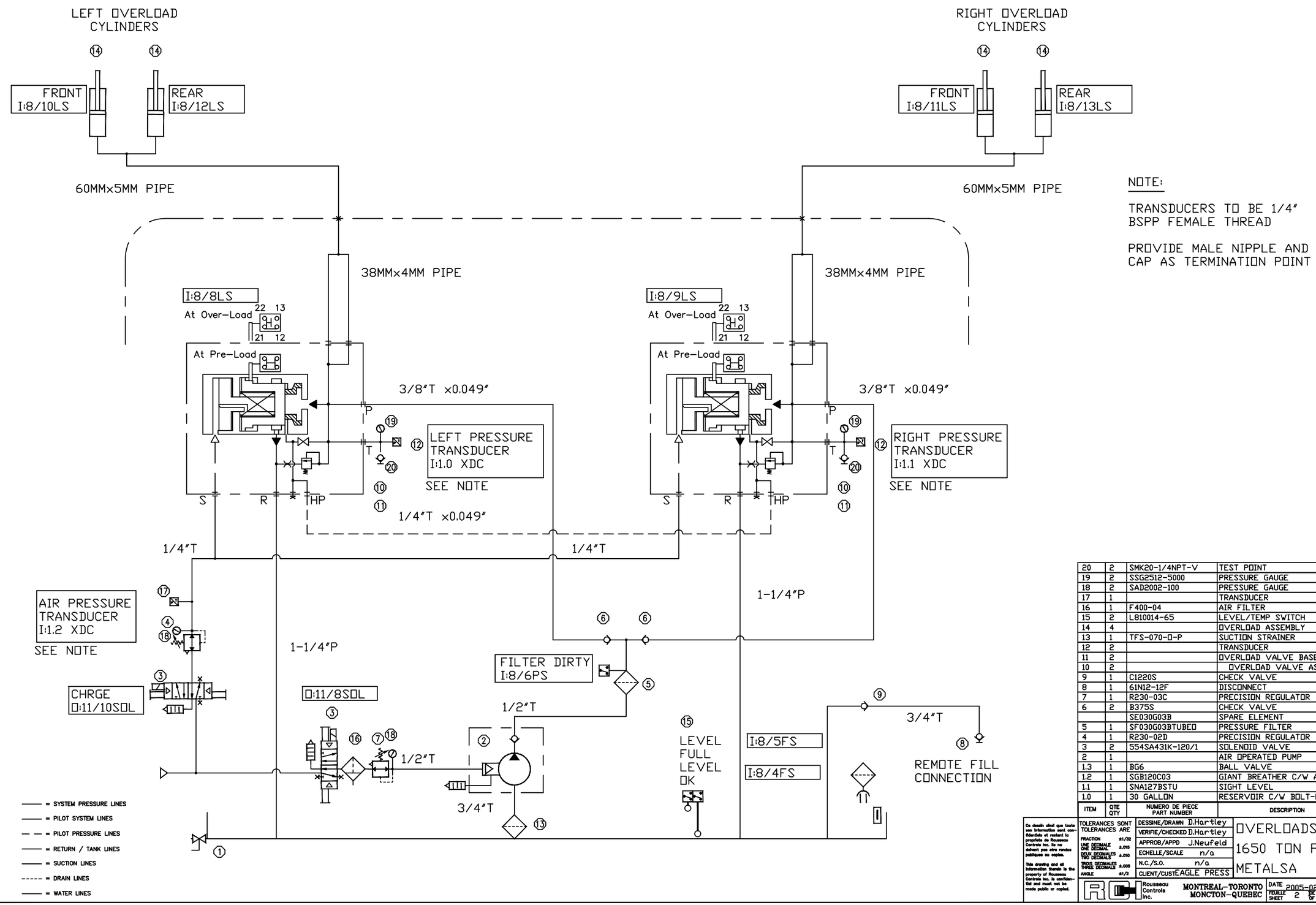

NOTE:

TRANSDUCERS TO BE 1/4" BSPP FEMALE THREAD

PROVIDE MALE NIPPLE AND CAP AS TERMINATION POINT

ITEM	QTE QTY	NUMERO DE PIECE PART NUMBER	DESCRIPTION	MATERIAUX & SPEC MATERIAL & SPEC
20	2	SMK20-1/4NPT-V	TEST POINT	STAUFF
19	2	SSG2512-5000	PRESSURE GAUGE	ROYAL
18	2	SAD2002-100	PRESSURE GAUGE	ROYAL
17	1		TRANSDUCER	SYSTEK
16	1	F400-04	AIR FILTER	ROYAL
15	2	L810014-65	LEVEL/TEMP SWITCH	BARKSDALE
14	4		OVERLOAD ASSEMBLY	EAGLE
13	1	TFS-070-O-P	SUCTION STRAINER	STAUFF
12	2		TRANSDUCER	SYSTEK
11	2		OVERLOAD VALVE BASE	RCI
10	2		OVERLOAD VALVE ASSEMBLY	JIT
9	1	C1220S	CHECK VALVE	PARKER
8	1	61N12-12F	DISCONNECT	SNAPTITE
7	1	R230-03C	PRECISION REGULATOR	WATTS
6	2	B375S	CHECK VALVE	REGO
		SE030G03B	SPARE ELEMENT	STAUFF
5	1	SF030G03BTUBEO	PRESSURE FILTER	STAUFF
4	1	R230-02D	PRECISION REGULATOR	WATTS
3	2	554SA431K-120/1	SOLENOID VALVE	NUMATICS
2	1		AIR OPERATED PUMP	JIT
1.3	1	BG6	BALL VALVE	ROYAL
1.2	1	SGB120C03	GIANT BREATHER C/W ADAPTER	STAUFF
1.1	1	SNA127BSTU	SIGHT LEVEL	STAUFF
1.0	1	30 GALLON	RESERVOIR C/W BOLT-ON LID	RCI

Ce dessin ainsi que toute son information sont confidentielle et restent la propriete de Rousseau Controls Inc. Ils ne doivent pas etre rendus publiques ou copies.

This drawing and all information therein is the property of Rousseau Controls Inc. is confidential and must not be made public or copied.

TOLERANCES SONT TOLERANCES ARE

FRACTION	±1/32
UNE DECIMALE ONE DECIMAL	±.015
DEUX DECIMALES TWO DECIMALS	±.010
TROIS DECIMALES THREE DECIMALS	±.005
ANGLE	±1/2

DESSINE/DRAWN	D.Hartley
VERIFIE/CHECKED	D.Hartley
APPROB/APPD	J.Neufeld
ECHELLE/SCALE	n/a
N.C./S.O.	n/a
CLIENT/CUST	EAGLE PRESS

OVERLOADS
1650 TON PRESS
METALSA

Rousseau Controls Inc.
MONTREAL-TORONTO
MONCTON-QUEBEC

DATE 2005-02-28
FEUILLE SHEET 2 DE OF 2
UTILISE SUR USED ON JW062A
N° DE DESSIN DWG. NO. D4059