General Dimension Tolerance			
0 ~ 4	± 0.1	16 ~ 63	± 0.3
4 ~ 16	± 0.2	63 ~	± 0.5

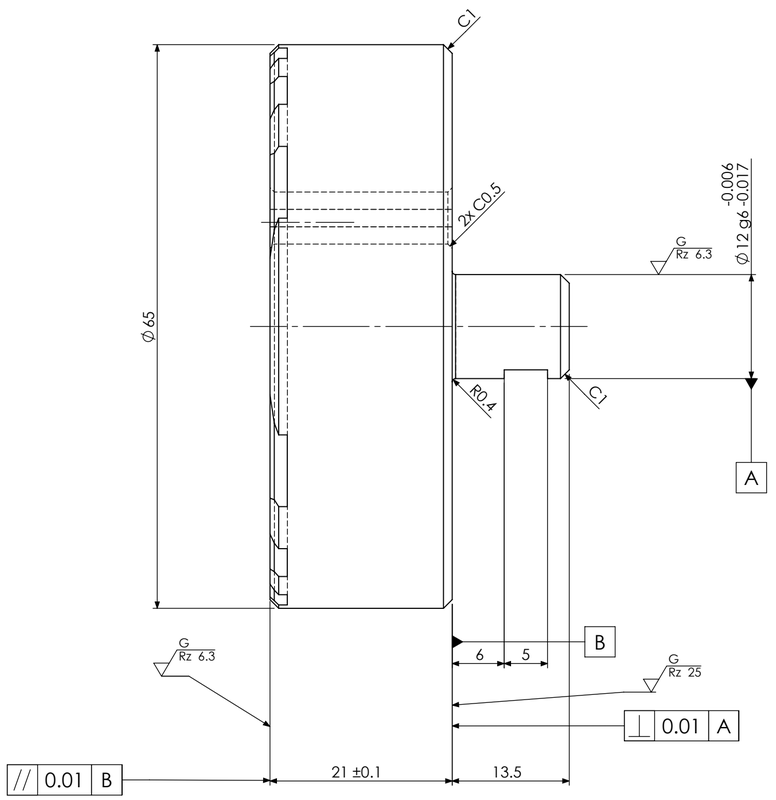

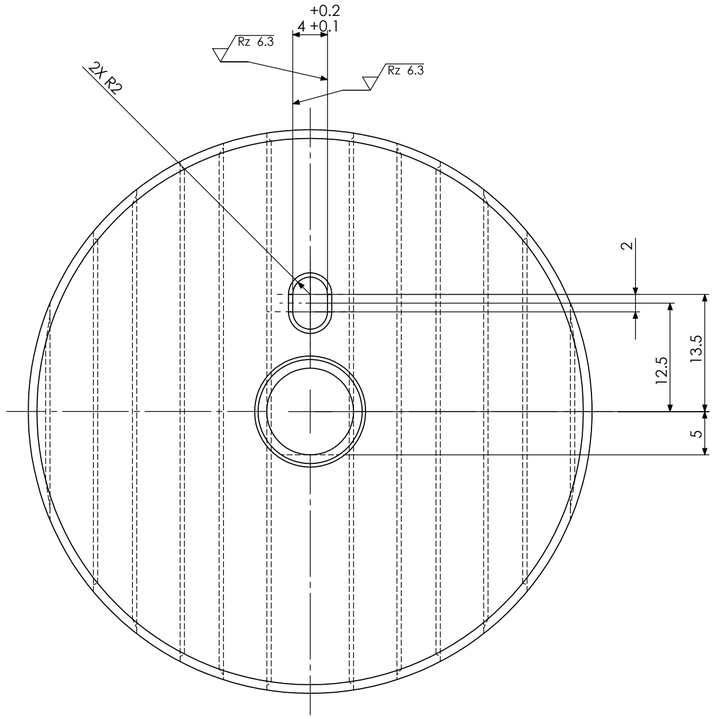

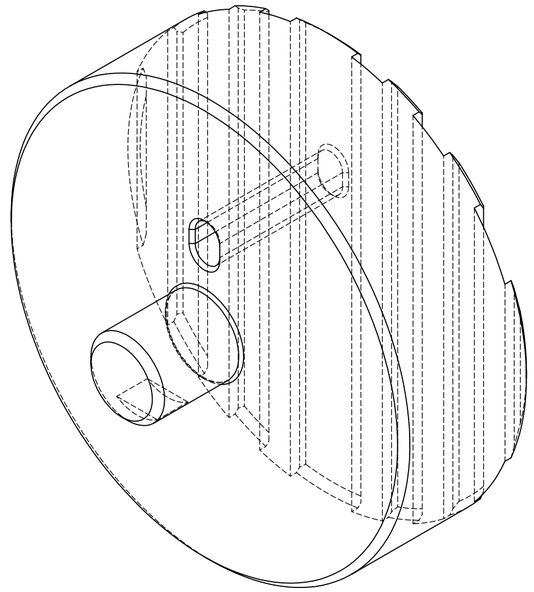

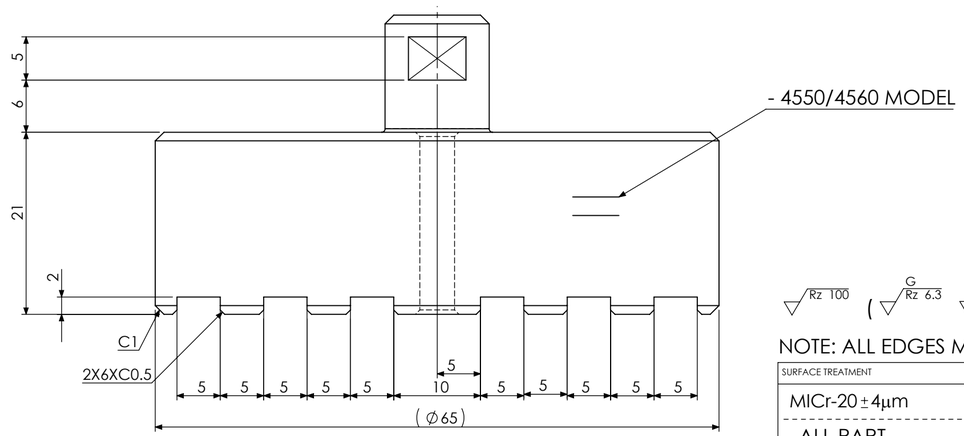

Rz 100 (G Rz 6.3 Rz 25)

NOTE: ALL EDGES MUST BE C0.3 UNLESS OTHERWISE SPECIFIED

SURFACE TREATMENT	HEAT TREATMENT	WEIGHT
MICr-20 ± 4μm	HRC 60-62	
ALL PART	QT	

MATERIAL:	RESEMBLANCE PART No.	IMPO CODE	I/O CODE
SKD11 (ASTM A681 D2)			

PART NAME: PUNCH (TNGA 2.4L EXH/IN)

DENSO MEXICO

APPROVED	CHECKED	CHECKED	DESIGNED	DRAWN	DWG NO.	A2	ASP CODE	SHEET 1 OF 1
				RT	M-2815387-400			
					QTY.: 1	No.: 40		SCALE:2:1

DENSO

CONFIDENTIAL