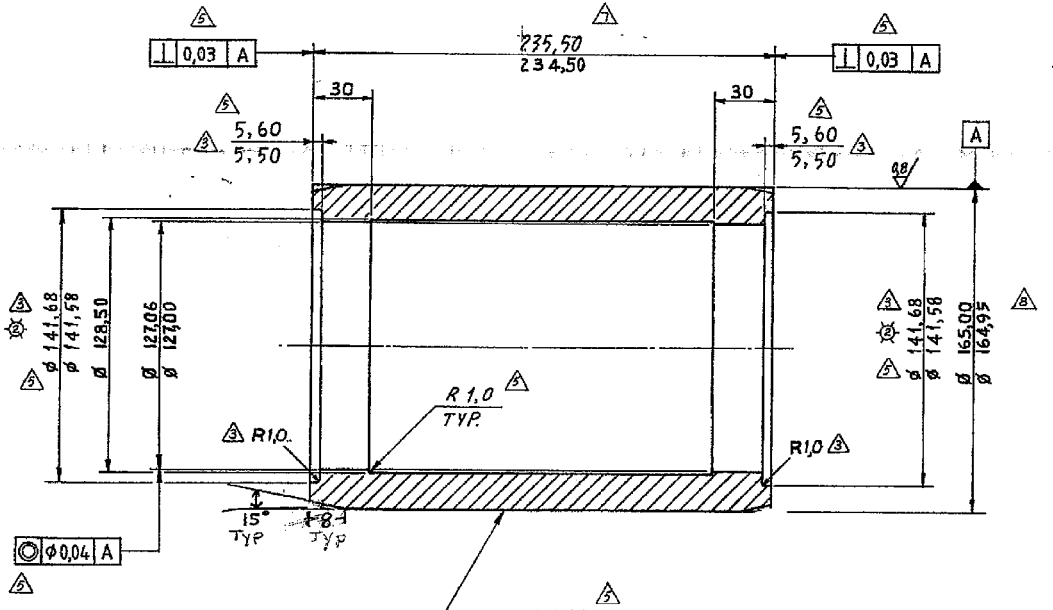

RUBBER STAMP 'WARMAN S076***'

APPROPRIATE
WARMAN MATERIAL CODE

NOTE:

1. FINISH 3,2 ALL OVER UNLESS OTHERWISE SPECIFIED.
2. ~~HARDNESS 55 HRC MINIMUM.~~
3. REMOVE ALL BURRS AND SHARP EDGES.

MATERIAL: WARMAN CODE 'C21' UNLESS OTHERWISE SPECIFIED.
ESTIMATED MASS: 15,4 kg.

© PERCHWALLSEND OPERATIONS LIMITED 1974 PERCHWALLSEND OPERATIONS LIMITED is the owner of the copyright subsisting in this drawing and these designs, specifications and instructions. They must not be used, reproduced or copied in whole or in part, in any form or by any means, nor may the information therein contained, which is confidential to PERCHWALLSEND OPERATIONS LIMITED and its related company WARMAN INTERNATIONAL LTD be disclosed to any person without the prior written consent of PERCHWALLSEND OPERATIONS LIMITED.
The drawing has been delivered and received on the express conditions that it may be used only for the specific purpose for which it has been provided, and may not be used in any way which may injure or cause loss directly or indirectly to PERCHWALLSEND OPERATIONS LIMITED or WARMAN INTERNATIONAL LTD or any related corporation of either company and will be returned to WARMAN INTERNATIONAL LTD immediately on completion of the task for which it has been provided or on demand.

No.	DESCRIPTION	CHK	BY	DATE
8	Ø164,95 WAS Ø164,90	GRS	P.C.	NOV. 20, 1995
7	DIM'N 235,50/234,50 WAS 235,10/234,50		AAB	SEP. 30, 1992
6	DIMENSION 235,10 WAS 235,10 234,50 234,90		I.A	JULY. 2, '92
5	DIMS Ø141,68/Ø141,58/Ø128,50/Ø127,06 WERE Ø142,00/Ø142,00/Ø127,50/Ø127,00 R 1,0 TYP. ADDED. NOTES REVISED. TITLE: 'SHAFT SLEEVE' WAS 'SHAFT SLEEVE LONG'.	VHS		21 MAR '91

REVISIONS

APP.	
CHECK	ABF
DRN.	R. DELANY
DATE	9·5·74
SCALE	1 : 2

WARMAN PUMP
SHAFT SLEEVE - 'S076***'

WARMAN EQUIPMENT
(INTERNATIONAL) LTD.
OFFICE OF ORIGIN : SYDNEY

A3-110 -0- 1134

REV. 8

mck 2