NAME	DATE	TIME (HRS)

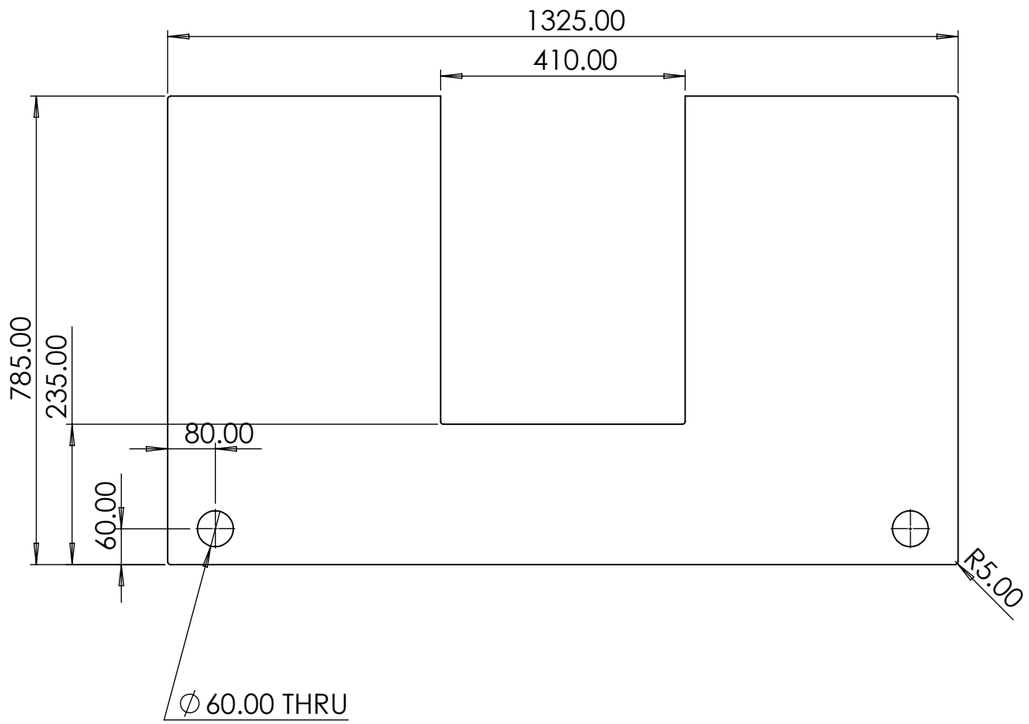

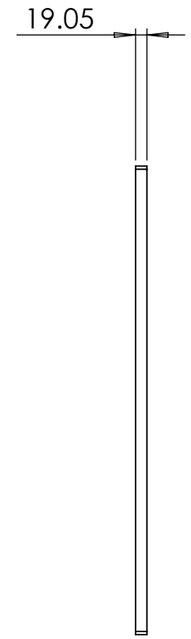

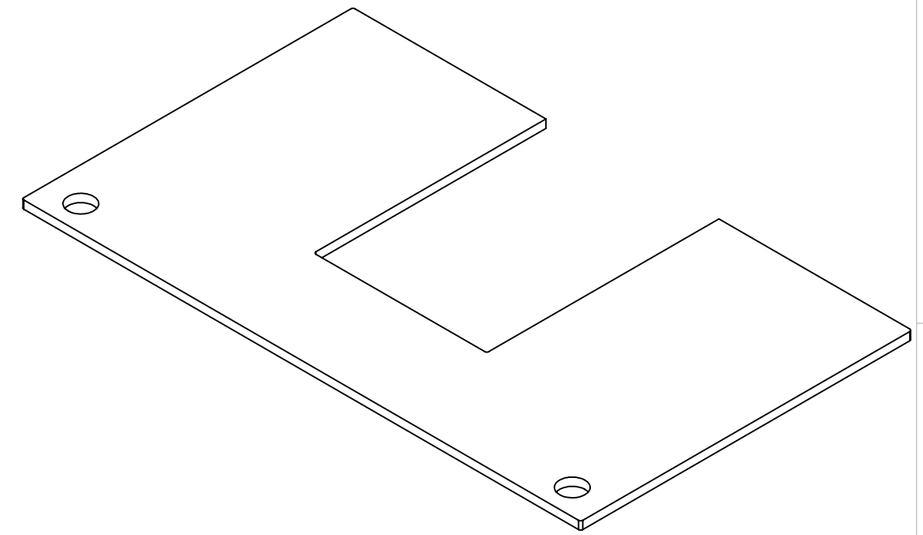

CM001-TRN-300-007

PAG. 1 de 1

E MEDIDA ESPECIAL

ALL TECHNICAL DATA DISCLOSED HERE IN IS THE PROPERTY OF JOYSON SAFETY SYSTEMS AND SHALL NOT BE USED BY ANY OTHER MANUFACTURER, PROCUREMENT OR DISCLOSURE WITHOUT WRITTEN PERMISSION OF THE OWNMER.

AUTHORIZE	TALLER	QUALITY

NOTES:

Pieza libre de filos y rebabas.

REV	DESCRIPTION	DATE	APPROVED

REVIEWS

TOTAL OF PIECES: 1 Pza.

ANG. PROF

UNLESS OTHERWISE SPECIFIED

TOLERANCES DIMENSIONS	MM	INCHES	ANGLES
ISO 2768-1 mK-E ASME Y14.5M-1994	+.1 -.1	+.004 -.004	+1° -1°

MATERIAL: 6061 ALUMINIUM

SURFACE TREATMENT: PULIDO

HARDNESS: N.A

JOYSON SAFETY SYSTEMS

APPROVALS		DATE
DESIGNER	JMM	5/2/2022
REVIEW	JEC	5/2/2022

JOYSON TECHNICAL CENTER

MODEL NAME	CMM001-TRN	SERIES No	M2022-0160
MACHINE NAME	Crimping Machine		
PART NUMBER	CM001-TRN-300-007		
SIZE **B**	PART NAME		REV.
ESCALE: 1:10		DRAWING IN MILLIMETERS	

JSSAM-JTC-MF-FM-0002-001