NAME	DATE	TIME (HRS)

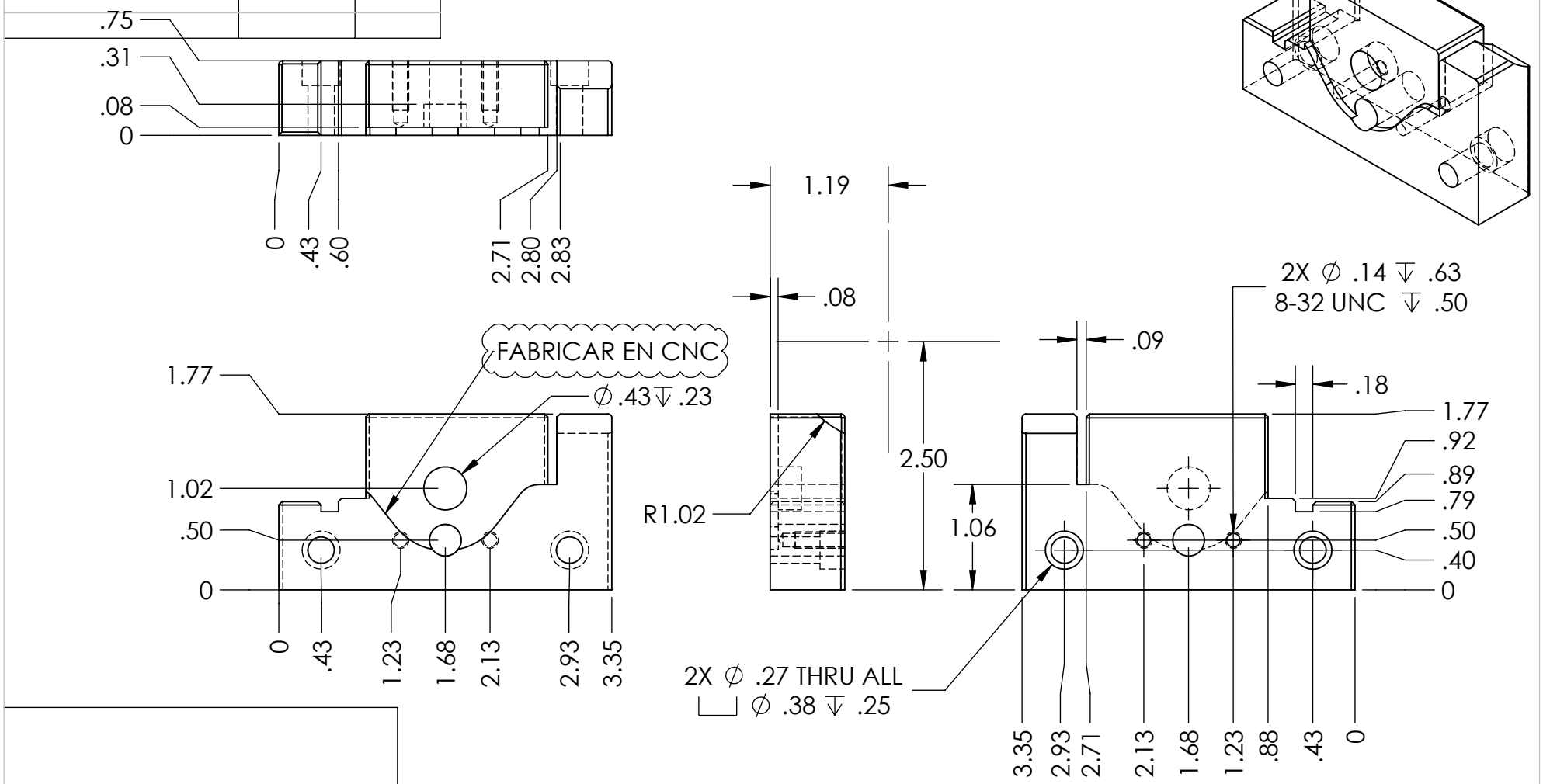

QUALITY

AUTHORIZE

TALLER

NOTES:
Pieza libre de filos y rebabas.

TOTAL OF PIECES	1 Pzas.
ANG. PRO	

REV	DESCRIPTION	DATE	APPROVED

REVIEWS

UNLESS OTHERWISE SPECIFIED

TOLERANCES DIMENSIONS ISO 2768-1 mK-E ASME Y14.5M-1994

MM	INCHES	ANGLES
+.1 -.1	+.004 -.004	+1°-1°

MATERIAL: ACERO 4140 T

SURFACE TREATMENT N.A.

HARDNESS N/A

GT001-AC-051 PAG. 1 de 2

E **MEDIDA ESPECIAL**

JOYSON SAFETY SYSTEMS

APPROVALS	DATE
DESIGNER MCRH	24/JUN/2021
REVIEW JATA	24/JUN/2021

ALL TECHNICAL DATA DISCLOSED HERE IN IS THE PROPERTY OF JOYSON SAFETY SYSTEMS AND SHALL NOT BE USED BY ANY OTHER MANUFACTURER, PROCUREMENT OR DISCLOSURE WITHOUT WRITTEN PERMISSION OF THE OWNMER.

JOYSON TECHNICAL CENTER

MODEL NAME: GT001-AC SERIES No: M2021-089

MACHINE NAME: G-TESTER NUM.1

PART NUMBER: GT001-AC-051

SIZE **A** PART NAME PART 051 REV. **A**

ESCALE 1:1 **DRAWING IN** INCHES

JSSAM-JTC-MF-FM-0002-001

NAME	DATE	TIME (HRS)

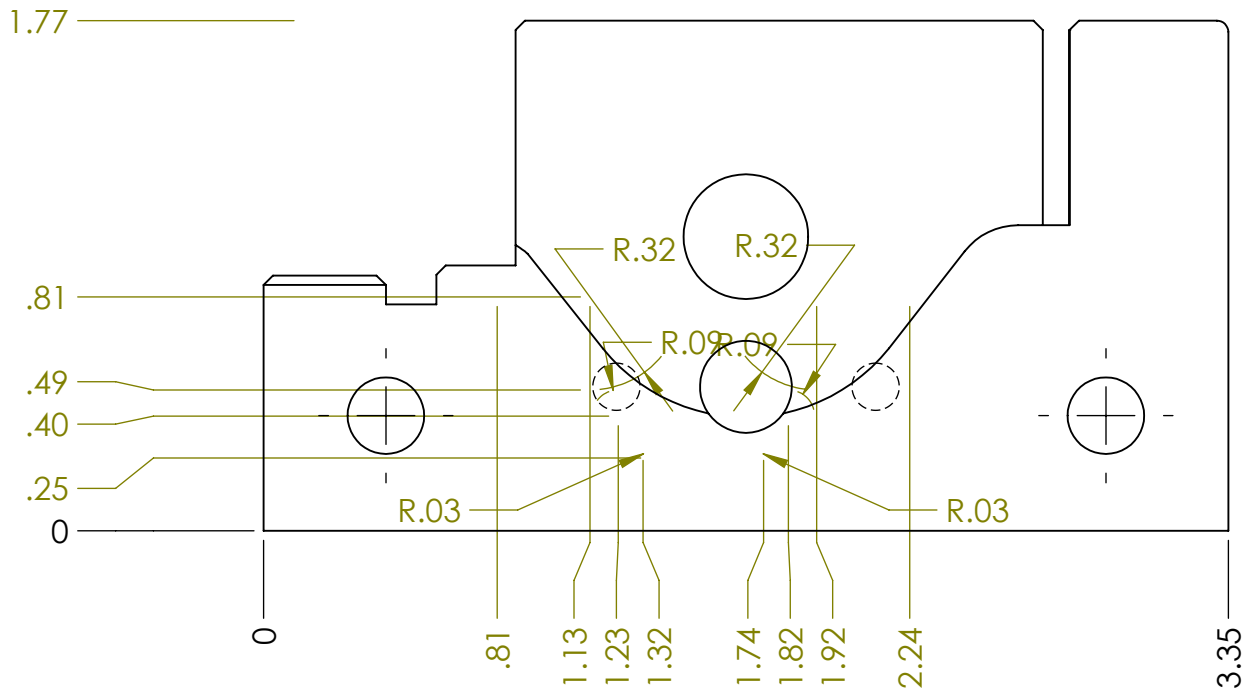

QUALITY

AUTHORIZE

TALLER

NOTES:

SHEET 2 OF 2

TOTAL OF PIECES	1 PCS
ANG. PRO	

REV	DESCRIPTION	DATE	APPROVED

REVIEWS

UNLESS OTHERWISE SPECIFIED

TOLERANCES ISO 2768-1 mK-E
DIMENSIONS ASME Y14.5M-1994

MM	INCHES	ANGLES
+.1 -.1	+.004 -.004	+1°-1°

MATERIAL: ACERO 4140 T

SURFACE TREATMENT N.A.

HARDNESS N/A

GT001-AC-051

TAKATA

APPROVALS		DATE
DESIGNER	MASL	21/07/2021
REVIEW	JANR	21/07/2021

ALL TECHNICAL DATA DISCLOSED HERE IN IS THE PROPERTY OF TAKATA SEAT BELTS INC. AND SHALL NOT BE USED BY ANY OTHER MANUFACTURER, PROCUREMENT OR DISCLOSURE WITHOUT WRITTEN PERMISSION OF THE OWNMER.

TAKATA MONTERREY TECHNICAL CENTER

MODEL NAME: GTM001-AP | SERIES No: M2015-180

MACHINE NAME: G Tester Machine

PART NUMBER: GT001-AC-051

SIZE	PART NAME	REV.
A	PART 051	A

ESCALE	1:1	DRAWING IN	INCHES

TKH-MTC-MF-FM-0016-002