F 319801

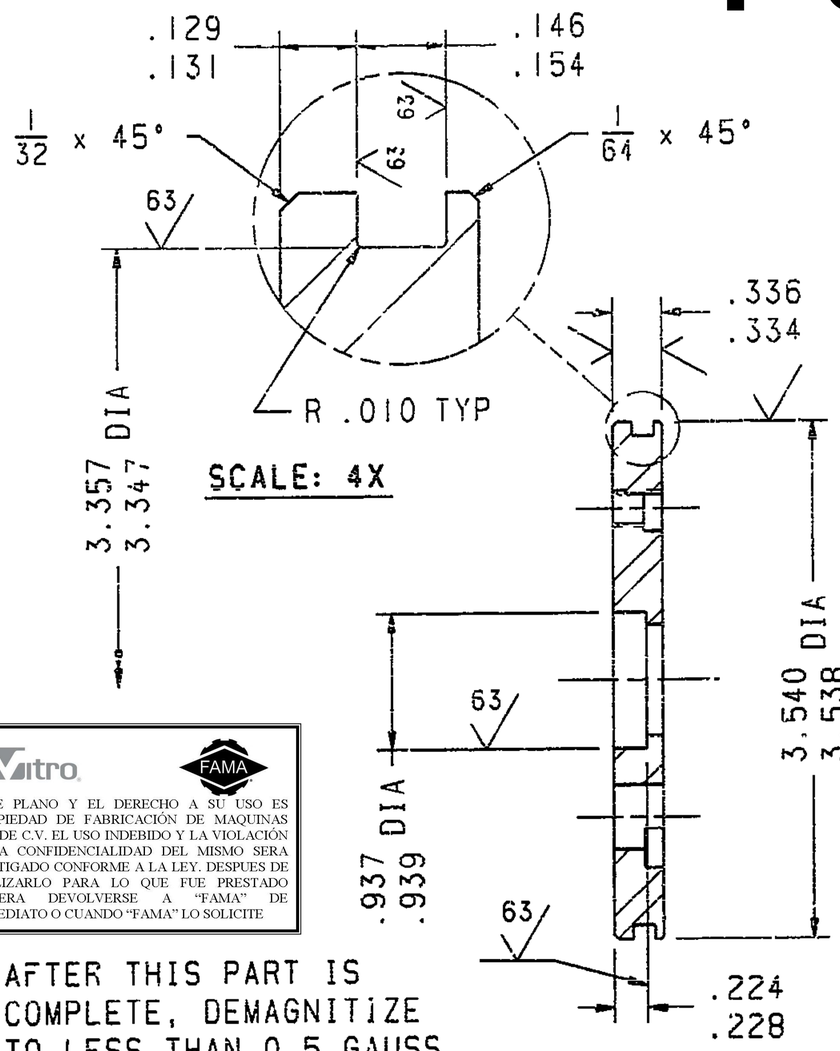

SECTION A – A

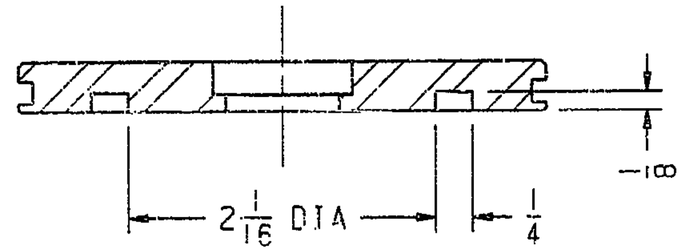

SECTION B – B

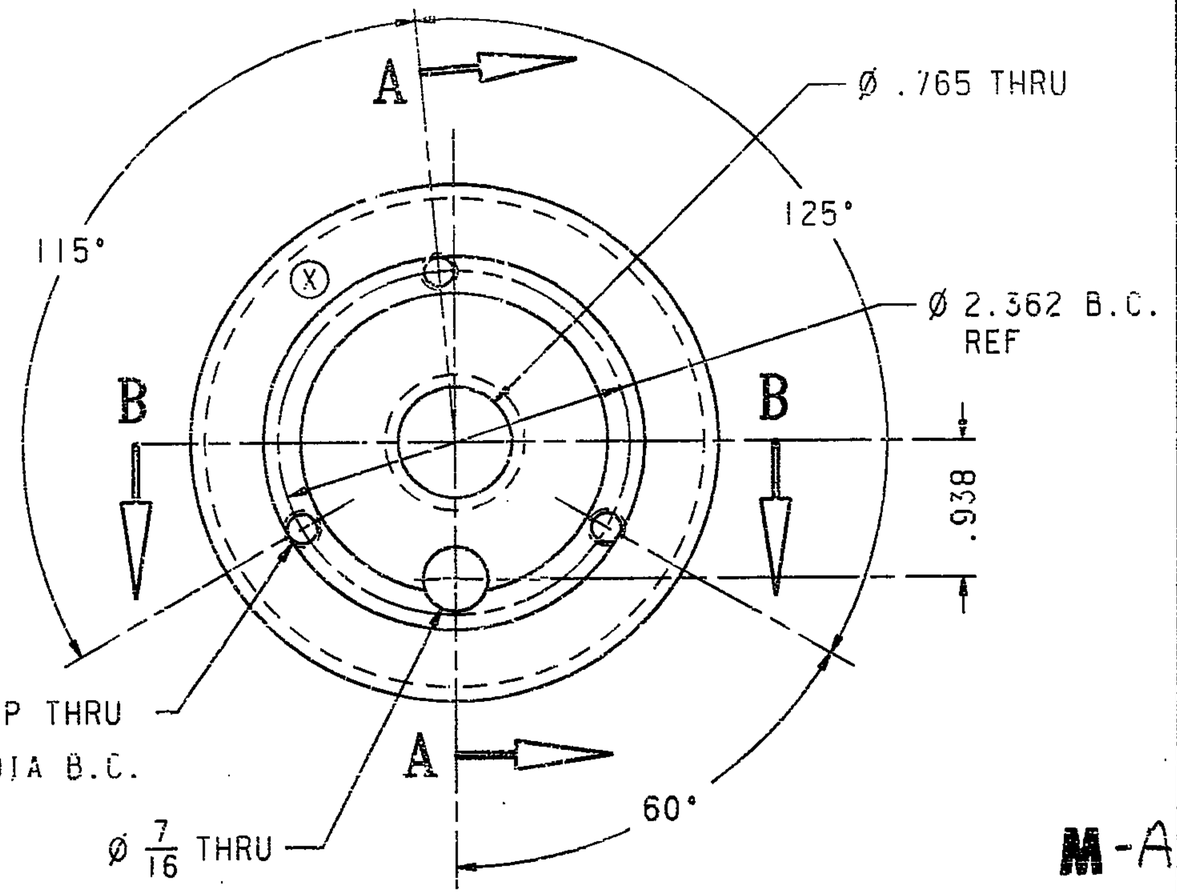

M-A

Vitro FAMA

ESTE PLANO Y EL DERECHO A SU USO ES PROPIEDAD DE FABRICACIÓN DE MAQUINAS S.A. DE C.V. EL USO INDEBIDO Y LA VIOLACIÓN A LA CONFIDENCIALIDAD DEL MISMO SERA CASTIGADO CONFORME A LA LEY. DESPUES DE UTILIZARLO PARA LO QUE FUE PRESTADO DEBERA DEVOLVERSE A "FAMA" DE INMEDIATO O CUANDO "FAMA" LO SOLICITE

(A)

NOTE: AFTER THIS PART IS COMPLETE, DEMAGNITIZE TO LESS THAN 0.5 GAUSS

A	12-15-99		
CHANGES			

"INFORMATION CONTAINED HEREIN CONSTITUTES PROPRIETARY CONFIDENTIAL AND TRADE SECRET INFORMATION OF OWENS-ILLINOIS, INC., AND IS TO BE ACCEPTED SUBJECT TO THAT UNDERSTANDING. IT IS TO BE KEPT CONFIDENTIAL AND NOT TO BE COPIED, USED, OR CONVEYED TO OTHERS WITHOUT OWENS-ILLINOIS' WRITTEN AUTHORIZATION."

PART TOLERANCES UNLESS OTHERWISE NOTED
MAXIMUM FINISHED SURFACE ROUGHNESS: 125 √
FINISHED DIMENSION TOLERANCES:
ALL FRACTIONAL DIMENSIONS: ±.015
DECIMAL X.X = ±.031 ANGULAR X = ±1°
X.XX = ±.010 X.X = ±.5°
X.XXX = ±.005 X.XX = ±.25'
UNSPECIFIED THREADS ARE CLASS 2, BREAK ALL SHARP EDGES 1/32 MAX. & MARK PART NO. AT (X)

PART NAME:	CYLINDER HEAD		
MATERIAL:	AISI 1045 STEEL		
TREATMENT:	NORMALIZED CONDITION		
DRAWN:	DMP/RLS	SCALE:	FULL
CHECKED:		LIBRARY:	GSD
DATE:	3-3-93	SEQ. NO.:	15276

OWENS-BROCKWAY OI
GLASS CONTAINERS, a unit of Owens-Illinois
DRAWING NUMBER
OIS-100-1414
UNITS: INCHES SHEET NO.:
USED ON: OIS-03049

DRAWING NUMBER OIS-100-1414 CHANGE LETTER A CHANGED BY DCM

CHANGE DESCRIPTION & REASON:
- REDRAWN ON CAD
- ADDED "NOTE: AFTER THIS PART IS COMPLETE, DEMAGNITIZE TO LESS THAN 0.5 GAUSS"

RE: GODFREY REQUEST

OWENS-BROCKWAY OI
GLASS CONTAINERS, A UNIT OF OWENS-ILLINOIS

TYPE
1 - PATTERN
2 - MATERIAL
3 - DIMENSION
4 - FINISH
5 - CORRECTION
6 - PARTS LIST
7 - COMBINATION
8 - OTHER

EFFECTIVITY
F - NEXT MANUFACTURED LOT
P - IN PROCESS - UP TO AFFECTED OPERATION + 'F'
U - UNASSEMBLED PARTS - IN PROCESS, STORES, ASSEMBLY FLOOR + 'P'
A-- PARTS IN ASSEMBLIES + 'U'
T - PARTS OR ASSEMBLIES IN MACHINES + 'A'
S - SPECIAL INSTRUCTIONS - FOR HARD PARTS, MACHINE NO.'S, ETC.
R - RECORD ONLY

FRAME NO.	CODE	T	E
		8	P