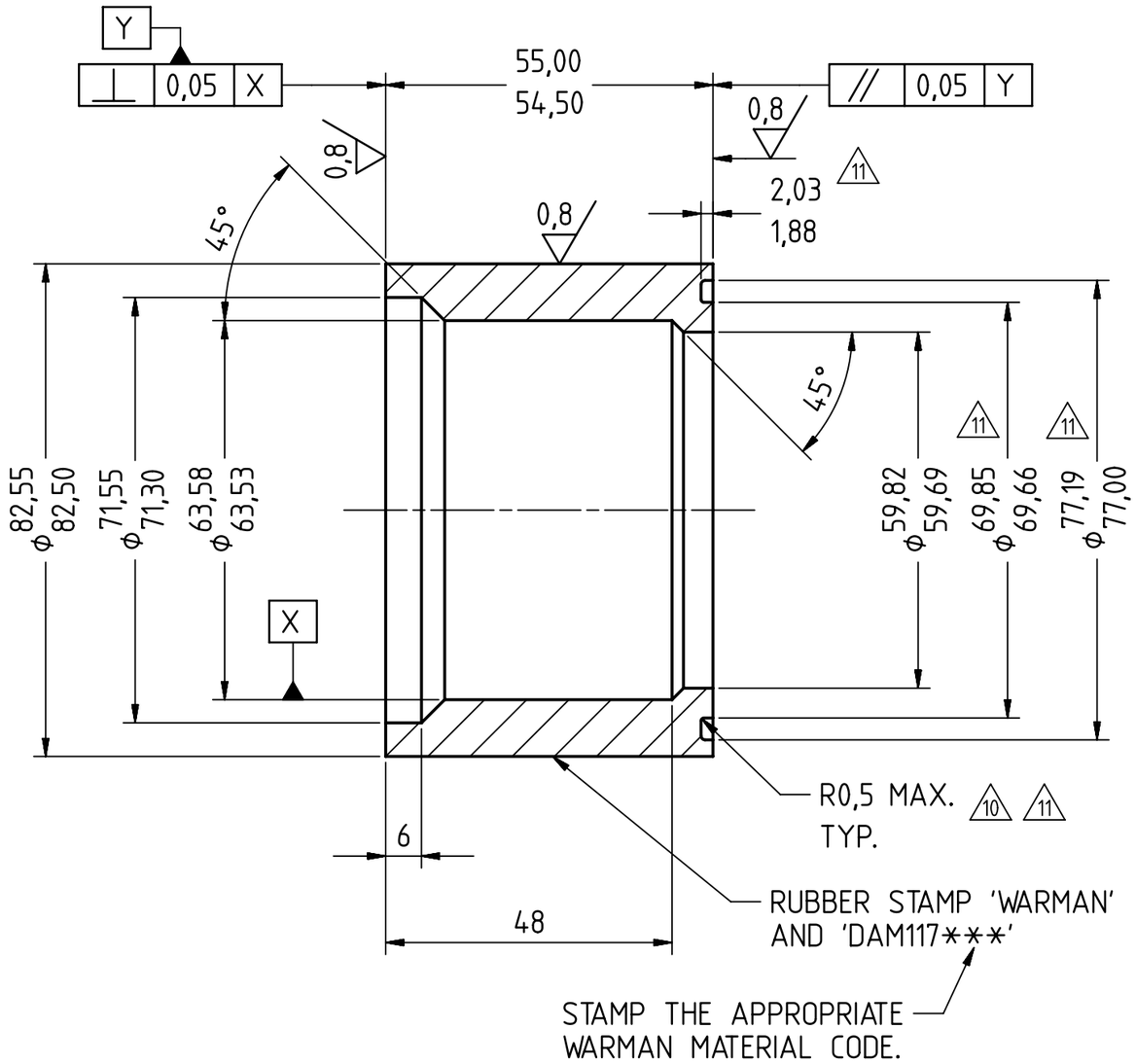

SECTION A-A

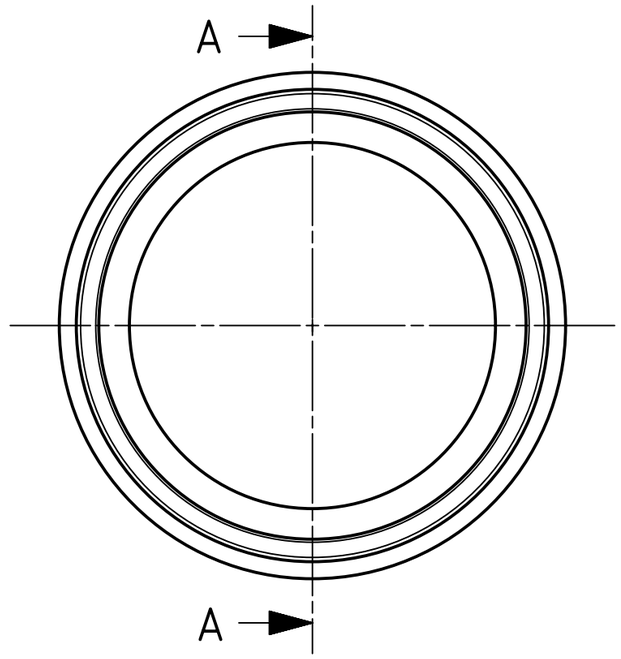

12 NOTE : 1. MACHINE 3,2 ALL OVER, UNLESS OTHERWISE SPECIFIED.

2. ALL MACHINED DIAS. ⌖ ∅ 0,05 X

3. REMOVE ALL BURRS AND SHARP EDGES.

MATERIAL : WARMAN CODE C21 UNLESS OTHERWISE SPECIFIED.

ESTIMATED MASS : 0,9 kg.

ENCUMBRANCE : 83 x 83 x 55

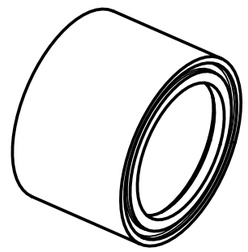

REV	DESCRIPTION	DATE	REF NO	BY	CHK
13	TEAMCENTER STRUCTURE UPDATED TO WORK STRUCTURE. NO DIMENSIONAL CHANGES.	15APR2020	ML16001	SLS	APS
12	TEAMCENTER ITEM CHANGED FROM DRAWING CENTRIC TO PART CENTRIC. NOTE RELATED TO HARDNESS REMOVED. DRAWING SHEET CHANGED FROM A4 TO A3 AND DRAWING BORDER UPDATED.	4MAY2018	EDR-MD18014	BP	KS
11	DIM ϕ69,85/69,66 WAS ϕ69,60/69,47 ϕ77,19/77,00 WAS ϕ76,87/76,70 R0,5 WAS R0,7 & 2,03/1,88 WAS 2,11/1,98.	30NOV2005		EVC	SJW
10	REDRAWN ON CAD. R0,70 MAX. TYP, MASS & ENCUMBRANCE ADDED. GEOMETRIC TOL REVISED.	17SEP2002		EVC	AMM

FOR LIMITS OF UNTOLERANCED DIMENSIONS REFER TO DRG. A4-15895.

OFFICE OF ORIGIN : ARTARMON

SCALE: 1:1

APP: -

CHK: JA

DRN: CW

DATE: 15DEC1976

SHEET 1 OF 1

Copyright © Weir Minerals Australia Ltd. 1976
Weir Minerals Australia Ltd ("the Company") is the owner of the copyright and all confidential information in this drawing.

The drawing must not be copied in whole or in part, in any form or by any means, and the information in it must not be disclosed to any person, or used for any purpose other than the specific purpose for which it has been provided, without the prior written consent of the Company.

PRODUCT
WARMAN®
Centrifugal Slurry Pumps

WEIR Minerals

TITLE
SHAFT SPACER DAM117***

SHEET SIZE	DRAWING No	REVISION
A3	ESY2288	13