Stock List

ITEM	QTY	MATERIAL	DESCRIPTION
a	2	PTR	1-1/2" X 1-1/2" X 1/8" THK X 150.0 mm LG
b	3	UNICANAL	UNICANAL LISO 40 mm X 20 mm X 600.0 mm LG
c	1	PTR	2" X 2" X 1/8" THK X 498.4 mm LG
d	2	PTR	2" X 2" X 1/8" THK X 600.0 mm LG
e	2	PTR	2" X 2" X 1/8" THK X 1850.0 mm LG
BASE	1	W/C	ASSEMBLY COMPONENT

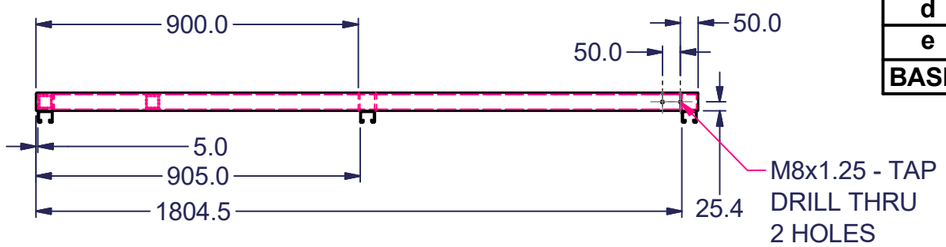

PAINT YELLOW RAL 1023

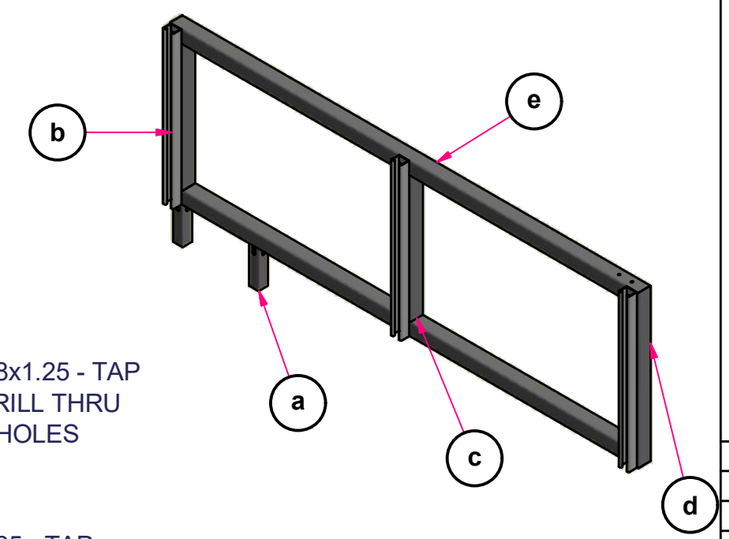

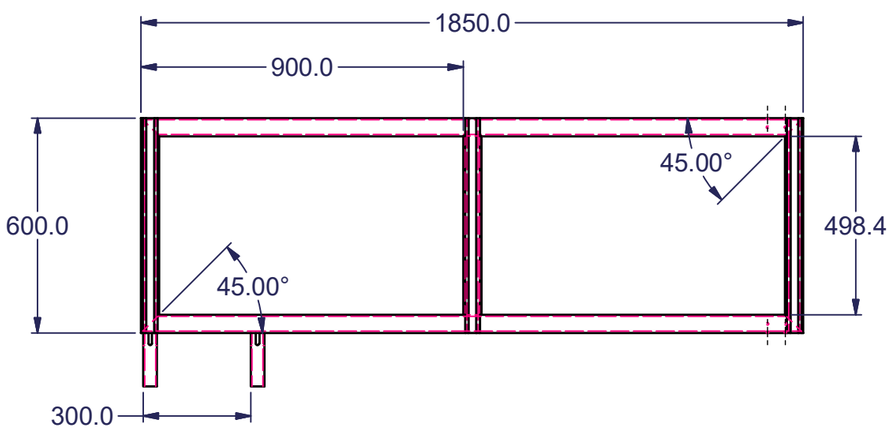

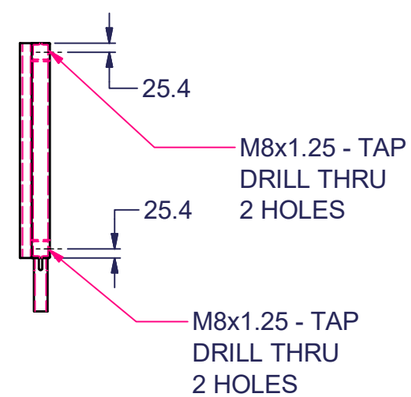

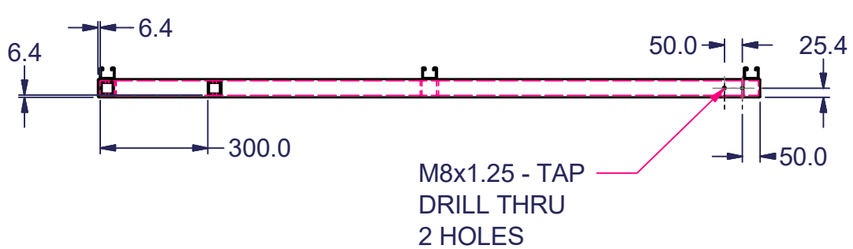

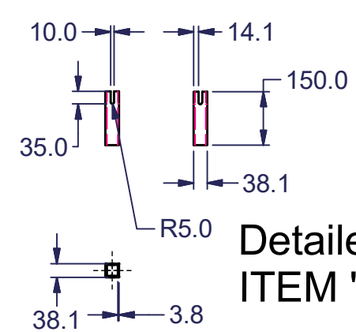

Detailed
ITEM "a"

COSMA INNOVATIVE MANUFACTURING SOLUTIONS

REV	CHANGE	CHK'D	DATE

THIS DRAWING MAY USE BOTH INCH AND METRIC UNITS OF MEASUREMENT (*INDICATES INCH DIMENSIONS)

MAXIMUM ALLOWANCE ROUGHNESS OF ALL METRIC.

1 PLACE mm FINISH DIMENSIONS TO BE 3.2 MICRONS
2 PLACE mm FINISH DIMENSIONS TO BE 1.6 MICRONS
3 PLACE mm FINISH DIMENSIONS TO BE 0.5 MICRONS
ALL GROUND SURFACES TO BE 0.4 MICRONS.
METRIC - EXCEPT AS NOTED TOLERANCES SHALL BE:
1 PLACE MACHINING ˙0.3
1 PLACE FABRICATION ˙1.5
2 PLACE ˙0.08 BETWEEN MACHINED SURFACES
˙0.03 BETWEEN SINGLE DOWEL AND A HEEL SURFACE
˙0.03 BETWEEN DOWELS IN THE SAME PLANE
˙0.10 BETWEEN DOWELS IN DIFFERENT PLANES
˙0.13 TO SCREW HOLES, NON ACCUMULATIVE
ALL O SURFACES MUST BE FINISHED EXCEPT FOR COLD DRAWN SURFACES.

ALL EDGES OF PART CONTACT SURFACES ON LOCATING BLOCKS AND FINGERS TO HAVE .12R INCH / 3.00 mm AFTER SPOTTING.

MARK INDENTIFICATION AND MATERIAL NUMBERS ON DETAILS.
PAINT INDENTIFICATION NUMBERS ON STRUCTURAL WORK.

CRITICAL FEATURES ARE MARKED WITH "*"

UNIT No.:	01
WEIGHT (KG):	N/A

COTO: 2021-15

- ☐ MOVIL PART RAL
- ☐ FIXED PART RAL
- ☐ BLACK OXIDE
- ☐ WITH OUT PAINT
- ☐ POKA YOKE PAINT

THIS MATERIAL IS PROPERTY OF MAGNA COSMA INTERNATIONALNO RIGHTS ARE GRANTEDTO USE SUCH MATERIAL FOR ANY PURPOSE OTHER THAN FURNISHING OF SERVICES AND SUPPLIES

DESIGN SOURCE	BUILD SOURCE	CUSTOMER
MAGNA	MAGNA	NAVISTAR

DESIGNER	DETAILER	3RD ANGLE PROYECTION
R.BELLO	R.BELLO	

PROJECT MGR.	DESIGN SUP.	CHECKER
A.RANGEL	C.MONTES	C.MONTES

SYSTEM NAME: NVT_E79_BUS CAB

DESCRIPTION: SOPORTE TUBERIA LADO L

SCALE	SHEET	RELEASE DATE
NONE	4 OF 4	6/16/2022

DRAWING No.
SHOWN: SOPORTE TUBERIA LADO L
OPPOSITE

C:\Users\rbello\OneDrive - Magna\NAVISTAR\NAVISTAR\SYSTEM LEVEL\LIBERACIONES\SOPORTE PARA TUBERIA ST200_G\FID-08-1 2D FORMAT_SOPORTE TUBERIA LADO L.idw