	FLANGE DATA									BOLT DATA			PIPE	FLANGE WT.		PUMP DATA
	PUMP SIZE	"A"	"B"	"C"	HOLES NO.	HOLES SIZE	P.C.D.	RAW MATERIAL	WARMAN PART NO.	BOLT SIZE	WARMAN PART NO.	QTY.	NOM. SIZE	FAB.	FINISH	PRESSURE
	1.5/1 AH	1.96	6.00	0.75	4	0.625 (63)	4.50	WPL75	ZIF10MS	M12 x 65 mm LG.	M12H1-65VQ	4	1.50	8 LBS.	5 LBS.	300 PSI
	1.5/1 HH	1.96	6.00	0.88	4	0.625	4.50	WPL87	ZIF11MS	M12 x 70 mm LG.	M12H1-70VQ	4	1.50	9 LBS.	6 LBS.	500 PSI
	2/1.5 AH	2.44	7.25	0.75	4	0.750	5.75	WPL75	ZIF20MS	M16 x 70 mm LG.	M16H1-70VQ	4	2.00	11 LBS.	7 LBS.	300 PSI
	20 L	1.38	4.50	0.75	4	0.563	3.28	WPL75	ZIF21MS	M12 x 60 mm LG.	M12H1-60VQ	4	1.00	4 LBS.	3 LBS.	150 PSI
	38 HRM	2.44	7.75	0.88	8	0.750	6.09	WPL87	ZIF38MS	M16 x 75 mm LG.	M16H1-75VQ	8	2.00	15 LBS.	10 LBS.	750 PSI
*	2 AHF	6.07	12.25	1.00	4	0.875	10.25	WPL1.00	ZIF22MS	M20 x 90 mm LG.	M20H1-90VQ	4	- (64)	42 LBS.	24 LBS.	300 PSI
	3/2 AH	3.56	8.50	1.00	4	0.750	7.00	WPL1.00	ZIF30MS	M16 x 85 mm LG.	M16H1-85VQ	4	3.00	20 LBS.	13 LBS.	300 PSI
	3/2 HH	3.56	8.50	1.13	8	0.750	7.00	WPL1.125	ZIF31MS	M16 x 85 mm LG.	M16H1-85VQ	8	3.00	23 LBS.	14 LBS.	500 PSI
	50 L	2.44	7.25	0.75	4	0.750	5.75	WPL75	ZIF25MS	M16 x 75 mm LG.	M16H1-75VQ	4	2.00	11 LBS.	7 LBS.	150 PSI
	50 WBH	3.56	8.50	0.63	4	0.719	6.69	WPL62	ZIF26MS	M16 x 75 mm LG.	M16H1-75VQ	4	3.00	13 LBS.	8 LBS.	300 PSI
	4/3 AH	4.56	11.00	1.00	4	0.875	9.25	WPL1.00	ZIF40MS	M20 x 90 mm LG.	M20H1-90VQ	4	4.00	34 LBS.	22 LBS.	300 PSI
	4/3 HH	4.56	10.00	1.25	8	0.750	8.25	WPL1.25	ZIF41MS	M16 x 90 mm LG.	M16H1-90VQ	8	4.00	35 LBS.	21 LBS.	500 PSI
	4/3 HHP (66)	4.56	10.00	1.25	8	0.750	8.25	WPL1.25	ZIF41MS	M16 x 90 mm LG.	M16H1-90VQ	8	4.00	35 LBS.	21 LBS.	600 PSI
	4/3 HHPX (66)	4.56	10.00	1.25	8	0.750	8.25	WPL1.25	ZIF41MS	M16 x 90 mm LG.	M16H1-90VQ	8	4.00	35 LBS.	21 LBS.	750 PSI
	4/3 SH	4.56	9.00	1.00	8	0.750	7.50	WPL1.00	ZIF42MS	M16 x 85 mm LG.	M16H1-85VQ	8	4.00	23 LBS.	12 LBS.	300 PSI
*	3 AHF	8.09	14.56	1.25	8	0.875	12.75	WPL1.25	ZIF32MS	M20 x 100 mm LG.	M20H1-100VQ	8	- (64)	75 LBS.	39 LBS.	300 PSI
	75 L	4.56	9.00	1.00	4	0.750	7.50	WPL1.00	ZIF43MS	M16 x 80 mm LG.	M16H1-80VQ	4	4.00	23 LBS.	13 LBS.	150 PSI
	75 HRM (64)	4.56	11.00	1.50	8	0.906	9.06	WPL1.50	ZIF75MS	M20 x 110 mm LG.	M20H1-110ZN	8	- (64)	51 LBS.	31 LBS.	750 PSI
	75 WBH	4.56	11.00	0.88	8	0.719	9.25	WPL87	ZIF46MS	M16 x 90 mm LG.	M16H1-90VQ	8	4.00	30 LBS.	19 LBS.	300 PSI
	6/4 AH	6.69	13.25	1.25	4	0.875	11.50	WPL1.25	ZIF60MS	M20 x 100 mm LG.	M20H1-100VQ	4	6.00	62 LBS.	36 LBS.	300 PSI
	6/4 AHP	6.69	14.50	1.50	12	1.000	12.75	WPL1.50	ZIF64MS	M20 x 110 mm LG.	M20H1-110VQ	12	6.00	89 LBS.	51 LBS.	500 PSI
	6/4 AHPP	6.69	14.50	2.00	12	1.000	12.75	WPL2.00	ZIF64MSPP	M20 x 130 mm LG.	M20H1-130VQ	12	6.00	119 LBS.	68 LBS.	1,000 PSI
	6/4 HH	6.69	13.25	1.50	8	0.875	11.50	WPL1.50	ZIF61MS	M20 x 110 mm LG.	M20H1-110VQ	8	6.00	75 LBS.	42 LBS.	500 PSI
#	6/4 S-HH	8.69	13.25	1.50	8	0.875	11.50	WPL1.50	ZIF67MS	M20 x 110 mm LG.	M20H1-110VQ	8	6.00	75 LBS.	31 LBS.	500 PSI
	6/4 SH	6.69	12.00	1.25	12	0.875	10.25	WPL1.25	ZIF62MS	M20 x 100 mm LG.	M20H1-100VQ	12	6.00	51 LBS.	25 LBS.	300 PSI
*	4 AHF	12.31	19.69	1.50	8	1.125	17.25	WPL1.50	ZIF45MS	M24 x 120 mm LG.	M24H1-120VQ	8	- (64)	165 LBS.	75 LBS.	300 PSI
	100 L	6.69	12.00	1.00	4	0.875	10.25	WPL1.00	ZIF65MS	M20 x 90 mm LG.	M20H1-90VQ	4	6.00	41 LBS.	21 LBS.	150 PSI
	100 HRM	4.56	12.50	1.50	8	1.125	10.25	WPL1.50	ZIF44MS	M24 x 120 mm LG.	M24H1-120VQ	8	4.00	66 LBS.	42 LBS.	750 PSI
	100 WBH	6.69	12.75	1.00	8	0.906	11.00	WPL1.00	ZIF71MS	M20 x 100 mm LG.	M20H1-100VQ	8	6.00	46 LBS.	25 LBS.	300 PSI
	100C-GP ANSI 150 (65)	6.69	11.00	1.13	8	0.813	9.49	WPL1.125	ZIF63MSA	3/4 UNC x 4" LG.	U12H1-4"VH	8	6.00	39 LBS.	18 LBS.	200 PSI
	100C-GP AS2129 (65)	6.69	11.00	1.13	8	0.813	9.25	WPL1.125	ZIF63MSB	M20 x 90 mm LG.	M20H1-90VH	8	6.00	39 LBS.	18 LBS.	200 PSI
	100C-GP DIN 2655 (65)	6.69	11.00	1.13	8	0.813	9.45	WPL1.125	ZIF63MSD	M20 x 90 mm LG.	M20H1-90VH	8	6.00	39 LBS.	18 LBS.	200 PSI
	125 MCR, 125 MCU (66)	8.75	13.50	1.25	8	0.875	11.75	WPL1.25	ZIF128MS (67)	M20 x 90 mm LG.	M20H1-90VQ	8	8.00	64 LBS.	28 LBS.	130 PSI
	8/6 AH	8.69	16.00	1.25	8	0.813	14.00	WPL1.25	ZIF80MS	M20 x 110 mm LG.	M20H1-110VQ	8	8.00	91 LBS.	49 LBS.	300 PSI
	8/6 AHP	8.69	17.00	1.75	12	1.250	15.00	WPL1.75	ZIF84MS	M24 x 140 mm LG.	M24H1-140VQ	12	8.00	143 LBS.	76 LBS.	500 PSI
	8/6 AHPP	8.75	17.00	2.50	12	1.063	15.00	WPL2.50	ZIF84MSPP	M24 x 160 mm LG.	M24H1-160VQ	12	8.00	204 LBS.	111 LBS.	1,000 PSI
	8/6 HH	8.69	17.00	1.75	8	1.125	14.75	WPL1.75	ZIF81MS	M24 x 140 mm LG.	M24H1-140VQ	8	8.00	143 LBS.	79 LBS.	500 PSI
	8/6 SH	8.69	14.50	1.25	16	0.875	12.75	WPL1.25	ZIF82MS	M20 x 110 mm LG.	M20H1-110VQ	16	8.00	74 LBS.	34 LBS.	300 PSI
	8/6 R-AH	8.69	17.00	1.25	8	1.000	14.75	WPL1.25	ZIF85MS	M20 x 120 mm LG.	M20H1-120VQ	8	8.00	102 LBS.	57 LBS.	300 PSI
	8/6 XU	8.69	16.00	1.25	8	0.813	14.00	WPL1.25	ZIF90MS	M20 x 110 mm LG.	M20H1-110VQ	8	8.00	91 LBS.	49 LBS.	150 PSI
	6 HP	6.69	14.50	1.50	12	0.875	12.75	WPL1.50	ZIF66MS	M20 x 120 mm LG.	M20H1-120VQ	12	6.00	89 LBS.	52 LBS.	500 PSI
	6 H	6.69	15.00	1.50	8	1.125	12.63	WPL1.50	ZIF68MS	M24 x 120 mm LG.	M24H1-120VQ	8	6.00	96 LBS.	57 LBS.	250 PSI
	6 HPP	6.69	14.50	2.00	12	0.875	12.75	WPL2.00	ZIF69MS	M20 x 130 mm LG.	M20H1-130VQ	12	6.00	119 LBS.	70 LBS.	1,000 PSI
*	6 AHF	15.61	24.25	2.00	12	1.313	21.75	WPL2.00	ZIF70MS	M30 x 140 mm LG.	M30H1-140VQ	12	- (64)	333 LBS.	144 LBS.	300 PSI
	150 L	8.69	14.50	1.25	8	0.750	12.75	WPL1.25	ZIF83MS	M16 x 90 mm LG.	M16H1-90VQ	8	8.00	74 LBS.	36 LBS.	150 PSI
	150 WBH	8.69	15.50	1.38	8	0.906	14.00	WPL1.37	ZIF88MS	M20 x 120 mm LG.	M20H1-120VQ	8	8.00	93 LBS.	48 LBS.	300 PSI
	150 MCR, 150 MCU (61)	8.69	16.00	1.25	12	1.000	14.25	WPL1.25	ZIF150MS	M20 x 95 mm LG. (66)	M20H1-95VQ (66)	12	8.00	91 LBS.	47 LBS.	130 PSI
	10/8 AH	10.88	19.75	1.50	8	1.125	17.50	WPL1.50	ZIF100MS	M24 x 120 mm LG.	M24H1-120VQ	8	10.00	166 LBS.	87 LBS.	300 PSI
	10/8 AHPP	10.88	22.88	3.00	12	1.313	20.00	WPL3.00	ZIF102MS	M30 x 190 mm LG.	M30H1-190VQ	12	10.00	444 LBS.	256 LBS.	1,000 PSI
	10/8 G	10.88	18.00	1.25	8	0.875	16.00	WPL1.25	ZIF101MS	M20 x 120 mm LG.	M20H1-120VQ	8	10.00	115 LBS.	55 LBS.	73 PSI
	10/8 XU, 200 L, 200 M (62)	10.88	19.75	1.25	8	1.125	17.50	WPL1.25	ZIF105MS	M24 x 120 mm LG.	M24H1-120VQ	8	10.00	138 LBS.	73 LBS.	150 PSI
	10/8 M	10.88	19.75	1.50	8	1.125	17.50	WPL1.50	ZIF106MS	M24 x 120 mm LG.	M24H1-120VQ	8	10.00	166 LBS.	87 LBS.	150 PSI
*	8 AHF	18.79	29.13	2.50	16	1.313	26.50	WPL2.50	ZIF87MS	M30 x 160 mm LG.	M30H1-160VQ	16	- (64)	600 LBS.	260 LBS.	300 PSI
	8 STYFC-AHPF	18.13	29.13	3.75	16	1.313 (63)	26.50	WPL3.75	ZIF89MS	M30 x 240 mm LG.	M30H1-240VQ	16	18.00	900 LBS.	410 LBS.	750 PSI

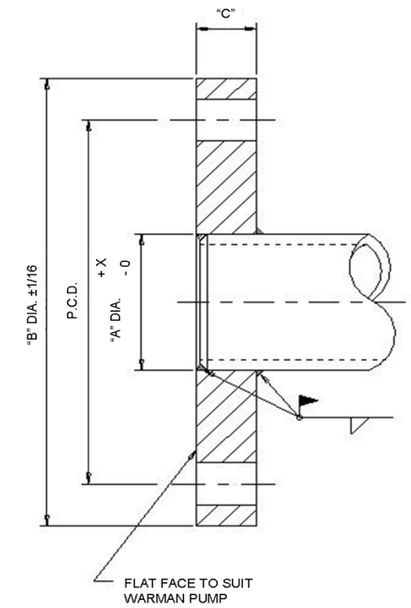

1.) PARTS TO BE MADE FROM ASTM-A-36 OR EQUAL UNLESS OTHERWISE NOTED.
2.) FLAME CUT DIA.'S "A" & "B".
3.) REMOVE ALL BURRS & SHARP EDGES.
4.) ALL DIMENSIONS ARE IN INCHES UNLESS OTHERWISE SPECIFIED.
5.) STAMP PART NO. ON SIDE OF FLANGE USING 5/16 HIGH NUMERALS.
6.) # FLANGE IS CUSTOMIZED PER CUSTOMER REQUIREMENTS.
7.) BOLTING GRADE 5 ASTM A193.
8.) FLANGES WITH NOM. PIPE SIZE LARGER THAN OR EQUAL TO 14", X = 3/16". FLANGES WITH NOM. PIPE SIZE SMALLER THAN 14", X = 1/8".

* "A" = (THROAT BUSH I.D.) + (2)(STD. PIPE WALL) + (1/8")

FOR LIMITS OF UNTOLERANCED DIMENSIONS REFER TO DRG. A4-15895

Copyright © Weir Slurry Group Inc. 2013

Weir Slurry Group Inc. ("the Company") is the owner of the copyright and all confidential information in this drawing. The drawing must not be copied in whole or in part, in any form or by any means, and the information in it must not be disclosed to any person, or used for any purpose other than the specific purpose for which it has been provided, without the prior written consent of the Company.

NO.	DESCRIPTION	BY	DATE	CHK
67	ZIF128MS WAS ZIF125MS FOR 125 MCR AND 125 MCU	JCV	21 APR, 2016	GMG
66	REVISED FASTENER LENGTHS, ADDED SHEET 3, 4/3 HHP, 4/3 HHPX, 125 MCR AND 125 MCU	GMG	MAR. 14, 2016	JCV
65	REVISED FASTENER LENGTHS, ADDED 14/12 AHPP	MLC	APRIL 21, 2015	LFB
64	REVISED NOMINAL PIPE SIZES, ADDED 75 HRM	PO	JUNE 05, 2013	LFB
63	HOLE SIZE COLUMN WAS 2 DECIMAL PLACES, NOW 3	LFB	MAR. 06, 2013	AGS

REVISIONS

APP.	
CHECK	RT
DRN.	JCV
DATE	MAY 22, 2000
SCALE	

PRODUCT: WARMAN PUMP

TITLE: INTAKE SLIP-ON FLANGE DETAIL

WEIR MINERALS

WEIR MINERALS NORTH AMERICA
DESIGN CENTRE OF ORIGIN
MADISON

DRAWING NO. A2-110-0-62413
SHEET 1 OF 3 (66)

REV. 67

	FLANGE DATA									BOLT DATA			PIPE	FLANGE WT.		PUMP DATA
	PUMP SIZE	"A"	"B"	"C"	HOLES NO.	HOLES SIZE	P.C.D.	RAW MATERIAL	WARMAN PART NO.	BOLT SIZE	WARMAN PART NO.	QTY.	NOM. SIZE	FAB.	FINISH	PRESSURE
	8 MF, 200 MF	15.61	24.63	1.63	12	1.313 63	21.75	WPL1.62	ZIF203MS	M30 x 150 mm LG.	M30H1-150VQ	12	-	279 LBS.	124 LBS.	250 PSI
	200 EMSM	14.13	18.81	1.25	16	1.063	16.75	WPL1.25	ZIF214MS	M24 x 70 mm LG.	M24H2-70VW	16	14.00	125 LBS.	38 LBS.	150 PSI
*	200 E-MF	16.13	24.63	1.63	12	1.313	21.73	WPL1.62	ZIF82099	M30 x 150 mm LG.	M30H1-150VQ	12	16.00	279 LBS.	118 LBS.	250 PSI
	200 WBH	10.88	20.63	1.75	8	1.313	18.50	WPL1.75	ZIF107MS	M30 x 140 mm LG.	M30H1-140VQ	8	10.00	211 LBS.	114 LBS.	300 PSI
*	200 MCR, 200 MCU 61 65	10.88	21.00	1.38	12	1.125	18.75	WPL1.37	ZIF204MS	M24 x 110 mm LG.	M24H1-110VQ	12	10.00	172 LBS.	94 LBS.	130 PSI
	12/10 AH	12.88	20.75	1.75	8	1.000	18.50	WPL1.75	ZIF121MS	M20 x 120 mm LG.	M20H1-120VQ	8	12.00	213 LBS.	100 LBS.	300 PSI
#	12/10 ST-AH	14.13	20.75	1.75	8	1.000	18.50	WPL1.75	ZIF82101	M20 x 120 mm LG.	M20H1-120VQ	8	12.00	213 LBS.	87 LBS.	300 PSI
	12/10 AHP 65	12.88	26.00	2.50	12	1.500	22.63	WPL2.50	ZIF122MS	M30 x 180 mm LG.	M30H1-180VQ	12	12.00	478 LBS.	268 LBS.	500 PSI
	12/10 AHPP	12.88	26.00	3.50	12	1.500	22.63	WPL3.50	ZIF123MS	M30 x 200 mm LG.	M30H1-200VQ	12	12.00	670 LBS.	376 LBS.	1,000 PSI
	12/10 G	12.88	20.75	1.25	12	0.875	18.50	WPL1.25	ZIF124MS	M20 x 120 mm LG.	M20H1-120VQ	12	12.00	152 LBS.	71 LBS.	73 PSI
#	12/10 XU, 250 L 62	12.88	21.75	1.38	8	1.250	19.50	WPL1.37	ZIF125MS	M24 x 130 mm LG.	M24H1-130VQ	8	12.00	184 LBS.	90 LBS.	150 PSI
	10 AHF	21.78	31.31	2.50	16	1.313	28.50	WPL2.50	ZIF103MS	M30 x 150 mm LG.	M30H1-150VQ	16	- 64	694 LBS.	266 LBS.	300 PSI
	10 MF	17.90	26.50	2.00	12	1.313	24.00	WPL2.00	ZIF86MS	M30 x 150 mm LG.	M30H1-150VQ	12	- 64	397 LBS.	161 LBS.	200 PSI
	250 WBH	12.88	24.00	2.25	12	1.063	21.66	WPL2.25	ZIF128MS	M24 x 160 mm LG.	M24H1-160VQ	12	12.00	367 LBS.	198 LBS.	300 PSI
	250 MCR, 250 MCU 61	12.88	23.50	1.50	16	1.125	21.25	WPL1.50	ZIF250MS	M24 x 120 mm LG.	M24H1-120VQ	16	12.00	234 LBS.	122 LBS.	130 PSI
*	14/12 AH	14.13	23.00	2.00	12	1.000	20.50	WPL2.00	ZIF140MS	M20 x 130 mm LG.	M20H1-130VQ	12	14.00	299 LBS.	141 LBS.	300 PSI
*	14/12 AHP	14.13	26.38	2.50	12	1.625	22.84	WPL2.50	ZIF141MS	M36 x 200 mm LG.	M36H1-200VQ	12	14.00	492 LBS.	258 LBS.	500 PSI
	14/12 AHPP 65	14.13	28.75	4.00	12	1.625	25.59	WPL4.00	ZIF146MS	M36 x 230 mm LG.	M36H1-230VQ	12	0.00	936 LBS.	529 LBS.	0 PSI
	14/12 XU	14.13	21.00	1.38	12	1.125	18.75	WPL1.37	ZIF144MS	M24 x 120 mm LG.	M24H1-120VQ	12	14.00	172 LBS.	69 LBS.	150 PSI
	12 AHF	24.14	35.00	3.00	16	1.313	31.88	WPL3.00	ZIF126MS	M30 x 180 mm LG.	M30H1-180VQ	16	24.00	1,040 LBS.	410 LBS.	300 PSI
	300 L	14.13	22.00	1.38	12	1.000	19.69	WPL1.37	ZIF300MS	M20 x 110 mm LG.	M20H1-110VQ	12	14.00	188 LBS.	83 LBS.	150 PSI
	300 LF	21.94	31.25	1.75	16	1.313	28.50	WPL1.75	ZIF301MS	M30 x 130 mm LG.	M30H1-130VQ	16	- 64	484 LBS.	182 LBS.	150 PSI
	300 LFP	20.13	29.94	2.75	16	1.313	26.77	WPL2.75	ZIF300MSFP	M30 x 160 mm LG.	M30H1-160VQ	16	20.00	698 LBS.	283 LBS.	400 PSI
*	300 SLPF TO SLP HYBRID	14.66	29.94	2.50	16	1.313	26.75	WPL2.50	ZIF302MS	M30 x 150 mm LG.	M30H1-150VQ	16	- 64	634 LBS.	363 LBS.	400 PSI
	300 WBH	14.13	27.16	2.50	12	1.313	24.21	WPL2.50	ZIF145MS	M30 x 170 mm LG.	M30H1-170VQ	12	14.00	522 LBS.	287 LBS.	300 PSI
*	300 MCR	14.13	27.50	1.75	20	1.250	25.00	WPL1.75	ZIF303MS	M30 x 140 mm LG.	M30H1-140VQ	20	14.00	375 LBS.	204 LBS.	130 PSI
	16/14 AH 65	16.13	27.75	2.50	8	1.375	25.25	WPL2.50	ZIF160MS	M30 x 160 mm LG.	M30H1-160VQ	8	16.00	545 LBS.	275 LBS.	300 PSI
	16/14 AHP 65	16.13	30.88	3.00	12	1.625	26.75	WPL3.00	ZIF161MS	M36 x 210 mm LG.	M36H1-210VQ	12	16.00	809 LBS.	441 LBS.	500 PSI
	16/14 TU-AHPP	17.99	31.91	4.25	12	1.650	28.35	WPL4.25	ZIF162MS	M36 x 240 mm LG.	M36H1-240VQ	12	18.00	1,224 LBS.	625 LBS.	1,000 PSI
	14 AHF 65	26.24	40.00	3.25	16	1.875	35.81	WPL3.25	ZIF142MS	M42 x 210 mm LG.	M42H1-210VQ	16	26.00	1,472 LBS.	618 LBS.	300 PSI
	14 AHFP	26.24	40.00	4.25	16	1.875	35.81	WPL4.25	ZIF143MS	M42 x 270 mm LG.	M42H1-270VQ	16	26.00	1,924 LBS.	808 LBS.	500 PSI
	350 L	16.13	25.25	1.50	12	1.000	22.81	WPL1.50	ZIF350MS	M20 x 110 mm LG.	M20H1-110VQ	12	16.00	271 LBS.	122 LBS.	150 PSI
#	350 LF	24.14	33.50	2.00	16	1.313	30.75	WPL2.00	ZIF351MS	M30 x 140 mm LG.	M30H1-140VQ	16	24.00	635 LBS.	228 LBS.	150 PSI
*	350 MCR, 350 MCU 61 65	16.13	29.50	2.00	20	1.375	27.25	WPL2.00	ZIF352MS	M30 x 150 mm LG.	M30H1-150VQ	20	16.00	493 LBS.	254 LBS.	130 PSI
*	18/16 HGH	18.13	27.75	1.75	16	1.000	25.25	WPL1.75	ZIF180MS	M20 x 150 mm LG.	M20H1-150VQ	16	18.00	381 LBS.	165 LBS.	73 PSI
	400 L	18.13	28.38	1.75	12	1.313	25.56	WPL1.75	ZIF400MS	M30 x 150 mm LG.	M30H1-150VQ	12	18.00	399 LBS.	177 LBS.	150 PSI
*	400 MCR 65	18.13	32.00	2.50	12	1.375	29.50	WPL2.50	ZIF401MS	M30 x 170 mm LG.	M30H1-170VQ	12	18.00	724 LBS.	374 LBS.	180 PSI
	20/18 AH	20.13	35.50	2.75	12	1.625	31.50	WPL2.75	ZIF200MS	M36 x 200 mm LG.	M36H1-200VQ	12	20.00	981 LBS.	503 LBS.	200 PSI
	20/18 AHP 65	20.13	35.50	3.75	12	1.625	31.50	WPL3.75	ZIF201MS	M36 x 230 mm LG.	M36H1-230VQ	12	20.00	1,337 LBS.	686 LBS.	500 PSI
	450 L	20.13	30.38	1.75	12	1.313	27.56	WPL1.75	ZIF450MS	M30 x 150 mm LG.	M30H1-150VQ	12	20.00	457 LBS.	193 LBS.	150 PSI
	450 MCR, 450 MCU 61 65	20.13	34.25	2.50	12	1.625	31.50	WPL2.50	ZIF451MS	M36 x 190 mm LG.	M36H1-190VQ	12	20.00	830 LBS.	409 LBS.	180 PSI
	20/20 D	21.31	30.00	2.50	12	1.188	27.50	WPL2.50	ZIF202MS	M24 x 170 mm LG.	M24H1-170VQ	12	- 64	637 LBS.	238 LBS.	44 PSI
	500 L	22.25	34.50	2.00	12	1.500	30.72	WPL2.00	ZIF500MS	M36 x 180 mm LG.	M36H1-180VQ	12	22.00	674 LBS.	297 LBS.	150 PSI
	500 HTP	26.25	41.75	4.75	12	1.875	37.81	WPL4.75	ZIF501MS	M42 x 270 mm LG.	M42H1-270VQ	12	26.00	2,343 LBS.	1,068 LBS.	580 PSI
	550 L	26.25	38.38	2.25	12	1.500	34.66	WPL2.25	ZIF550MS	M36 x 190 mm LG.	M36H1-190VQ	12	26.00	938 LBS.	378 LBS.	150 PSI
*	550 SHD	27.13	41.75	3.50	12	1.875	37.81	WPL3.50	ZIF551MS	M42 x 230 mm LG.	M42H1-230VQ	12	- 64	1,727 LBS.	751 LBS.	300 PSI
	550 MCR, 550 MCU 61 65	26.25	41.75	2.50	16	1.625	38.50	WPL2.50	ZIF552MS	M36 x 190 mm LG.	M36H1-190VQ	16	26.00	1,233 LBS.	562 LBS.	130 PSI
	600 GSL	28.68	35.25	1.50	12	1.313	32.69	WPL1.50	ZIF600MS	M24 x 150 mm LG.	M24H1-150VQ	12	- 64	527 LBS.	133 LBS.	82 PSI
	600 HTP	30.25	46.88	5.25	12	2.000	42.72	WPL5.25	ZIF601MS	M48 x 310 mm LG.	M48H1-310VQ	12	30.00	3,265 LBS.	1,440 LBS.	580 PSI
	650 L	32.25	46.25	3.00	12	1.750	43.00	WPL3.00	ZIF650MS	M36 x 210 mm LG.	M36H1-210VQ	12	32.00	1,816 LBS.	708 LBS.	150 PSI
	650 LP 61	32.25	46.88	4.50	12	1.750	43.00	WPL4.50	ZIF652MS	M42 x 260 mm LG.	M42H1-260VQ	12	32.00	2,798 LBS.	1,121 LBS.	362 PSI
*	650 LP	33.38	46.88	4.25	12	1.750	43.00	WPL4.25	ZIF81493	M42 x 260 mm LG.	M42H1-260VQ	12	32.00	2,643 LBS.	989 LBS.	362 PSI
	650 MCR, 650 MCU 61	30.38	48.44	3.50	16	1.688	42.72	WPL3.50	ZIF651MS	M36 x 240 mm LG.	M36H1-240VQ	16	30.00	2,324 LBS.	1,072 LBS.	130 PSI
	700 GSL	32.62	40.00	2.00	12	1.563 63	37.00	WPL2.00	ZIF700MS	M36 x 160 mm LG.	M36H1-160VQ	12	- 64	906 LBS.	225 LBS.	82 PSI

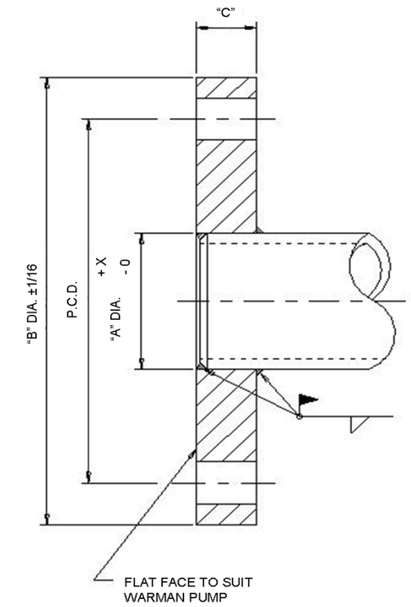

1.) PARTS TO BE MADE FROM ASTM-A-36 OR EQUAL UNLESS OTHERWISE NOTED.
2.) FLAME CUT DIA.'S "A" & "B".
3.) REMOVE ALL BURRS & SHARP EDGES.
4.) ALL DIMENSIONS ARE IN INCHES UNLESS OTHERWISE SPECIFIED.
5.) STAMP PART NO. ON SIDE OF FLANGE USING 5/16 HIGH NUMERALS.
6.) # FLANGE IS CUSTOMIZED PER CUSTOMER REQUIREMENTS.
7.) BOLTING GRADE 5 ASTM A193.
8.) FLANGES WITH NOM. PIPE SIZE LARGER THAN OR EQUAL TO 14", X = 3/16". FLANGES WITH NOM. PIPE SIZE SMALLER THAN 14", X = 1/8".

* "A" = (THROAT BUSH I.D.) + (2)(STD. PIPE WALL) + (1/8")

FOR LIMITS OF UNTOLERANCED DIMENSIONS REFER TO DRG. A4-15895

Copyright © Weir Slurry Group Inc. 2013

Weir Slurry Group Inc. ("the Company") is the owner of the copyright and all confidential information in this drawing. The drawing must not be copied in whole or in part, in any form or by any means, and the information in it must not be disclosed to any person, or used for any purpose other than the specific purpose for which it has been provided, without the prior written consent of the Company.

NO.	DESCRIPTION	BY	DATE	CHK
67	ZIF128MS WAS ZIF125MS FOR 125 MCR AND 125 MCU	JCV	21 APR, 2016	GMG
66	REVISED FASTENER LENGTHS, ADDED SHEET 3, 4/3 HHP, 4/3 HHPX, 125 MCR AND 125 MCU	GMG	MAR. 14, 2016	JCV
65	REVISED FASTENER LENGTHS, ADDED 14/12 AHPP	MLC	APRIL 21, 2015	LFB
64	REVISED NOMINAL PIPE SIZES, ADDED 75 HRM	PO	JUNE 05, 2013	LFB
63	HOLE SIZE COLUMN WAS 2 DECIMAL PLACES, NOW 3	LFB	MAR. 06, 2013	AGS

REVISIONS

APP.	
CHECK	RT
DRN.	JCV
DATE	MAY 22, 2000
SCALE	

PRODUCT: WARMAN PUMP

TITLE: INTAKE SLIP-ON FLANGE DETAIL

WEIR MINERALS

WEIR MINERALS NORTH AMERICA
DESIGN CENTRE OF ORIGIN
MADISON

DRAWING NO. A2-110-0-62413
SHEET 2 OF 3 66

REV. 67

	FLANGE DATA									BOLT DATA			PIPE	FLANGE WT.		PUMP DATA
	PUMP SIZE	"A"	"B"	"C"	HOLES NO.	HOLES SIZE	P.C.D.	RAW MATERIAL	WARMAN PART NO.	BOLT SIZE	WARMAN PART NO.	QTY.	NOM. SIZE	FAB.	FINISH	PRESSURE
	750 MCR, 750 MCU 61 65	36.38	56.88	3.25	12	2.438 63	51.50	WPL3.25	ZIF750MS	M60 x 280 mm LG.	M60H1-280VQ	12	36.00	2,975 LBS.	1,329 LBS.	130 PSI
	800 GSL	36.56	46.06	2.00	12	1.813	42.52	WPL2.00	ZIF800MS	M42 x 180 mm LG.	M42H1-180VQ	12	- 64	1,201 LBS.	332 LBS.	82 PSI
*	1000 GSL 65	48.37	60.25	2.75	12	2.375 63	55.91	WPL2.75	ZIF1000MS	M56 x 230 mm LG.	M56H1-230VQ	12	- 64	2,825 LBS.	747 LBS.	82 PSI

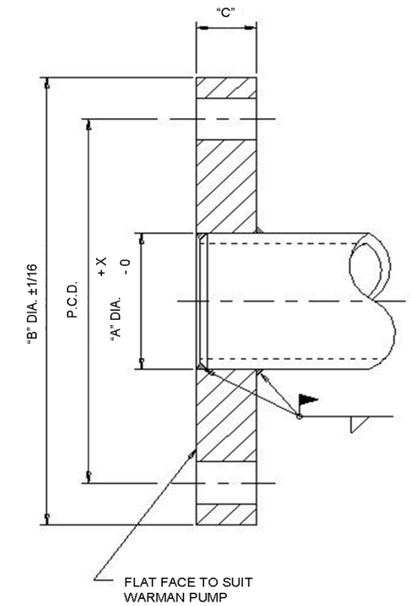

1.) PARTS TO BE MADE FROM ASTM-A-36 OR EQUAL UNLESS OTHERWISE NOTED.
2.) FLAME CUT DIA.'S "A" & "B".
3.) REMOVE ALL BURRS & SHARP EDGES.
4.) ALL DIMENSIONS ARE IN INCHES UNLESS OTHERWISE SPECIFIED.
5.) STAMP PART NO. ON SIDE OF FLANGE USING 5/16 HIGH NUMERALS.
6.) # FLANGE IS CUSTOMIZED PER CUSTOMER REQUIREMENTS.
7.) BOLTING GRADE 5 ASTM A193.
8.) FLANGES WITH NOM. PIPE SIZE LARGER THAN OR EQUAL TO 14", X = 3/16". FLANGES WITH NOM. PIPE SIZE SMALLER THAN 14", X = 1/8".

* "A" = (THROAT BUSH I.D.) + (2)(STD. PIPE WALL) + (1/8")

FOR LIMITS OF UNTOLERANCED DIMENSIONS REFER TO DRG. A4-15895

Copyright © Weir Slurry Group Inc. 2013

Weir Slurry Group Inc. ("the Company") is the owner of the copyright and all confidential information in this drawing. The drawing must not be copied in whole or in part, in any form or by any means, and the information in it must not be disclosed to any person, or used for any purpose other than the specific purpose for which it has been provided, without the prior written consent of the Company.

NO.	DESCRIPTION	BY	DATE	CHK
67	ZIF128MS WAS ZIF125MS FOR 125 MCR AND 125 MCU	JCV	21 APR, 2016	GMG
66	REVISED FASTENER LENGTHS, ADDED SHEET 3, 4/3 HHP, 4/3 HHPX, 125 MCR AND 125 MCU	GMG	MAR. 14, 2016	JCV
65	REVISED FASTENER LENGTHS, ADDED 14/12 AHPP	MLC	APRIL 21, 2015	LFB
64	REVISED NOMINAL PIPE SIZES, ADDED 75 HRM	PO	JUNE 05, 2013	LFB
63	HOLE SIZE COLUMN WAS 2 DECIMAL PLACES, NOW 3	LFB	MAR. 06, 2013	AGS

REVISIONS

APP.	
CHECK	RT
DRN.	JCV
DATE	MAY 22, 2000
SCALE	

PRODUCT: WARMAN PUMP

TITLE: INTAKE SLIP-ON FLANGE DETAIL

WEIR MINERALS

WEIR MINERALS NORTH AMERICA
DESIGN CENTRE OF ORIGIN
MADISON

DRAWING NO. A2-110-0-62413
SHEET 3 OF 3 66

REV. 67