NAME	DATE	TIME (HRS)

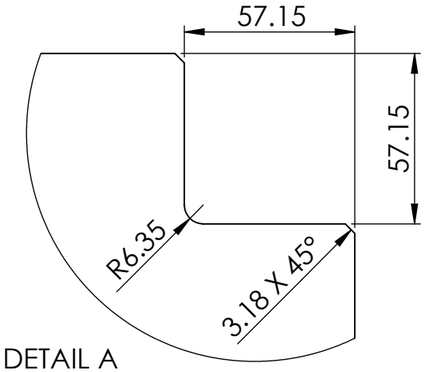

DETAIL A
SCALE 1 : 2

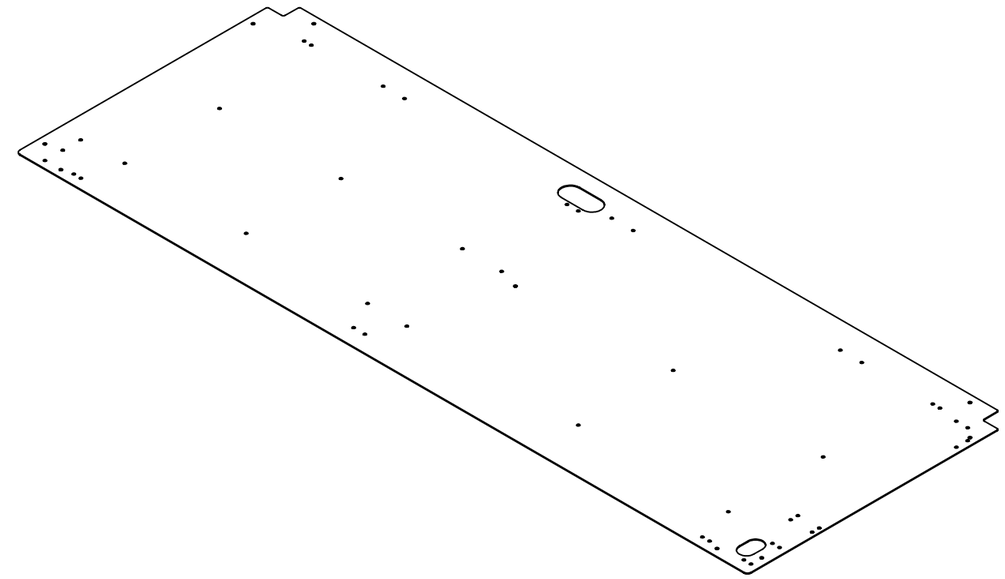

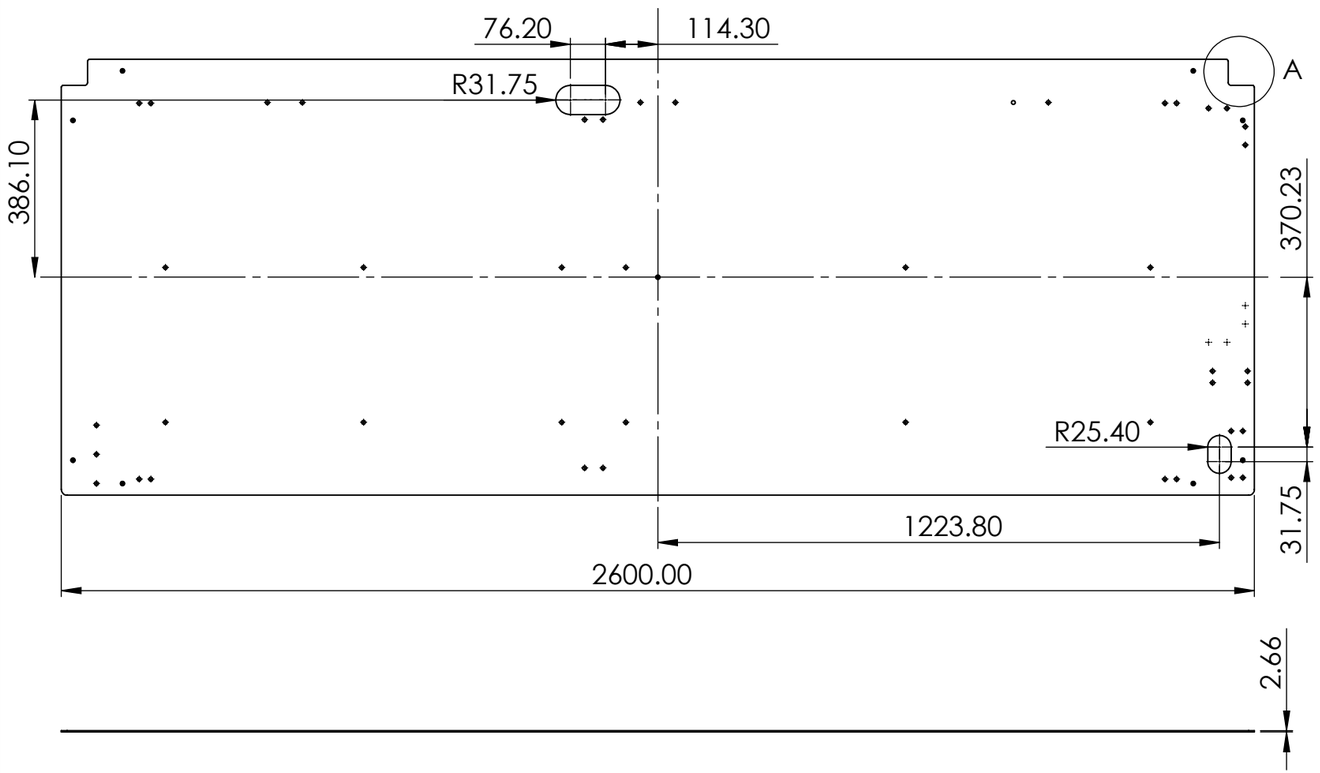

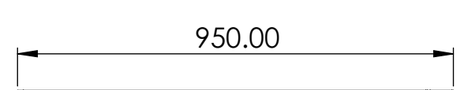

MDM001-TRN-200-003

PAG. 1 de 3

MEDIDA ESPECIAL

ALL TECHNICAL DATA DISCLOSED HERE IS PROPERTY OF **TAKATA** SEAT BELTS INC. AND SHALL NOT BE USED BY ANY OTHER MANUFACTURER, PROCUREMENT OR DISCLOSURE WITHOUT WRITTEN PERMISSION OF THE OWNER

AUTHORIZE	TALLER	QUALITY

NOTES:

REV	DESCRIPTION	DATE	APPROVED

REVIEWS

TOTAL OF PIECES: 1 Pza.

ANG. PROF

UNLESS OTHERWISE SPECIFIED

TOLERANCES DIMENSIONS: ISO 2768-1 mK-E ASME Y14.5M-1994

MM	INCHES	ANGLES
+.1 -.1	+.004 -.004	+1° -1°

MATERIAL: Inox. Cal. 12

SURFACE TREATMENT: N.A.

HARDNESS: N.A.

TAKATA

APPROVALS		DATE
DESIGNER	LGG	05-Apr-19
REVIEW	JEC	05-Apr-19

TAKATA MONTERREY TECHNICAL CENTER

MODEL NAME	MDM001-TRN	SERIES No	M2019-067
MACHINE NAME	Dobladora Manual		
PART NUMBER	MDM001-TRN-200-003		
SIZE B	PART NAME MDM001-TRN-200-003		REV. A
ESCALE: 1:20		DRAWING IN MILLIMETERS	

TKH-MTC-MF-FM-0016-004

NAME	DATE	TIME (HRS)

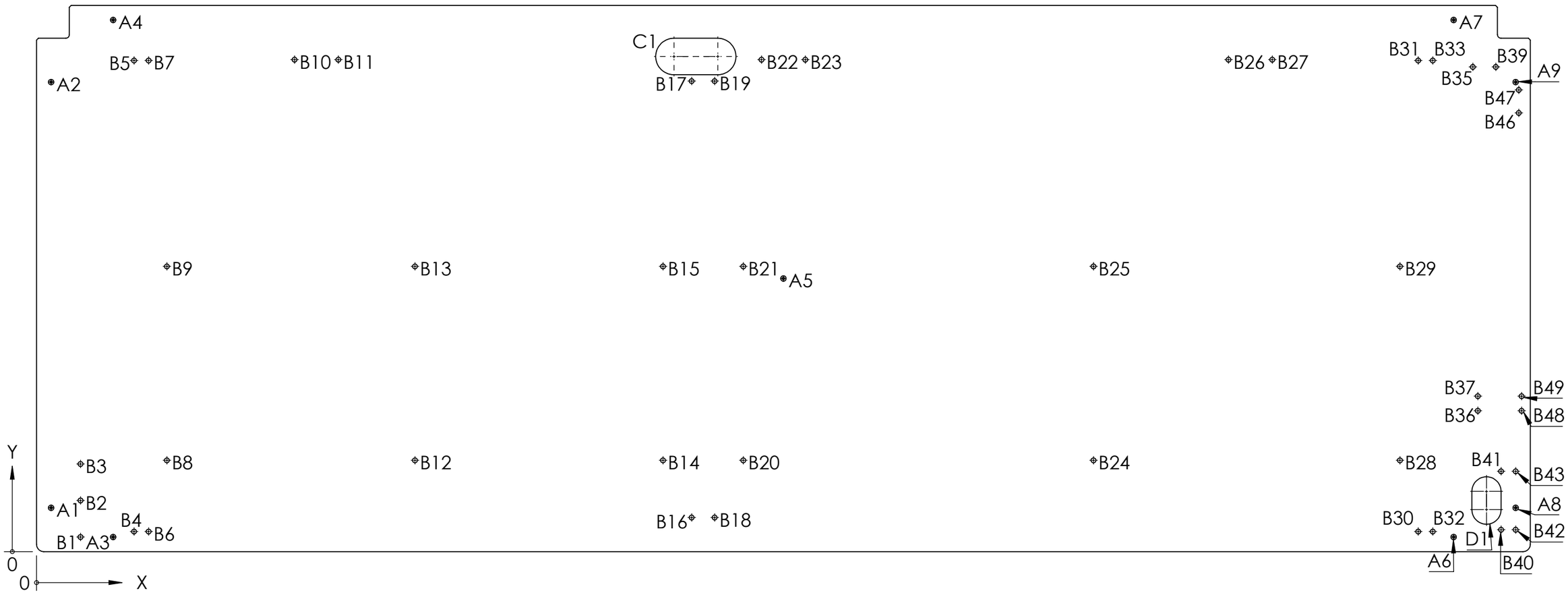

MDM001-TRN-200-003

PAG. 2 de 3

MEDIDA ESPECIAL

ALL TECHNICAL DATA DISCLOSED HERE IS PROPERTY OF **TAKATA** SEAT BELTS INC. AND SHALL NOT BE USED BY ANY OTHER MANUFACTURER, PROCUREMENT OR DISCLOSURE WITHOUT WRITTEN PERMISSION OF THE OWNER

AUTHORIZE	TALLER	QUALITY

NOTES:

REV	DESCRIPTION	DATE	APPROVED

REVIEWS

TOTAL OF PIECES: 1 Pza.

ANG. PROF

UNLESS OTHERWISE SPECIFIED

TOLERANCES DIMENSIONS: ISO 2768-1 mK-E ASME Y14.5M-1994

MM	INCHES	ANGLES
+.1 -.1	+.004 -.004	+1° -1°

MATERIAL: Inox. Cal. 12

SURFACE TREATMENT: N.A.

HARDNESS: N.A.

TAKATA

APPROVALS		DATE
DESIGNER	LGG	05-Apr-19
REVIEW	JEC	05-Apr-19

TAKATA MONTERREY TECHNICAL CENTER

MODEL NAME	MDM001-TRN	SERIES No	M2019-067
MACHINE NAME	Dobladora Manual		
PART NUMBER	MDM001-TRN-200-003		
SIZE B	PART NAME MDM001-TRN-200-003		REV. A
ESCALE: 1:20		DRAWING IN MILLIMETERS	

NAME	DATE	TIME (HRS)

TAG	X LOC	Y LOC	SIZE
A1	25.40	76.20	∅ 4.30 THRU ALL ∨ ∅ 9.40 X 90°
A2	25.40	816.65	
A3	133.35	25.40	
A4	133.35	924.60	
A5	1300	475	
A6	2466.65	25.40	
A7	2466.65	924.60	
A8	2574.60	76.20	
A9	2574.60	816.65	
B1	76.56	25.40	∅ 8.40 THRU ALL
B2	76.56	88.90	
B3	76.56	152.40	
B4	169.70	34.93	
B5	169.70	854.08	
B6	195.10	34.93	
B7	195.10	854.08	
B8	226.85	158.75	
B9	226.85	496.05	
B10	449.10	855.55	
B11	525.30	855.55	
B12	658.65	158.75	
B13	658.65	496.05	
B14	1090.45	158.75	
B15	1090.45	496.05	
B16	1140.30	59.30	
B17	1140.30	818.30	

TAG	X LOC	Y LOC	SIZE
B18	1180.30	59.30	∅ 8.40 THRU ALL
B19	1180.30	818.30	
B20	1230.15	158.75	
B21	1230.15	496.05	
B22	1261.90	855.55	
B23	1338.10	855.55	
B24	1839.75	158.75	
B25	1839.75	496.05	
B26	2074.70	855.55	
B27	2150.90	855.55	
B28	2373.15	158.75	
B29	2373.15	496.05	
B30	2404.90	34.93	
B31	2404.90	854.08	
B32	2430.30	34.93	
B33	2430.30	854.08	
B35	2500	842.95	
B36	2508.72	244.94	
B37	2508.72	270.34	
B39	2540	842.95	
B40	2549.20	38.10	
B41	2549.20	139.70	
B42	2574.60	38.10	
B43	2574.60	139.70	
B46	2580	762.95	
B47	2580	802.95	
B48	2584.92	244.94	
B49	2584.92	270.34	
C1	1147.60	861.10	0.00 X 0.00
D1	2523.80	88.90	0.00 X 0.00

MDM001-TRN-200-003

PAG. 3 de 3

MEDIDA ESPECIAL

ALL TECHNICAL DATA DISCLOSED HERE IS PROPERTY OF **TAKATA** SEAT BELTS INC. AND SHALL NOT BE USED BY ANY OTHER MANUFACTURER, PROCUREMENT OR DISCLOSURE WITHOUT WRITTEN PERMISSION OF THE OWNER

AUTHORIZE	TALLER	QUALITY

NOTES:

TOTAL OF PIECES	1 Pza.
ANG. PROF	

REV	DESCRIPTION	DATE	APPROVED

REVIEWS

UNLESS OTHERWISE SPECIFIED

TOLERANCES DIMENSIONS	ISO 2768-1 mK-E ASME Y14.5M-1994	
MM	INCHES	ANGLES
+.1 -.1	+.004 -.004	+1° -1°

MATERIAL:	Inox. Cal. 12
SURFACE TREATMENT	N.A.
HARDNESS	N.A.

TAKATA

APPROVALS		DATE
DESIGNER	LGG	05-Apr-19
REVIEW	JEC	05-Apr-19

TAKATA MONTERREY TECHNICAL CENTER

MODEL NAME	MDM001-TRN	SERIES No	M2019-067
MACHINE NAME	Dobladora Manual		
PART NUMBER	MDM001-TRN-200-003		
SIZE B	PART NAME MDM001-TRN-200-003		REV. A
ESCALE: 1:20		DRAWING IN MILLIMETERS	

TKH-MTC-MF-FM-0016-004