NUM	X	Y	Z	HOLE SIZE

REV	CHANGE	NAME	CHK	DATE
001	ADDED MISSING WEAR GROOVE TO PIN	CM	MC	10/06/16

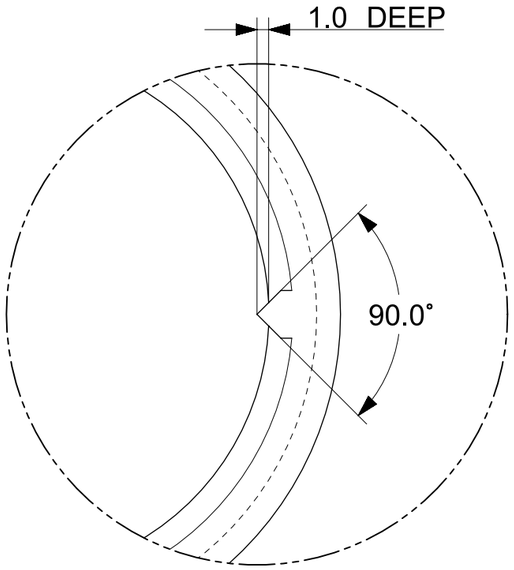

DETAIL A
SCALE 2:1

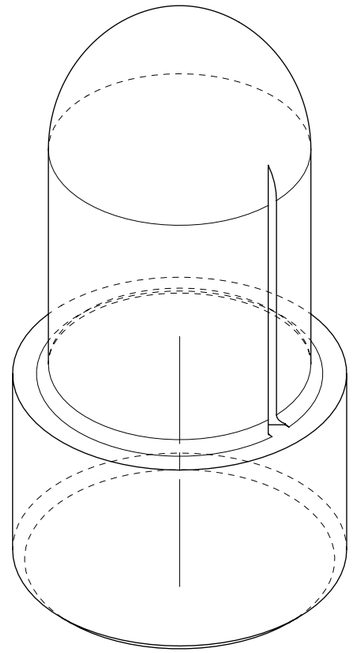

MATERIAL: AISI A2 TOOL STEEL
STK: 2 1/2" X 115MM

NOTE:
ALL MACHINED SURFACES TO BE FLAT, PARALLEL AND PERPENDICULAR TO WITHIN 0.015 T.I.R TO DATUMS A & B AND CONCENTRIC TO WITHIN 0.03 T.I.R.

HARDEN AND TEMPER
Rc 58-62 / 0.5MM DEEP

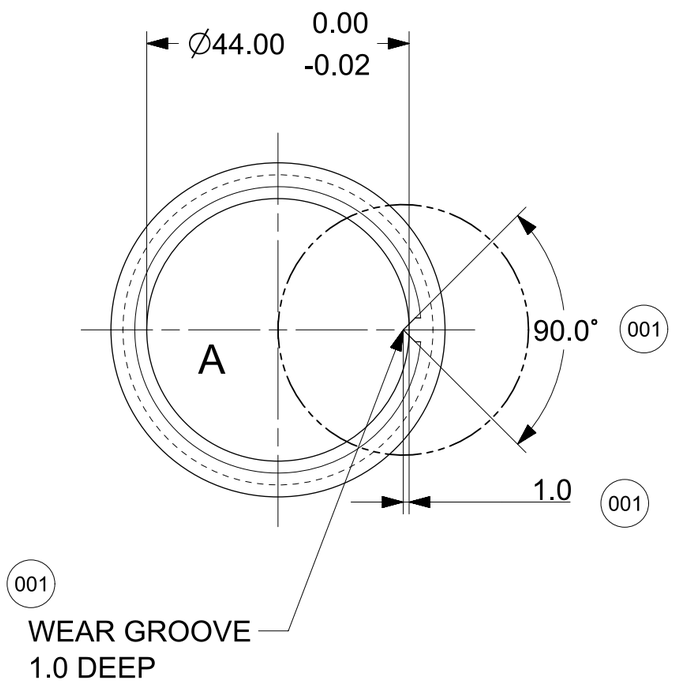

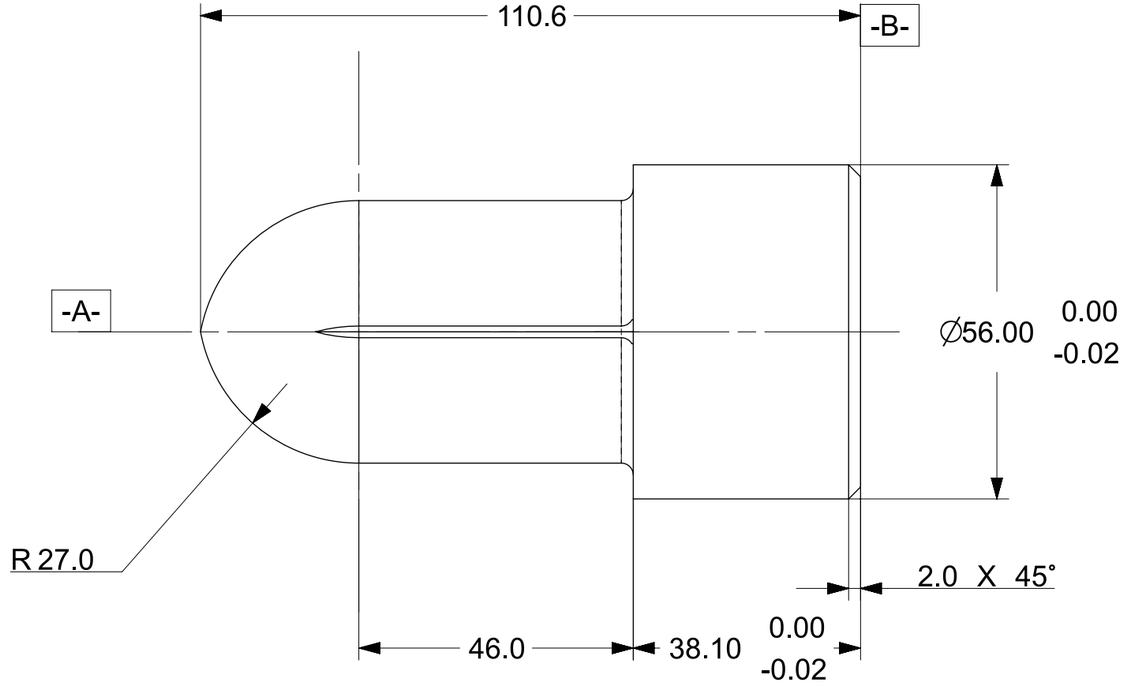

THIS DRAWING MAY USE BOTH INCH AND METRIC UNITS OF MEASUREMENT
(* INDICATES INCH DIMENSIONS)

MAXIMUM ALLOWANCE ROUGHNESS OF ALL METRIC
1 PLACE mm FINISH DIMENSIONS TO BE 3.2 MICRONS
2 PLACE mm FINISH DIMENSIONS TO BE 1.6 MICRONS
3 PLACE mm FINISH DIMENSIONS TO BE 0.5 MICRONS
ALL GROUND SURFACES TO BE 0.4 MICRONS.
METRIC - EXCEPT AS NOTED TOLERANCES SHALL BE:
1 PLACE MACHINING ±0.3
1 PLACE FABRICATION ±1.5
2 PLACE ±0.08 BETWEEN MACHINED SURFACES
±0.03 BETWEEN SINGLE DOWEL AND A HEEL SURFACE
±0.03 BETWEEN DOWELS IN THE SAME PLANE
±0.10 BETWEEN DOWELS IN DIFFERENT PLANES
±0.13 TO SCREW HOLES, NON ACCUMULATIVE
ALL ⊘ SURFACES MUST BE FINISHED EXCEPT FOR COLD DRAWN SUFACES.

WELDMENTS.
ALL WELD FILLETS TO BE 1/4 INCH.
ALL "V" GROOVES TO BE 90 EXCEPT AS SHOWN.
ADD VENT HOLES IN ALL WELDMENTS WHERE TRAPPED AIR IS A POSSIBILITY, I.E. TUBING CAPPED AT BOTH ENDS, BOXED FORMS ETC.
SPOTFACE SCREW AND / OR BOLT HEAD AND / OR WASHERS IS INFRINGED UPON BY WELD BEADS.

ALL EDGES OF PART CONTACT SURFACES ON LOCATING BLOCKS AND FINGERS TO HAVE .12 INCH / 3.00 mm AFTER SPOTTING.

BUILD VENDOR TO BE RESPONSIBLE FOR ACCURACY OF STANDARD PRODUCTS AFTER ALTERATION.

DOWEL HOLE TOLERANCES
FOR PRESS FIT USE H6
FOR SLIP FIT USE F7

DOWEL TOLERANCE
m6

MARK IDENTIFICATION AND MATERIAL NUMBERS ON DETAILS.
PAINT IDENTIFICATION NUMBERS ON STRUCTURAL WORK.

3rd ANGLE PROJECTION

DO NOT SCALE DRAWING

	SAFETY ORANGE
	PAINT
	NO PAINT
X	BLACK OXIDE

JOB#15142

SHT 1 OF 1 SHTS		SHOWN ON: A-DT1-RN231
DES BY JACOBS	DET BY JACOBS	TITLE: RETAINING PIN
CHK BY JACOBS	DATE 06/01/16	DRAWING NO. OR TOOL NO. A-DT1-RN231-D13
SCALE NONE	DIVISION	AUTOMOTIVE
	PLANT	METALSA LV APODACA
	LOCATION / ACTIVITY	APODACA, N.L. MEXICO

THE PASLIN COMPANY