NAME	DATE	TIME (HRS)

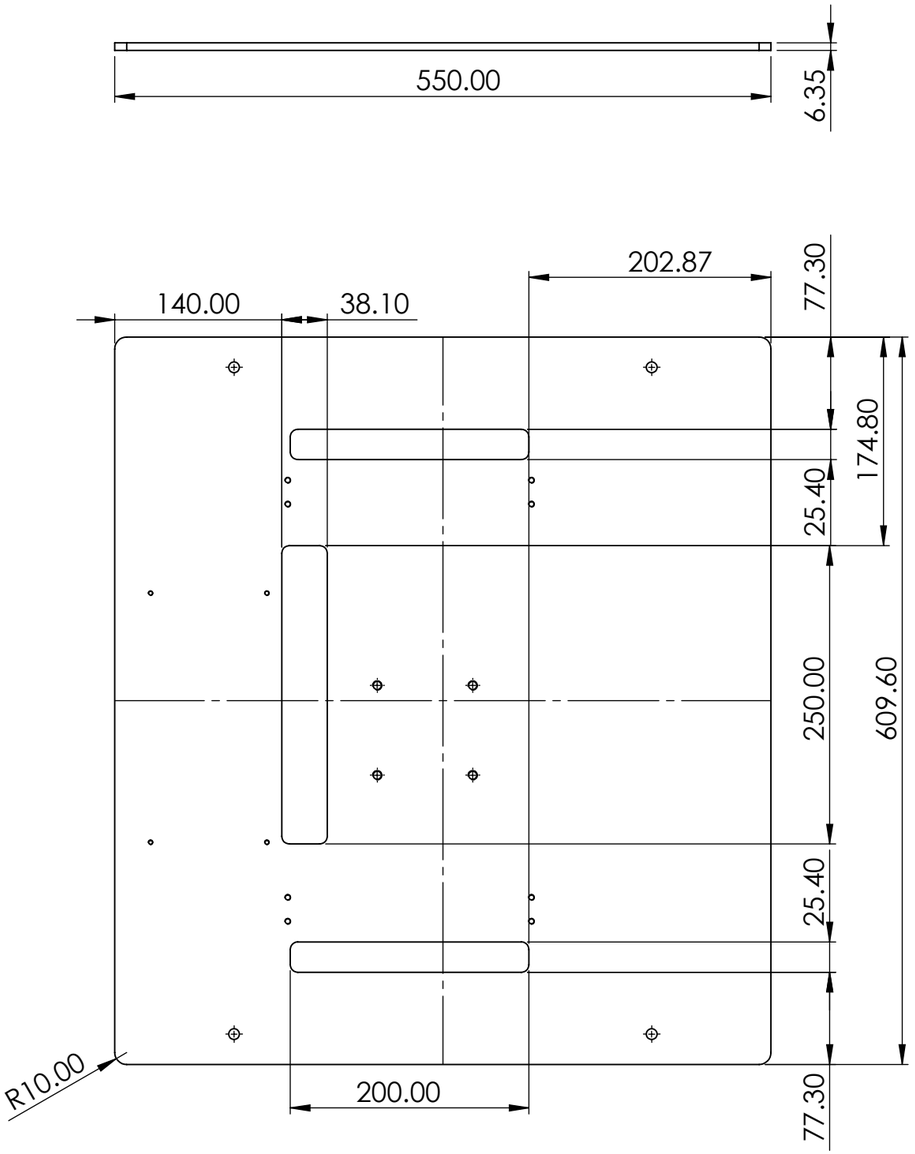

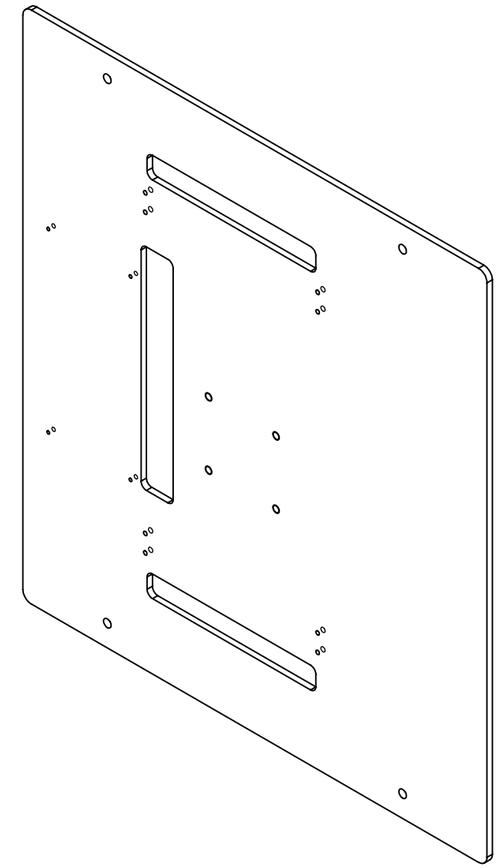

FM002-MVA-102-001

PAG. 1 de 2

MEDIDA ESPECIAL

ALL TECHNICAL DATA DISCLOSED HERE IN IS THE PROPERTY OF JOYSON SAFETY SYSTEMS AND SHALL NOT BE USED BY ANY OTHER MANUFACTURER, PROCUREMENT OR DISCLOSURE WITHOUT WRITTEN PERMISSION OF THE OWNMER.

AUTHORIZE	TALLER	QUALITY

NOTES:

Pieza libre de filos y rebabas.

REV	DESCRIPTION	DATE	APPROVED

REVIEWS

TOTAL OF PIECES: 2 Pza.

ANG. PROF

UNLESS OTHERWISE SPECIFIED

TOLERANCES DIMENSIONS	ISO 2768-1 mK-E ASME Y14.5M-1994	
MM	INCHES	ANGLES
+.1 -.1	+.004 -.004	+1° -1°

MATERIAL: 6061 Aluminium

SURFACE TREATMENT: Pulido

HARDNESS: N.A.

JOYSON SAFETY SYSTEMS

APPROVALS		DATE
DESIGNER	LGG	2/2/2022
REVIEW	RVM	2/2/2022

JOYSON TECHNICAL CENTER

MODEL NAME	FM003-TRN	SERIES No	M2021-156R
MACHINE NAME	FOLDING MACHINE J34A HSAB		
PART NUMBER	FM002-MVA-102-001		
SIZE **B**	PART NAME		REV. **A**
ESCALE: 1:10		DRAWING IN MILLIMETERS	

JSSAM-JTC-MF-FM-0002

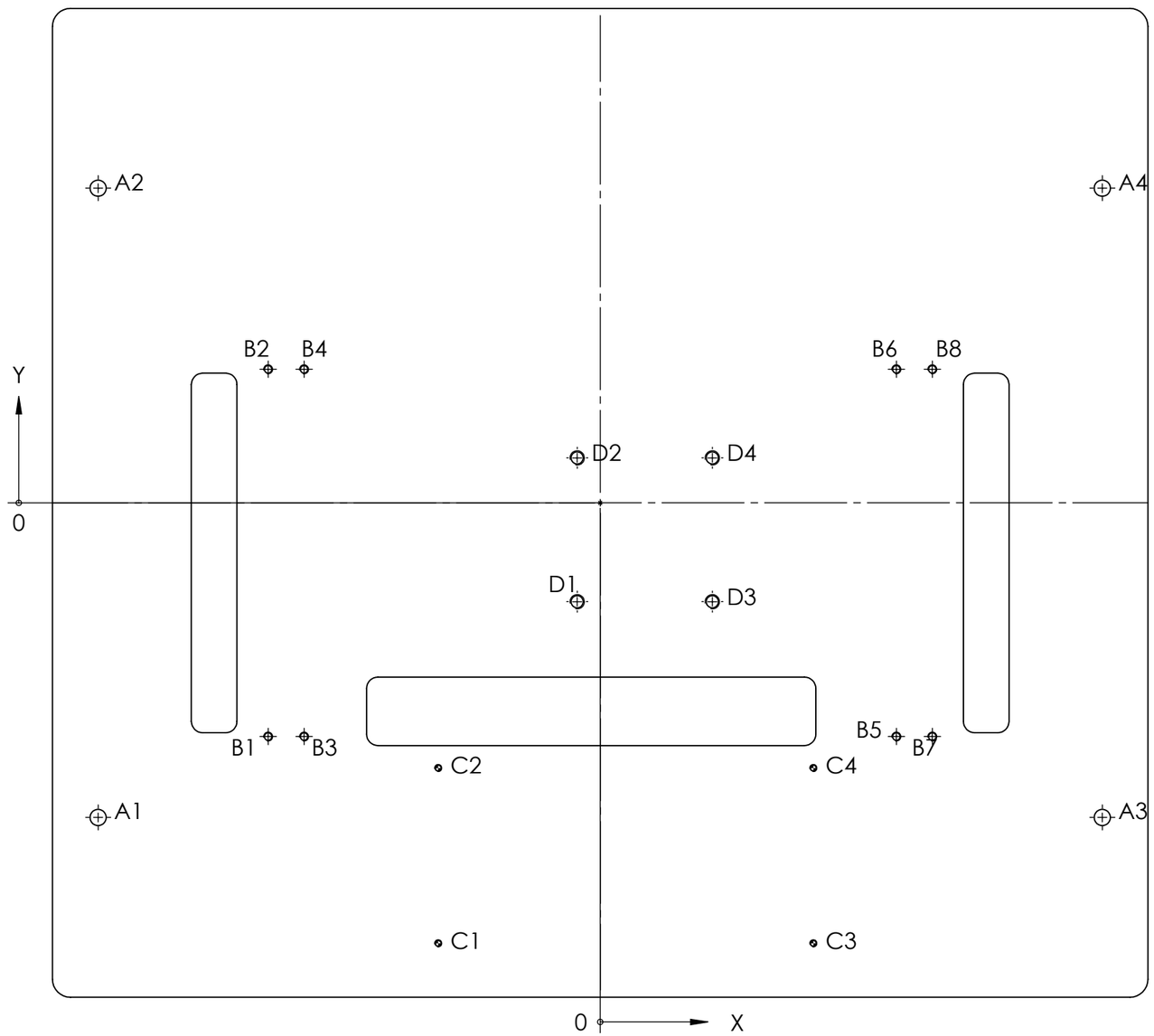

TAG	X LOC	Y LOC	SIZE
A1	-279.40	-175	∅ 9.00 THRU ALL
A2	-279.40	175	
A3	279.40	-175	
A4	279.40	175	
B1	-184.80	-130	∅ 4.20 THRU ALL M5x0.8 - 6H THRU ALL
B2	-184.80	74.27	
B3	-164.80	-130	
B4	-164.80	74.27	
B5	164.80	-130	
B6	164.80	74.27	
B7	184.80	-130	
B8	184.80	74.27	
C1	-90.15	-245	∅ 3.30 THRU ALL M4x0.7 - 6H THRU ALL
C2	-90.15	-147.50	
C3	118.60	-245	
C4	118.60	-147.50	
D1	-12.80	-55	∅ 6.80 THRU ALL M8x1.25 - 6H THRU ALL
D2	-12.80	25	
D3	62.40	-55	
D4	62.40	25	

FM002-MVA-102-001

PAG. 2 de 2

MEDIDA ESPECIAL

ALL TECHNICAL DATA DISCLOSED HERE IN IS THE PROPERTY OF JOYSON SAFETY SYSTEMS AND SHALL NOT BE USED BY ANY OTHER MANUFACTURER, PROCUREMENT OR DISCLOSURE WITHOUT WRITTEN PERMISSION OF THE OWNMER.

NOTES:
Pieza libre de filos y rebabas.

TOTAL OF PIECES: 2 Pza.
ANG. PROF

REV	DESCRIPTION	DATE	APPROVED

REVIEWS

AUTHORIZE | TALLER | QUALITY

UNLESS OTHERWISE SPECIFIED
TOLERANCES DIMENSIONS: ISO 2768-1 mK-E ASME Y14.5M-1994

MM	INCHES	ANGLES
+.1 -.1	+.004 -.004	+1° -1°

MATERIAL: 6061 Aluminium
SURFACE TREATMENT: Pulido
HARDNESS: N.A.

JOYSON SAFETY SYSTEMS

APPROVALS		DATE
DESIGNER	LGG	2/2/2022
REVIEW	RVM	2/2/2022

JOYSON TECHNICAL CENTER

MODEL NAME: FM003-TRN | SERIES No: M2021-156R
MACHINE NAME: FOLDING MACHINE J34A HSAB
PART NUMBER: FM002-MVA-102-001
SIZE: B | PART NAME | REV.: A
ESCALE: 1:5 | DRAWING IN MILLIMETERS

JSSAM-JTC-MF-FM-0002