REVISIONS				
No.	AUT.	LOC.	DESCRIPTION	DATE

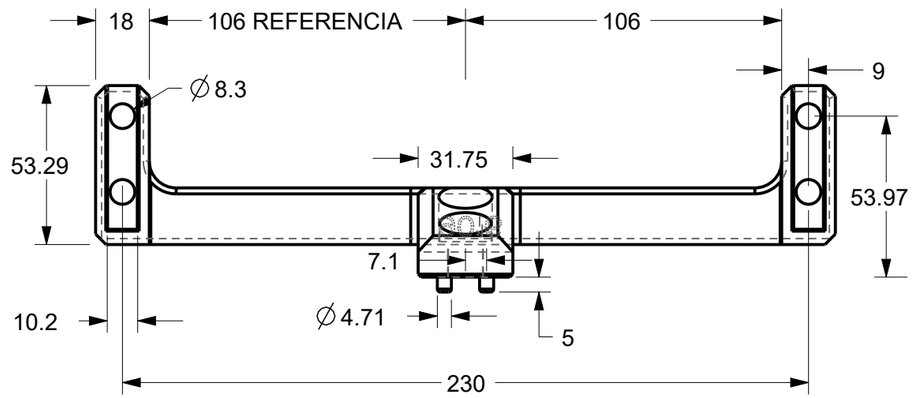

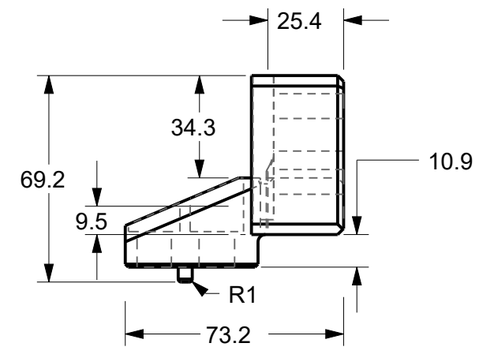

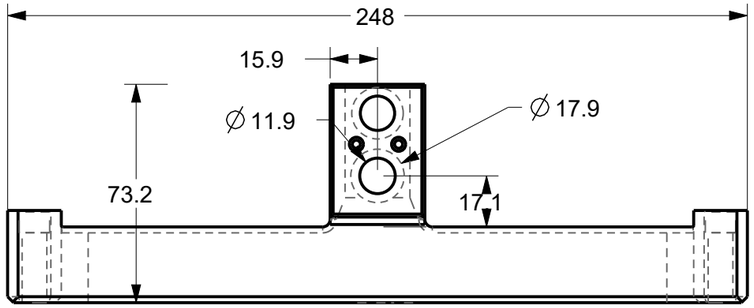

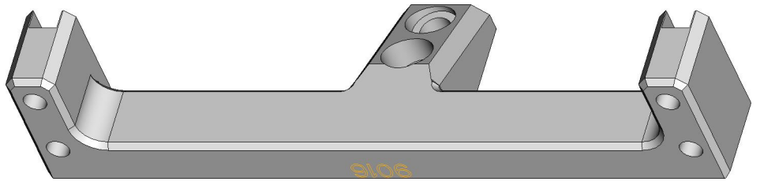

Nota: Colocar marcaje de pieza como se muestra bajo relieve solo identificacion.

FINISH ALLOWENCES (Ra)			
SYMBOL		µm	µin
N9		6.3	250
N8	MACHINING TURNING & MILLING	3.2	125
N7		1.6	63
N6	FINE TURNING & MILLING	0.8	32
N5	GRINDING	0.4	16
N4		0.2	8
N3	SUPER FINISHING	0.1	4

ALL GEOMETRIC SYMBOLS, DIMENSIONS AND TOLERANCES ACCORDING TO "ASME Y14.5 M-1994"

ALABEO RADIAL (RUNOUT) · ALABEO AXIAL (TOTAL RUNOUT) · CONDICION DE MATERIAL MAXIMO (MAXIMUM MAT'L CONDITION)
POSICION (POSITION) · CILINDRICIDAD (CYLINDRICITY) · CONDICION DE MATERIAL MINIMO (LEAST MAT'L CONDITION)
SIMETRIA (SYMMETRY) · PERPENDICULARIDAD (PERPENDICULARITY) · ZONA PROYECTADA DE TOLERANCIA (PROJECTED TOL. ZONE)
ANGULARIDAD (ANGULARITY) · RECTILINEIDAD (STRAIGHTNESS) · ENTRE (BETWEEN)
PLANICIDAD (FLATNESS) · CONCENTRICIDAD (CONCENTRICITY) · DIMENSION BASICA (BASIC DIMENSION)
PERFIL DE LINEA (PROFILE OF LINE) · PARALELISMO (PARALLELISM) · DATO ESPECIFICO (DATUM TARGET)
PERFIL DE SUPERFICIE (PROFILE OF SURFACE) · DIAMETRO (DIAMETER) · SIMBOLO DE CARACTERISTICA DATO (DATUM IDENT. SYMBOL)
CIRCULARIDAD (CIRCULARITY)

THE INFORMATION CONTAINED IN THIS DOCUMENT IS PROTECTED BY LAW OF COPYRIGHT AND PROPERTY INTELLECTUAL AND FORBIDDEN THEIR TOTAL OR PARTIAL REPRODUCTION FOR ANY MEANS WITHOUT YOUR OWNER'S AUTHORIZATION:
FORJA DE MONTERREY S.A. DE C.V.

MATERIAL: AISI 4140		
HEAT TREATMENT: N/A	DRAWING FILE: NUR6_O1_O2_9016	
WEIGHT: kg	SOLID FILE: NUR6_O1_O2_9016	
TOLERANCE: 0.15MM	DRAWN BY: EVL	DATE: 20/Ene/21
MFG EQUIPMENT.	CHECKED BY: MAV	DATE: 20/Ene/21
COSTUMER:	APPROVED BY: RPC	DATE: 20/Ene/21

FORJA DE MONTERREY S.A. DE C.V.
CARR. MONTERREY COLOMBIA Km.6.5
CD. GENERAL ESCOBEDO
C.P. 66050
NUEVO LEON, MEXICO.

UNA EMPRESA DEL GRUPO QUIMMCO

NAME: Base de gripper para gripper R6 9016

PROJECTION:	COSTUMER REFERENCE:	SHEET: 1 DE 1	REV:
	REF. F.de.M.	SCALE: 1:2	UNITS: