NAME	DATE	TIME (HRS)

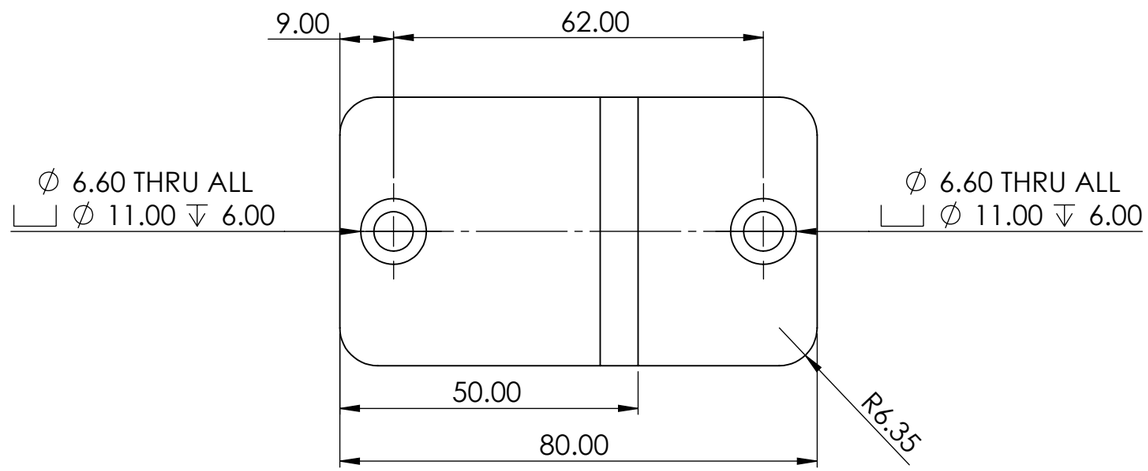

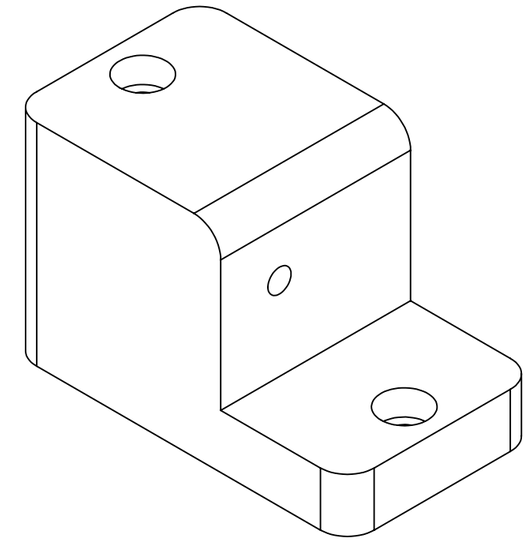

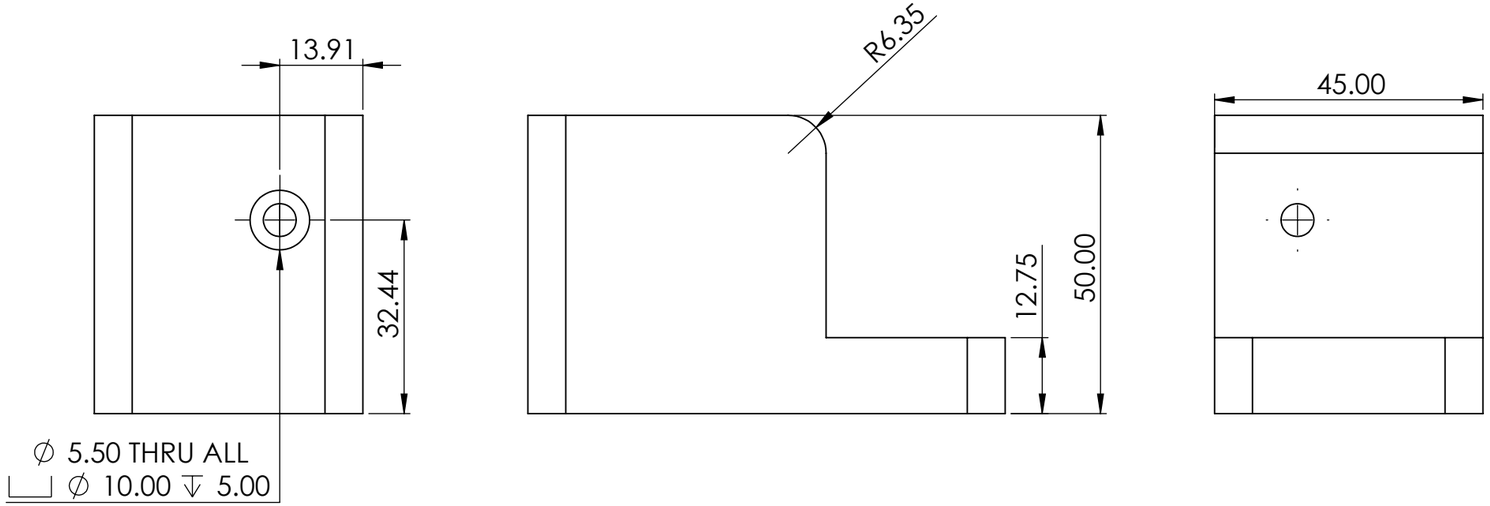

WGS001-TRN-400-005

PAG. 1 de 1

MEDIDA ESPECIAL

ALL TECHNICAL DATA DISCLOSED HERE IN IS THE PROPERTY OF JOYSON SAFETY SYSTEMS AND SHALL NOT BE USED BY ANY OTHER MANUFACTURER, PROCUREMENT OR DISCLOSURE WITHOUT WRITTEN PERMISSION OF THE OWNMER.

AUTHORIZE	TALLER	QUALITY

NOTES:

Pieza libre de filos y rebabas.

REV	DESCRIPTION	DATE	APPROVED

REVIEWS

TOTAL OF PIECES: 1 Pza.

ANG. PROF

UNLESS OTHERWISE SPECIFIED

TOLERANCES DIMENSIONS: ISO 2768-1 mK-E ASME Y14.5M-1994

MM	INCHES	ANGLES
+.1 -.1	+.004 -.004	+1° -1°

MATERIAL: 1018 Cold Rolled

SURFACE TREATMENT: Galvanizado

HARDNESS: N.A.

JOYSON SAFETY SYSTEMS

APPROVALS		DATE
DESIGNER	ABG	5/9/2022
REVIEW	RVM	5/9/2022

JOYSON TECHNICAL CENTER

MODEL NAME	M2022-012	SERIES No	WGS001-TRN
MACHINE NAME	WING GUARD SINGLE #1		
PART NUMBER	WGS001-TRN-400-005		
SIZE B	PART NAME WGS001-TRN-400-005		REV. A
ESCALE: 1:1		DRAWING IN MILLIMETERS	