NAME	DATE	TIME (HRS)

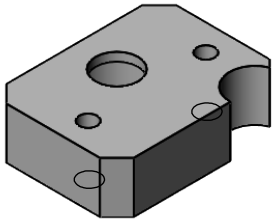

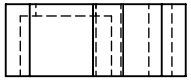

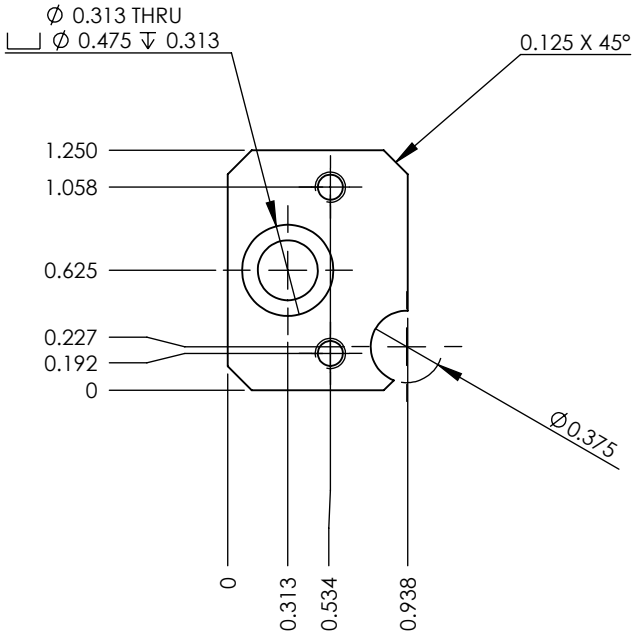

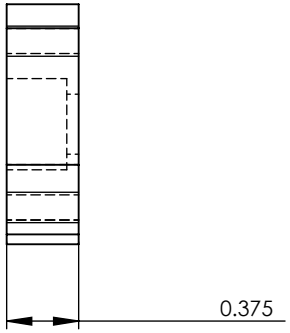

QUALITY

AUTHORIZE

TALLER

NOTES: Pieza libre de filos y rebabas.
TODAS LAS DIMENSIONES SE APLICAN A LA PIEZA TERMINADA INCLUYENDO EL TRATAMIENTO DE SUPERFICIE

TOTAL OF PIECES: **01**

ANG. PRO

REV	DESCRIPTION	DATE	APPROVED

REVIEWS

UNLESS OTHERWISE SPECIFIED

TOLERANCES DIMENSIONS: ISO 2768-1 mK-E / ASME Y14.5M-1994

MM	INCHES	ANGLES
+.1 -.1	+.004 -.004	+1°-1°

MATERIAL: ALUMINIO (6061-T6)

SURFACE TREATMENT: N.A.

HARDNESS: N.A.

PAG. 1 de 2

MEDIDA ESPECIAL

JOYSON SAFETY SYSTEMS

APPROVALS		DATE
DESIGNER	JHPH	5/21/2021
REVIEW	JATA	5/21/2021

ALL TECHNICAL DATA DISCLOSED HERE IN IS THE PROPERTY OF JOYSON SAFETY SYSTEMS AND SHALL NOT BE USED BY ANY OTHER MANUFACTURER, PROCUREMENT OR DISCLOSURE WITHOUT WRITTEN PERMISSION OF THE OWNMER.

JOYSON TECHNICAL CENTER

MODEL NAME: **EASM001-P2** SERIES No **M2021-026**

MACHINE NAME: **EA SETTING MACHINE CGST**

PART NUMBER: EASM001-P2-300-090

SIZE	PART NAME	REV.
A	PART 300-090-3	**A**

ESCALE 1:1 **DRAWING IN** INCHES

JSSAM-JTC-MF-FM-0002-001