NAME	DATE	TIME (HRS)

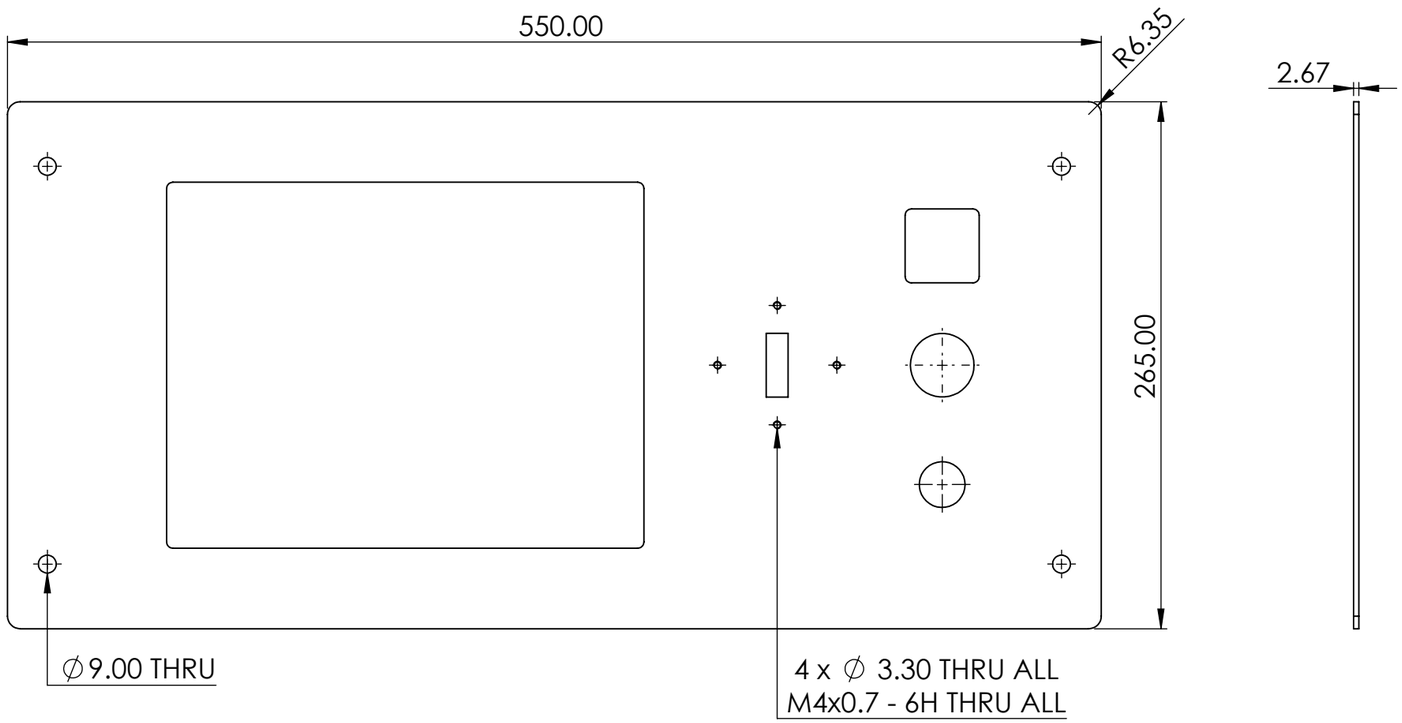

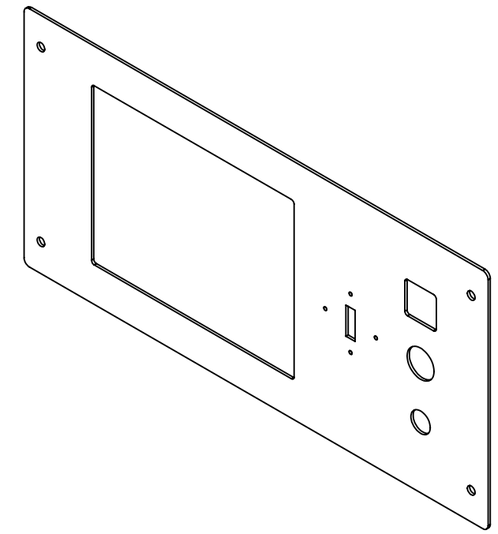

MDM001-TRN-1100-002

PAG. 1 de 1

MEDIDA ESPECIAL

ALL TECHNICAL DATA DISCLOSED HERE IS PROPERTY OF **TAKATA** SEAT BELTS INC. AND SHALL NOT BE USED BY ANY OTHER MANUFACTURER, PROCUREMENT OR DISCLOSURE WITHOUT WRITTEN PERMISSION OF THE OWNER

AUTHORIZE	TALLER	QUALITY

NOTES:

REV	DESCRIPTION	DATE	APPROVED

REVIEWS

TOTAL OF PIECES	1 Pza.
ANG. PROF	

UNLESS OTHERWISE SPECIFIED

TOLERANCES DIMENSIONS	ISO 2768-1 mK-E ASME Y14.5M-1994	
MM	INCHES	ANGLES
+.1 -.1	+.004 -.004	+1° -1°

MATERIAL:	Inox. Cal. 12
SURFACE TREATMENT	N.A.
HARDNESS	N.A.

TAKATA

APPROVALS		DATE
DESIGNER	LGG	05-Apr-19
REVIEW	JEC	05-Apr-19

TAKATA MONTERREY TECHNICAL CENTER

MODEL NAME	MDM001-TRN	SERIES No	M2019-067
MACHINE NAME	Dobladora Manual		
PART NUMBER	MDM001-TRN-1100-002		
SIZE B	PART NAME MDM001-TRN-1100-002		REV. A
ESCALE: 1:5		DRAWING IN MILLIMETERS	

TKH-MTC-MF-FM-0016-004