NAME	DATE	TIME (HRS)

TAG	X LOC	Y LOC	SIZE
A1	-21.21	-21.21	∅ 5.00 THRU ALL
A2	-21.21	21.21	∅ 5.00 THRU ALL
A3	21.21	-21.21	∅ 5.00 THRU ALL
A4	21.21	21.21	∅ 5.00 THRU ALL

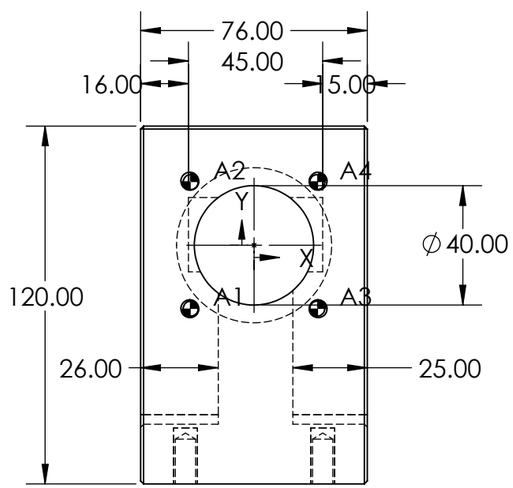

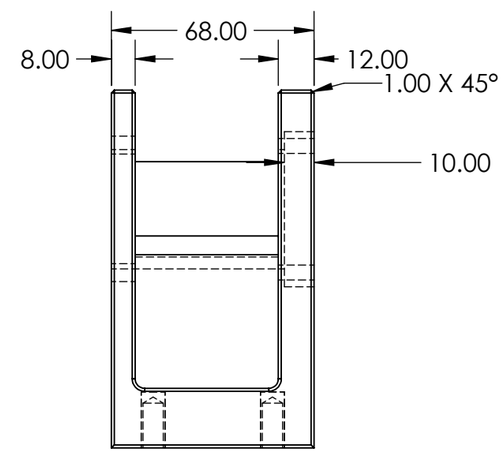

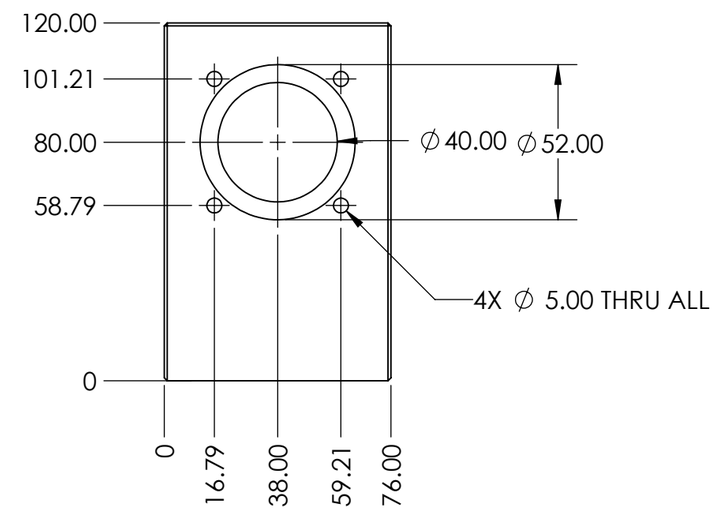

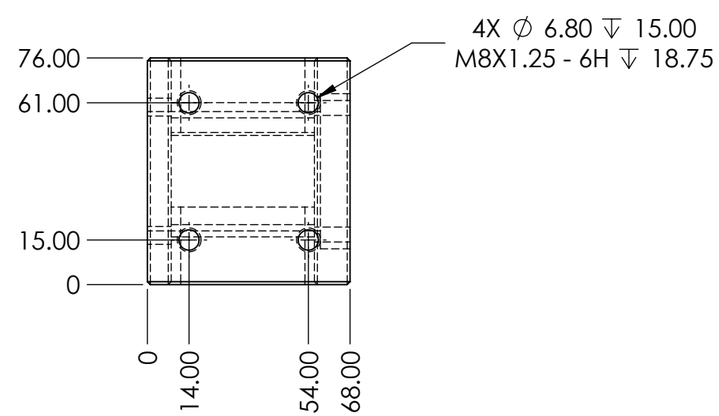

PFM010-MVA-300-003

PAG. 1 de 1

E MEDIDA ESPECIAL

ALL TECHNICAL DATA DISCLOSED HERE IN IS THE PROPERTY OF JOYSON SAFETY SYSTEMS AND SHALL NOT BE USED BY ANY OTHER MANUFACTURER, PROCUREMENT OR DISCLOSURE WITHOUT WRITTEN PERMISSION OF THE OWNMER.

AUTHORIZE | TALLER | QUALITY

NOTES:
Pieza libre de filos y rebabas.

TOTAL OF PIECES: 6 Pza.
ANG. PROF

REV	DESCRIPTION	DATE	APPROVED

REVIEWS

UNLESS OTHERWISE SPECIFIED

TOLERANCES DIMENSIONS	ISO 2768-1 mK-E ASME Y14.5M-1994	
MM	INCHES	ANGLES
+.1 -.1	+.004 -.004	+1° -1°

MATERIAL: ALUMINIUM
SURFACE TREATMENT: ANODIZED
HARDNESS: N/A

JOYSON SAFETY SYSTEMS

APPROVALS		DATE
DESIGNER	JLOV	3/23/2022
REVIEW	RVM	3/23/2022

JOYSON TECHNICAL CENTER

MODEL NAME: PFM010-MVA | SERIES No: M2022-009
MACHINE NAME: FOLDING MACHINE CANOO DAB
PART NUMBER: PFM010-MVA-300-003

SIZE	PART NAME	REV.
B	PFM010-MVA-300-003	A

ESCALE: 1:2 | DRAWING IN MILLIMETERS

JSSAM-JTC-MF-FM-0002-001