NAME	DATE	TIME (HRS)

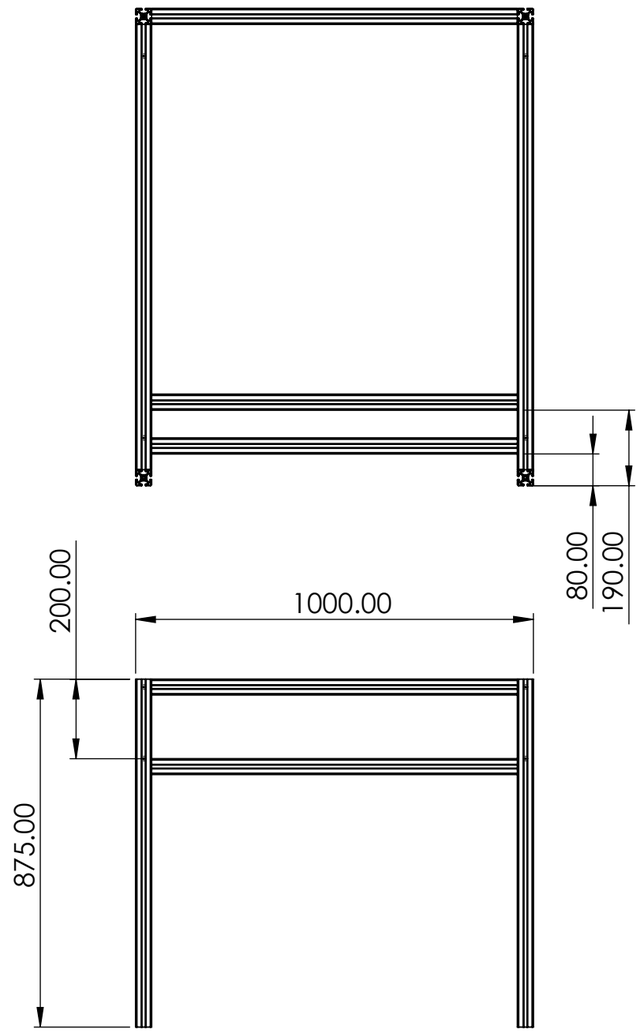

WGD001-TRN-200-001

PAG. 1 de 2

MEDIDA ESPECIAL

ALL TECHNICAL DATA DISCLOSED HERE IN IS THE PROPERTY OF JOYSON SAFETY SYSTEMS AND SHALL NOT BE USED BY ANY OTHER MANUFACTURER, PROCUREMENT OR DISCLOSURE WITHOUT WRITTEN PERMISSION OF THE OWNMER.

AUTHORIZE	TALLER	QUALITY

NOTES:

Pieza libre de filos y rebabas.

REV	DESCRIPTION	DATE	APPROVED

REVIEWS

TOTAL OF PIECES: 1 Pza.

ANG. PROF

UNLESS OTHERWISE SPECIFIED

TOLERANCES DIMENSIONS: ISO 2768-1 mK-E ASME Y14.5M-1994

MM	INCHES	ANGLES
+.1 -.1	+.004 -.004	+1° -1°

MATERIAL: 40*40 Profile

SURFACE TREATMENT: N.A.

HARDNESS: N.A.

JOYSON SAFETY SYSTEMS

APPROVALS		DATE
DESIGNER	JLOV	5/31/2022
REVIEW	RVM	5/31/2022

JOYSON TECHNICAL CENTER

MODEL NAME	WGD001-TRN	SERIES No	M2022-077
MACHINE NAME	WING WARD DOBLE #1		
PART NUMBER	WGD001-TRN-200-001		
SIZE B	PART NAME WGD001-TRN-200-001		REV. A
ESCALE: 1:20		DRAWING IN MILLIMETERS	

JSSAM-JTC-MF-FM-0002

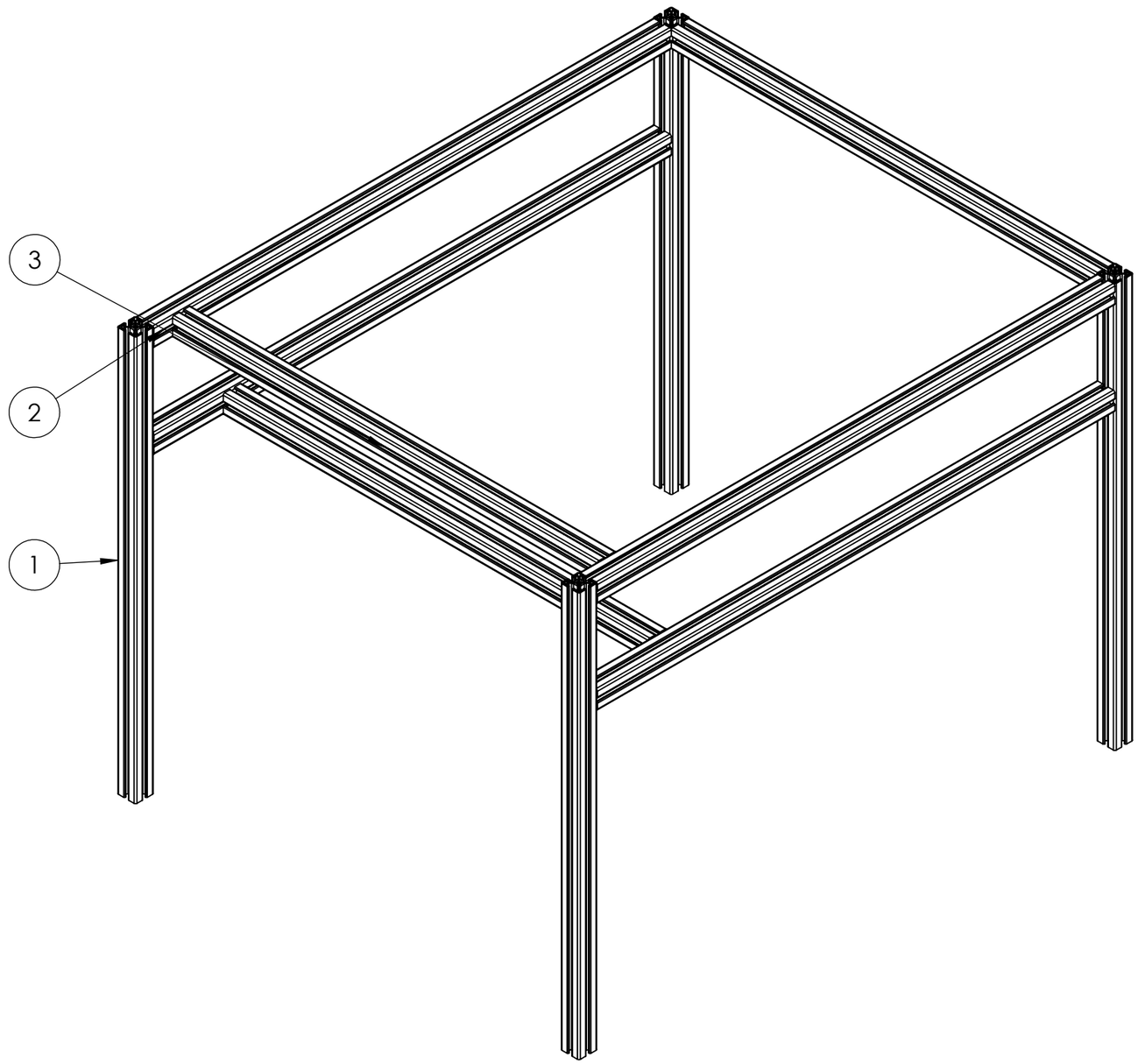

ITEM NO.	QTY.	LENGTH
1	4	875
2	4	1120
3	3	920

WGD001-TRN-200-001

PAG. 2 de 2

MEDIDA ESPECIAL

ALL TECHNICAL DATA DISCLOSED HERE IN IS THE PROPERTY OF JOYSON SAFETY SYSTEMS AND SHALL NOT BE USED BY ANY OTHER MANUFACTURER, PROCUREMENT OR DISCLOSURE WITHOUT WRITTEN PERMISSION OF THE OWNMER.

AUTHORIZE	TALLER	QUALITY

NOTES:
Pieza libre de filos y rebabas.

TOTAL OF PIECES	1 Pza.
ANG. PROF	

REV	DESCRIPTION	DATE	APPROVED

REVIEWS

UNLESS OTHERWISE SPECIFIED

TOLERANCES DIMENSIONS	ISO 2768-1 mK-E ASME Y14.5M-1994	
MM	INCHES	ANGLES
+.1 -.1	+.004 -.004	+1° -1°

MATERIAL:	40*40 Profile
SURFACE TREATMENT	N.A.
HARDNESS	N.A.

JOYSON SAFETY SYSTEMS

APPROVALS		DATE
DESIGNER	JLOV	5/31/2022
REVIEW	RVM	5/31/2022

JOYSON TECHNICAL CENTER

MODEL NAME	WGD001-TRN	SERIES No	M2022-077
MACHINE NAME	WING WARD DOBLE #1		
PART NUMBER	WGD001-TRN-200-001		
SIZE B	PART NAME WGD001-TRN-200-001		REV. A
ESCALE: 1:20		DRAWING IN MILLIMETERS	

JSSAM-JTC-MF-FM-0002