NAME	DATE	TIME (HRS)

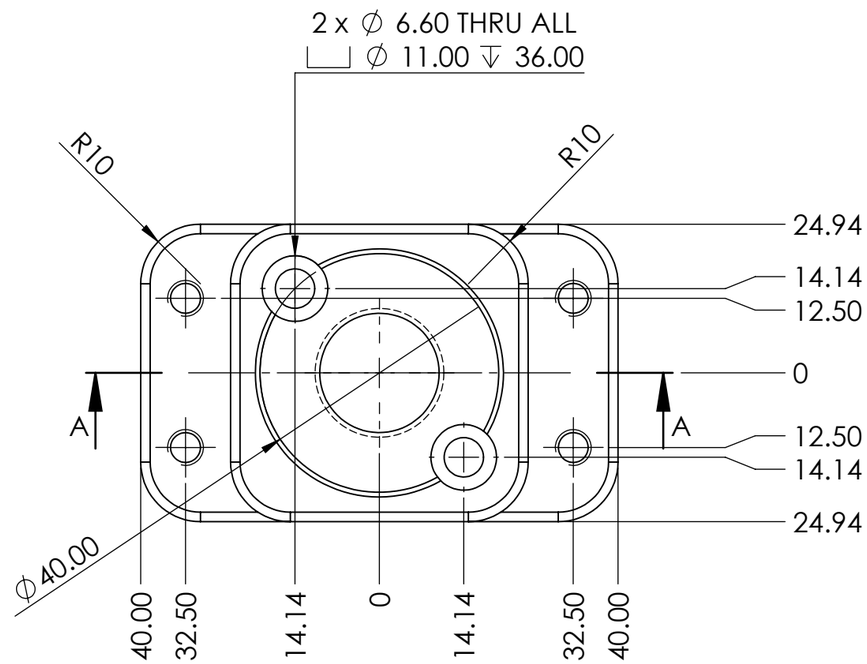

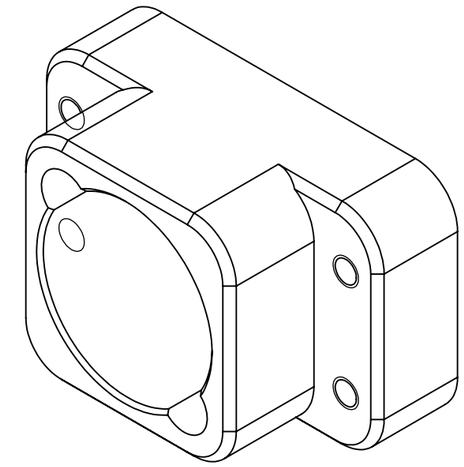

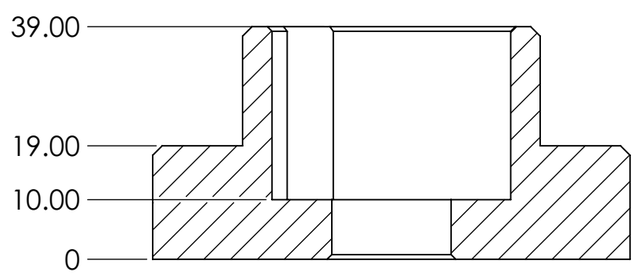

SECTION A-A

JAPM003-AC-103-02

PAG. 1 de 1

E MEDIDA ESPECIAL

ALL TECHNICAL DATA DISCLOSED HERE IN IS THE PROPERTY OF JOYSON SAFETY SYSTEMS AND SHALL NOT BE USED BY ANY OTHER MANUFACTURER, PROCUREMENT OR DISCLOSURE WITHOUT WRITTEN PERMISSION OF THE OWNMER.

AUTHORIZE	TALLER	QUALITY

NOTES:
Pieza libre de filos y rebabas.

REV	DESCRIPTION	DATE	APPROVED

REVIEWS

TOTAL OF PIECES	8 Pza.
ANG. PROF	

UNLESS OTHERWISE SPECIFIED

TOLERANCES DIMENSIONS	ISO 2768-1 mK-E ASME Y14.5M-1994	
MM	INCHES	ANGLES
+.1 -.1	+.004 -.004	+1° -1°

MATERIAL:	4140T
SURFACE TREATMENT	Galvanizado
HARDNESS	57-60 HRC

JOYSON SAFETY SYSTEMS

APPROVALS		DATE
DESIGNER	JEC	06/07/2022
REVIEW	JEC	06/07/2022

JOYSON TECHNICAL CENTER

MODEL NAME	SERIES No
MACHINE NAME	
PART NUMBER	JAPM003-AC-103-02
SIZE **B**	PART NAME
REV. **A**	
ESCALE: 1:1	DRAWING IN MILLIMETERS

TKH-MTC-MF-FM-0016-005