NAME	DATE	TIME (HRS)

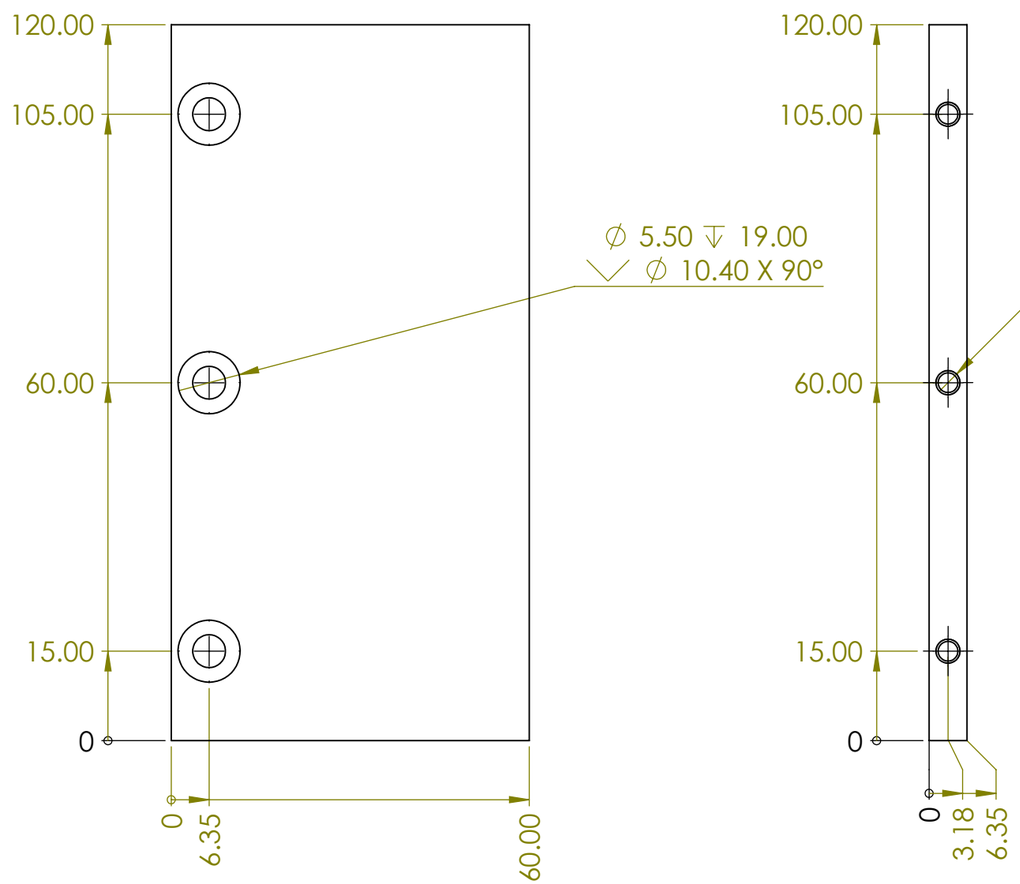

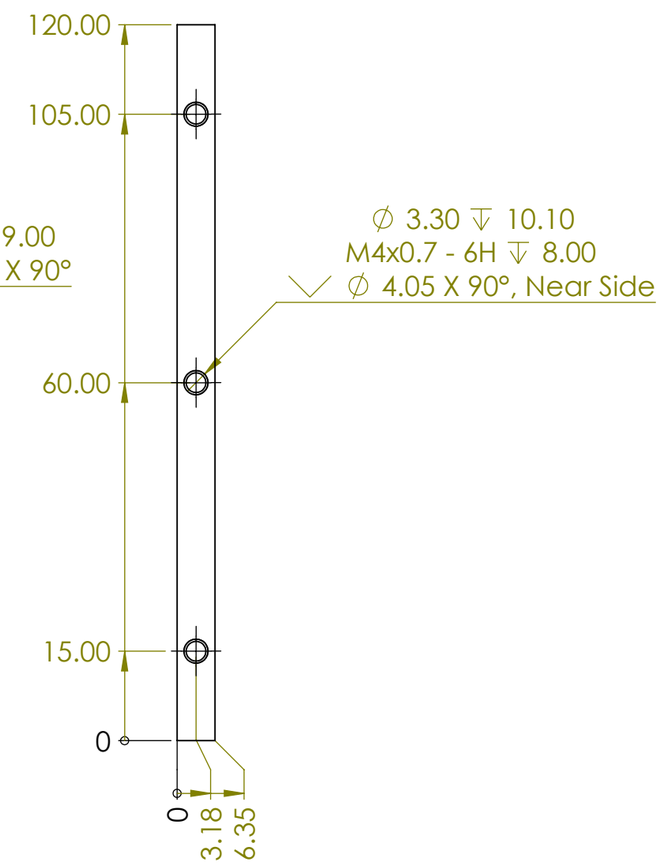

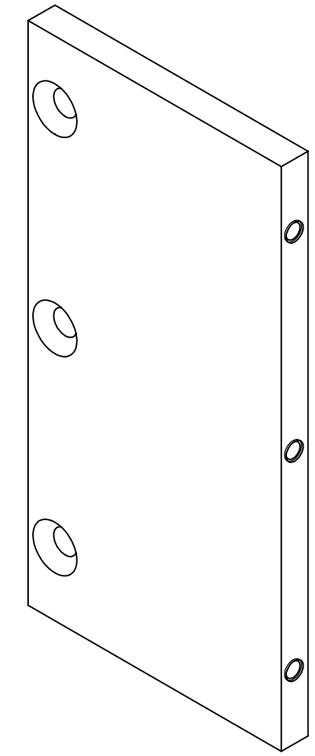

IC002-TRN-300-007

PAG. 1 de 1

E MEDIDA ESPECIAL

ALL TECHNICAL DATA DISCLOSED HERE IN IS THE PROPERTY OF JOYSON SAFETY SYSTEMS AND SHALL NOT BE USED BY ANY OTHER MANUFACTURER, PROCUREMENT OR DISCLOSURE WITHOUT WRITTEN PERMISSION OF THE OWNMER.

NOTES:

Pieza libre de filos y rebabas.

TOTAL OF PIECES	2 Pza.
ANG. PROF	

REV	DESCRIPTION	DATE	APPROVED

REVIEWS

UNLESS OTHERWISE SPECIFIED

TOLERANCES DIMENSIONS	ISO 2768-1 mK-E ASME Y14.5M-1994	
MM	INCHES	ANGLES
+.1 -.1	+.004 -.004	+1° -1°

MATERIAL:	6061 Aluminium
SURFACE TREATMENT	Pulido
HARDNESS	N.A.

JOYSON SAFETY SYSTEMS

APPROVALS		DATE
DESIGNER	JLOV	3/12/2021
REVIEW	RVM	3/12/2021

JOYSON TECHNICAL CENTER

MODEL NAME	IC002-TRN	SERIES No	M2021-004
MACHINE NAME	Inspectio Cell AFI		
PART NUMBER	IC002-TRN-300-007		
SIZE **B**	PART NAME Security Guard		REV. **A**
ESCALE: 1:1		DRAWING IN MILLIMETERS	

AUTHORIZE	TALLER	QUALITY

JSSAM-JTC-MF-FM-0002-001