DRILLING CHART					
HOLE	QUAN.	DRILL DIA.	DEPTH	TAP	REMARKS
1	2	15/32	THRU	-	O-RING SEAT SEE C'BORE #4 & #5
2	6	7/16	THRU	-	O-RING SEAT SEE C'BORE #1
3	6	17/32	THRU	-	
4	3	29/64	THRU	1/2-20	C'BORE SEE SECT. A-A
5	3	5/32	THRU	-	O-RING SEAT SEE C'BORE #2
6	1	5/8	THRU	-	O-RING SEAT SEE C'BORE #4
7	9	11/32	THRU	-	C'BORE SEE SECT. A-A
8	2	.751/.750	THRU	-	C'BORE SEE SECT. A-A

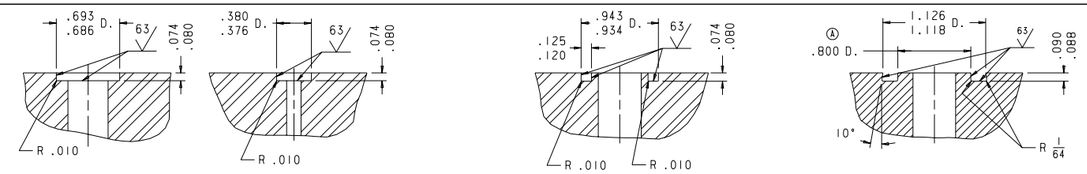

NOTE !!!
ALLOW FINISH MACHINING STOCK ON THESE SURFACES.
INSTALL ALL PLUGS & PLATES SHOWN ON OIS-100-1931-0
& WELD OIL TIGHT BEFORE FINISH MACHINING.

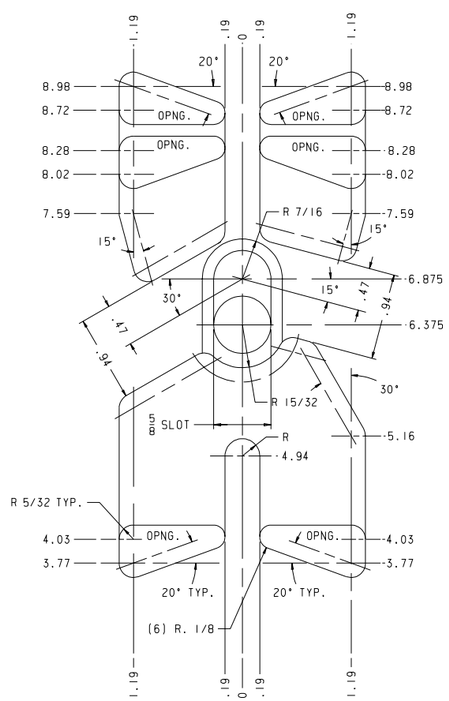

ENLARGED VIEW OF EXHAUST PASSAGES
(2 X SIZE)

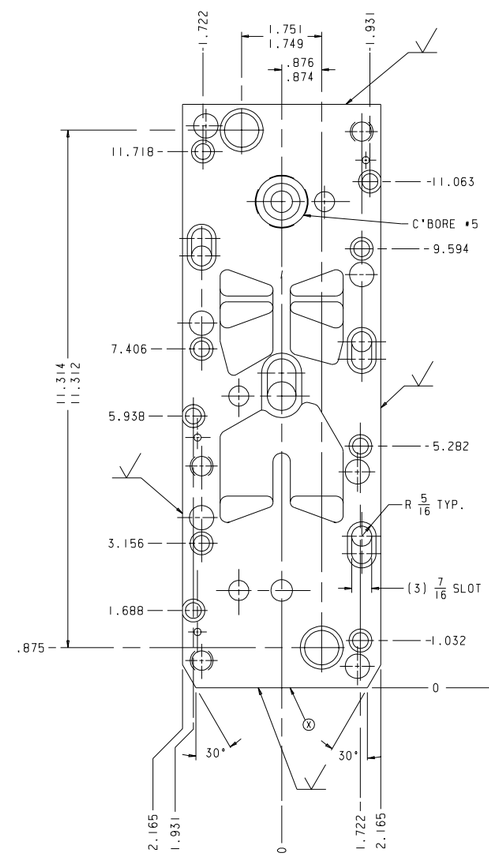

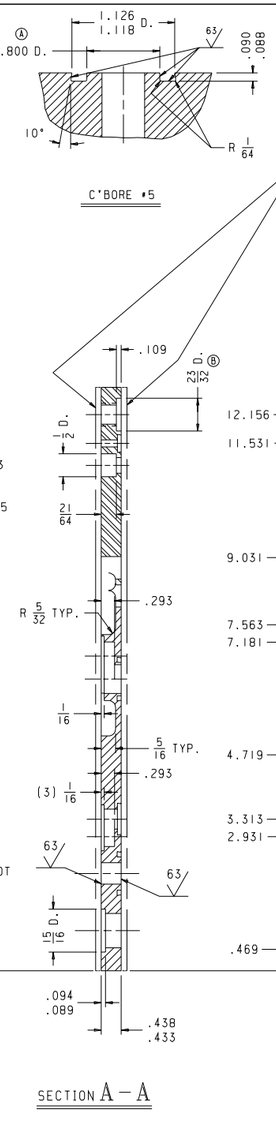

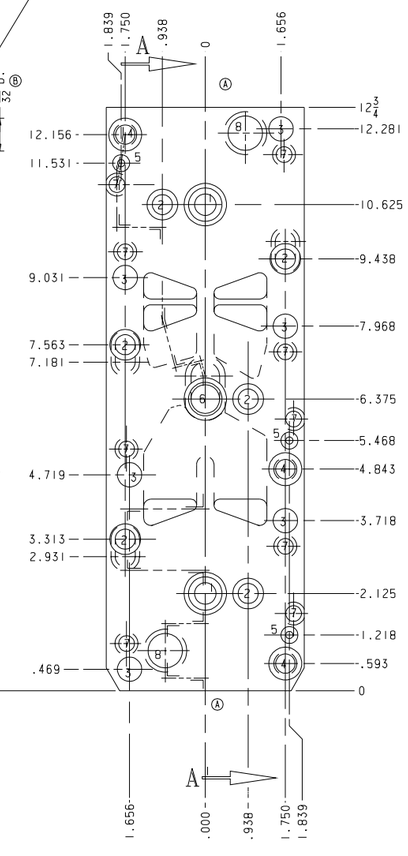

F355118

A	11-17-07				
	CHANGES				

"INFORMATION CONTAINED HEREIN CONSTITUTES PROPRIETARY CONFIDENTIAL AND TRADE SECRET INFORMATION OF OWENS-ILLINOIS, INC., AND IS TO BE ACCEPTED SUBJECT TO THAT UNDERSTANDING. IT IS TO BE KEPT CONFIDENTIAL AND NOT TO BE COPIED, USED, OR CONVEYED TO OTHERS WITHOUT OWENS-ILLINOIS' WRITTEN AUTHORIZATION."

PART TOLERANCES UNLESS OTHERWISE NOTED
MAXIMUM FINISHED SURFACE ROUGHNESS: 125
FINISHED DIMENSION TOLERANCES:
ALL FRACTIONAL DIMENSIONS: ±.015
DECIMAL X.X = ±.031 ANGULAR X = ±1°
X.XX = ±.010 X.X = ±.5°
X.XXX = ±.005 X.XX = ±.25°
UNSPECIFIED THREADS ARE CLASS 2, BREAK ALL SHARP EDGES 1/32 MAX. & MARK PART NO. AT Ⓧ

PART NAME:	DISTRIBUTOR PLATE 8-1/2 T/G		
MATERIAL:	LOW CARBON STEEL		
TREATMENT:			
DRAWN:	PBW	SCALE:	FULL
CHECKED:		DATE:	8-23-04

OWENS-ILLINOIS
GLOBAL GLASS TECHNOLOGY

X | ANVIL | ANNOTATOR | 3D MODEL

DRAWING NUMBER
OIS-100-2112-1

UNITS: INCHES | SHEET NO.:
USED ON: OIS-03010

TBFX

DRAWING NUMBER OIS-100-2112-1	CHANGE LETTER A	CHANGED BY DAS	

CHANGE DESCRIPTION & REASON:

REMOVED (2) 1/8 x 45° CAMFERS.

REASON: CORRECTION. CHAMFERS NOT REQUIRED.

OWENS-ILLINOIS
GLOBAL GLASS TECHNOLOGY

TYPE: 1 - PATTERN, 2 - MATERIAL, 3 - FUNCTION, 4 - FINISH, 5 - CORRECTION, 6 - PARTS LIST, 7 - COMBINATION, 8 - OTHER

EFFECTIVITY: F - NEXT MANUFACTURED LOT; P - IN PROCESS - UP TO AFFECTED OPERATION - "X"; U - UNASSEMBLED PARTS - IN PROCESS, STORES, ASSEMBLY FLOOR - "P"; 4 - PARTS OR ASSEMBLIES IN MACHINES - "A"; 5 - PARTS OR ASSEMBLIES IN MACHINES - "A"; S - SPECIAL INSTRUCTIONS FOR HARD PARTS, MACHINE NO.'S, ETC.; R - RECORD ONLY

E.C.N. NO.	CODE	I	E
4461		5	P

AUTORIZADO
FECHA DE IMPRESIÓN: 28/01/2022
ADN - ADMINISTRACIÓN DE DIBUJOS NETWORK
Impresión generada por: Eduardo Alexander Valadez Arballo