General Dimension Tolerance			
0 ~ 4	± 0.1	16 ~ 63	± 0.3
4 ~ 16	± 0.2	63 ~	± 0.5

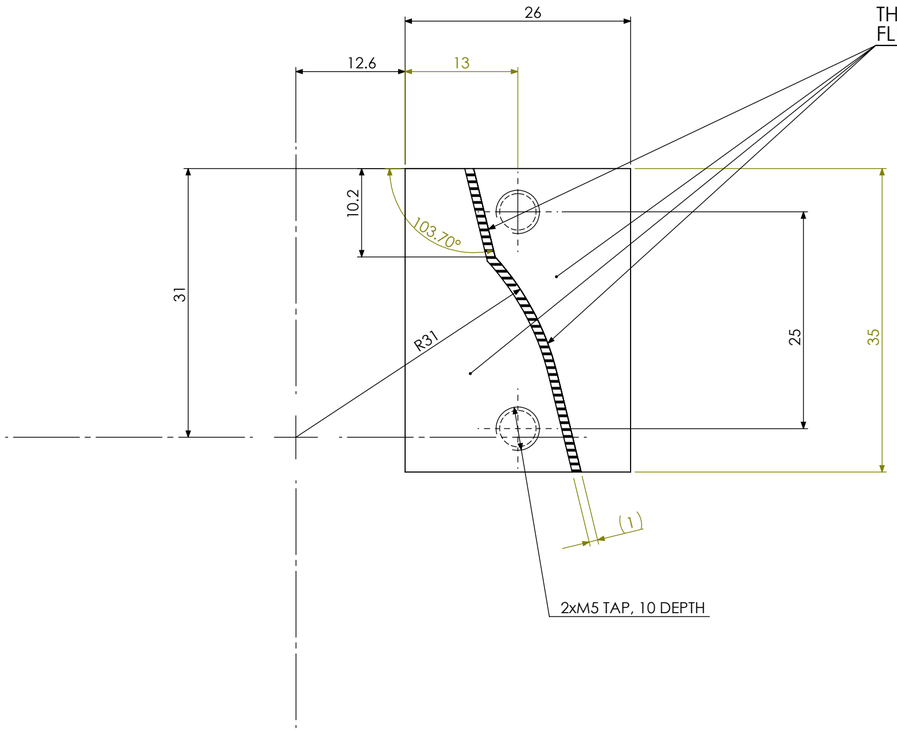

THESE SURFACE HAVE TO BE COVERED WITH
FLUORO RUBBER SHEET THICKNESS: 1mm SHORE A80 (COLOR: BLACK)

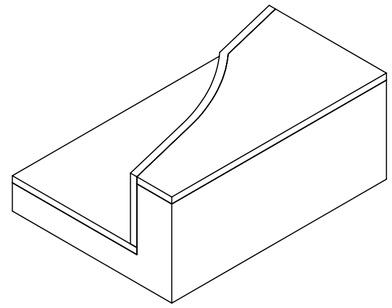

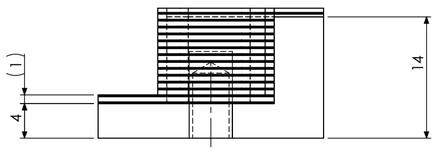

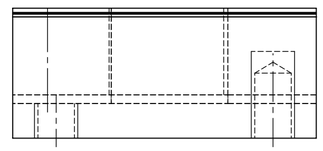

NOTE: UNLESS OTHERWISE SPECIFIED
ALL EDGES MUST BE C0.5

Rz 100 (Rz 25 Rz 6.3)

SURFACE TREATMENT	HEAT TREATMENT	WEIGTH	
MATERIAL:	RESEMBLANCE PART No.	IMPO CODE	I/O CODE
A7075BD-T6 (AISI 7075-T651)			
PART NAME	BLOCK		

DENSO MEXICO					DWG NO.		ASP CODE	SHEET
					M-0910729-060	A2		1 OF 1
APPROVED	CHECKED	CHECKED	DESIGNED	DRAWN				
			JAIR DAVILA	HIRAM MENDIAS	QTY.: 1	No.: 6		SCALE:2:1

CONFIDENTIAL