General Dimension Tolerance			
0 ~ 4	±0.1	16 ~ 63	±0.3
4 ~ 16	±0.2	63 ~	±0.5

REVISIONS			
REV	DESCRIPTION	DATE	APPROVED
1	DESIGN MODIFICATION	5/7/2021	

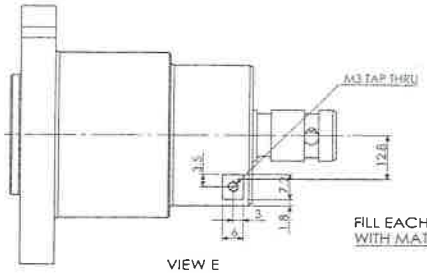

VIEW E

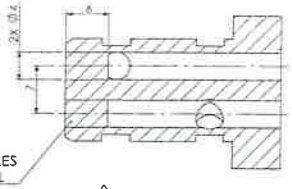

1 SECTION G-G

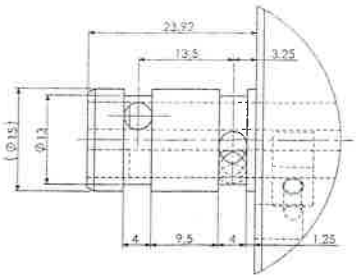

1 DETAIL F

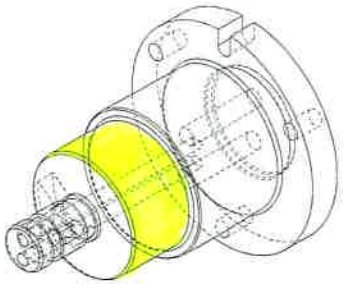

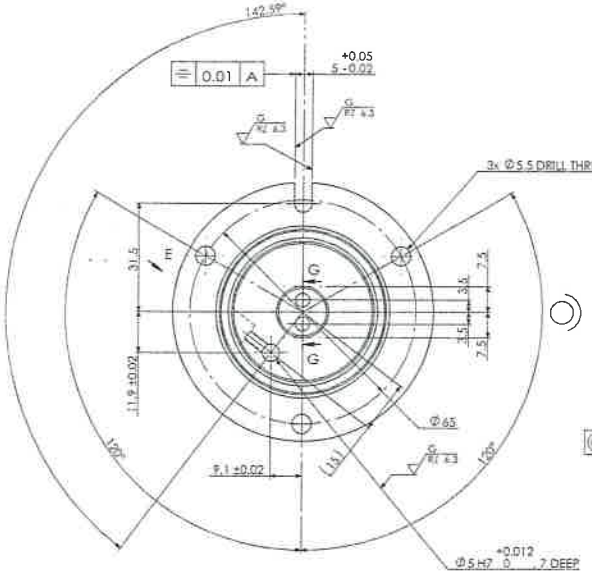

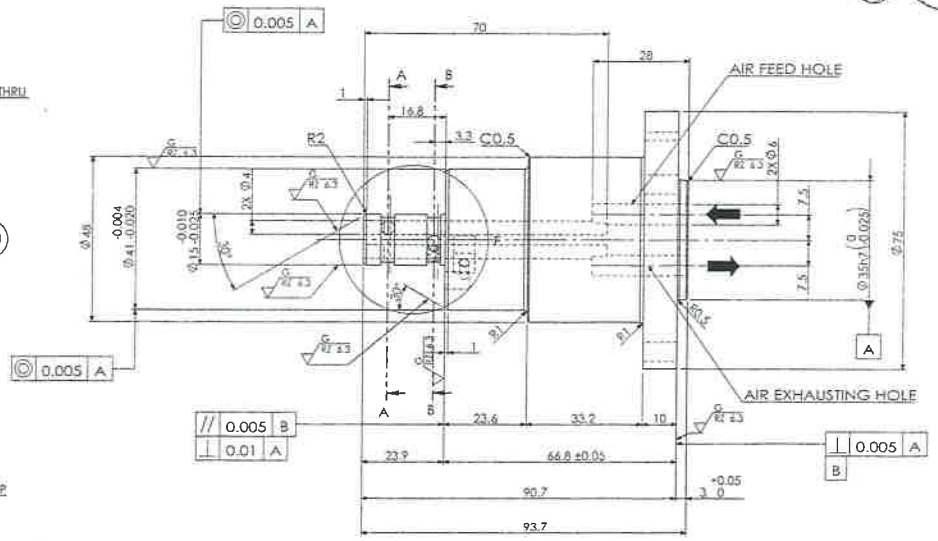

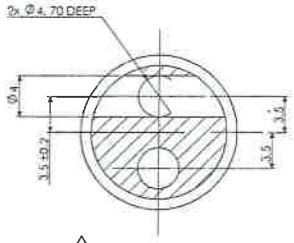

1 SECTION A-A

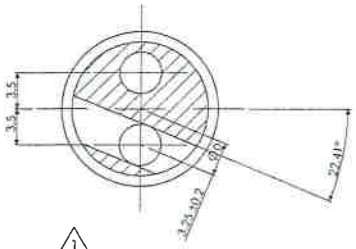

1 SECTION B-B

RZ 100 (RZ 6.3 G RZ 6.3)

NOTES
1: DIMENSIONS AND TOLERANCE ARE AFTER PLATING
2: CORNERS UNLESS OTHERWISE INDICATED, THAT OF C0.5
3: FOR 4320 - INTAKE

MICr-20 ±4μm	HRC61-63	
ALL PART	QT	
SKD11 (ASTM A681 D2)		
JIG		
DENSO MEXICO	PB-TM-08-1093-44-003	A2
	QTY : 1	No : 3

DENSO

CONFIDENTIAL

3

General Dimension Tolerance				
0 ~ 4	±0.1	16 ~ 63	±0.3	
4 ~ 16	±0.2	63 ~	±0.5	

REVISIONS			
REV	DESCRIPTION	DATE	APPROVED
1	DESIGN MODIFICATION	5/7/2021	

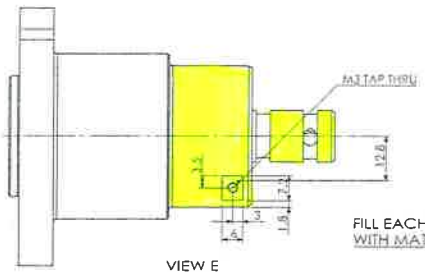

VIEW E

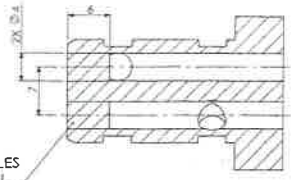

1 SECTION G-G

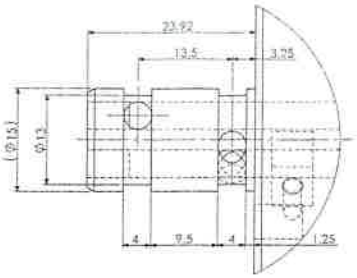

1 DETAIL F

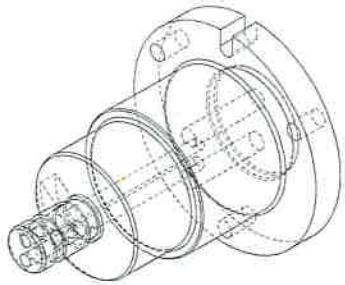

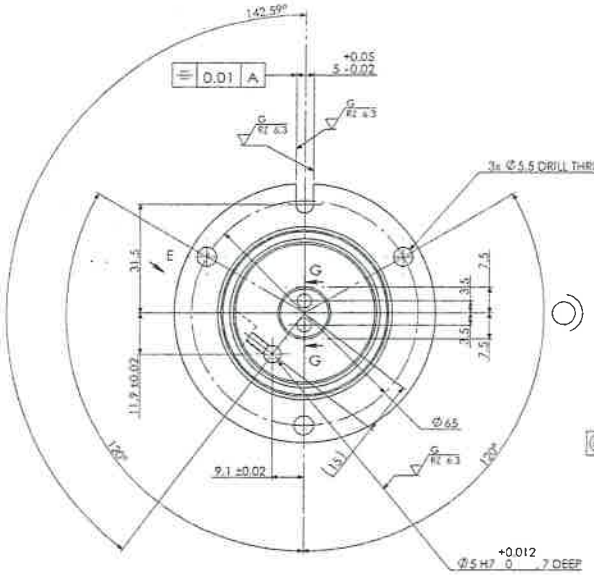

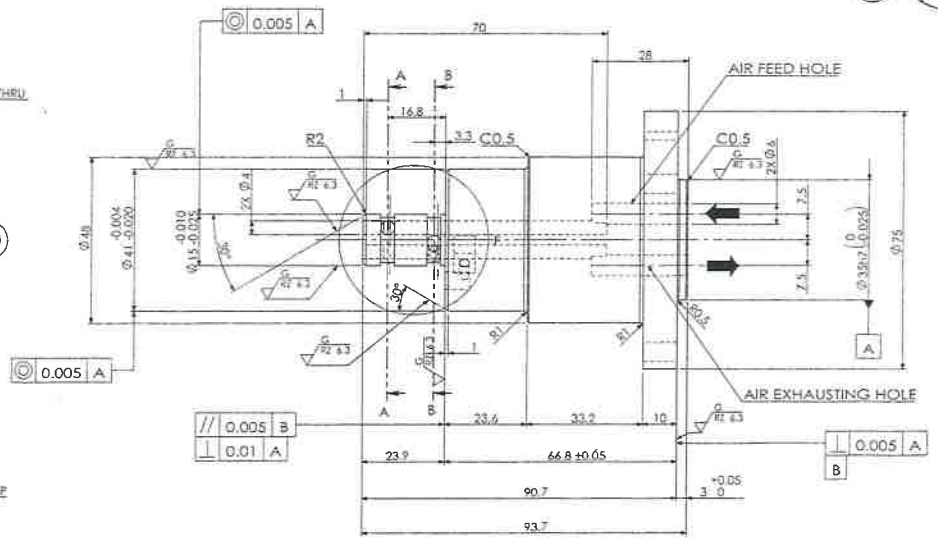

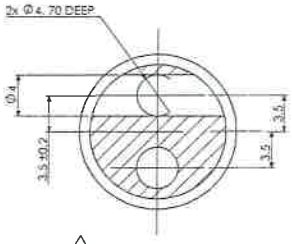

1 SECTION A-A

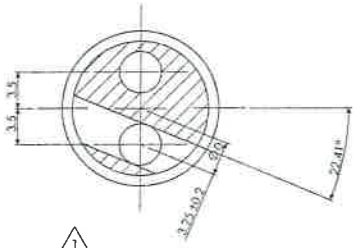

1 SECTION B-B

NOTES
1: DIMENSIONS AND TOLERANCE ARE AFTER PLATING
2: CORNERS UNLESS OTHERWISE INDICATED, THAT OF C0.5
3: FOR 4320 - INTAKE

MICr-20 ± 4μm	HRC61-63	
ALL PART	QT	
SKD11 (ASTM A681 D2)		
JIG		
DENSO MEXICO	PB-TM-08-1093-44-003	A2
	QTY.: 1	No.: 3

DENSO

CONFIDENTIAL

General Dimension Tolerance			
0 ~ 4	±0.1	16 ~ 63	±0.3
4 ~ 16	±0.2	63 ~	±0.5

REVISIONS			
REV.	DESCRIPTION	DATE	APPROVED
1	DESIGN MODIFICATION	5/7/2021	

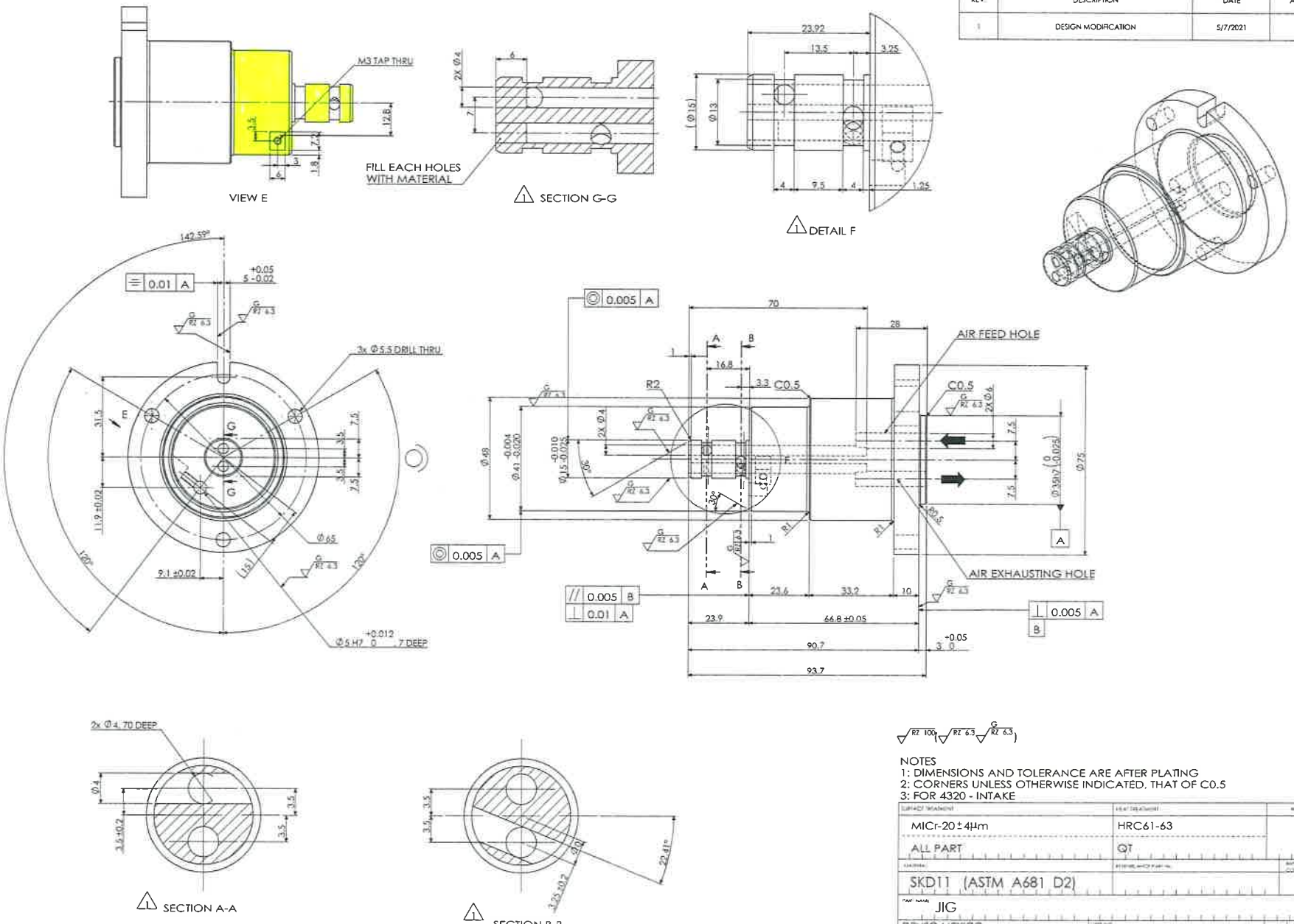

NOTES
1: DIMENSIONS AND TOLERANCE ARE AFTER PLATING
2: CORNERS UNLESS OTHERWISE INDICATED, THAT OF C0.5
3: FOR 4320 - INTAKE

MICr-20±4μm	HRC61-63	
ALL PART	QT	
SKD11 (ASTM A681 D2)		
JIG		
DENSO MEXICO	PB-TM-08-1093-44-003	A2
	QTY.: 1	No.: 3

DENSO

CONFIDENTIAL