ITEM	QTY	DESCRIPTION		PART No.
1	1	100 × 25 FLAT × 360 LONG (CUT TO SUIT)		MK400406AE02
2	1	NAMEPLATE		A48
3	2	NAMEPLATE RIVET TLP/D424BS		———
4	2	75 × 75 × 10 ANGLE × 1500 LONG		MK400406BE01
5	1	65 × 25 FLAT × 155 LONG		MK400406CE02
6	1	65 × 25 FLAT × 110 LONG		MK400406DE02
7	1	M20 THREADED ROD × 260 LONG		MK400406EE02
8	2	NUT		M20H5-Z
9	2	WASHER		M20-11-Z
10	1	32 PLATE × 40 × 55 LONG		MK400406FE02
11	4	BOLT - 1 SELF LOCKNUT		M12H1-70ZS
12	1	65 × 25 FLAT × 290 LONG (CUT TO SUIT)		MK400406GE02
13	1	65 × 20 FLAT × 286 LONG (CUT TO SUIT)		MK400406HE02
14	2	10 SQUARE × 65 LONG		MK400406JE02
15	1	65 × 25 FLAT × 75 LONG		MK400406KE02

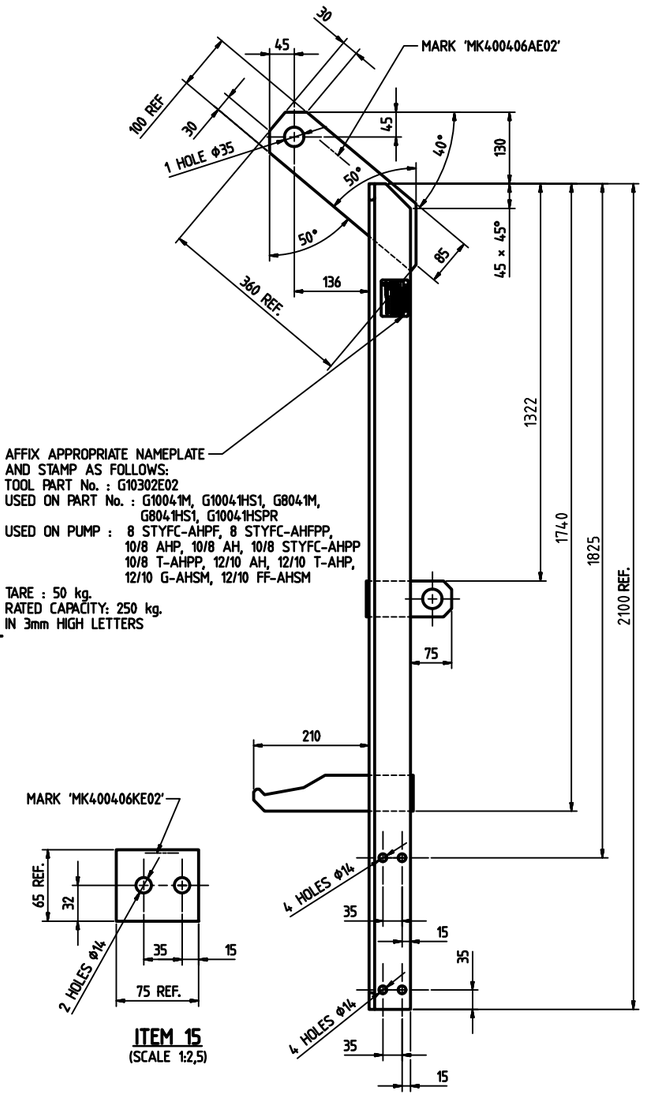

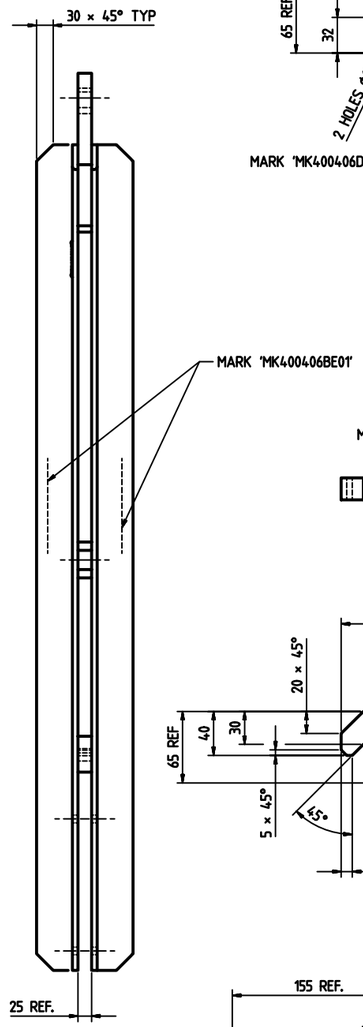

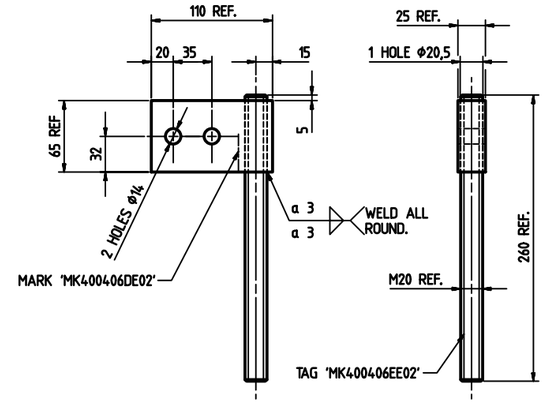

ITEM 6, 7
(SCALE 1:2,5)

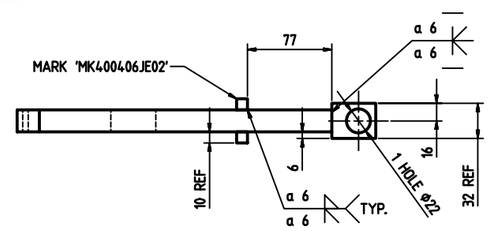

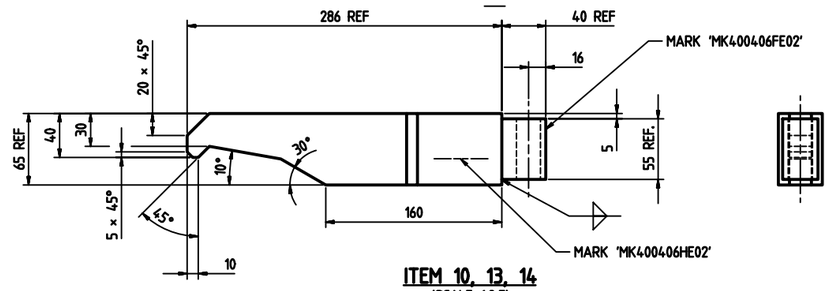

ITEM 10, 13, 14
(SCALE 1:2,5)

ITEM 15
(SCALE 1:2,5)

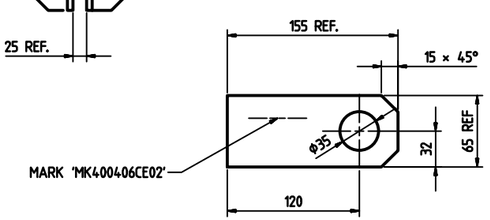

ITEM 5
(SCALE 1:2,5)

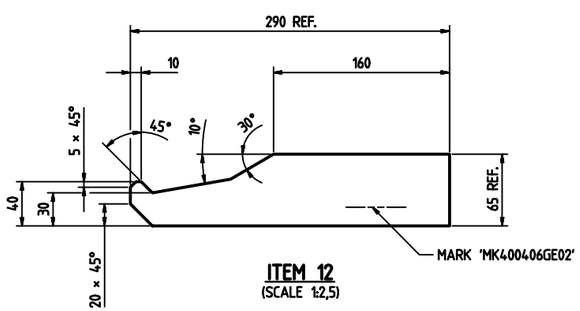

ITEM 12
(SCALE 1:2,5)

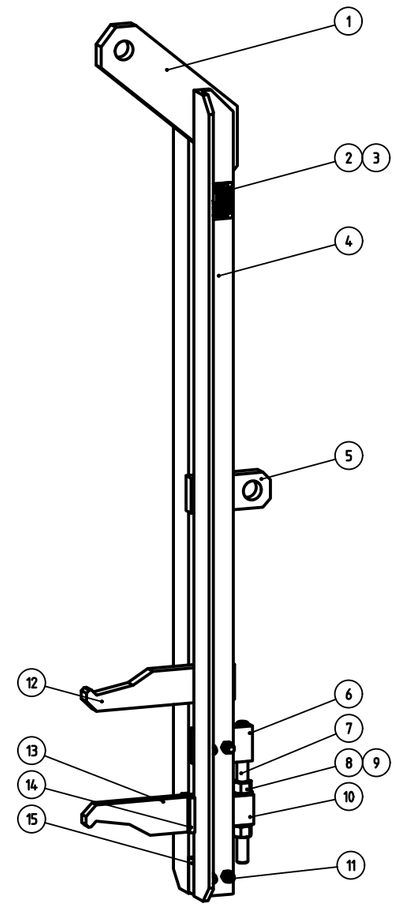

NOTE : 1. ALL WELDS TO BE 6mm CONTINUOUS FILLET, UNLESS OTHERWISE SPECIFIED, TO SEAL ALL OVER AND CONFORM TO WELDING CODE - ISO 5817 QUALITY GRADE B.

2. ALL WELDS TO BE EXAMINED IN ACCORDANCE WITH ISO 17635 MT p100.

3. REMOVE ALL BURRS AND SHARP EDGES.

4. PAINTING : APPLY ONE COAT OF SUITABLE PRIMER THEN ONE COAT OF YELLOW OIL PAINT. AFFIX NAMEPLATE AFTER PAINTING.

MATERIAL : WARMAN CODE E02 UNLESS OTHERWISE SPECIFIED.

ESTIMATED MASS : 50 kg.

ENCUMBRANCE : 1630 x 335 x 175

REV	DESCRIPTION	BY	DATE	CHK
5				
4				
7				
6				

FOR LIMITS OF UNTOLERANCED DIMENSIONS REFER TO DRG. A4-15895.

OFFICE OF ORIGIN :
PUMP TECHNOLOGY CENTRE SYDNEY

Copyright © Weir Minerals Australia Ltd. 2000
Weir Minerals Australia Ltd ("the Company") is the owner of the copyright and all confidential information in this drawing.
The drawing must not be copied in whole or in part, in any form or by any means, and the information in it must not be disclosed to any person, or used for any purpose other than the specific purpose for which it was been provided, without the prior written consent of the Company.

SCALE: 1:5
CHK: ASC
APP: MO
DRN: JOSE GARCIA
DATE: 10/MAR/2022
SHEET 1 OF 1

TITLE :
FRAME PLATE LINER INSERT LIFTING BEAM G10302E02-L

DRAWING No WM220319201001
REV 0