General Dimension Tolerance			
0 ~ 4	± 0.1	16 ~ 63	± 0.3
4 ~ 16	± 0.2	63 ~	± 0.5

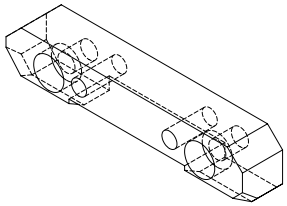

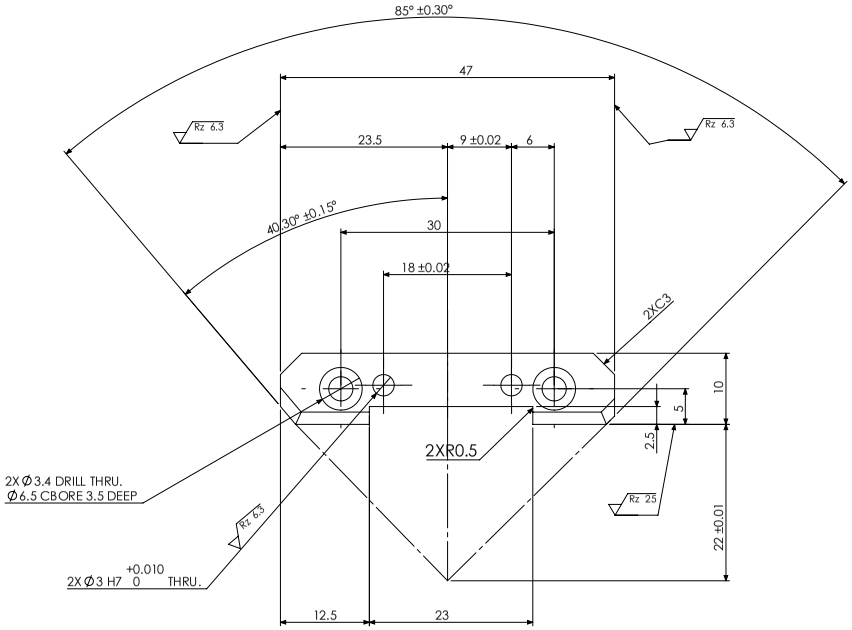

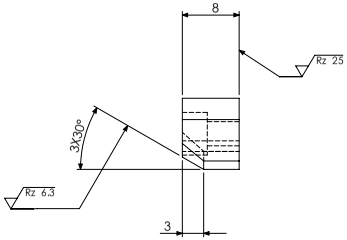

NOTE: ALL EDGES MUST BE C0.5 UNLESS OTHERWISE SPICIFIED

Rz 100 (Rz 25 Rz 6.3)

SURFACE TREATMENT	HEAT TREATMENT	WEIGHT	
MICr-20 ± 4μm ALL PART			
MATERIAL :	RESEMBLANCE PART No..	INFO CODE	I/O CODE
HPM1 (AISIP 21)			
PART NAME GUIDE			
DENSO MEXICO	DWG NO. M-1059926-020	A2	A3P CODE / SHEET 1 OF 1
APPROVED / CHECKED / CHECKED / DISSIGNED / DRAWN	QTY.: 1	No.: 2	SCALE:5:1

CONFIDENTIAL