General Dimension Tolerance			
0 ~ 4	±0.1	16 ~ 63	±0.3
4 ~ 16	±0.2	63 ~	±0.5

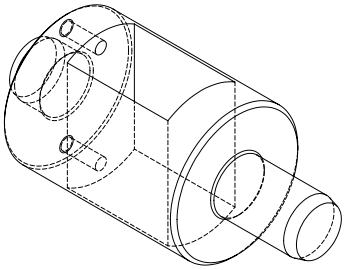

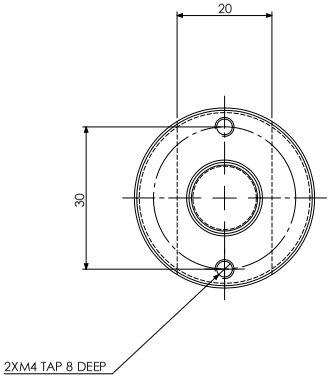

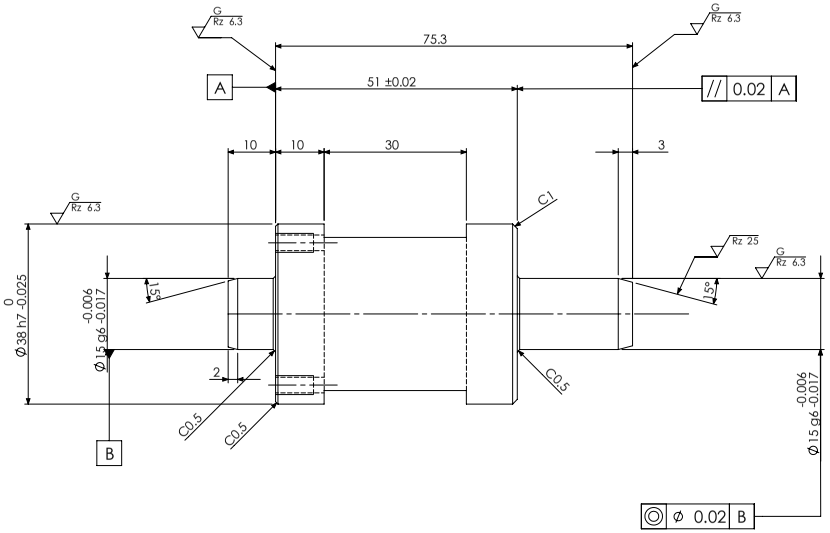

NOTE: ALL EDGES MUST BE C0.5 UNLESS OTHERWISE

Rz 100 (Rz 25 G Rz 6.3)

SURFACE TREATMENT	HEAT TREATMENT	WEIGHT
MICr-20±4μm	HRC 57-64	
ALL PART	QT	
MATERIAL:	RESEMBLANCE PART No..	INFO CODE / I/O CODE
SKS3 (AISI 01)		
PART NAME: PIN		
DENSO MEXICO	DWG NO. M-1059916-040	A2 / A3P CODE / SHEET 1 OF 1
APPROVED / CHECKED / CHECKED / DISIGNED / DRAWN	QTY.: 1	No.: 4 / SCALE:2:1

CONFIDENTIAL