NAME	DATE	TIME (HRS)

TAG	X LOC	Y LOC	SIZE
A1	-141.93	-157.80	∅9.00 THRU
A2	-141.93	157.80	
A3	141.93	-157.80	
A4	141.93	157.80	
B1	-141.93	-157.80	∅9.00 THRU ⌴ ∅15.00 ↧ 8.00
B2	-141.93	157.80	
B3	141.93	-157.80	
B4	141.93	157.80	
C1	-139.68	-38.50	∅5.00 THRU
C2	-139.68	-13.10	
C3	139.68	-38.50	
C4	139.68	-13.10	

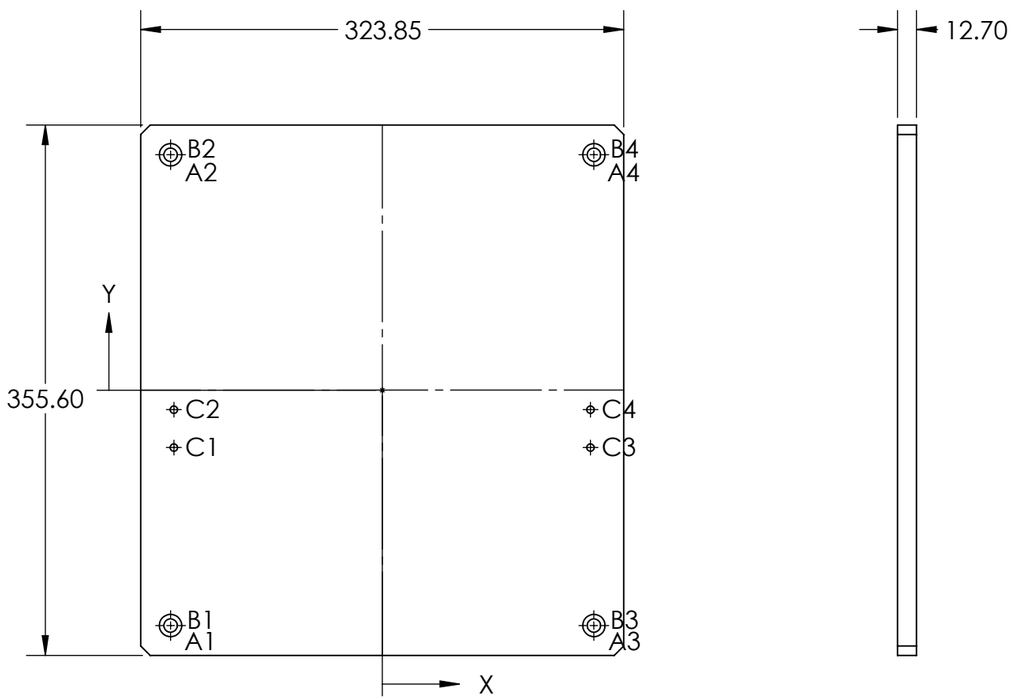

IWM002-TRN-200-001

PAG. 1 de 1

E MEDIDA ESPECIAL

ALL TECHNICAL DATA DISCLOSED HERE IN IS THE PROPERTY OF JOYSON SAFETY SYSTEMS AND SHALL NOT BE USED BY ANY OTHER MANUFACTURER, PROCUREMENT OR DISCLOSURE WITHOUT WRITTEN PERMISSION OF THE OWNMER.

AUTHORIZE | TALLER | QUALITY

NOTES:
Pieza libre de filos y rebabas.

TOTAL OF PIECES: 1 Pza.
ANG. PROF

REV	DESCRIPTION	DATE	APPROVED

REVIEWS

UNLESS OTHERWISE SPECIFIED

TOLERANCES DIMENSIONS	ISO 2768-1 mK-E ASME Y14.5M-1994	
MM	INCHES	ANGLES
+.1 -.1	+.004 -.004	+1° -1°

MATERIAL: 6061 Aluminium
SURFACE TREATMENT: Clear Anodize
HARDNESS: N.A.

JOYSON SAFETY SYSTEMS

APPROVALS		DATE
DESIGNER	JLOV	5/2/2022
REVIEW	RVM	5/2/2022

JOYSON TECHNICAL CENTER

MODEL NAME	IWM002-010	SERIES No	M2022-010
MACHINE NAME	INFLATOR WEIGHT #1		
PART NUMBER	IWM002-TRN-200-001		
SIZE B	PART NAME IWM002-TRN-200-001		REV. A
ESCALE: 1:4		DRAWING IN MILLIMETERS	

JSSAM-JTC-MF-FM-0002-001