General Dimension Tolerance			
0 ~ 4	± 0.1	16 ~ 63	± 0.3
4 ~ 16	± 0.2	63 ~	± 0.5

REVISIONS			
REV.	DESCRIPTION	DATE	APPROVED
1	PE SUGGESTION	31/03/2022	

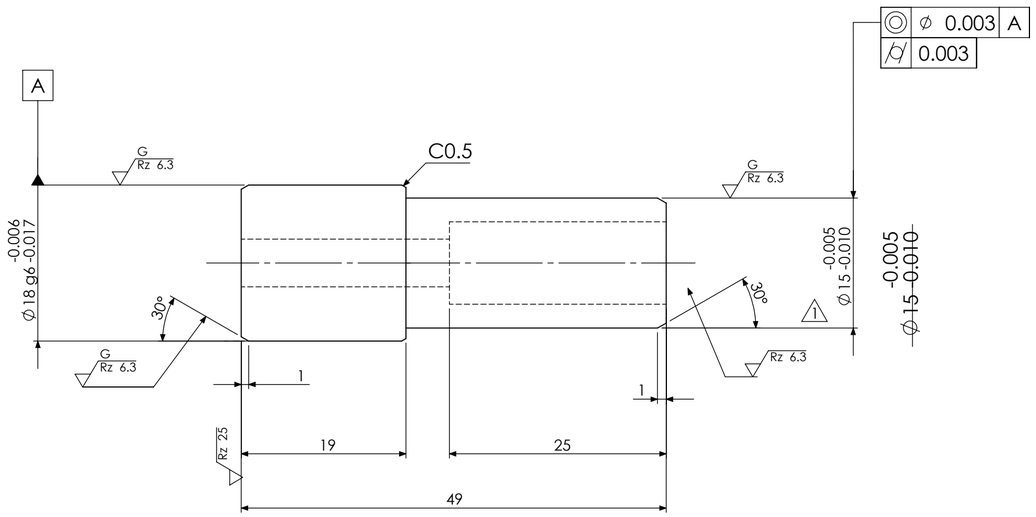

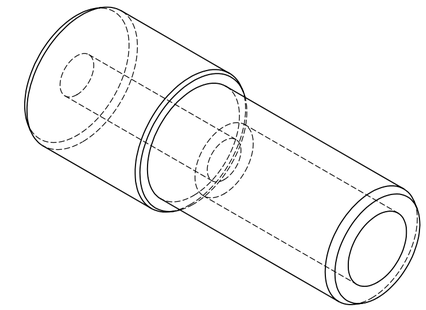

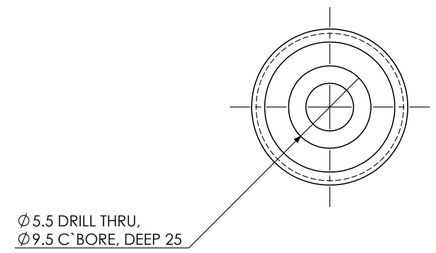

Rz 100 (Rz 25 , Rz 6.3)

NOTE: ALL EDGES MUST BE C0.5 UNLESS OTHERWISE SPECIFIED

SURFACE TREATMENT	HEAT TREATMENT	WEIGHT
MICr-20±4μm	HRC: 57-64	
ALL PART	QT	

MATERIAL:	RESEMBLANCE PART No.	IMPO CODE	I/O CODE
SK 105			

PART NAME: WORKGUIDE

DENSO MEXICO	DWG NO.	A2	ASP CODE	SHEET 1 OF 1
APPROVED / CHECKED / CHECKED / DESIGNED / DRAWN	M-4018231-031			
	QTY.:1	No.:3		SCALE:2:1

CONFIDENTIAL