ITEM	QTY.	MAT'L.	STOCK SIZE
1	1	LOW CARB. HRS	1/4 x 1 1/2 x 32 1/4
2	2	STEEL ANGLE	1 1/4 x 1 1/4 x 1/4

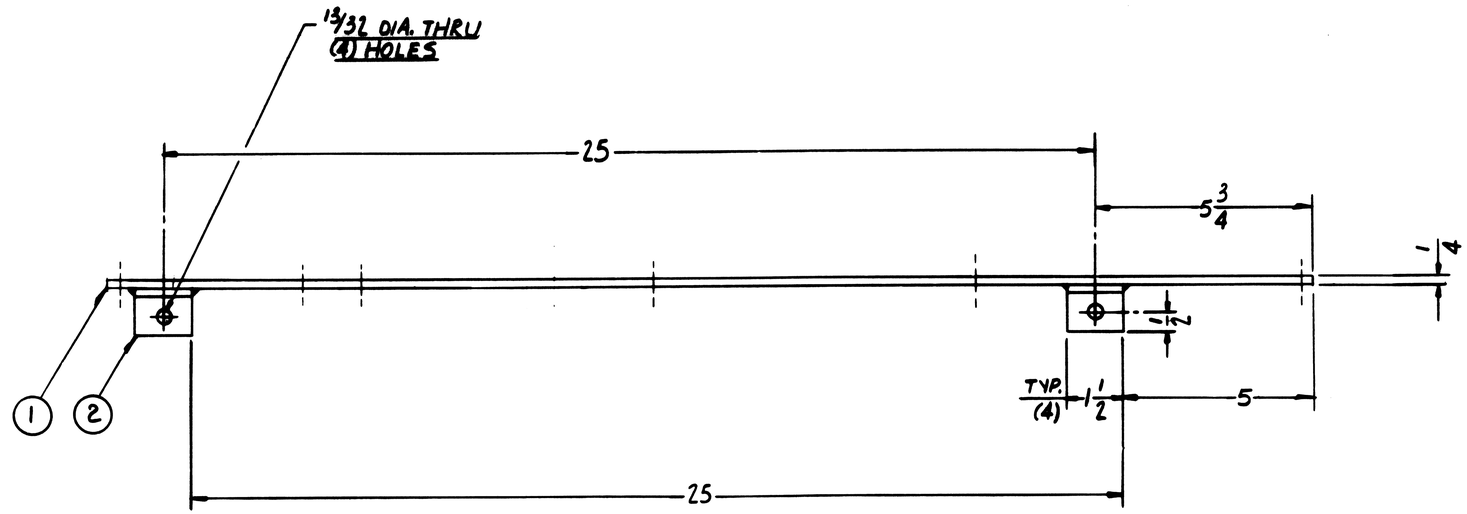

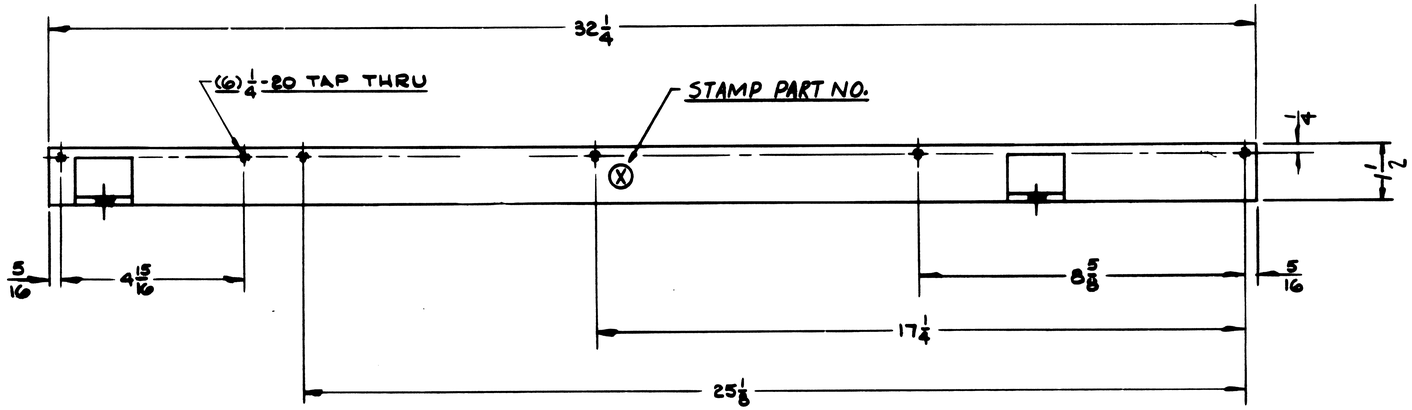

PAINT ONE COAT
DULL BLACK
GRAY PRIMER

"INFORMATION CONTAINED HEREIN CONSTITUTES PROPRIETARY CONFIDENTIAL INFORMATION OF OWENS-ILLINOIS, AND IS TO BE ACCEPTED ONLY SUBJECT TO THAT UNDERSTANDING. IT IS TO BE KEPT CONFIDENTIAL AND NOT COPIED, USED, OR CONVEYED TO OTHERS WITHOUT OWENS-ILLINOIS' WRITTEN AUTHORIZATION."

CHANGES

UNLESS SPECIFIED:
FINISHED SURFACE ROUGHNESS ✓
FINISHED DIMENSIONS – FRACTIONAL ±.015
DECIMAL ±.005
BREAK SHARP EDGES MARK PART NUMBER AT X

NAME LUB. INJECTOR BRACKET
MACH. LEFT END
DRAWN CJW | CHECKED | DATE 2-11-98 | SCALE 1/2
MATERIAL WELDMENT, SEE LIST

[redacted] DRAWING NUMBER
015-43-571
SHEET ____

USED ON ASSEMBLY NO. 015-02484

AUTORIZADO
FECHA DE IMPRESIÓN: 02/03/2022
ADN - ADMINISTRACIÓN DE DIBUJOS NETWORK
Impresión generada por: Jesus Angel García Saldaña