General Dimension Tolerance			
0 ~ 4	± 0.1	16 ~ 63	± 0.3
4 ~ 16	± 0.2	63 ~	± 0.5

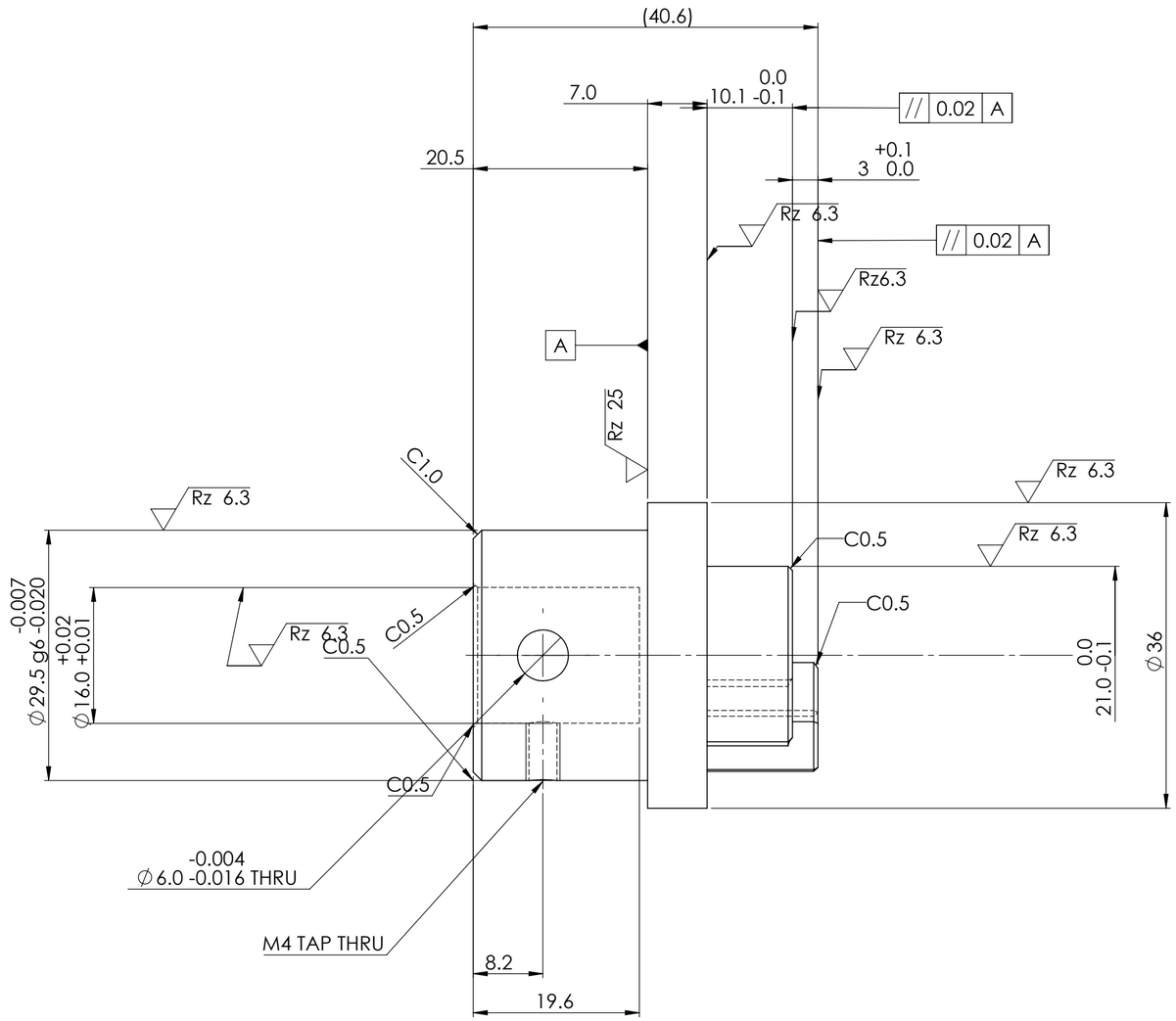

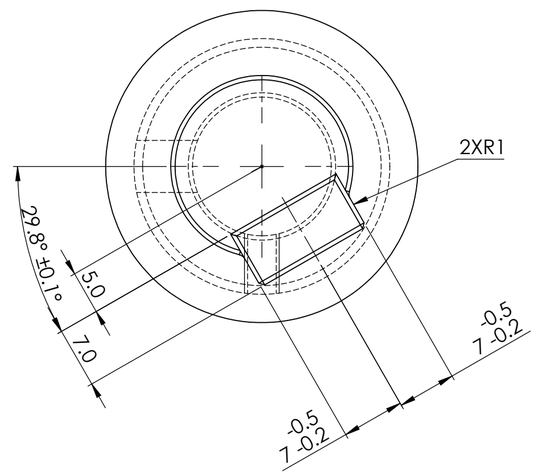

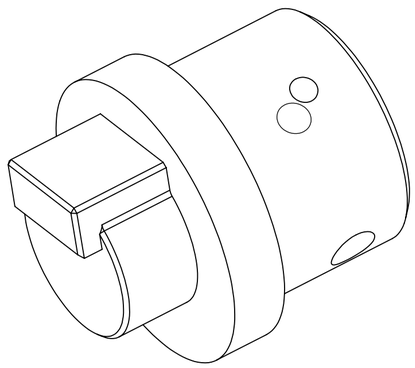

NOTE: DIMENSION AFTER PLATING Rz 100 (G Rz 6.3)

SURFACE TREATMENT	HEAT TREATMENT	WEIGHT
MICr-20 +/- 4 µm ALL PART	HRC 61~63 QT	

MATERIAL:	RESEMBLANCE PART No.	IMPO CODE	I/O CODE
SKD11 (ASTM A681 D2)			

PART NAME: PUNCH

DENSO MEXICO

APPROVED	CHECKED	CHECKED	DESIGNED	DRAWN	DWG NO.	A2	ASP CODE	SHEET 1 OF 1
				FRANCISCO CARRIZALES	M-4071750-040			
					QTY.: 1	No.: 4		SCALE:2:1

CONFIDENTIAL