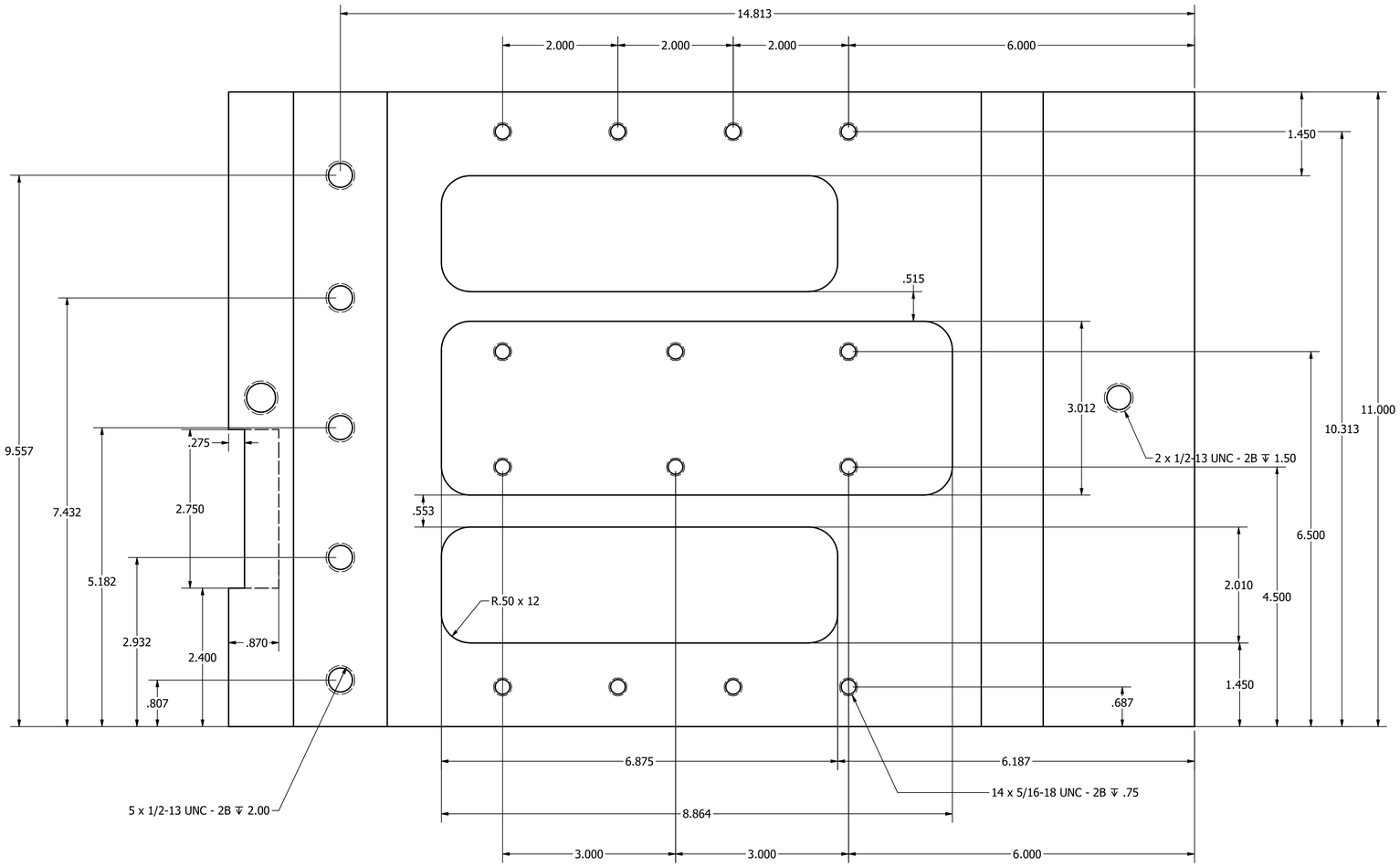

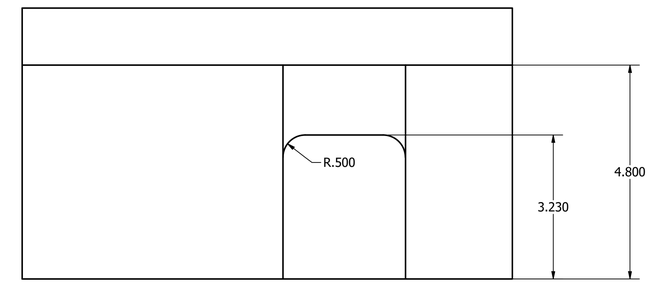

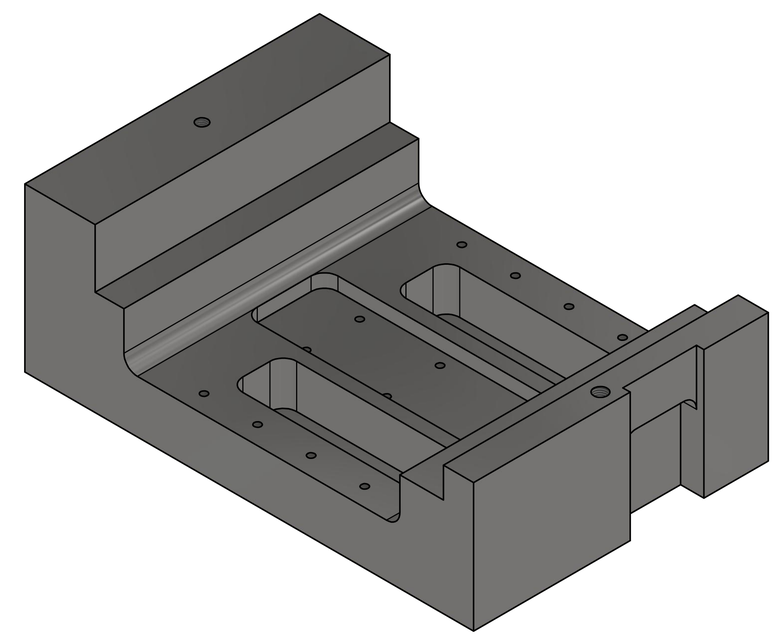

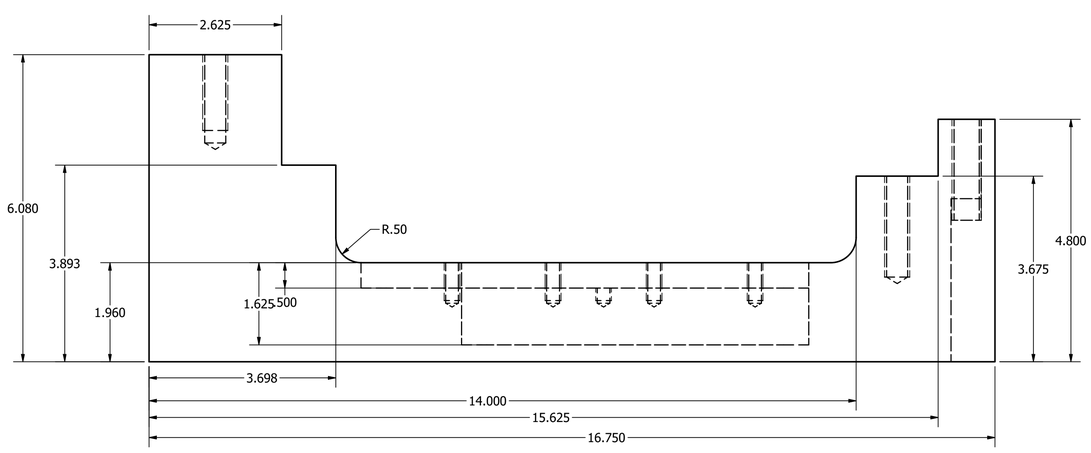

DRAWN Jesús Torres	28/03/2022	Ice Industries Mexico
CHECKED Juan Fco. Cano		TITLE 41516 - 4620046
QA		
MFG		
APPROVED		SIZE D / DWG NO 41516 - 4620046 / REV
		SCALE 1 / 1.5 / SHEET 1 OF 1