NAME	DATE	TIME (HRS)

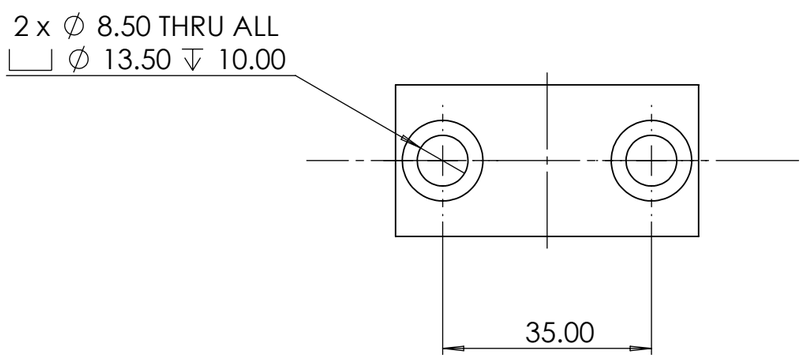

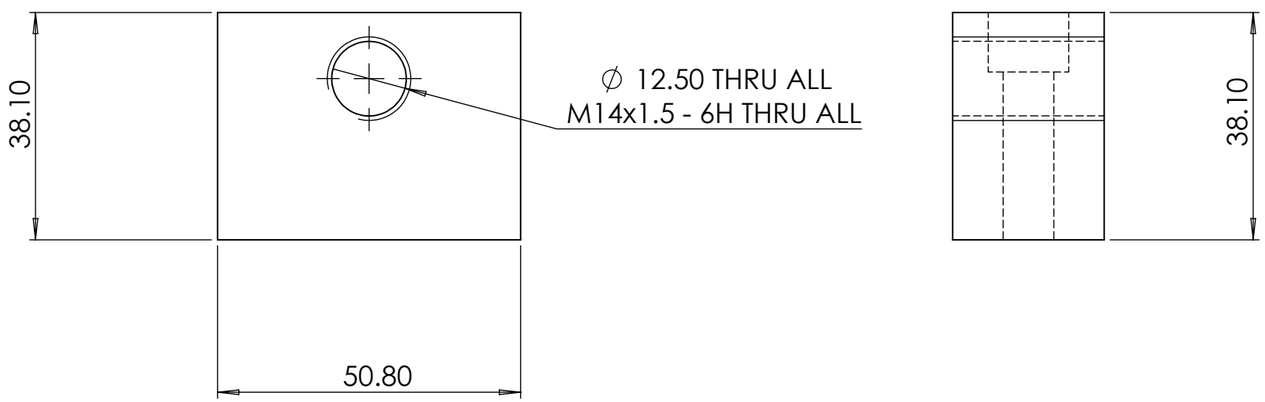

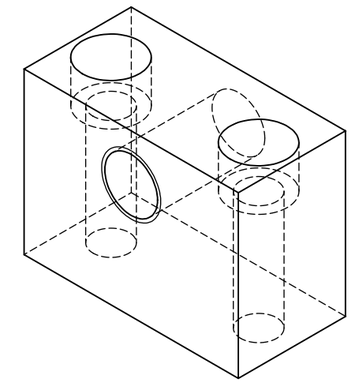

FM002-MVA-100-015

PAG. 1 de 1

E MEDIDA ESPECIAL

ALL TECHNICAL DATA DISCLOSED HERE IN IS THE PROPERTY OF JOYSON SAFETY SYSTEMS AND SHALL NOT BE USED BY ANY OTHER MANUFACTURER, PROCUREMENT OR DISCLOSURE WITHOUT WRITTEN PERMISSION OF THE OWNMER.

NOTES:

Pieza libre de filos y rebabas.

TOTAL OF PIECES	6 Pza.
ANG. PROF	

REV	DESCRIPTION	DATE	APPROVED

REVIEWS

UNLESS OTHERWISE SPECIFIED

TOLERANCES DIMENSIONS	ISO 2768-1 mK-E ASME Y14.5M-1994	
MM	INCHES	ANGLES
+.1 -.1	+.004 -.004	+1° -1°

MATERIAL:	6061 ALUMINUM
SURFACE TREATMENT	PULIDO
HARDNESS	

JOYSON SAFETY SYSTEMS

APPROVALS		DATE
DESIGNER	JMM	4/14/2022
REVIEW	JEC	4/14/2022

JOYSON TECHNICAL CENTER

MODEL NAME	FM002-MVA	SERIES No	M2022-007
MACHINE NAME	Folding Machine Canoo CAB 3Row		
PART NUMBER	FM002-MVA-100-015		
SIZE **B**	PART NAME BLOQUE DE TOPE		REV.
ESCALE: 2:1		DRAWING IN MILLIMETERS	

AUTHORIZE	TALLER	QUALITY

JSSAM-JTC-MF-FM-0002-001