General Dimension Tolerance			
0 ~ 4	±0.1	16 ~ 63	±0.3
4 ~ 16	±0.2	63 ~	±0.5

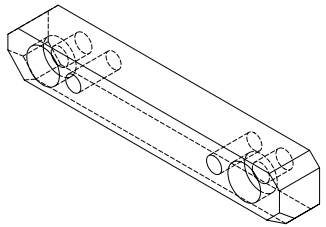

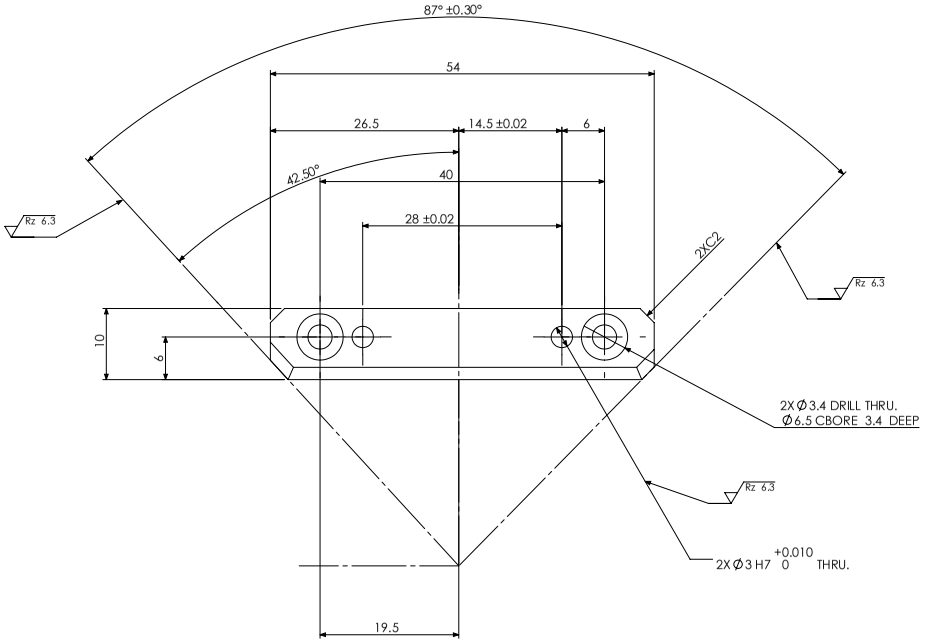

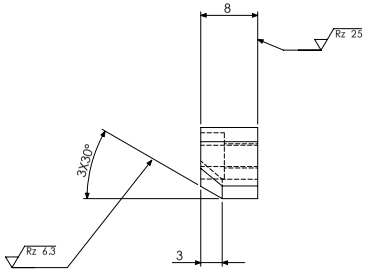

NOTE: ALL EDGES MUST BE C0.5 UNLESS OTHERWISE SPECIFIED

Rz 100 (Rz 25 Rz 6.3)

SURFACE TREATMENT	HEAT TREATMENT	WEIGHT
MICr-20±4μm ALL PART		
MATERIAL: HPM1 (AISIP 21)	RESEMBLANCE PART No.:	INFO CODE / I/O CODE
PART NAME: GUIDE		
DENSO MEXICO	DWG NO. M-1059916-010	A2 / A3P CODE / SHEET 1 OF 1
APPROVED / CHECKED / CHECKED / DISSIGNED / DRAWN	QTY.: 1 No.: 1	SCALE:5:1

CONFIDENTIAL