General Dimension Tolerance			
0 ~ 4	± 0.1	16 ~ 63	± 0.3
4 ~ 16	± 0.2	63 ~	± 0.5

REVISIONES			
REV.	DESCRIPCIÓN	FECHA	APROBADO
1	CHANGE MATERIAL	7/1/2022	DS

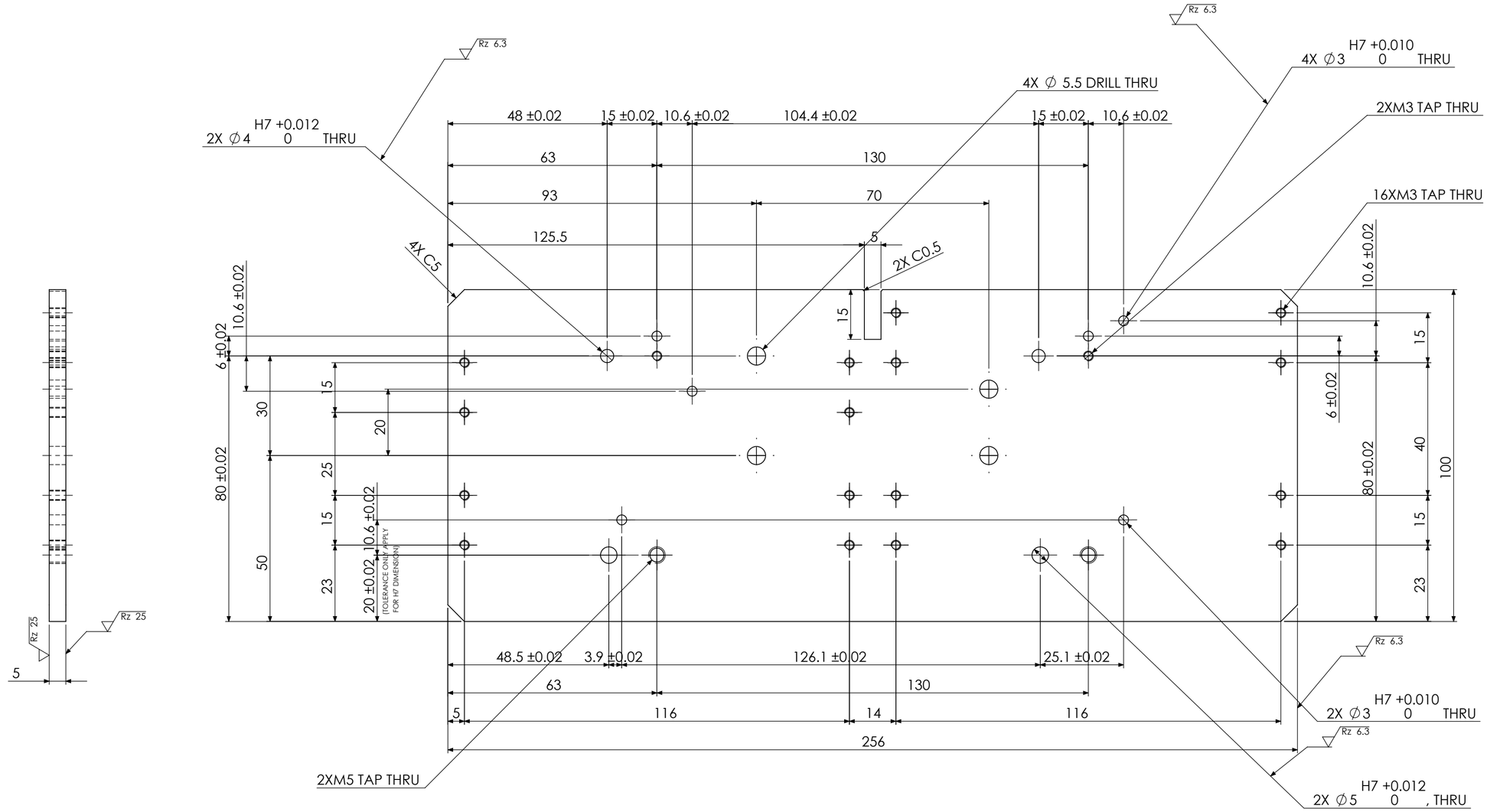

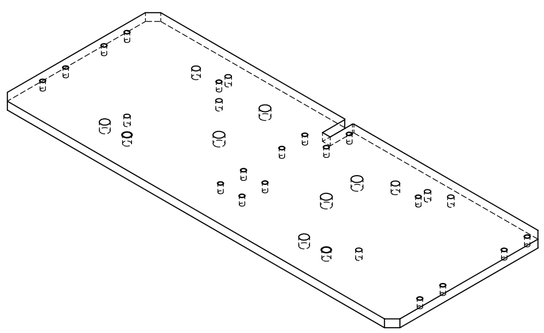

Rz 100 (Rz 25)

NOTE: UNLESS OTHERWISE SPECIFIED CHAMFER ALL CORNERS TO C0.5

SURFACE TREATMENT	HEAT TREATMENT	WEIGTH

MATERIAL:	RESEMBLANCE PART No.	IMPO CODE	I/O CODE
1 SUS303 (AISI 303)			

PART NAME: PLATE

DENSO MEXICO

APPROVED	CHECKED	CHECKED	DESIGNED	DRAWN

DWG NO. M-2321183-041 | A2 | ASP CODE | SHEET 1 OF 1

QTY.: 1 | No.: 4 | SCALE:1:2

CONFIDENTIAL