Stock List			
ITEM	QTY	MATERIAL	DESCRIPTION
SO_MS	4	HRS	3/16" THK x 239mm x 351.1mmLG

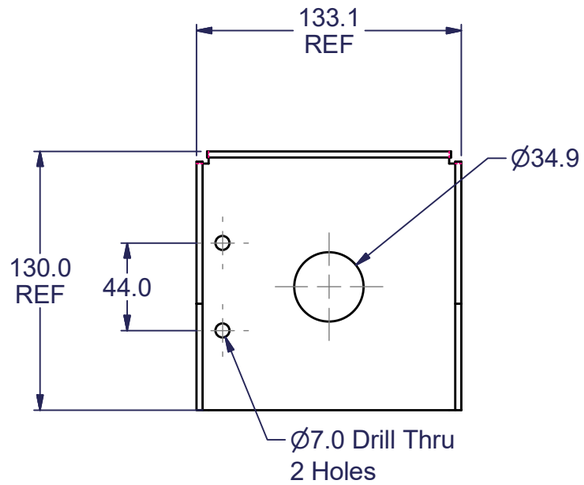

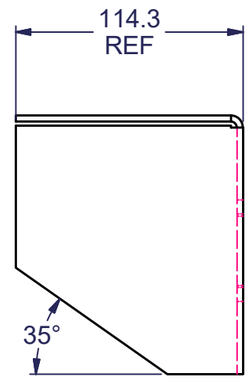

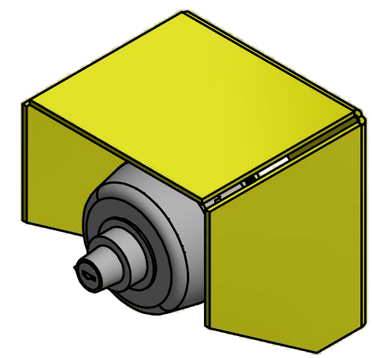

NOTE: PAINT YELLOW RAL 1023

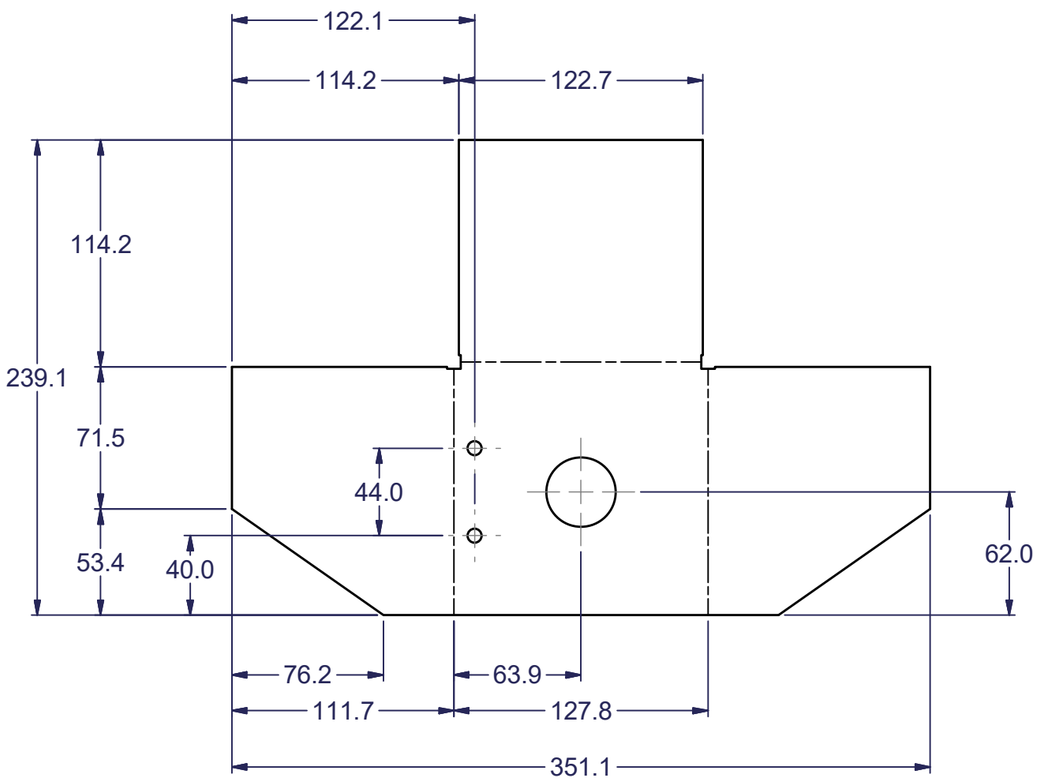

FLAT PATTERN

COSMA INNOVATIVE MANUFACTURING SOLUTIONS

REV	CHANGE	CHK'D	DATE

UNIT No.:	7
WEIGHT (KG):	N/A

COTO: COTO202024

THIS MATERIAL IS PROPERTY OF MAGNA COSMA INTERNATIONALNO RIGHTS ARE GRANTEDTO USE SUCH MATERIAL FOR ANY PURPOSE OTHER THAN FURNISHING OF SERVICES AND SUPPLIES

DESIGN SOURCE	BUILD SOURCE	CUSTOMER
MAGNA	MAGNA	DRIVE

DESIGNER	DETAILER	
M Gonzalez	M Gonzalez	3RD ANGLE PROYECTION

PROJECT MGR.	DESIGN SUP.	CHECKER
Tomas López	CMontesdeOca	CMontesdeOca

SYSTEM NAME
DRIVE_VOLVO- CAR V536

DESCRIPTION
2104_Maintainance Switch Ángle

SCALE	SHEET	RELEASE DATE
NONE	1 OF 2	12/2/2021

DRAWING No.
SHOWN
2104_Guarda Maintainance Switch
OPPOSITE

O:\Projects\2021-04-DRIVE_VOLVO- CAR V536\03 System Level\3.6 Manufacturing\3.6.4 Bases & Frames\3.6.4.11 Guarda Maintainance Switch\FID-08-1 2104_Guarda Maintainance Switch.idw

Aplica:CIMS FID-08-1, VER.3
Resp: L. Luna Fecha: 10/07/2020