General Dimension Tolerance			
0 ~ 4	± 0.1	16 ~ 63	± 0.3
4 ~ 16	± 0.2	63 ~	± 0.5

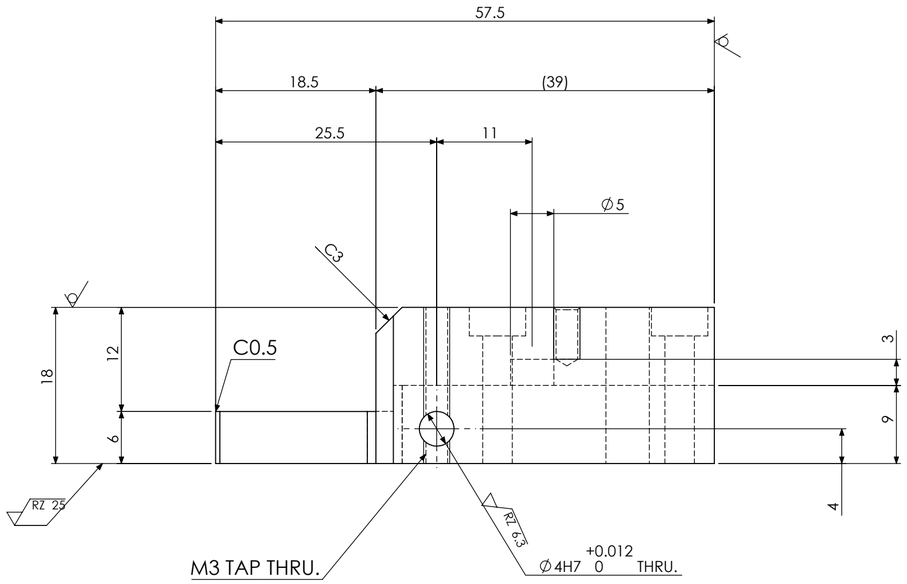

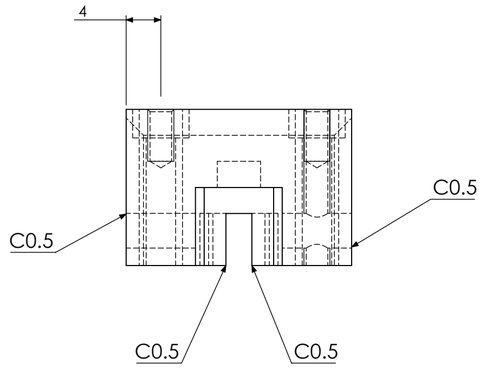

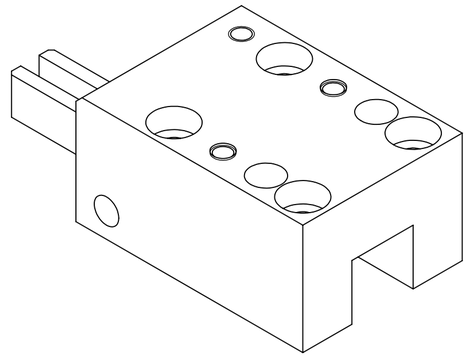

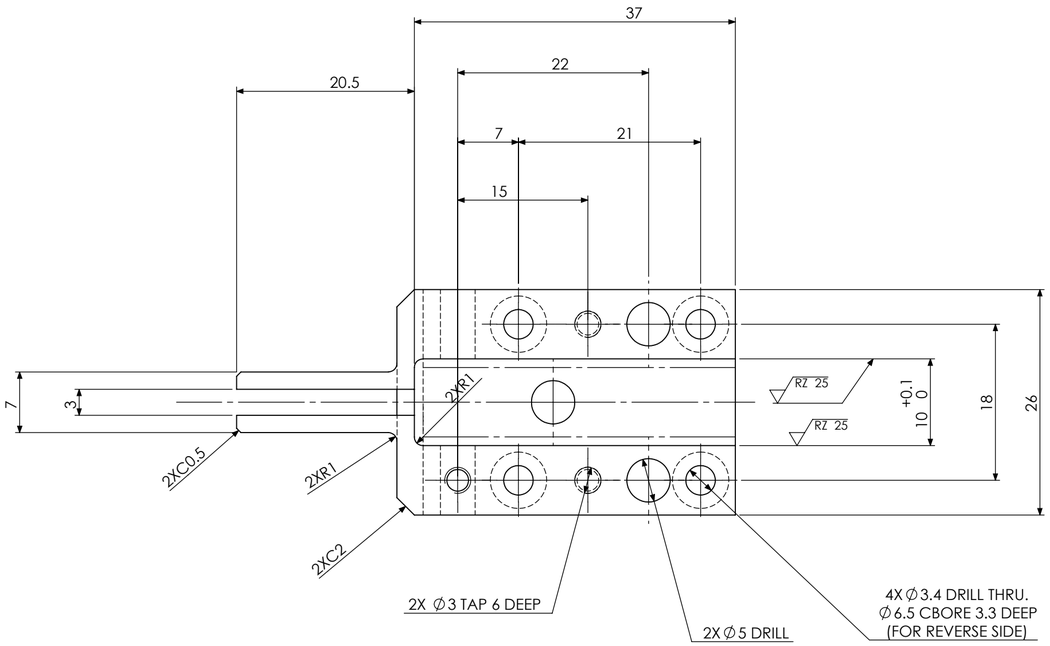

RZ 100 (RZ 25 RZ 6.3)

SURFACE TREATMENT	HEAT TREATMENT	WEIGHT	
MICr-20 ± 4μm ALL PART			
MATERIAL:	RESEMBLANCE PART No.	IMPO CODE	I/O CODE
HPM1 AISI P21			
PART NAME GUIDE			
DENSO MEXICO	DWG NO. M-2931962-070	A2	ASP CODE / SHEET 1 OF 1
APPROVED / CHECKED / CHECKED / DESIGNED / DRAWN	QTY.: 1	No.: 7	SCALE:2:1

CONFIDENTIAL