NAME	DATE	TIME (HRS)

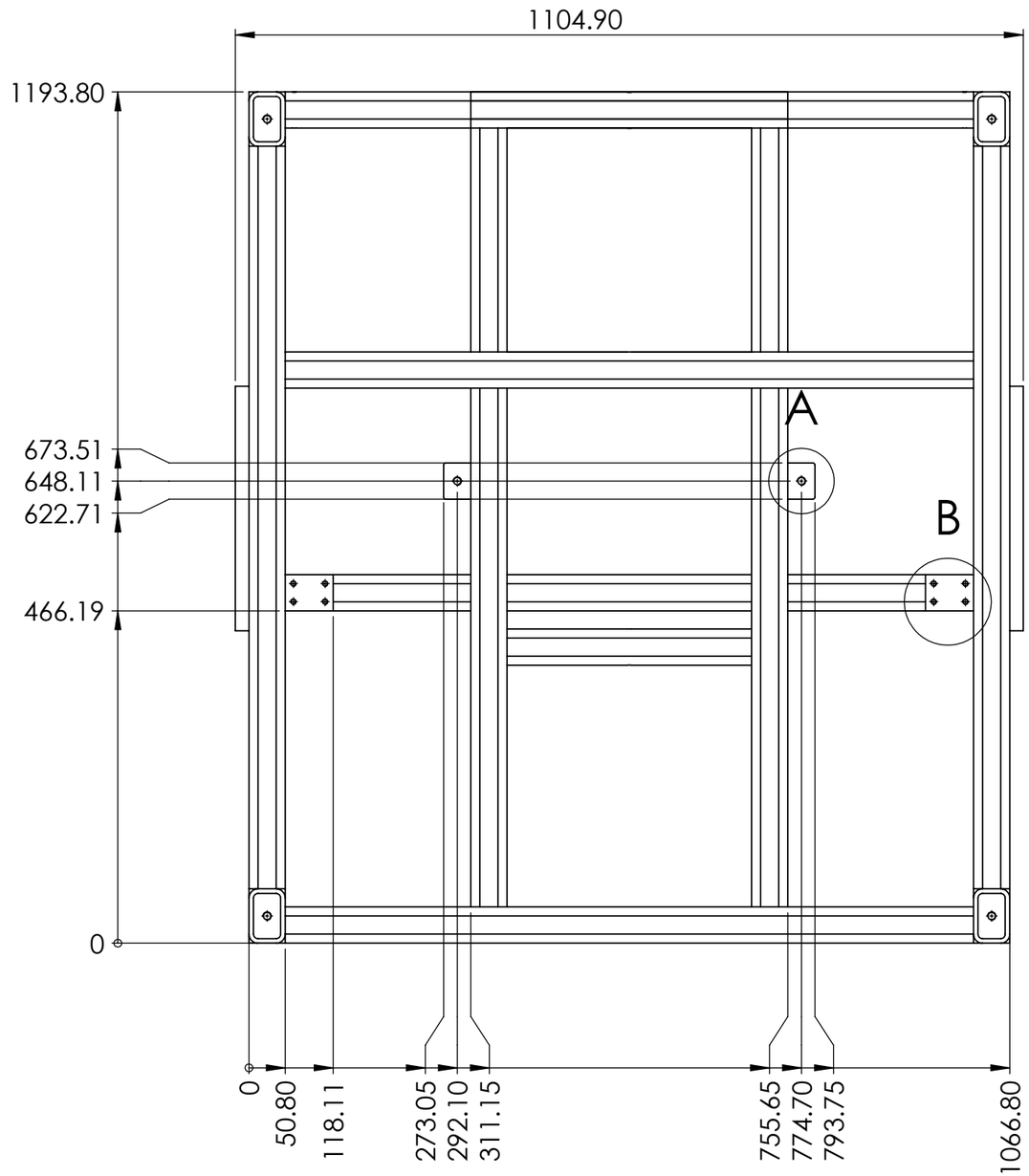

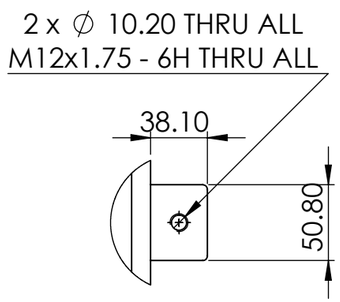

DETAIL A
SCALE 1 : 4

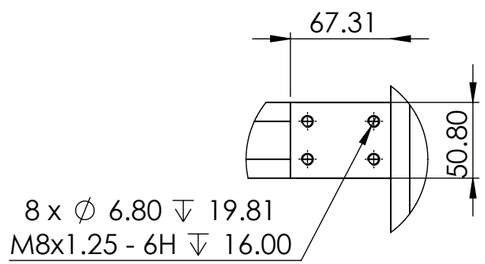

DETAIL B
SCALE 1 : 4

PFM009-MVA-100-001

PAG. 1 de 4

E MEDIDA ESPECIAL

ALL TECHNICAL DATA DISCLOSED HERE IN IS THE PROPERTY OF JOYSON SAFETY SYSTEMS AND SHALL NOT BE USED BY ANY OTHER MANUFACTURER, PROCUREMENT OR DISCLOSURE WITHOUT WRITTEN PERMISSION OF THE OWNMER.

JOYSON
EQUIPO AUTOMOTRIZ AMERICANA S.A. DE C.V.
BOLSAS DE AIRE
NOMBRE: RM
FIRMA:

AUTHORIZE | TALLER | QUALITY

NOTES:
Pieza libre de filos y rebabas.

TOTAL OF PIECES	1 Pza.
ANG. PROF	

REV	DESCRIPTION	DATE	APPROVED

REVIEWS

UNLESS OTHERWISE SPECIFIED

TOLERANCES DIMENSIONS	ISO 2768-1 mK-E ASME Y14.5M-1994	
MM	INCHES	ANGLES
+.1 -.1	+.004 -.004	+1° -1°

MATERIAL: PTR 0.25"X2"X3"

SURFACE TREATMENT: COLOR JOYSON

HARDNESS

JOYSON SAFETY SYSTEMS

APPROVALS		DATE
DESIGNER	ABG	1/31/2022
REVIEW	JEC	1/31/2022

JOYSON TECHNICAL CENTER

MODEL NAME	PFM009-MVA	SERIES No	M2022-003
MACHINE NAME	QCF- VOVLO DAB		
PART NUMBER	PFM009-MVA-100-001		
SIZE **B**	PART NAME PFM002-TRN-001.B		REV. **A**
ESCALE: 1:20		DRAWING IN MILLIMETERS	

JSSAM-JTC-MF-FM-0002-001

NAME	DATE	TIME (HRS)

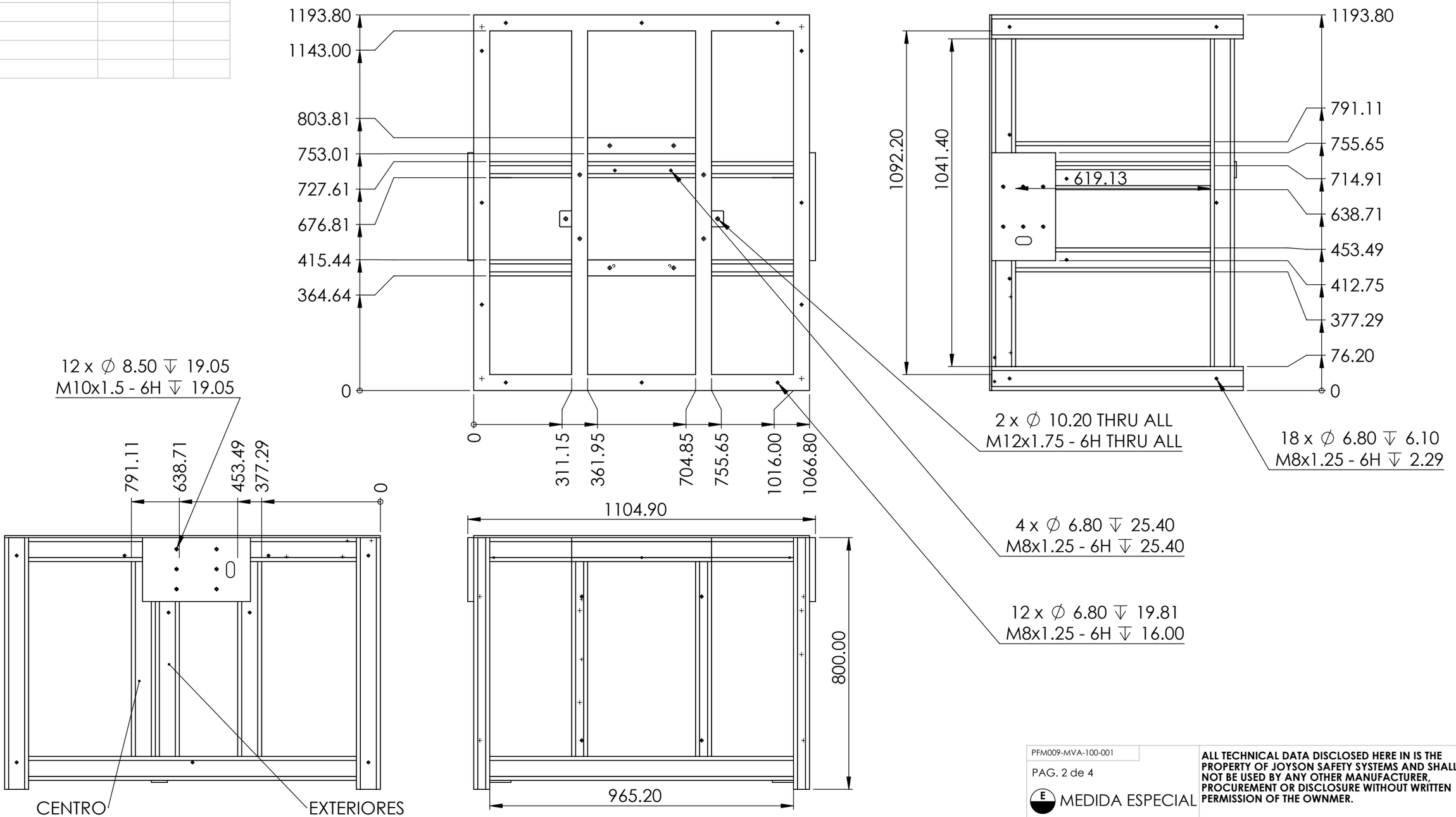

PFM009-MVA-100-001

PAG. 2 de 4

E MEDIDA ESPECIAL

ALL TECHNICAL DATA DISCLOSED HERE IN IS THE PROPERTY OF JOYSON SAFETY SYSTEMS AND SHALL NOT BE USED BY ANY OTHER MANUFACTURER, PROCUREMENT OR DISCLOSURE WITHOUT WRITTEN PERMISSION OF THE OWNMER.

JOYSON
EQUIPO AUTOMOTRIZ AMERICANA S.A. DE C.V.
BOLSAS DE AIRE
NOMBRE: RM
FIRMA:

AUTHORIZE | TALLER | QUALITY

NOTES:
Pieza libre de filos y rebabas.

TOTAL OF PIECES	1 Pza.
ANG. PROF	

REV	DESCRIPTION	DATE	APPROVED

REVIEWS

UNLESS OTHERWISE SPECIFIED

TOLERANCES DIMENSIONS	ISO 2768-1 mK-E ASME Y14.5M-1994	
MM	INCHES	ANGLES
+.1 -.1	+.004 -.004	+1° -1°

MATERIAL:	PTR 0.25"X2"X3"
SURFACE TREATMENT	Color "Takata"
HARDNESS	

JOYSON SAFETY SYSTEMS

APPROVALS		DATE
DESIGNER	ABG	1/31/2022
REVIEW	RVM	1/31/2022

JOYSON TECHNICAL CENTER

MODEL NAME	PFM009-MVA	SERIES No	M2022-003
MACHINE NAME	QCF- VOVLO DAB		
PART NUMBER	PFM009-MVA-100-001		
SIZE **B**	PART NAME PFM002-TRN-001.B		REV. **A**
ESCALE: 1:20		DRAWING IN MILLIMETERS	

JSSAM-JTC-MF-FM-0002-001

ITEM NO.	QTY.	DESCRIPTION	LENGTH
1	1	TUBE, RECTANGULAR 76.20 X 50.80 X 6.35	1041.4
2	1	TUBE, RECTANGULAR 76.20 X 50.80 X 6.35	444.5
3	2	TUBE, RECTANGULAR 76.20 X 50.80 X 6.35	1092.2
4	1	TUBE, RECTANGULAR 76.20 X 50.80 X 6.35	965.2
5	2	TUBE, RECTANGULAR 76.20 X 50.80 X 6.35	342.9
6	1	TUBE, RECTANGULAR 76.20 X 50.80 X 6.35	800
7	1	TUBE, RECTANGULAR 76.20 X 50.80 X 6.35	619.13
8	1	TUBE, RECTANGULAR 76.20 X 50.80 X 6.35	727.61
9	2	TUBE, RECTANGULAR 76.20 X 50.80 X 6.35	260.35
10	2		
11	4		
12	2		
	1		
14	2		
15	3	TUBE, RECTANGULAR 76.20 X 50.80 X 6.35	800
16	1	TUBE, RECTANGULAR 76.20 X 50.80 X 6.35	965.2
17	2	TUBE, RECTANGULAR 76.20 X 50.80 X 6.35	1041.4
18	2	TUBE, RECTANGULAR 76.20 X 50.80 X 6.35	619.13
19	1	TUBE, RECTANGULAR 76.20 X 50.80 X 6.35	727.61
20	1	TUBE, RECTANGULAR 76.20 X 50.80 X 6.35	444.5
21	1	TUBE, RECTANGULAR 76.20 X 50.80 X 6.35	965.2
22	1	TUBE, RECTANGULAR 76.20 X 50.80 X 6.35	619.13
23	1	TUBE, RECTANGULAR 76.20 X 50.80 X 6.35	619.13
24	1	TUBE, RECTANGULAR 76.20 X 50.80 X 6.35	619.13
25	1	TUBE, RECTANGULAR 76.20 X 50.80 X 6.35	965.2
26	1	TUBE, RECTANGULAR 76.20 X 50.80 X 6.35	342.9
27	1		
28	1	TUBE, RECTANGULAR 76.20 X 50.80 X 6.35	1168.4

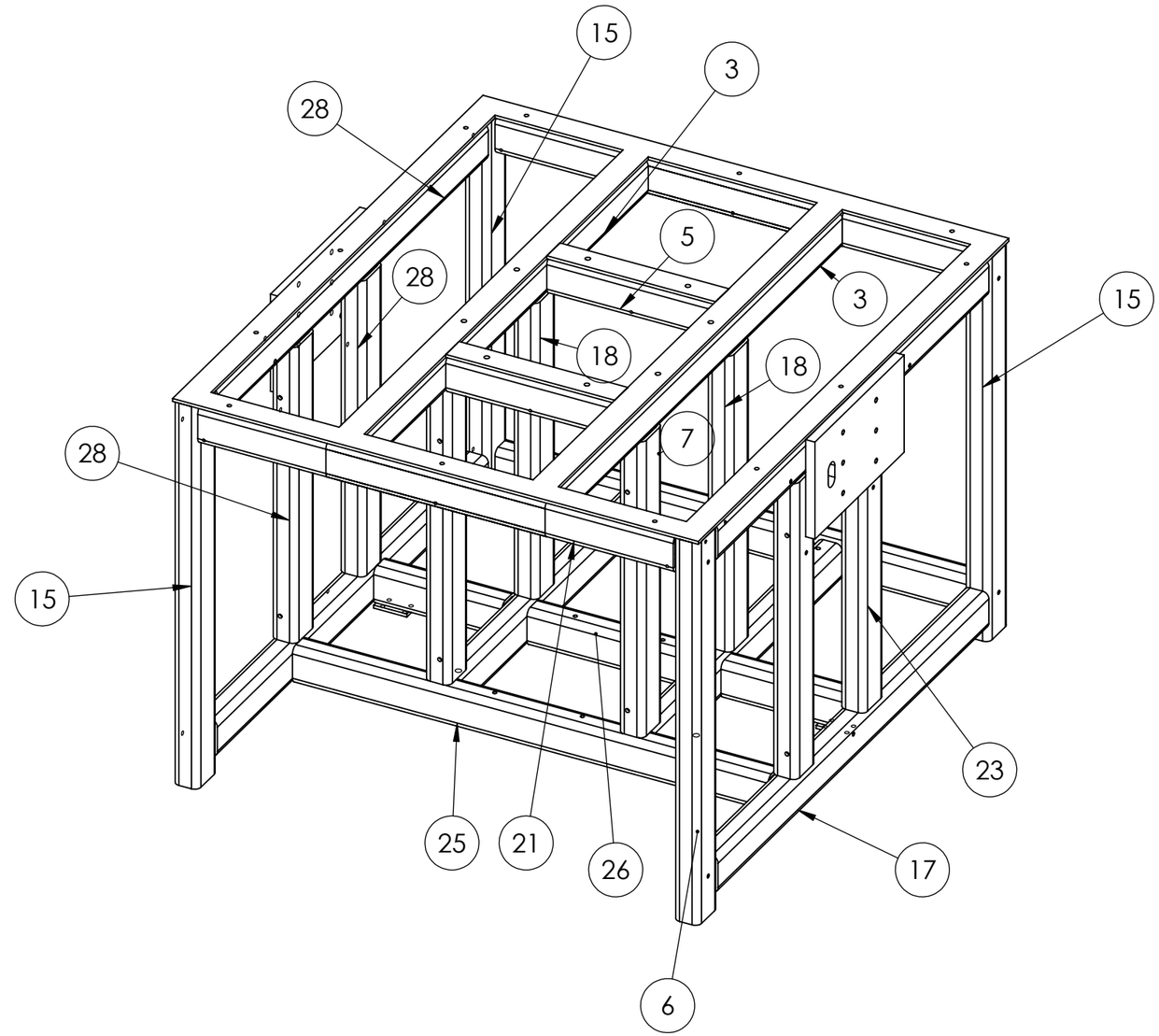

PFM009-MVA-100-001

PAG. 3 de 4

E MEDIDA ESPECIAL

ALL TECHNICAL DATA DISCLOSED HERE IN IS THE PROPERTY OF JOYSON SAFETY SYSTEMS AND SHALL NOT BE USED BY ANY OTHER MANUFACTURER, PROCUREMENT OR DISCLOSURE WITHOUT WRITTEN PERMISSION OF THE OWNMER.

JOYSON
EQUIPO AUTOMOTRIZ AMERICANA S.A. DE C.V.
BOLSAS DE AIRE
NOMBRE: RM
FIRMA:

AUTHORIZE | TALLER | QUALITY

NOTES:
Pieza libre de filos y rebabas.

TOTAL OF PIECES: 1 Pza.
ANG. PROF

REV	DESCRIPTION	DATE	APPROVED

REVIEWS

UNLESS OTHERWISE SPECIFIED

TOLERANCES DIMENSIONS	ISO 2768-1 mK-E ASME Y14.5M-1994	
MM	INCHES	ANGLES
+.1 -.1	+.004 -.004	+1° -1°

MATERIAL: PTR 0.25"X2"X3"
SURFACE TREATMENT: Color Joyson
HARDNESS

JOYSON SAFETY SYSTEMS

APPROVALS		DATE
DESIGNER	ABG	1/31/2022
REVIEW	RVM	1/31/2022

JOYSON TECHNICAL CENTER

MODEL NAME	PFM009-MVA	SERIES No	M2022-003
MACHINE NAME	QCF- VOVLO DAB		
PART NUMBER	PFM009-MVA-100-001		
SIZE B	PART NAME PFM002-TRN-001.B		REV. A
ESCALE: 1:20		DRAWING IN MILLIMETERS	

JSSAM-JTC-MF-FM-0002-001

NAME	DATE	TIME (HRS)

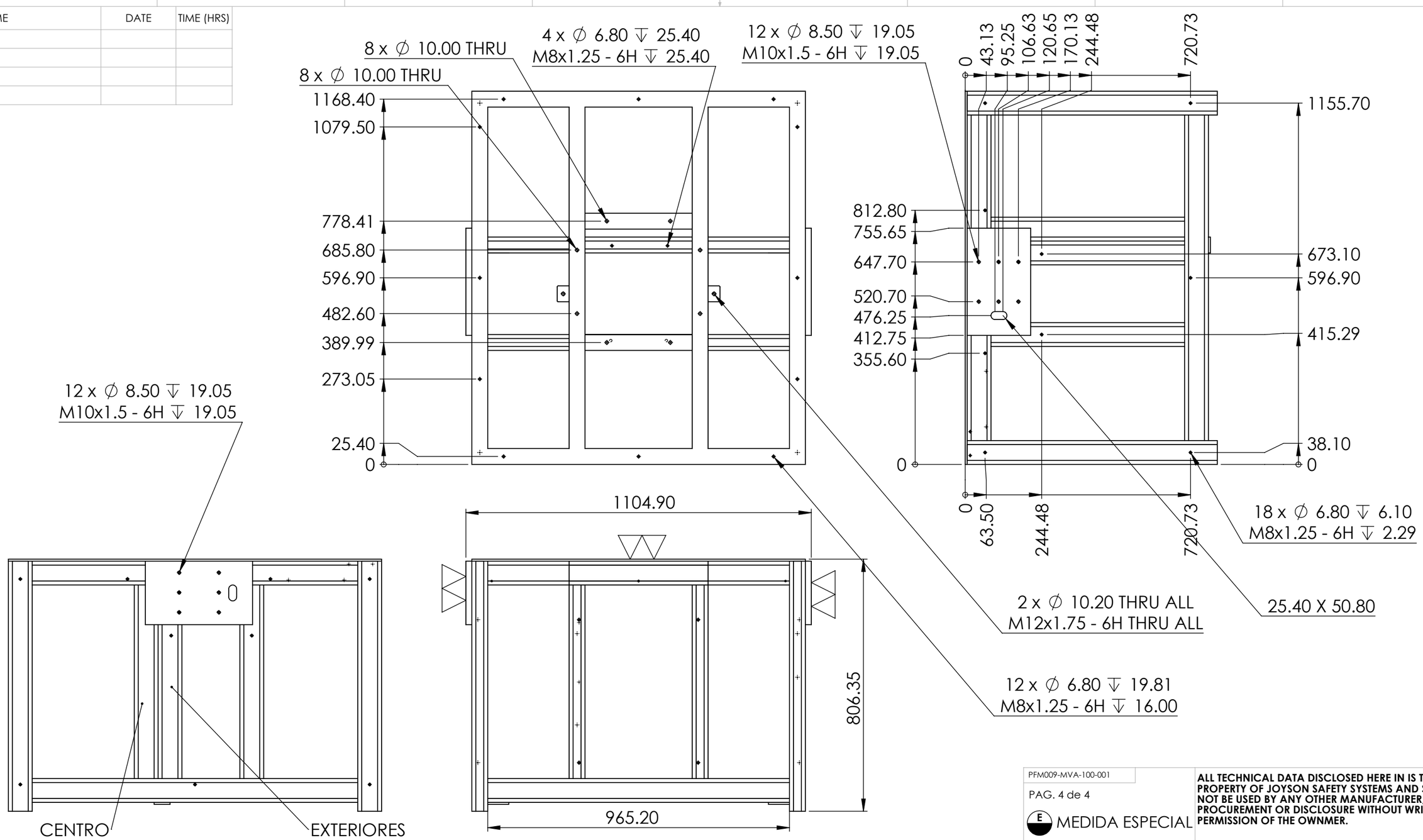

PFM009-MVA-100-001

PAG. 4 de 4

E MEDIDA ESPECIAL

ALL TECHNICAL DATA DISCLOSED HERE IN IS THE PROPERTY OF JOYSON SAFETY SYSTEMS AND SHALL NOT BE USED BY ANY OTHER MANUFACTURER, PROCUREMENT OR DISCLOSURE WITHOUT WRITTEN PERMISSION OF THE OWNMER.

JOYSON
EQUIPO AUTOMOTRIZ AMERICANA S.A. DE C.V.
BOLSAS DE AIRE
NOMBRE: RM
FIRMA:

AUTHORIZE | TALLER | QUALITY

NOTES:
Pieza libre de filos y rebabas.

TOTAL OF PIECES	1 Pza.
ANG. PROF	

REV	DESCRIPTION	DATE	APPROVED

REVIEWS

UNLESS OTHERWISE SPECIFIED

TOLERANCES DIMENSIONS	ISO 2768-1 mK-E ASME Y14.5M-1994	
MM	INCHES	ANGLES
+.1 -.1	+.004 -.004	+1° -1°

MATERIAL: PTR 0.25"X2"X3"

SURFACE TREATMENT: color joyson

HARDNESS

JOYSON SAFETY SYSTEMS

APPROVALS		DATE
DESIGNER	ABG	1/31/2022
REVIEW	RVM	1/31/2022

JOYSON TECHNICAL CENTER

MODEL NAME	PFM009-MVA	SERIES No	M2022-003
MACHINE NAME	QCF- VOVLO DAB		
PART NUMBER	PFM009-MVA-100-001		
SIZE **B**	PART NAME PFM002-TRN-001.B		REV. **A**
ESCALE: 1:20		DRAWING IN MILLIMETERS	

JSSAM-JTC-MF-FM-0002-001