NAME	DATE	TIME (HRS)
PRIORIDAD 1		

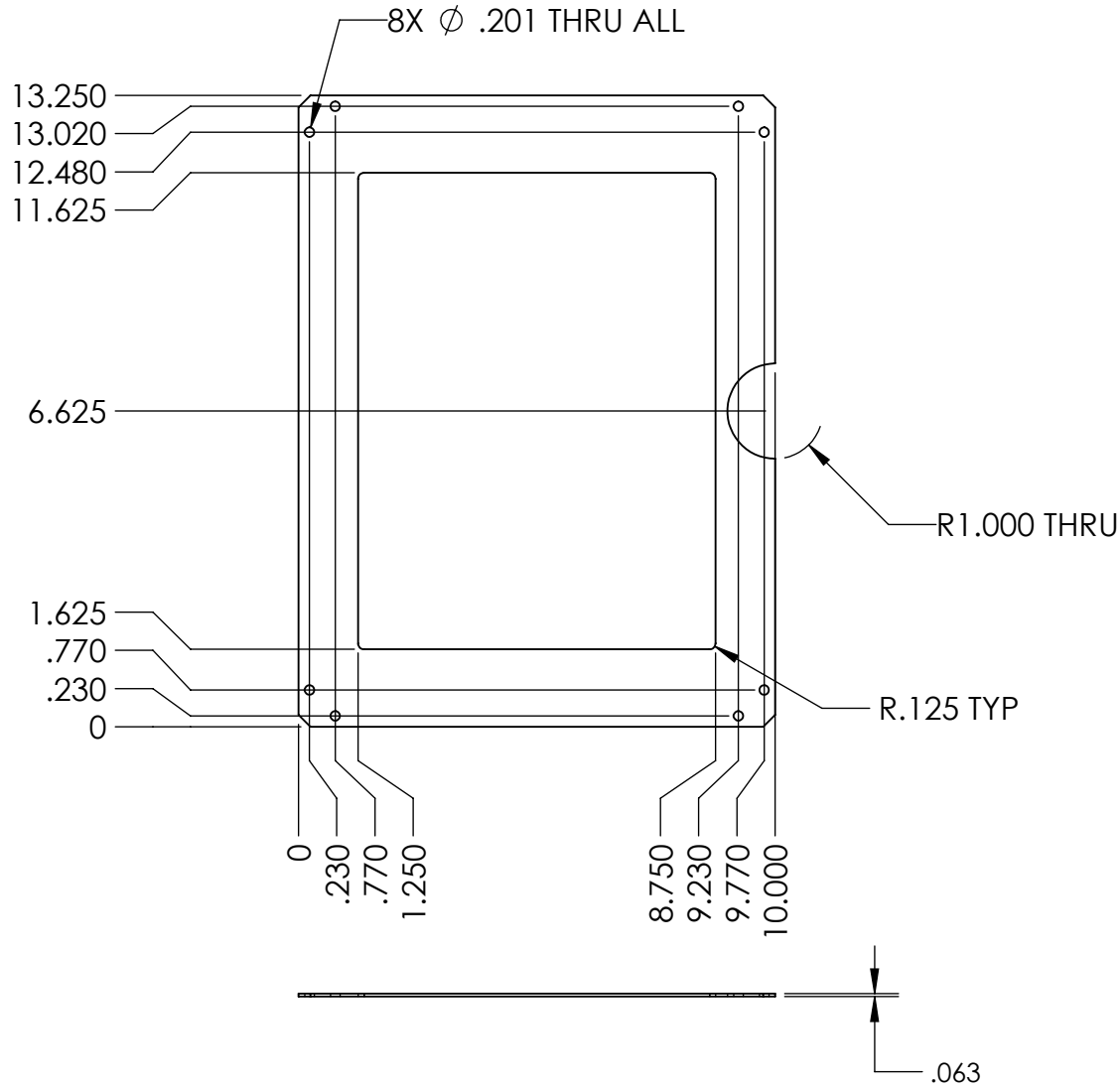

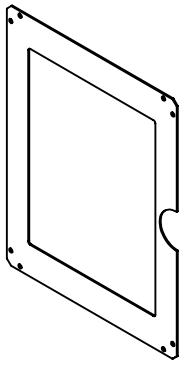

QUALITY

AUTHORIZE | TALLER

NOTES:
Pieza libre de filos y rebabas.

TOTAL OF PIECES	1 Pza.
ANG. PRO	

REV	DESCRIPTION	DATE	APPROVED

REVIEWS

UNLESS OTHERWISE SPECIFIED

TOLERANCES DIMENSIONS ISO 2768-1 mK-E ASME Y14.5M-1994

MM	INCHES	ANGLES
+.1 -.1	+.004 -.004	+1°-1°

MATERIAL: LAMINA INOXIDABLE

SURFACE TREATMENT: PULIDO

HARDNESS:

PAG. 1 de 1

MEDIDA ESPECIAL

ALL TECHNICAL DATA DISCLOSED HERE IN IS THE PROPERTY OF JOYSON SAFETY SYSTEMS AND SHALL NOT BE USED BY ANY OTHER MANUFACTURER, PROCUREMENT OR DISCLOSURE WITHOUT WRITTEN PERMISSION OF THE OWNMER.

JOYSON SAFETY SYSTEMS

APPROVALS		DATE
DESIGNER	RSMV	04/02/2022
REVIEW	JATA	04/02/2022

JOYSON TECHNICAL CENTER

MODEL NAME: N.A. SERIES No N.A.

MACHINE NAME: PRENSA SHIM NISSAN

PART NUMBER: PERFORADORA-P2-403

SIZE	PART NAME	REV.
A	PART 403	A

ESCALE 1:10 **DRAWING IN** INCHES

JSSAM-JTC-MF-FM-0002-001