NAME	DATE	TIME (HRS)

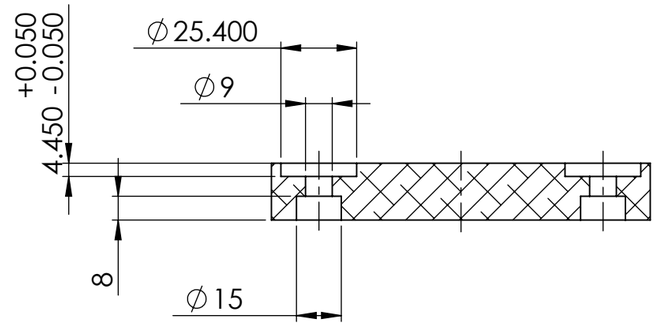

SECTION A-A

TAG	X LOC	Y LOC	SIZE
A1	-95.36	-20	∅ 6.600 THRU ⌴ ∅ 11 ↧ 6
A2	-95.36	20	
A3	-55.36	-20	
A4	-55.36	20	
A5	55.36	-20	
A6	55.36	20	
A7	95.36	-20	
A8	95.36	20	
B1	-47.63	-77.79	∅ 9 THRU ⌴ ∅ 15 ↧ 8
B2	-47.63	77.79	
B3	47.63	-77.79	
B4	47.63	77.79	
D1	-17.78	0	∅ 4.200 THRU M5x0.8 - 6H THRU
D2	17.78	0	
E1	92.08	-3.18	0 ∅ 5 0 THRU ALL M6x1.0 - 6H THRU ALL
E2	66.68	-3.18	

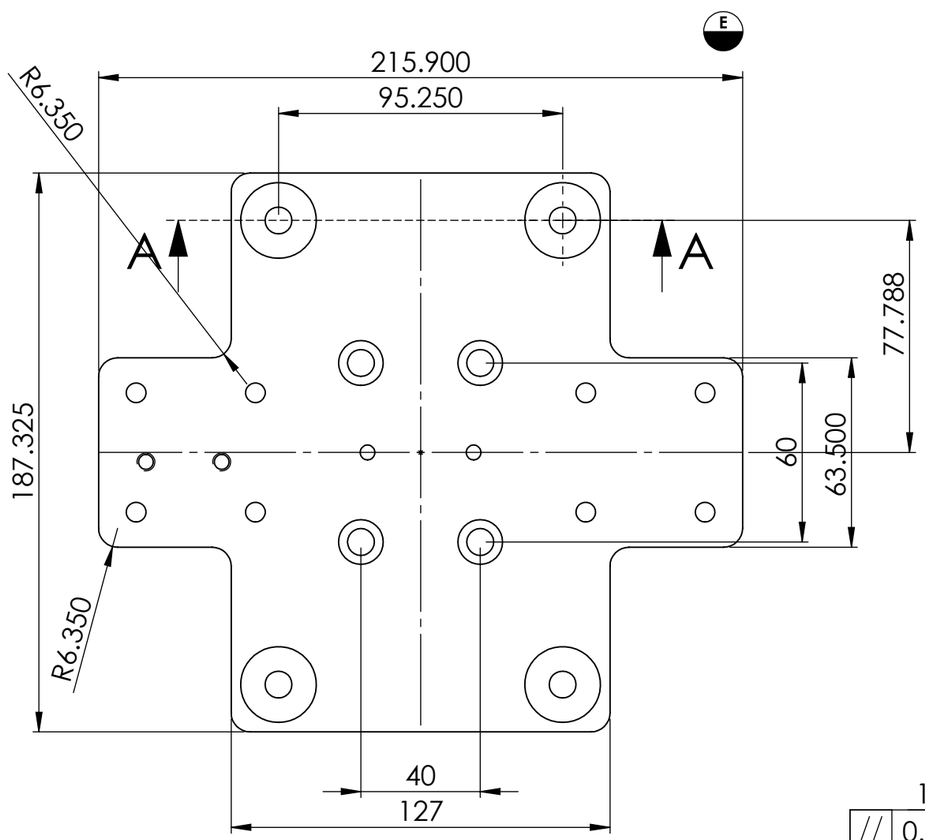

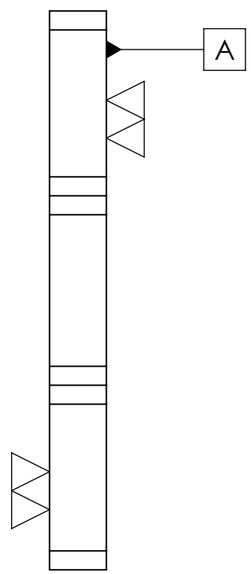

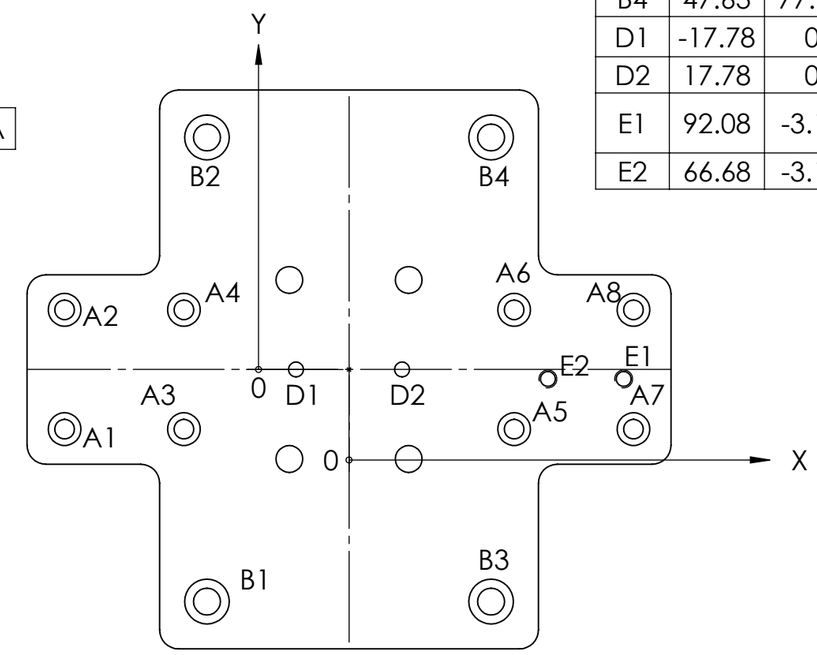

19.050

//	0.05	A
▱	0.05	E

TOQ008-MVA-500-006

PAG. 1 de 1

E MEDIDA ESPECIAL

ALL TECHNICAL DATA DISCLOSED HERE IN IS THE PROPERTY OF JOYSON SAFETY SYSTEMS AND SHALL NOT BE USED BY ANY OTHER MANUFACTURER, PROCUREMENT OR DISCLOSURE WITHOUT WRITTEN PERMISSION OF THE OWNMER.

JOYSON
EQUIPO AUTOMOTRIZ AMERICANA S.A. DE C.V.
BOLSAS DE AIRE
NOMBRE: RM
FIRMA:
AUTHORIZE

TALLER

QUALITY

NOTES:
Pieza libre de filos y rebabas.

TOTAL OF PIECES	1 Pza.
ANG. PROF	

REV	DESCRIPTION	DATE	APPROVED

REVIEWS

UNLESS OTHERWISE SPECIFIED

TOLERANCES DIMENSIONS	ISO 2768-1 mK-E ASME Y14.5M-1994	
MM	INCHES	ANGLES
+.1 -.1	+.004 -.004	+1° -1°

MATERIAL:	6061 Aluminium
SURFACE TREATMENT	ANODIZADO
HARDNESS	N.A.

JOYSON SAFETY SYSTEMS

APPROVALS		DATE
DESIGNER	ABG	1/30/2022
REVIEW	RVM	1/30/2022

JOYSON TECHNICAL CENTER

MODEL NAME	TOQ008-MVA	SERIES No	M2022-004
MACHINE NAME	QCF Tooling VOLVO		
PART NUMBER	TOQ008-MVA-500-006		
SIZE	PART NAME		REV.
B	TOQ008-MVA-500-006		
ESCALE: 1:2		DRAWING IN MILLIMETERS	

JSSAM-JTC-MF-FM-0002