NAME	DATE	TIME (HRS)

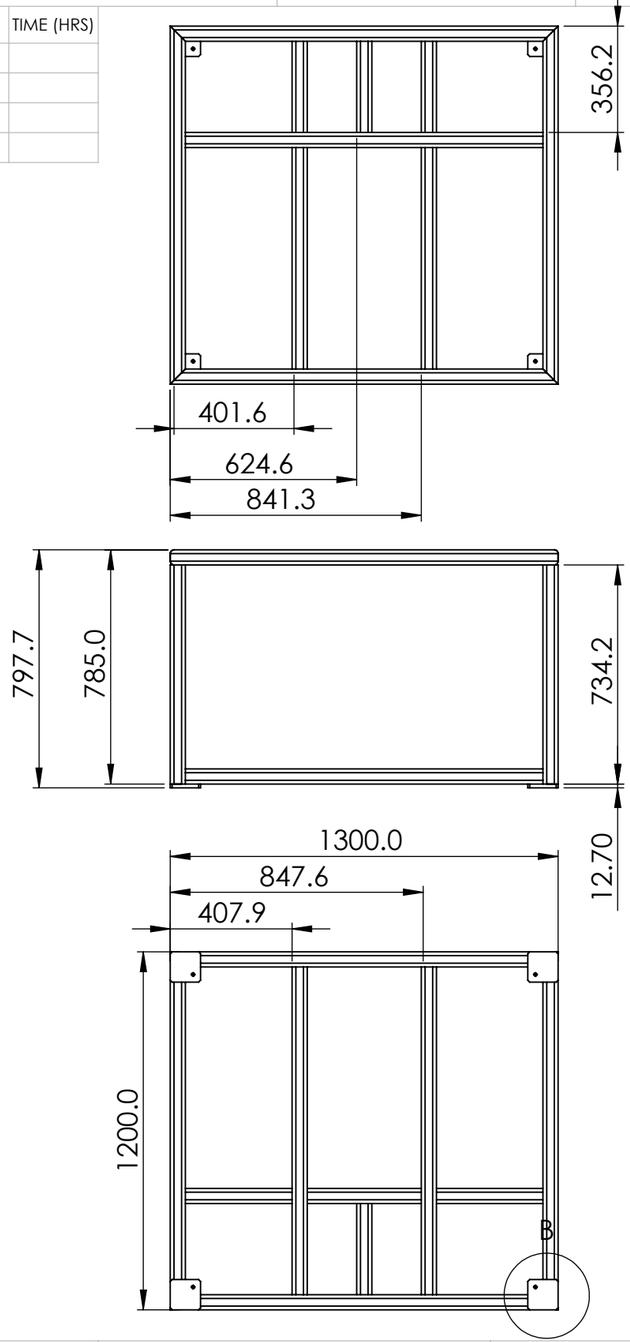

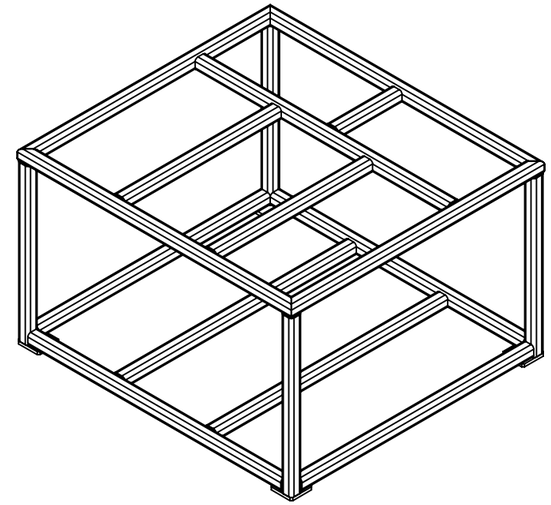

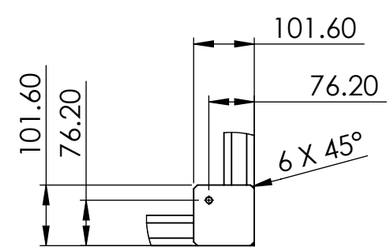

DETAIL B
SCALE 1 : 10

ITEM NO.	PART NUMBER	DESCRIPTION	QTY.	LENGTH
1	IC004-TRN -100-001	Main Frame	1	
		TUBE, SQUARE 50.80 X 50.80 X 6.35	2	1200
		TUBE, SQUARE 50.80 X 50.80 X 6.35	4	1098.4
		TUBE, SQUARE 50.80 X 50.80 X 6.35	4	734.2
		TUBE, SQUARE 50.80 X 50.80 X 6.35	2	742.2
		TUBE, SQUARE 50.80 X 50.80 X 6.35	1	305.4
		TUBE, SQUARE 50.80 X 50.80 X 6.35	2	1300
		TUBE, SQUARE 50.80 X 50.80 X 6.35	3	1198.4

IC004-TRN -100-001

PAG. 1 de 1

E MEDIDA ESPECIAL

ALL TECHNICAL DATA DISCLOSED HERE IN IS THE PROPERTY OF JOYSON SAFETY SYSTEMS AND SHALL NOT BE USED BY ANY OTHER MANUFACTURER, PROCUREMENT OR DISCLOSURE WITHOUT WRITTEN PERMISSION OF THE OWNMER.

AUTHORIZE	TALLER	QUALITY

NOTES:
Pieza libre de filos y rebabas.

REV	DESCRIPTION	DATE	APPROVED

REVIEWS

TOTAL OF PIECES: 1 Pza.
ANG. PROF

UNLESS OTHERWISE SPECIFIED

TOLERANCES DIMENSIONS	ISO 2768-1 mK-E ASME Y14.5M-1994	
MM	INCHES	ANGLES
+.1 -.1	+.004 -.004	+1° -1°

MATERIAL: PTR 2x2"
SURFACE TREATMENT: Color "Takata"
HARDNESS: N.A.

JOYSON SAFETY SYSTEMS

APPROVALS		DATE
DESIGNER	GFM	08/06/2022
REVIEW	GFM	08/06/2022

JOYSON TECHNICAL CENTER

MODEL NAME | SERIES No
MACHINE NAME
PART NUMBER: IC004-TRN -100-001

SIZE	PART NAME	REV.
B	Main Frame	A

ESCALE: 1:20 | DRAWING IN MILLIMETERS

TKH-MTC-MF-FM-0016-005