NAME	DATE	TIME (HRS)

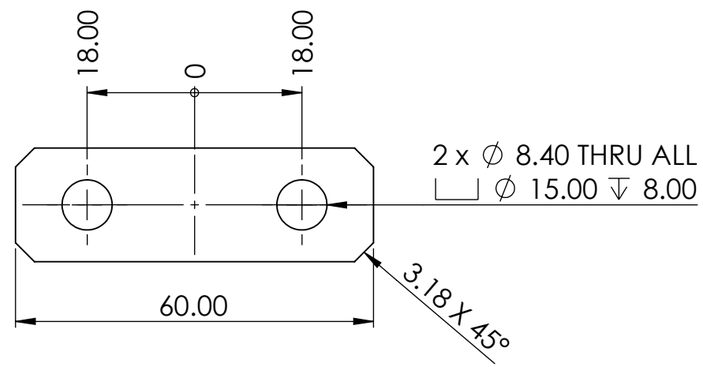

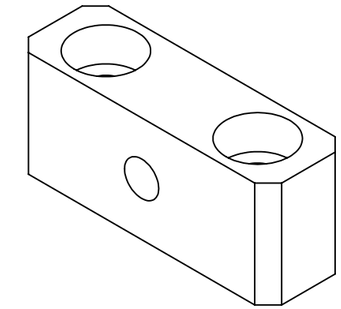

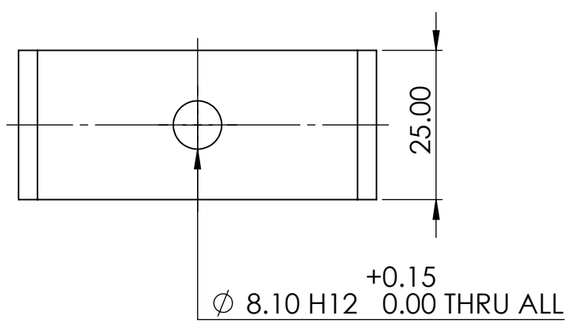

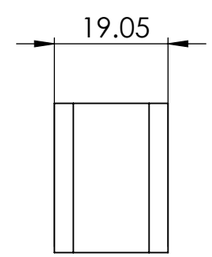

MDM001-TRN-1300-002

PAG. 1 de 1

MEDIDA ESPECIAL

ALL TECHNICAL DATA DISCLOSED HERE IS PROPERTY OF **TAKATA** SEAT BELTS INC. AND SHALL NOT BE USED BY ANY OTHER MANUFACTURER, PROCUREMENT OR DISCLOSURE WITHOUT WRITTEN PERMISSION OF THE OWNER

AUTHORIZE	TALLER	QUALITY

NOTES:

REV	DESCRIPTION	DATE	APPROVED
B	SE MODIFICO EL DISEÑO GENERAL DE LA PIEZA		

REVIEWS

TOTAL OF PIECES: 2 Pza.

ANG. PROF

UNLESS OTHERWISE SPECIFIED

TOLERANCES DIMENSIONS: ISO 2768-1 mK-E ASME Y14.5M-1994

MM	INCHES	ANGLES
+.1 -.1	+.004 -.004	+1° -1°

MATERIAL: 1018 Cold Rolled

SURFACE TREATMENT: Pavonado

HARDNESS: N.A.

TAKATA

APPROVALS		DATE
DESIGNER	LGG	24-Apr-19
REVIEW	JEC	24-Apr-19

TAKATA MONTERREY TECHNICAL CENTER

MODEL NAME	MDM001-TRN	SERIES No	M2019-067
MACHINE NAME	Dobladora Manual		
PART NUMBER	MDM001-TRN-1300-002		
SIZE B	PART NAME MDM001-TRN-1300-002		REV. B
ESCALE: 1:1		DRAWING IN MILLIMETERS	