NAME	DATE	TIME (HRS)

ITEM NO.	PART NUMBER	DESCRIPTION	QTY.
1	PFM009-MVA-201-001	3 X 1.5 X 40.0 Steel Tubing	1
2	PFM009-MVA-201-002	3 X 1.5 X 40.0 Steel Tubing	1
3	PFM009-MVA-201-003	3 X 1.5 X 50.0 Steel Tubing	1
4	PFM009-MVA-201-004	1.5 X 1.5 X 17.75 Steel Tubing	1
5	PFM009-MVA-201-005	1.5 X 1.5 X 16.75 Steel Tubing	1
6	PFM009-MVA-201-006	1.5 x 1.5 x 5.875 Steel Tubing	2
7	PFM009-MVA-201-007	1.5 x 1.5 x 17.5 Steel Tubing	1

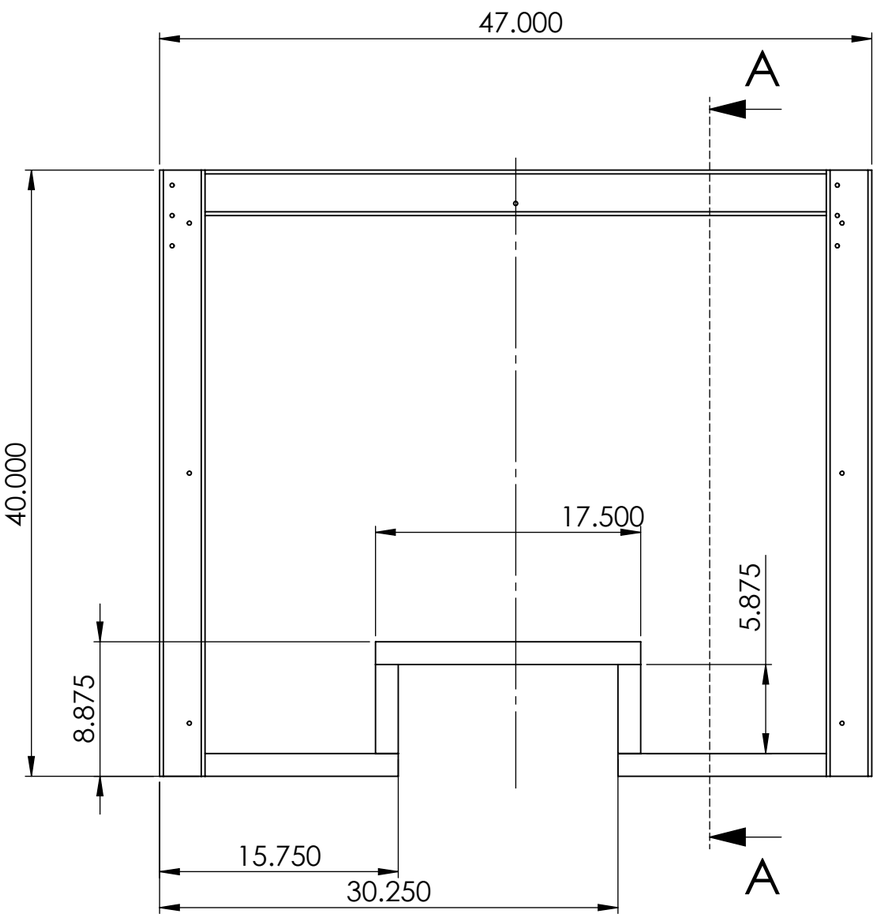

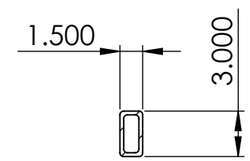

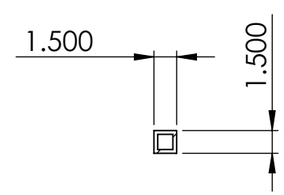

SECTION A-A

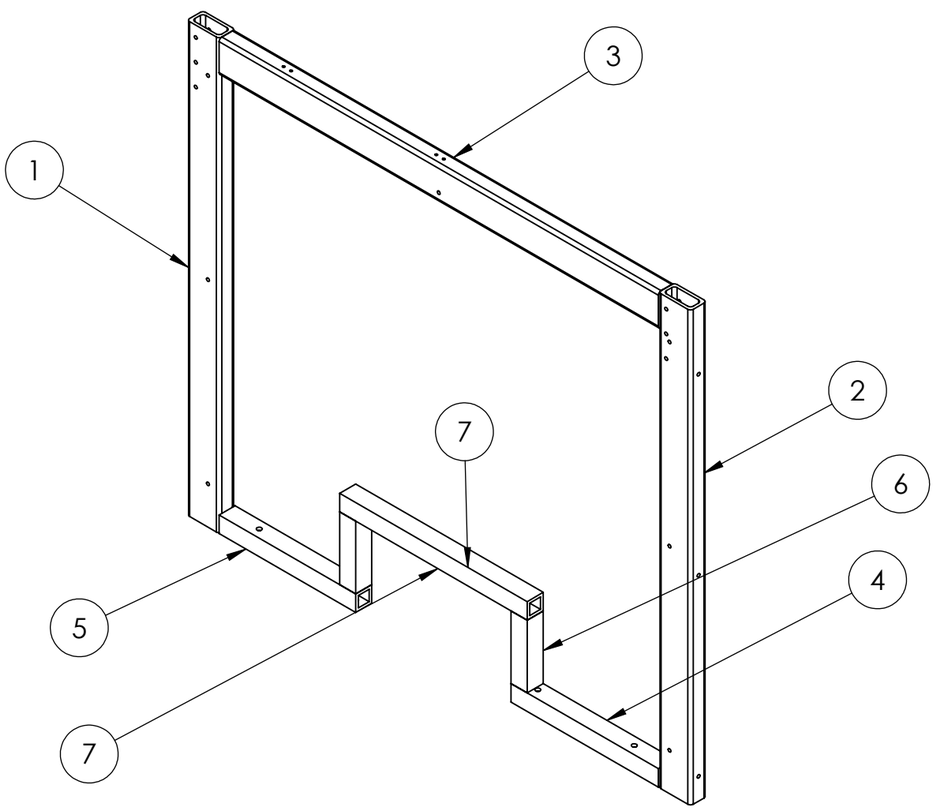

PFM009-MVA-201-000

PAG. 1 de 1

E MEDIDA ESPECIAL

ALL TECHNICAL DATA DISCLOSED HERE IN IS THE PROPERTY OF JOYSON SAFETY SYSTEMS AND SHALL NOT BE USED BY ANY OTHER MANUFACTURER, PROCUREMENT OR DISCLOSURE WITHOUT WRITTEN PERMISSION OF THE OWNMER.

JOYSON
EQUIPO AUTOMOTRIZ AMERICANA S.A. DE C.V.
BOLSAS DE AIRE
NOMBRE: RM
FIRMA:
AUTHORIZE

TALLER

QUALITY

NOTES:
Pieza libre de filos y rebabas.

TOTAL OF PIECES 2 Pza.

ANG. PROF

REV	DESCRIPTION	DATE	APPROVED

REVIEWS

UNLESS OTHERWISE SPECIFIED

TOLERANCES DIMENSIONS	ISO 2768-1 mK-E ASME Y14.5M-1994	
MM	INCHES	ANGLES
+.1 -.1	+.004 -.004	+1° -1°

MATERIAL: PTR - Cal 12

SURFACE TREATMENT: COLOR JOYSON

HARDNESS: N.A.

JOYSON SAFETY SYSTEMS

APPROVALS		DATE
DESIGNER	ABG	1/31/2022
REVIEW	RVM	1/31/2022

JOYSON TECHNICAL CENTER

MODEL NAME PFM009-MVA SERIES No M2022-003

MACHINE NAME QCF- VOVLO DAB

PART NUMBER PFM009-MVA-201-000

SIZE **B** PART NAME Upper Guarding REV. A

ESCALE: 1:10 DRAWING IN MILLIMETERS

JSSAM-JTC-MF-FM-0002-001