NAME	DATE	TIME (HRS)

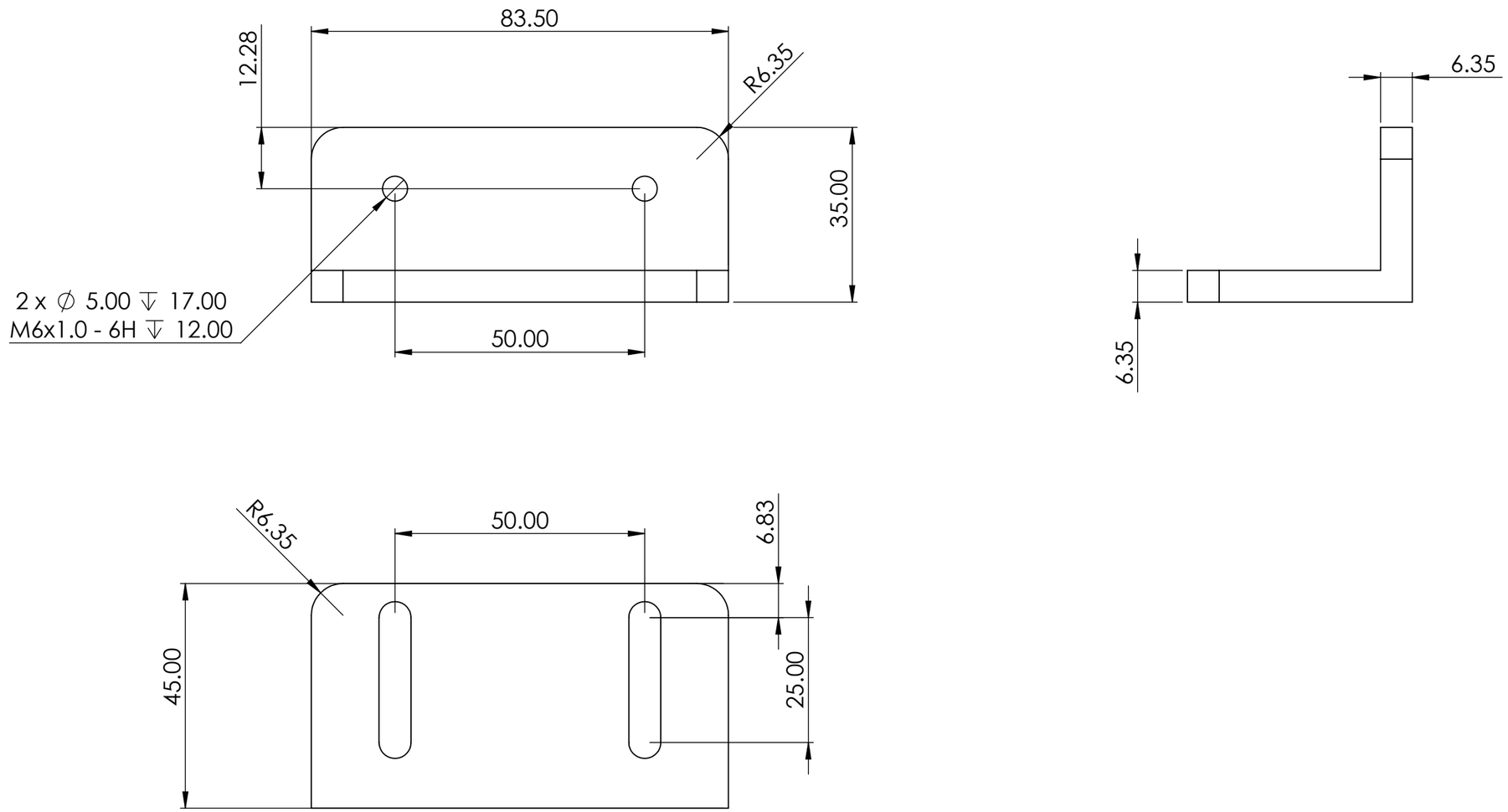

FM001-MVA-100-008

PAG. 1 de 1

E MEDIDA ESPECIAL

ALL TECHNICAL DATA DISCLOSED HERE IN IS THE PROPERTY OF JOYSON SAFETY SYSTEMS AND SHALL NOT BE USED BY ANY OTHER MANUFACTURER, PROCUREMENT OR DISCLOSURE WITHOUT WRITTEN PERMISSION OF THE OWNMER.

AUTHORIZE	TALLER	QUALITY

NOTES:

Pieza libre de filos y rebabas.

REV	DESCRIPTION	DATE	APPROVED

REVIEWS

TOTAL OF PIECES	2 Pza.
ANG. PROF	

UNLESS OTHERWISE SPECIFIED

TOLERANCES DIMENSIONS	ISO 2768-1 mK-E ASME Y14.5M-1994	
MM	INCHES	ANGLES
+.1 -.1	+.004 -.004	+1° -1°
MATERIAL:	6061 Aluminium	
SURFACE TREATMENT	Anodizado	
HARDNESS	N.A.	

JOYSON SAFETY SYSTEMS

APPROVALS		DATE
DESIGNER	ABG	3/6/2022
REVIEW	RVM	3/6/2022

JOYSON TECHNICAL CENTER

MODEL NAME	FM001-MVA	SERIES No	M2022-006
MACHINE NAME	Folding Machine Canoo CAB (HSAB) 2nd Row		
PART NUMBER	FM001-MVA-100-008		
SIZE	PART NAME		REV.
B	FM001-MVA-100-008		A
ESCALE: 2:2		DRAWING IN MILLIMETERS	

JSSAM-JTC-MF-FM-0002-001