NAME	DATE	TIME (HRS)

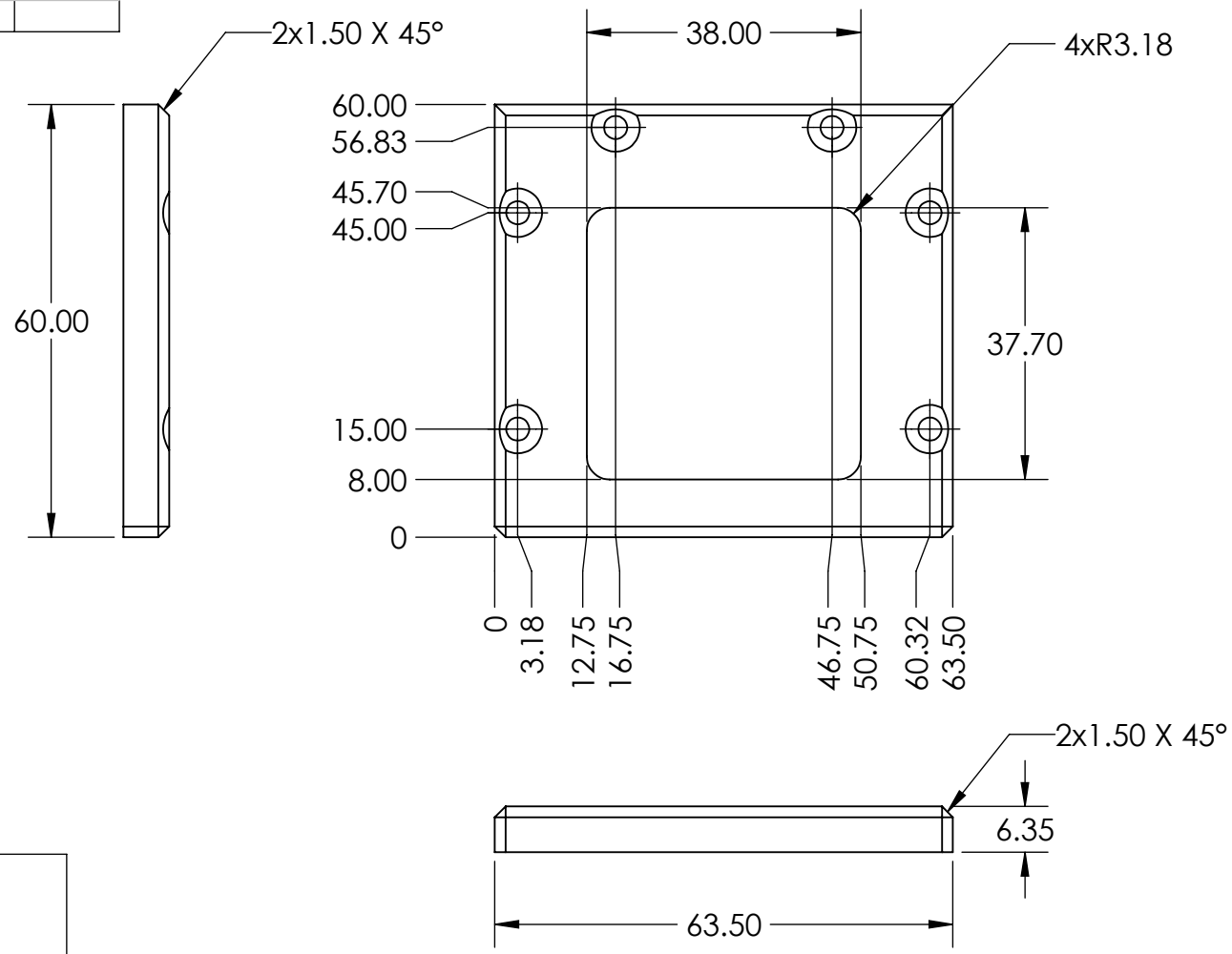

QUALITY

AUTHORIZE | TALLER

NOTES:
Pieza libre de filos y rebabas.

TOTAL OF PIECES	1 Pza.
ANG. PRO	

REV	DESCRIPTION	DATE	APPROVED

REVIEWS

UNLESS OTHERWISE SPECIFIED

TOLERANCES DIMENSIONS ISO 2768-1 mK-E ASME Y14.5M-1994

MM	INCHES	ANGLES
+.1 -.1	+.004 -.004	+1°-1°

MATERIAL: 6061 Aluminium

SURFACE TREATMENT: Clear Anodize

HARDNESS: N.A.

IWM002-TRN-102-005 | PAG. 1 de 1

E MEDIDA ESPECIAL

ALL TECHNICAL DATA DISCLOSED HERE IN IS THE PROPERTY OF JOYSON SAFETY SYSTEMS AND SHALL NOT BE USED BY ANY OTHER MANUFACTURER, PROCUREMENT OR DISCLOSURE WITHOUT WRITTEN PERMISSION OF THE OWNMER.

JOYSON SAFETY SYSTEMS

APPROVALS		DATE
DESIGNER	JLOV	4/27/2022
REVIEW	RVM	4/27/2022

JOYSON TECHNICAL CENTER

MODEL NAME: IWM002-TRN | SERIES No M2022-010

MACHINE NAME: INFLATOR WEIGHT #1

PART NUMBER: IWM002-TRN-102-005

SIZE	PART NAME	REV.
A	IWM002-TRN-102-005	A

ESCALE 1:1 | **DRAWING IN** MILLIMETERS

JSSAM-JTC-MF-FM-0002-001