NAME	DATE	TIME (HRS)

ITEM NO.	PART NUMBER	DESCRIPTION	QTY.
1	FM002-MVA-601-003		1
2	FM002-MVA-601-002		2
3	FM002-MVA-601-001		1
4	FM002-MVA-601-005		1
5	FM002-MVA-601-006		2
6	FM002-MVA-602-009		1
7	WIM-125B	Winch	1

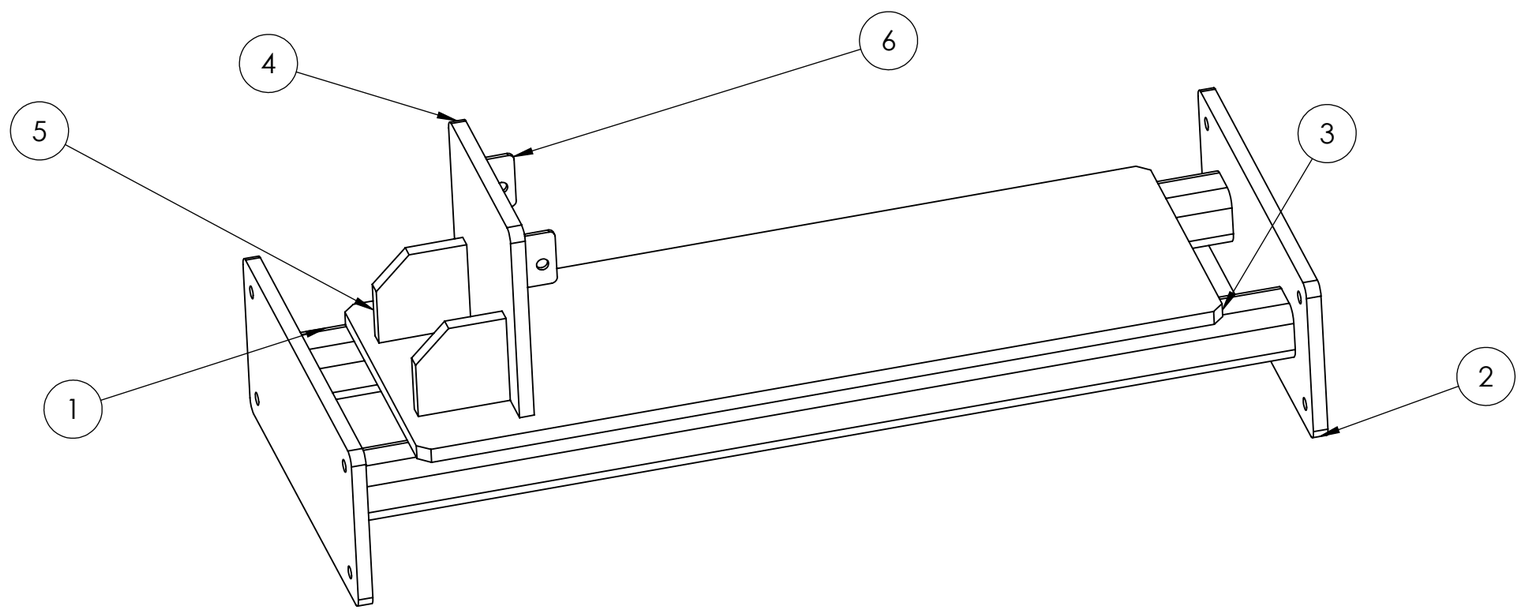

FM002-MVA-601-000

PAG. 1 de 3

E MEDIDA ESPECIAL

ALL TECHNICAL DATA DISCLOSED HERE IN IS THE PROPERTY OF JOYSON SAFETY SYSTEMS AND SHALL NOT BE USED BY ANY OTHER MANUFACTURER, PROCUREMENT OR DISCLOSURE WITHOUT WRITTEN PERMISSION OF THE OWNMER.

NOTES:

Pieza libre de filos y rebabas.

TOTAL OF PIECES	Pza.
ANG. PROF	

REV	DESCRIPTION	DATE	APPROVED

REVIEWS

UNLESS OTHERWISE SPECIFIED

TOLERANCES DIMENSIONS	ISO 2768-1 mK-E ASME Y14.5M-1994	
MM	INCHES	ANGLES
+.1 -.1	+.004 -.004	+1° -1°

MATERIAL:

SURFACE TREATMENT

HARDNESS

JOYSON SAFETY SYSTEMS

APPROVALS	DATE
DESIGNER	7/3/2022
REVIEW JEC	7/3/2022

JOYSON TECHNICAL CENTER

MODEL NAME	SERIES No
MACHINE NAME	
PART NUMBER	FM002-MVA-601-000

SIZE	PART NAME	REV.
B		

ESCALE: 1:5 | DRAWING IN MILLIMETERS

AUTHORIZE | TALLER | QUALITY

JSSAM-JTC-MF-FM-0002-001

NAME	DATE	TIME (HRS)

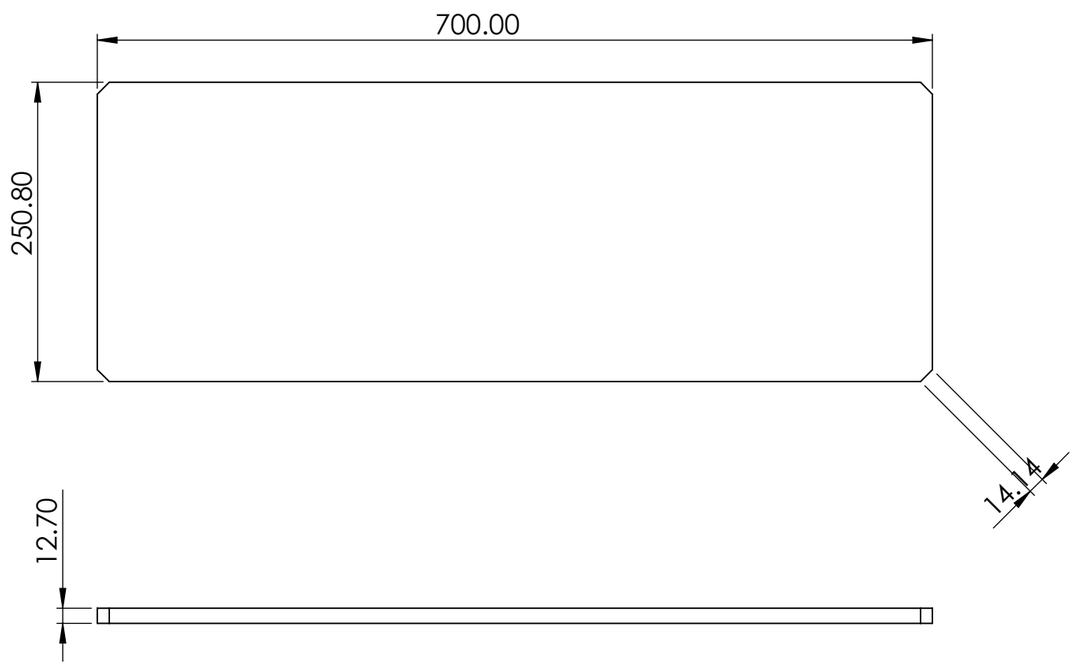

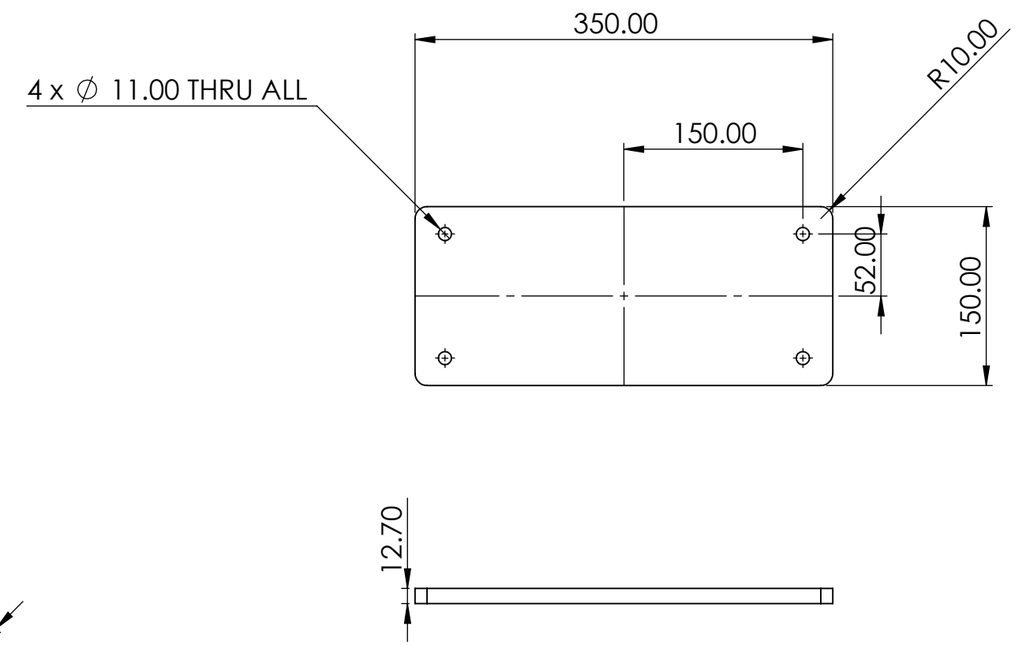

FM002-MVA-601-000

PAG. 2 de 3

E MEDIDA ESPECIAL

ALL TECHNICAL DATA DISCLOSED HERE IN IS THE PROPERTY OF JOYSON SAFETY SYSTEMS AND SHALL NOT BE USED BY ANY OTHER MANUFACTURER, PROCUREMENT OR DISCLOSURE WITHOUT WRITTEN PERMISSION OF THE OWNMER.

NOTES:

Pieza libre de filos y rebabas.

TOTAL OF PIECES	Pza.
ANG. PROF	

REV	DESCRIPTION	DATE	APPROVED

REVIEWS

UNLESS OTHERWISE SPECIFIED

TOLERANCES DIMENSIONS	ISO 2768-1 mK-E ASME Y14.5M-1994	
MM	INCHES	ANGLES
+.1 -.1	+.004 -.004	+1° -1°

MATERIAL:

SURFACE TREATMENT

HARDNESS

JOYSON SAFETY SYSTEMS

APPROVALS	DATE
DESIGNER	7/3/2022
REVIEW JEC	7/3/2022

JOYSON TECHNICAL CENTER

MODEL NAME	SERIES No
MACHINE NAME	
PART NUMBER	FM002-MVA-601-000
SIZE **B**	PART NAME / REV.
ESCALE: 1:5	DRAWING IN MILLIMETERS

AUTHORIZE	TALLER	QUALITY

JSSAM-JTC-MF-FM-0002-001

NAME	DATE	TIME (HRS)

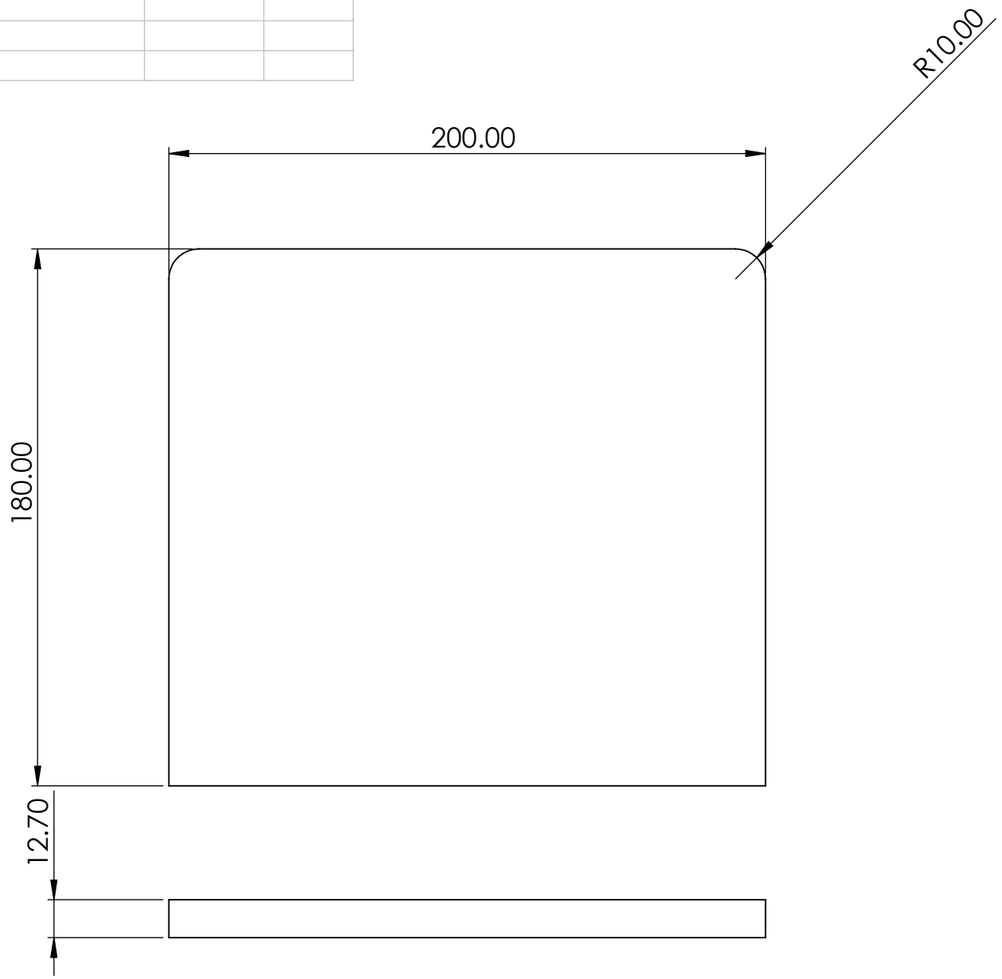

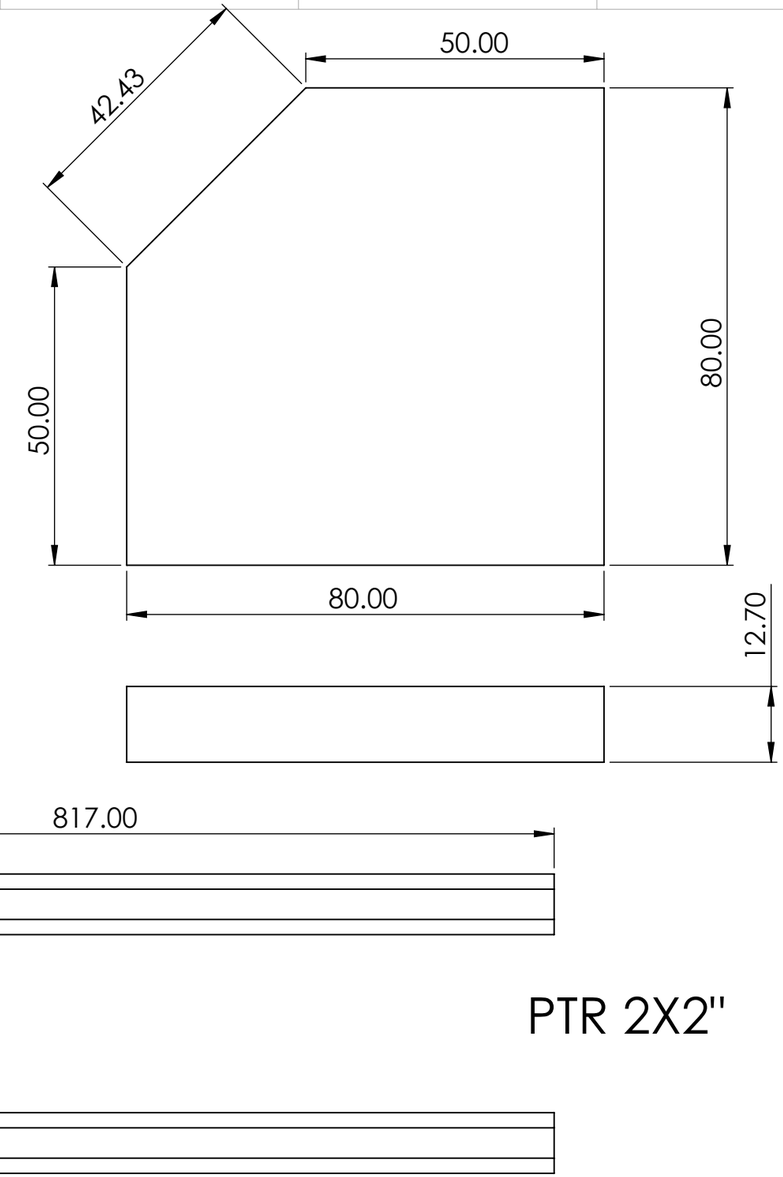

PTR 2X2"

FM002-MVA-601-000

PAG. 3 de 3

E MEDIDA ESPECIAL

ALL TECHNICAL DATA DISCLOSED HERE IN IS THE PROPERTY OF JOYSON SAFETY SYSTEMS AND SHALL NOT BE USED BY ANY OTHER MANUFACTURER, PROCUREMENT OR DISCLOSURE WITHOUT WRITTEN PERMISSION OF THE OWNMER.

AUTHORIZE	TALLER	QUALITY

NOTES:
Pieza libre de filos y rebabas.

REV	DESCRIPTION	DATE	APPROVED

REVIEWS

TOTAL OF PIECES: Pza.

ANG. PROF

UNLESS OTHERWISE SPECIFIED

TOLERANCES DIMENSIONS	ISO 2768-1 mK-E ASME Y14.5M-1994	
MM	INCHES	ANGLES
+.1 -.1	+.004 -.004	+1° -1°

MATERIAL:

SURFACE TREATMENT

HARDNESS

JOYSON SAFETY SYSTEMS

APPROVALS	DATE
DESIGNER	7/3/2022
REVIEW JEC	7/3/2022

JOYSON TECHNICAL CENTER

MODEL NAME | SERIES No

MACHINE NAME

PART NUMBER FM002-MVA-601-000

SIZE **B** | PART NAME | REV.

ESCALE: 1:2 | DRAWING IN MILLIMETERS

JSSAM-JTC-MF-FM-0002-001