NAME	DATE	TIME (HRS)

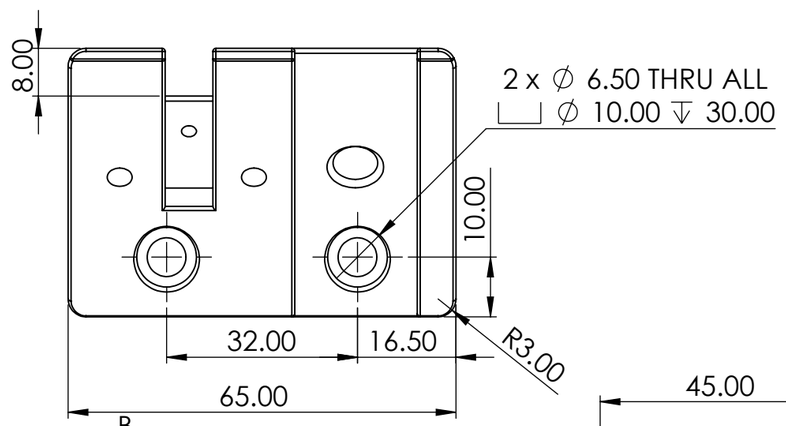

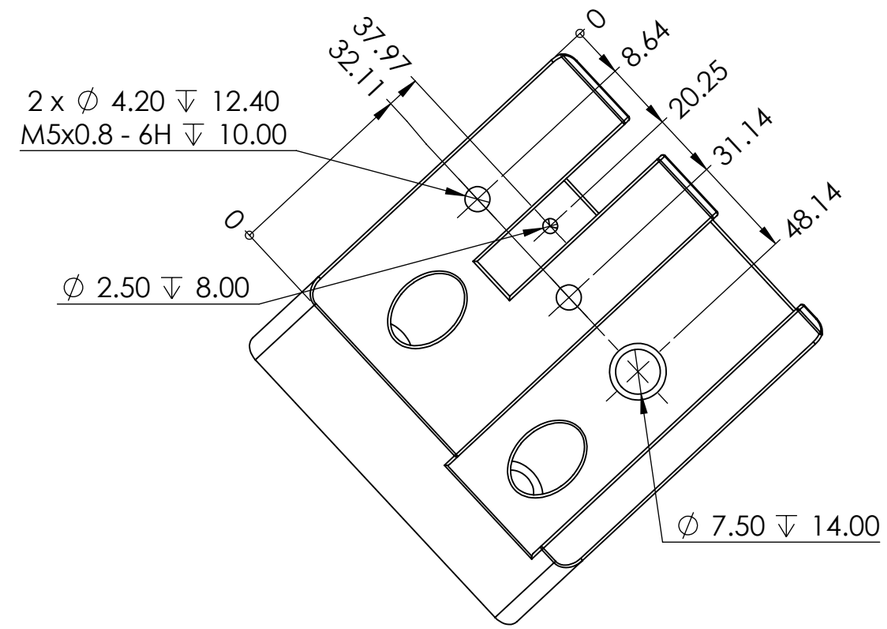

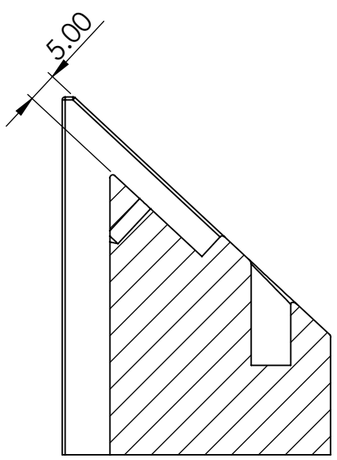

SECTION B-B

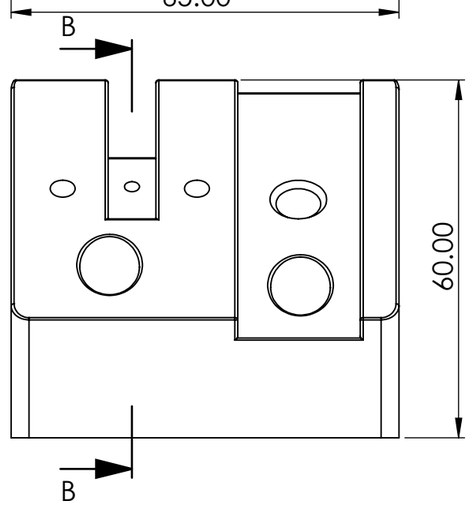

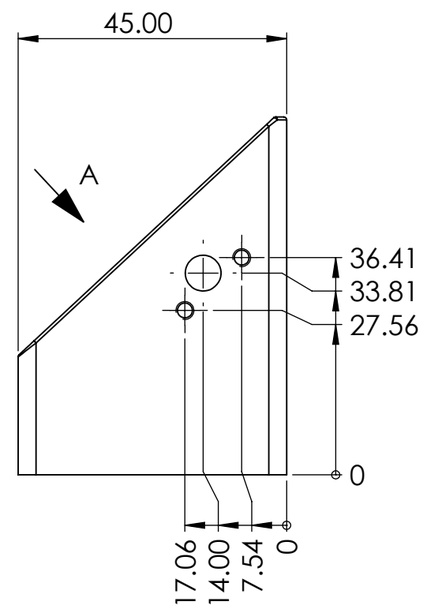

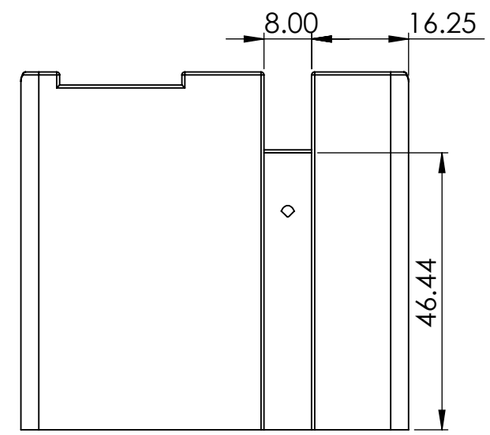

VIEW A

WGB001-AC-301-005

PAG. 1 de 1

MEDIDA ESPECIAL

ALL TECHNICAL DATA DISCLOSED HERE IN IS THE PROPERTY OF JOYSON SAFETY SYSTEMS AND SHALL NOT BE USED BY ANY OTHER MANUFACTURER, PROCUREMENT OR DISCLOSURE WITHOUT WRITTEN PERMISSION OF THE OWNMER.

AUTHORIZE	TALLER	QUALITY

NOTES:
Pieza libre de filos y rebabas.

TOTAL OF PIECES	1 Pza.
ANG. PROF	

REV	DESCRIPTION	DATE	APPROVED

REVIEWS

UNLESS OTHERWISE SPECIFIED

TOLERANCES DIMENSIONS	ISO 2768-1 mK-E ASME Y14.5M-1994	
MM	INCHES	ANGLES
+.1 -.1	+.004 -.004	+1° -1°

MATERIAL:	D2 Steel
SURFACE TREATMENT	Pavonado
HARDNESS	HRC 50-55

JOYSON SAFETY SYSTEMS

APPROVALS		DATE
DESIGNER	ABG	7/8/2021
REVIEW	RVM	7/8/2021

JOYSON TECHNICAL CENTER

MODEL NAME	SERIES No
MACHINE NAME	
PART NUMBER	WGB001-AC-301-005

SIZE	PART NAME	REV.
B		**A**

ESCALE: 1:1 | DRAWING IN MILLIMETERS