NAME	DATE	TIME (HRS)

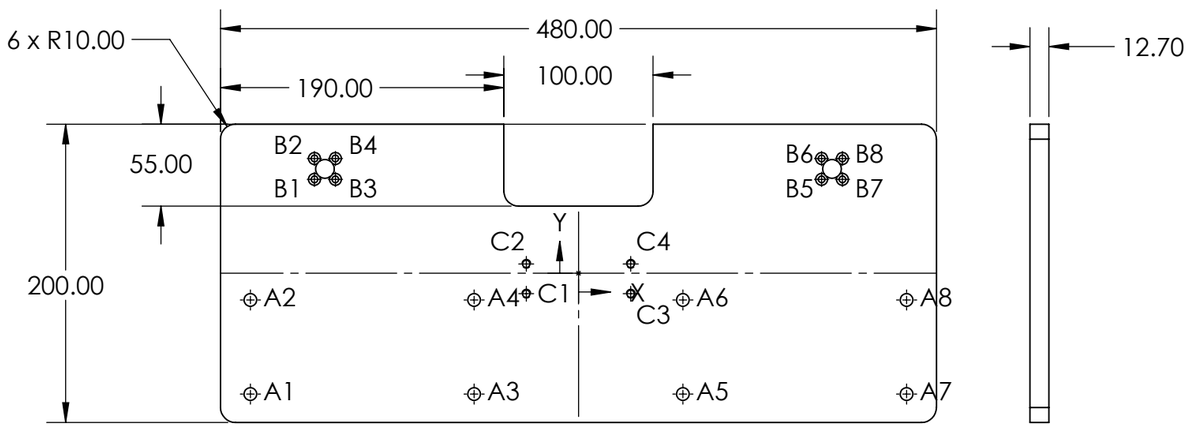

TAG	X LOC	Y LOC	SIZE
A1	-220	-80.95	∅8.50 THRU
A2	-220	-17.85	
A3	-70	-80.95	
A4	-70	-17.85	
A5	70	-80.95	
A6	70	-17.85	
A7	220	-80.95	
A8	220	-17.85	
B1	-177	63	∅ 4.50 THRU ALL ⌴ ∅ 8.00 ↧ 4.50
B2	-177	77	
B3	-163	63	
B4	-163	77	
B5	163	63	
B6	163	77	
B7	177	63	
B8	177	77	
C1	-35	-13.70	∅ 5.00 THRU ALL M6X1.0 - 6H THRU ALL
C2	-35	6.30	
C3	35	-13.70	
C4	35	6.30	

PFM010-MVA-201-001

PAG. 1 de 1

E MEDIDA ESPECIAL

ALL TECHNICAL DATA DISCLOSED HERE IN IS THE PROPERTY OF JOYSON SAFETY SYSTEMS AND SHALL NOT BE USED BY ANY OTHER MANUFACTURER, PROCUREMENT OR DISCLOSURE WITHOUT WRITTEN PERMISSION OF THE OWNMER.

NOTES:

Pieza libre de filos y rebabas.

TOTAL OF PIECES	1 Pza.
ANG. PROF	

REV	DESCRIPTION	DATE	APPROVED

REVIEWS

UNLESS OTHERWISE SPECIFIED

TOLERANCES DIMENSIONS	ISO 2768-1 mK-E ASME Y14.5M-1994	
MM	INCHES	ANGLES
+.1 -.1	+.004 -.004	+1° -1°

MATERIAL:	ALUMINIUM
SURFACE TREATMENT	ANODIZADO
HARDNESS	N/A

JOYSON SAFETY SYSTEMS

APPROVALS		DATE
DESIGNER	JLOV	3/23/2022
REVIEW	RVM	3/23/2022

JOYSON TECHNICAL CENTER

MODEL NAME	PRM010-MVA	SERIES No	M2022-009
MACHINE NAME	FOLDING MACHINE CANOO DAB		
PART NUMBER	PFM010-MVA-201-001		
SIZE **B**	PART NAME PFM010-MVA-201-001		REV. **A**
ESCALE: 1:4		DRAWING IN MILLIMETERS	

AUTHORIZE	TALLER	QUALITY

JSSAM-JTC-MF-FM-0002-001