REVISION HISTORY					
REV	DESCRIPTION	DATE	BY	CHK	APP
0					

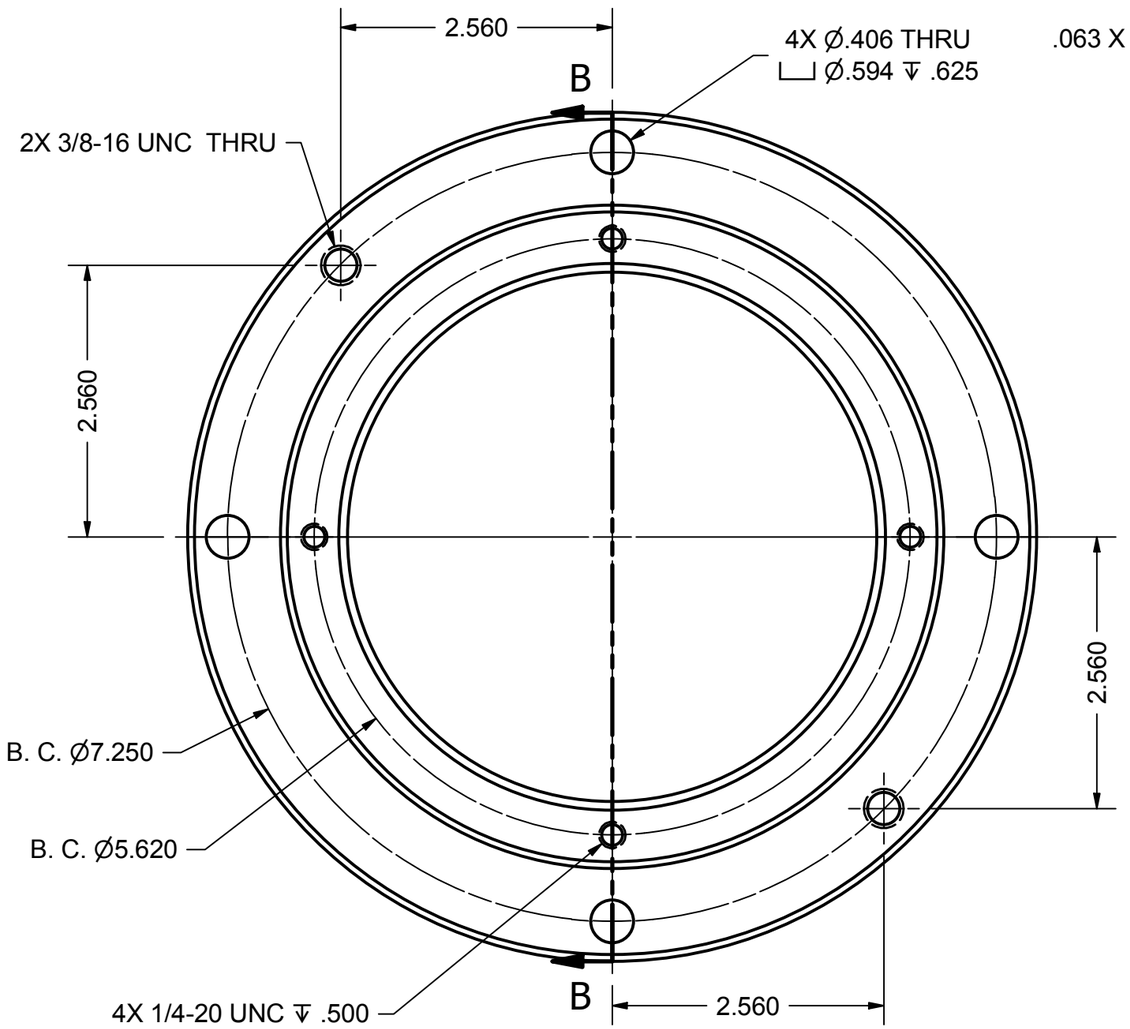

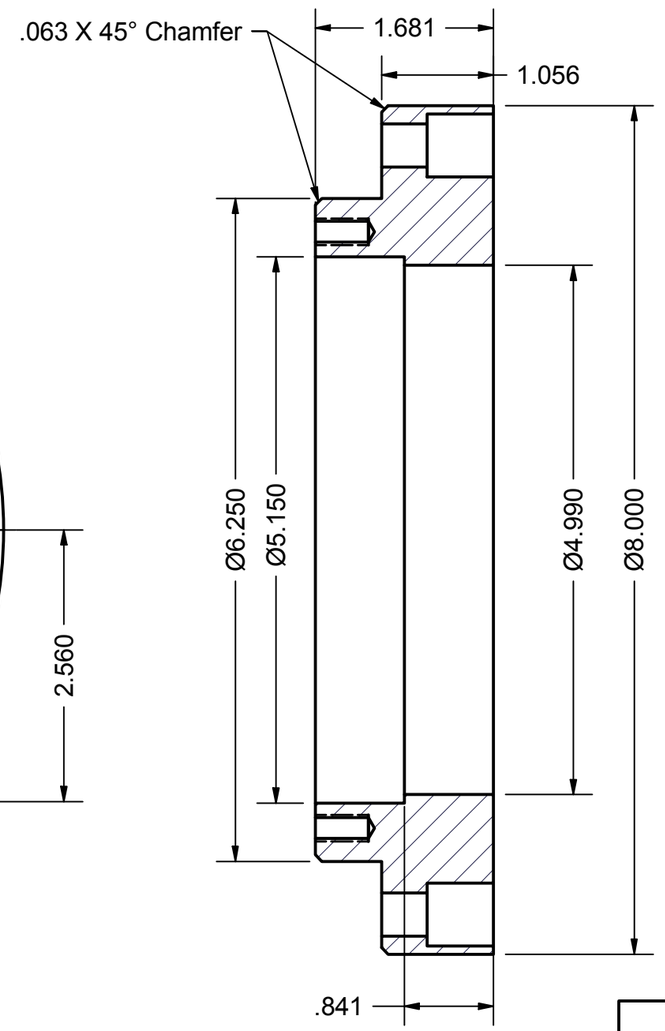

SECTION B – B

SCALE .7

REQ'D
UNLESS OTHERWISE SPECIFIED, TOLERANCES ARE AS FOLLOWS:
.X ± .030
.XX ± .015
.XXX ± .005
.XXXX ± .0005
FRACTIONS ± 1/16"
ANGLE ± 5°

© COPYRIGHT 2012

Ice Industries

NOTICE

ALL INFORMATION, DATA, AND CALCULATIONS CONTAINED IN THIS DRAWING IS THE EXCLUSIVE PROPERTY OF *Ice Industries, Inc.*, ITS SUBSIDIARIES AND AFFILIATES. THIS INFORMATION IS CONSIDERED PROPRIETARY. IT IS NOT TO BE REPRODUCED, MODIFIED, REENGINEERED OR DISCLOSED TO OTHERS. ANY PRODUCTS DEPICTED HEREIN, ARE NOT TO BE FABRICATED, IN WHOLE OR IN PART, WITHOUT THE PRIOR WRITTEN CONSENT OF *Ice Industries, Inc.*

DRAWN	O SEGOVIA	1/8/2016
CHECKED BY:		
ENG. APPROVAL:		
MFG. APPROVAL:		
MATERIAL: TYPE:	D2	
THK:		

ICE INDUSTRIES

TITLE: 4610-P6-05 022 474 Rev B

SIZE	HARDNESS	DWG NO	REV
B	60-62	4610-P6-05 022 474 Rev B.idw	0

FINISH:

SHEET 1 OF 1