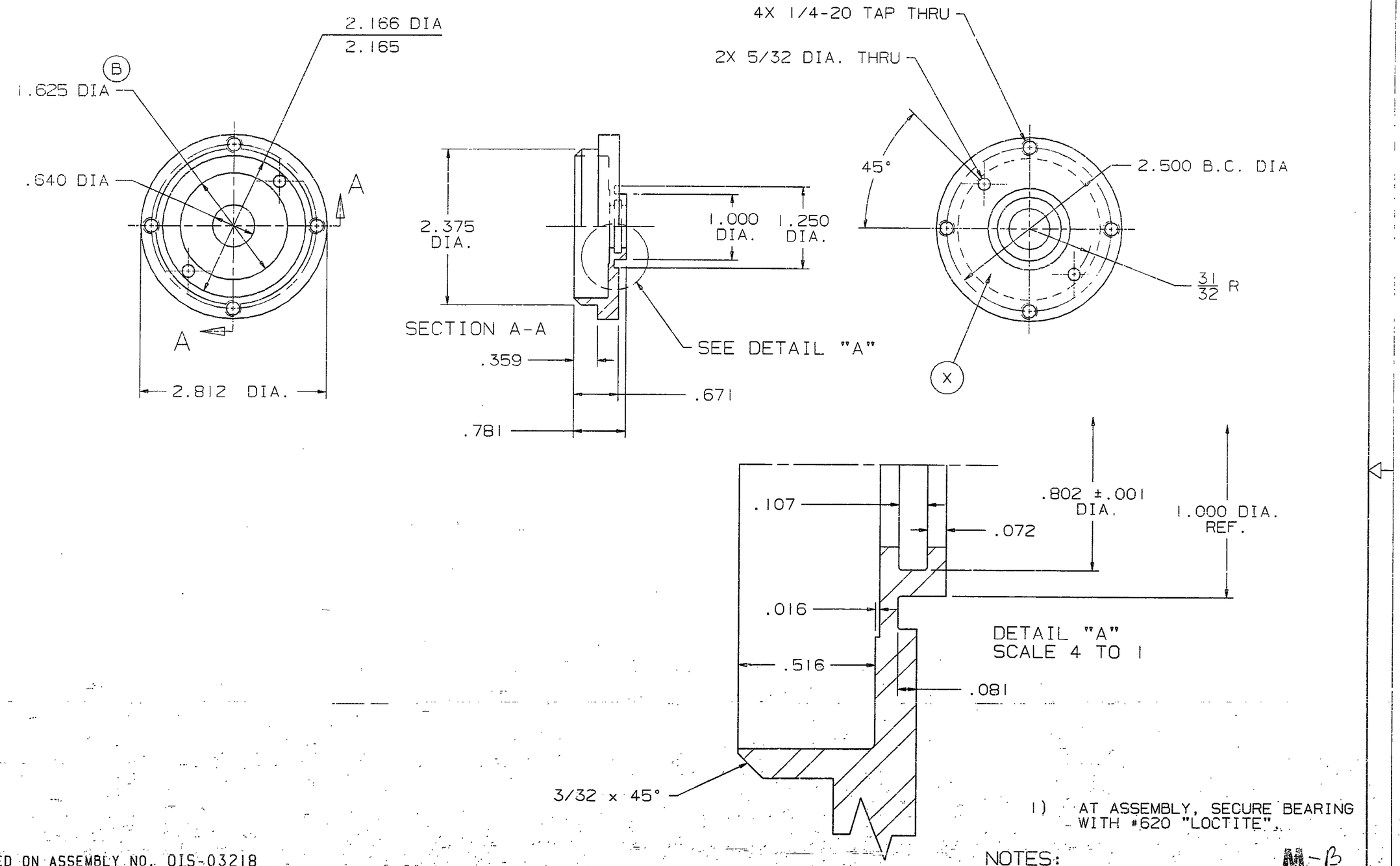

1) AT ASSEMBLY, SECURE BEARING WITH #620 "LOCTITE".

NOTES:

M-B

USED ON ASSEMBLY NO. OIS-03218

"INFORMATION CONTAINED HEREIN CONSTITUTES PROPRIETARY CONFIDENTIAL INFORMATION OF OWENS-ILLINOIS, AND IS ACCEPTED ONLY SUBJECT TO THAT UNDERSTANDING. IT IS TO BE KEPT CONFIDENTIAL AND NOT COPIED, USED, OR CONVEYED TO OTHERS WITHOUT OWENS-ILLINOIS' WRITTEN AUTHORIZATION."

B	11-17-97	
A	2-19-97	
CHANGES		

UNLESS SPECIFIED:
FINISHED SURFACE ROUGHNESS 125
FINISHED DIMENSIONS-FRACTIONAL ±.015
DECIMAL ±.005
BREAK SHARP EDGES
MARK PART NUMBER AT X

NAME UPPER LARGE BEARING HOUSING - T/O END
GODFREY LIGHTWEIGHT TAKEOUT

DRAWN	CHECKED	DATE	SCALE
RLS/97		11/27/96	FULL

MATERIAL AISI 4140 PREHEAT TREATED
HARDNESS Rc 30-34

OWENS-BROCKWAY
GLASS CONTAINERS, a unit of Owens-Illinois
DRAWING NUMBER
OIS-19-1307
SHEET

GSD 9557

OWENS-BROCKWAY
GLASS CONTAINERS, a unit of OWENS-ILLINOIS

TYPE	EFFECTIVITY
1 - PATTERN	5 - CORRECTION
2 - MATERIAL	6 - PARTS LIST
3 - DIMENSION	7 - COMBINATION
4 - FINISH	8 - OTHER

F - NEXT MANUFACTURED LOT
P - IN PROCESS - UP TO AFFECTED OPERATION + "F"
U - UNASSEMBLED PARTS - IN PROCESS, STORES, ASSEMBLY FLOOR + "P"
A - PARTS IN ASSEMBLIES + "U"
S - PARTS IN ASSEMBLIES IN MACHINES + "A"
SPECIAL INSTRUCTIONS: FOR HARD PARTS, "MACHINE NO.'S, ETC.
R - RECORD ONLY

FRAME NO.

CODE T 3 E U

DRAWING NUMBER OIS-19-1307

CHANGED BY RLS#97

CHANGE LETTER B

CHANGE DESCRIPTION & REASON:
1.625 DIA. WAS 1.312
REVISED TO IMPROVE BEARING SEATING.