M68 PLATE

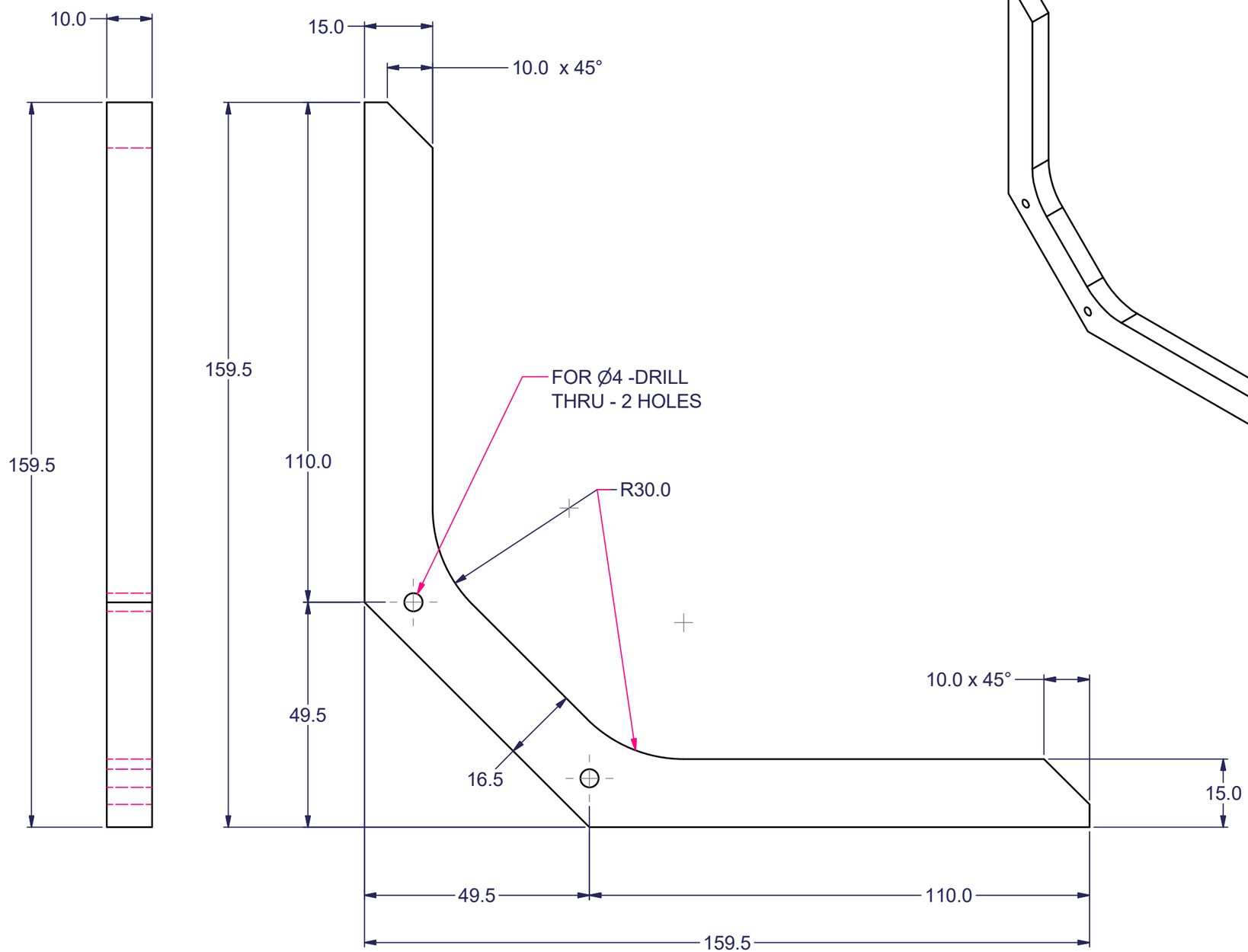

NOTA:
1.- STENCILAR ITEM

Stock List

ITEM	QTY	MATERIAL	DESCRIPTION
M68	1	NYLMID	3/8" x 160mm x 160mm

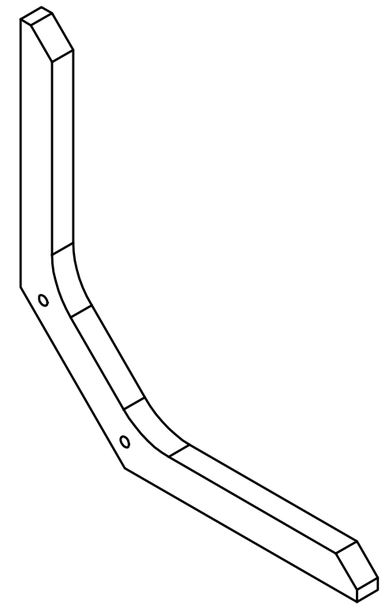

COSMA INNOVATIVE MANUFACTURING SOLUTIONS

REV	CHANGE	CHK'D	DATE

THIS DRAWING MAY USE BOTH INCH AND METRIC UNITS OF MEASUREMENT (*INDICATES INCH DIMENSIONS)

MAXIMUM ALLOWANCE ROUGHNESS OF ALL METRIC.

1 PLACE mm FINISH DIMENSIONS TO BE 3.2 MICRONS
2 PLACE mm FINISH DIMENSIONS TO BE 1.6 MICRONS
3 PLACE mm FINISH DIMENSIONS TO BE 0.5 MICRONS
ALL GROUND SURFACES TO BE 0.4 MICRONS.
METRIC - EXCEPT AS NOTED TOLERANCES SHALL BE:
1 PLACE MACHINING ˙0.3
1 PLACE FABRICATION ˙1.5
2 PLACE ˙0.08 BETWEEN MACHINED SURFACES
˙0.03 BETWEEN SINGLE DOWEL AND A HEEL SURFACE
˙0.03 BETWEEN DOWELS IN THE SAME PLANE
˙0.10 BETWEEN DOWELS IN DIFFERENT PLANES
˙0.13 TO SCREW HOLES, NON ACCUMULATIVE
ALL O SURFACES MUST BE FINISHED EXCEPT FOR COLD DRAWN SURFACES.

ALL EDGES OF PART CONTACT SURFACES ON LOCATING BLOCKS AND FINGERS TO HAVE .12R INCH / 3.00 mm AFTER SPOTTING.

MARK INDENTIFICATION AND MATERIAL NUMBERS ON DETAILS.
PAINT INDENTIFICATION NUMBERS ON STRUCTURAL WORK.

CRITICAL FEATURES ARE MARKED WITH "*"

UNIT No.: UNIT NUMBER
WEIGHT (KG): N/A

COTO: COTO NUMBER

- ☐ MOVIL PART RAL
- ☐ FIXED PART RAL
- ☐ BLACK OXIDE
- ■ WITH OUT PAINT
- ☐ POKA YOKE PAINT

THIS MATERIAL IS PROPERTY OF MAGNA COSMA INTERNATIONALNO RIGHTS ARE GRANTEDTO USE SUCH MATERIAL FOR ANY PURPOSE OTHER THAN FURNISHING OF SERVICES AND SUPPLIES

DESIGN SOURCE	BUILD SOURCE	CUSTOMER
MAGNA	MAGNA	CUSTOMER NAME

DESIGNER	DETAILER	3RD ANGLE PROYECTION
D. NAME	D. NAME	

PROJECT MGR.	DESIGN SUP.	CHECKER
PM NAME	F. NAME	CK NAME

SYSTEM NAME: PROJECT NAME

DESCRIPTION: PRODUCT NAME

SCALE	SHEET	RELEASE DATE
NONE	20 OF 22	3/1/2018

DRAWING No.
SHOWN: 114-FRW-JIP-ST65U-M68
OPPOSITE

E:\Users\jorggarcia.FMX\PROYECTOS SISTEM\PROYECTOS\MAGNA ESTAMPADOS\202114 FRIRE WALL\INVENTOR\DETALLADOS\FID-08-1 2D FORMAT.idw

Aplica:CIMS FID-08-1, VER.4
Resp: L. Luna Fecha: 09/09/2021