BILL OF MATERIAL			
IND	QTY.	MATERIAL	SIZE
1	1	AISI-C-1018 C.R.S.	1½x3¼x7½
2	1	AISI-C-1018 C.R.S.	¾x3x3½
3	1	STEEL PIPE (STD.)	2" I.D. 2⅜" O.D. x 3" LG.

F321597

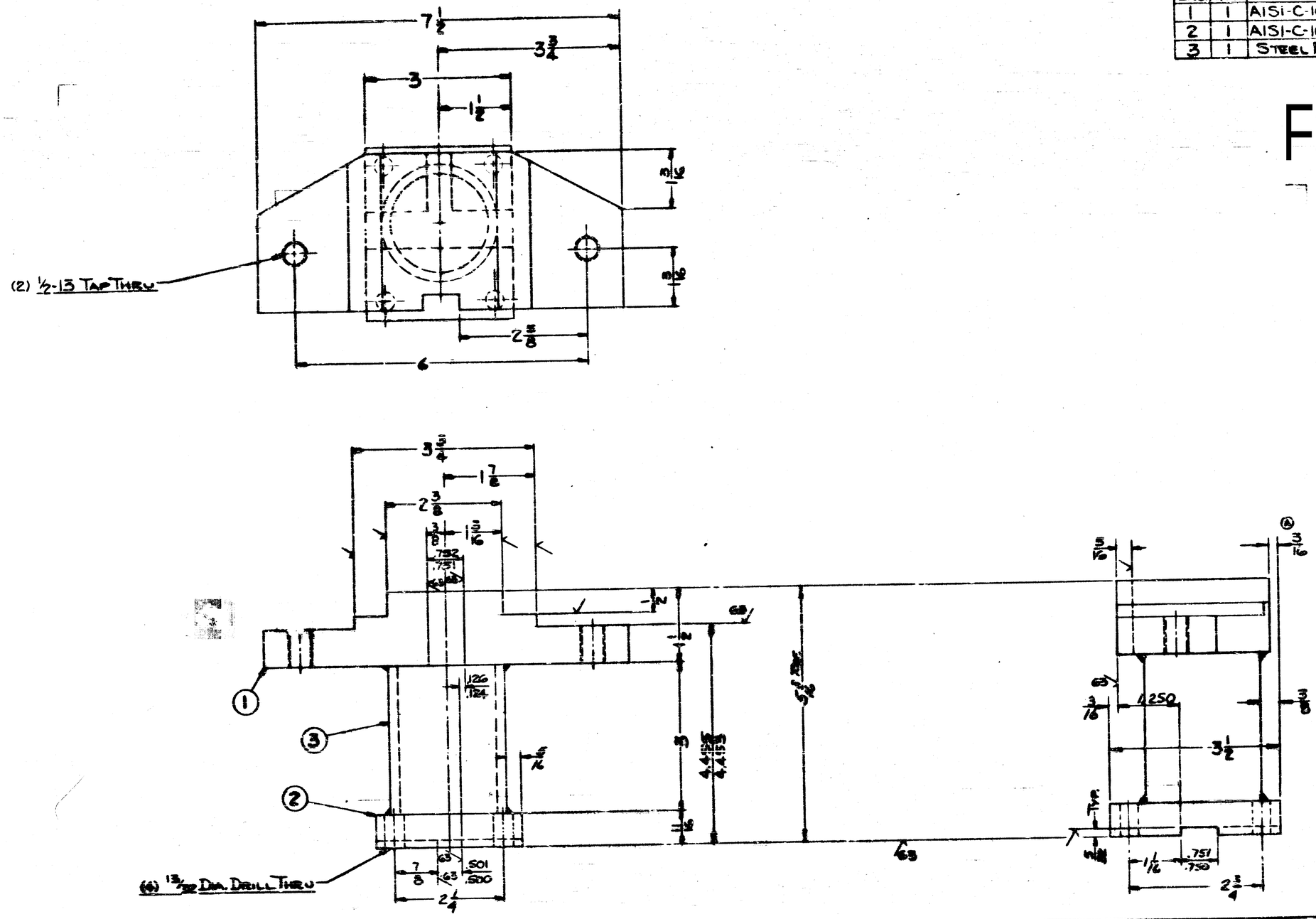

USED ON ASSEMBLY NO. HF-0254 (2)

		A	2-3-88	
		CHANGES		

"INFORMATION CONTAINED HEREIN CONSTITUTES PROPRIETARY CONFIDENTIAL INFORMATION OF OWENS-ILLINOIS, AND IS TO BE ACCEPTED ONLY SUBJECT TO THAT UNDERSTANDING. IT IS TO BE KEPT CONFIDENTIAL AND NOT COPIED, USED, OR CONVEYED TO OTHERS WITHOUT OWENS-ILLINOIS' WRITTEN AUTHORIZATION."

UNLESS SPECIFIED:
FINISHED SURFACE ROUGHNESS 125
FINISHED DIMENSIONS – FRACTIONAL ± .015
DECIMAL ± .005
BREAK SHARP EDGES
MAP PART NUMBER AT

NAME: BRACKET-BLADE HOLDER (REAR)

DRAWN	CHECKED	DATE	SCALE
EHM		2-24-84	FULL

MATERIAL: WELDMENT

OWENS-ILLINOIS DRAWING NUMBER HF-3797

SHEET ___

DRAWING NUMBER	CHANGE LETTER	CHANGED BY
HF-3797	A	RLB

CHANGE DESCRIPTION & REASON: ADDED 3/16 DIM. & REVISED 3/8 DIM. LINE OFF OF BASE;

FOR PROPER FABRICATION / ORDERS REQUEST FORM OC-101-R3

O.C.I. ENGINEERING & RESEARCH DEPT.

TYPE
1- PATTERN
2- MATERIAL
3- DIMENSION
4- FINISH
5- CORRECTION
6- PARTS LIST
7- COMBINATION
8- OTHER

EFFECTIVITY
F- NEXT MANUFACTURED LOT
P- IN PROCESS - UP TO AFFECTED OPERATION + "P"
U- UNASSEMBLED PARTS - IN PROCESS, STORES, ASSEMBLY FLOOR + "P"
A- PARTS IN ASSEMBLIES + "U"
T- PARTS OR ASSEMBLIES IN MACHINES + "A"
S- SPECIAL INSTRUCTIONS - FOR HARD PARTS, MACHINE NO'S, ETC.
R- RECORD ONLY

FRAME NO. 354 | CODE T S | E F

Impresión generada por: Eduardo Alexander Valadez Arballo
AUTORIZADO
FECHA DE IMPRESIÓN: 17/05/2022
ADN - ADMINISTRACIÓN DE DIBUJOS NETWORK