NAME	DATE	TIME (HRS)

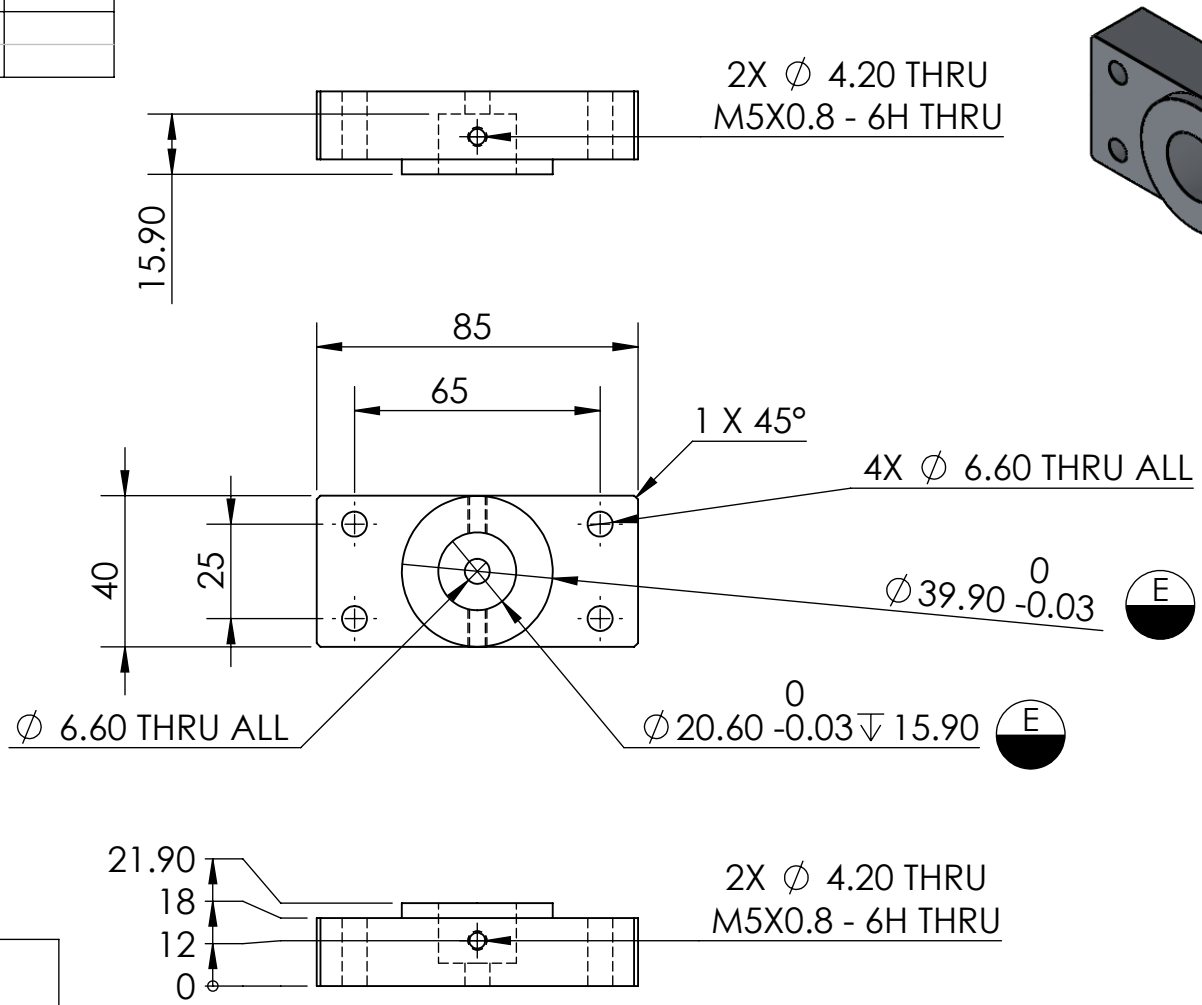

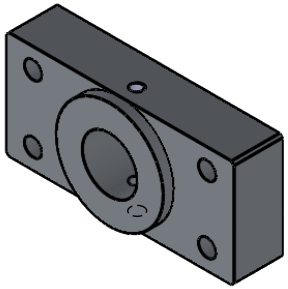

QUALITY

AUTHORIZE | TALLER

NOTES: DEJAR PIEZA LIBRE DE REBABA Y MATAR FILOS.

SHEET 1 OF 1

TOTAL OF PIECES	1 Pzas.
ANG. PRO	

REV	DESCRIPTION	DATE	APPROVED

REVIEWS

UNLESS OTHERWISE SPECIFIED

TOLERANCES DIMENSIONS ISO 2768-1 mK-E ASME Y14.5M-1994

MM	INCHES	ANGLES
+.1 -.1	+.004 -.004	+1°-1°

MATERIAL: ACERO INOX

SURFACE TREATMENT: Pulido

HARDNESS: N.A.

EOLT006-P1-015

E **MEDIDA ESPECIAL**

APPROVALS	DATE
DESIGNER MASL	06/MAY/2022
REVIEW MA	06/MAY/2022

ALL TECHNICAL DATA DISCLOSED HERE IN IS THE PROPERTY OF JOYSON SAFETY SYSTEMS AND SHALL NOT BE USED BY ANY OTHER MANUFACTURER, PROCUREMENT OR DISCLOSURE WITHOUT WRITTEN PERMISSION OF THE OWNMER.

JOYSON SAFETY SYSTEMS

JOYSON TECHNICAL CENTER

MODEL NAME: EOLT006-P1 | SERIES No: M2022-032

MACHINE NAME: EOL TEST

PART NUMBER: EOLT006-P1-015

SIZE	PART NAME	REV.
A	PART 015	A

ESCALE 1:1 **DRAWING IN** MM

JSSAM-JTC-MF-FM-0002-001