NAME	DATE	TIME (HRS)

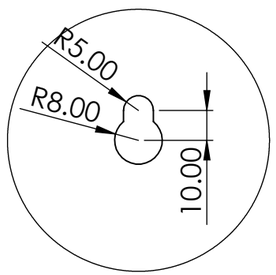

DETAIL A
SCALE 1 : 2

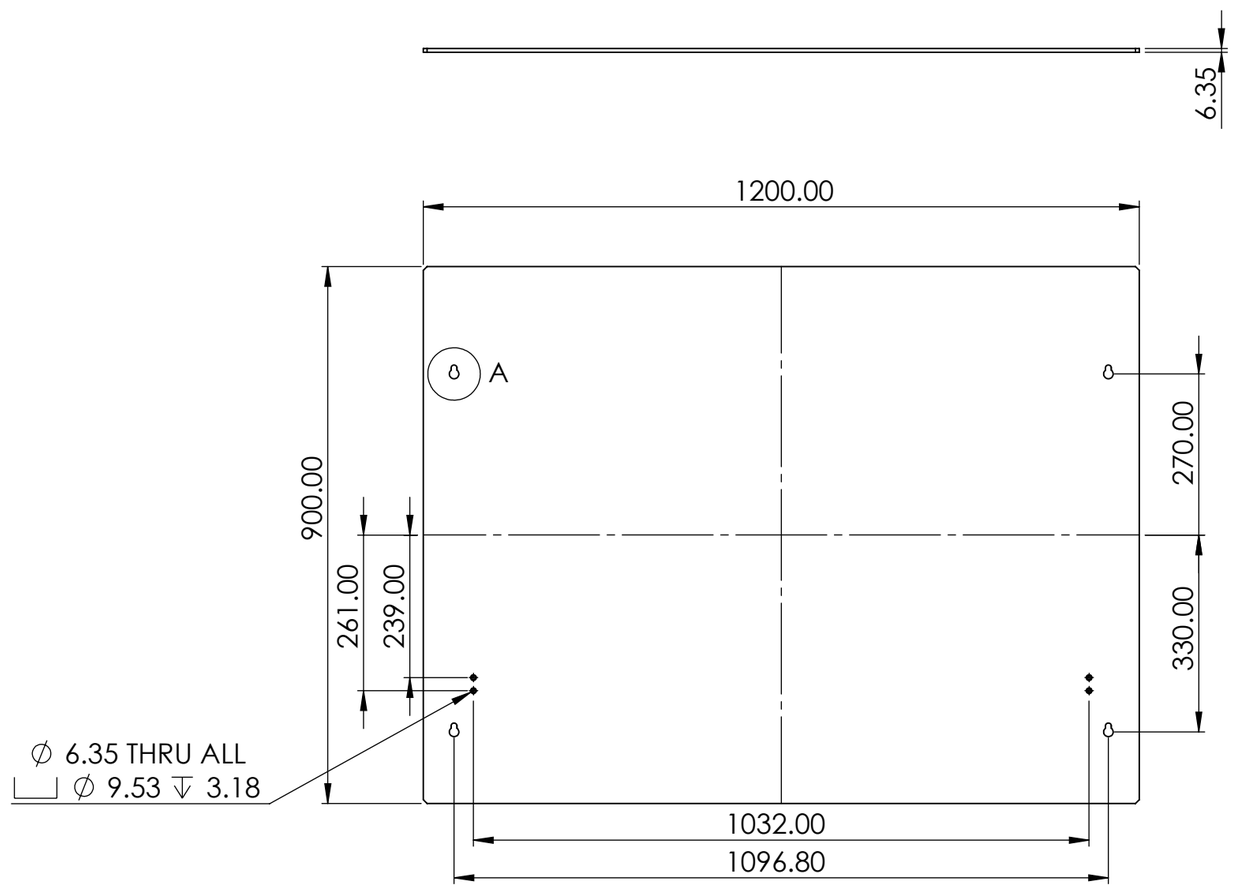

IC002-TRN-200-003

PAG. 1 de 1

E MEDIDA ESPECIAL

ALL TECHNICAL DATA DISCLOSED HERE IN IS THE PROPERTY OF JOYSON SAFETY SYSTEMS AND SHALL NOT BE USED BY ANY OTHER MANUFACTURER, PROCUREMENT OR DISCLOSURE WITHOUT WRITTEN PERMISSION OF THE OWNMER.

AUTHORIZE	TALLER	QUALITY

NOTES:
Pieza libre de filos y rebabas.

REV	DESCRIPTION	DATE	APPROVED

REVIEWS

TOTAL OF PIECES: 2 Pza.
ANG. PROF

UNLESS OTHERWISE SPECIFIED
TOLERANCES DIMENSIONS: ISO 2768-1 mK-E ASME Y14.5M-1994

MM	INCHES	ANGLES
+.1 -.1	+.004 -.004	+1° -1°

MATERIAL: Polycarbonate - Negro
SURFACE TREATMENT: N.A.
HARDNESS: N.A.

JOYSON SAFETY SYSTEMS

APPROVALS		DATE
DESIGNER	JLOV	3/12/2021
REVIEW	RVM	3/12/2021

JOYSON TECHNICAL CENTER

MODEL NAME	IC002-TRN	SERIES No	M2021-004
MACHINE NAME	Inpectio Cell AFI		
PART NUMBER	IC002-TRN-200-003		
SIZE **B**	PART NAME: Lateral Frame Cover		REV. **A**
ESCALE: 1:10		DRAWING IN MILLIMETERS	

JSSAM-JTC-MF-FM-0002-001