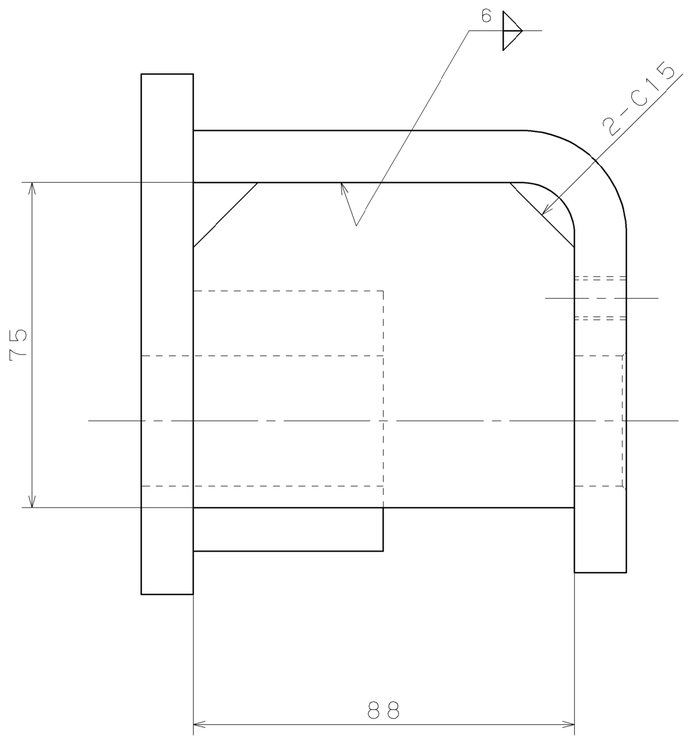

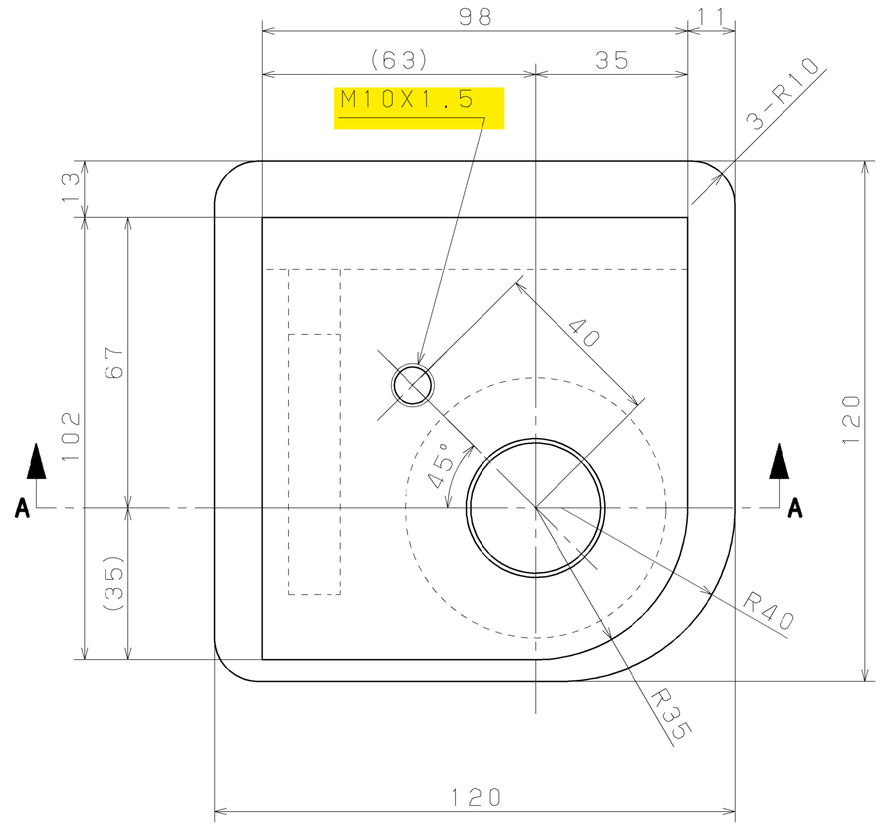

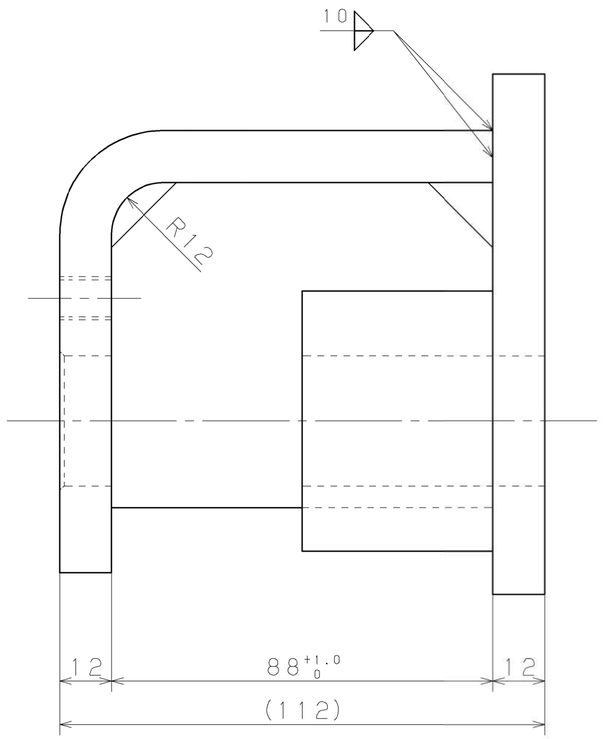

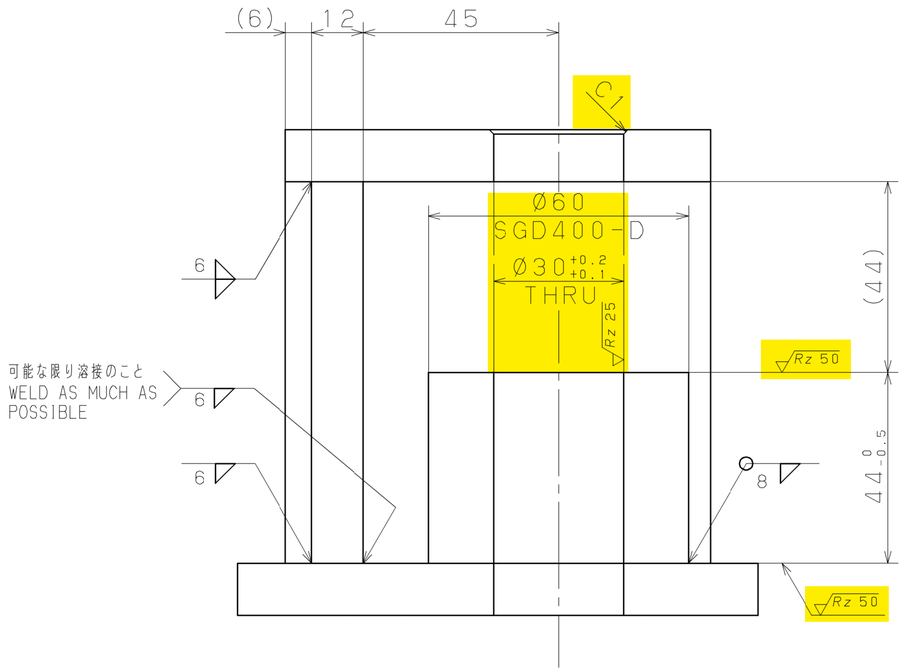

SECTION A-A

PART NAME	MATERIAL	Q'TY	MASS
ANCHOR	SS400	1	4.14 kg

MODEL	
421TB	FRAME (FRONT)

SCALE	DRAWING NUMBER (PART NUMBER)
1:1	1421-61079-0 -20365-0

AST Advanced Steel Technology