ITEM	QTY	DESCRIPTION
(A) 1	1	1/8 x TO SUIT 1018 C.R.S.
2	1	Ø3/4 x 5/16 LG. AISI 1018 CRS
(A) 3	1	1/8 x TO SUIT 1018 C.R.S.

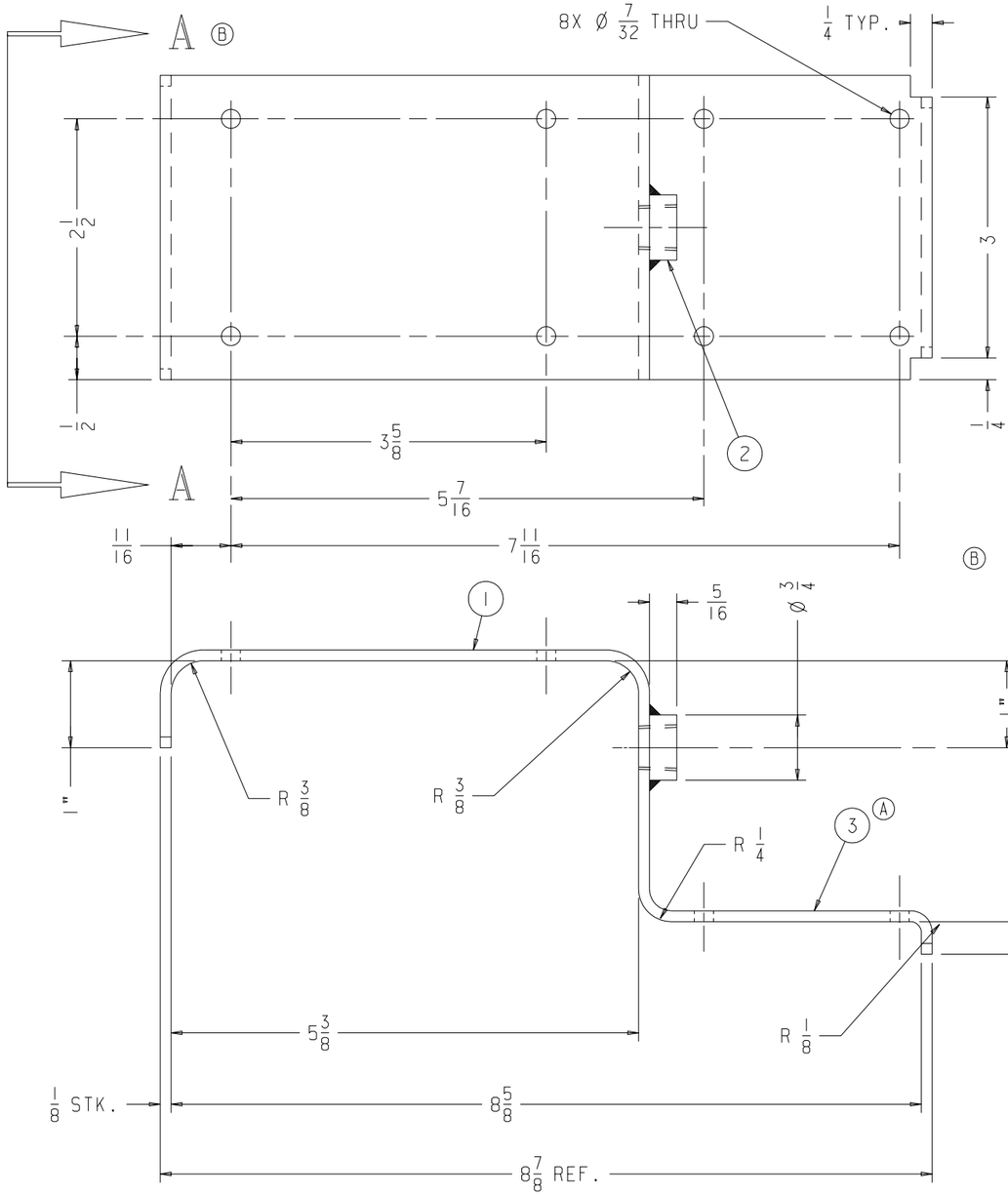

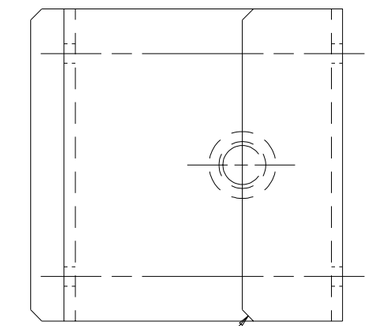

VIEW A – A (B)

(B) 1/8 x 45° CHAMFER TYP.

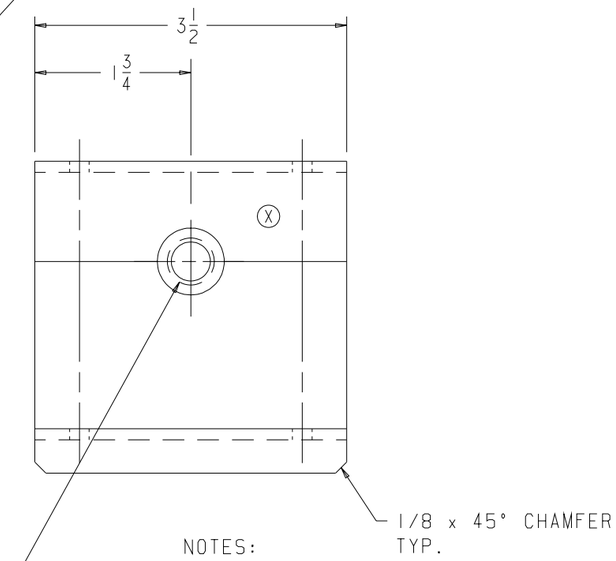

F355067

NOTES:

1.) USE GOB DEFLECTOR D/G DWG. No. OIS-204-3625 & OIS-204-3629.
2.) WELDED CONSTRUCTION AND AIR TIGHT TO 50 PSI.

B	9-23-05		
A	5-7-04		
CHANGES			

"INFORMATION CONTAINED HEREIN CONSTITUTES PROPRIETARY CONFIDENTIAL AND TRADE SECRET INFORMATION OF OWENS-ILLINOIS, INC., AND IS TO BE ACCEPTED SUBJECT TO THAT UNDERSTANDING. IT IS TO BE KEPT CONFIDENTIAL AND NOT TO BE COPIED, USED, OR CONVEYED TO OTHERS WITHOUT OWENS-ILLINOIS' WRITTEN AUTHORIZATION."

PART TOLERANCES UNLESS OTHERWISE NOTED
MAXIMUM FINISHED SURFACE ROUGHNESS: 125
FINISHED DIMENSION TOLERANCES:
ALL FRACTIONAL DIMENSIONS: ±.015
DECIMAL X.X = ±.031 ANGULAR X = ±1°
X.XX = ±.010 X.X = ±.5°
X.XXX = ±.005 X.XX = ±.25°
UNSPECIFIED THREADS ARE CLASS 2, BREAK ALL SHARP EDGES 1/32 MAX. & MARK PART NO. AT (X)

PART NAME:	PLENUM COVER PLATE		
MATERIAL:	SEE BILL OF MATERIAL		
TREATMENT:			
DRAWN:	PA/DAS	SCALE:	FULL
CHECKED:		DATE:	10-1-03

X | ANVIL | ANNOTATOR | 3D MODEL

OWENS-ILLINOIS
GLOBAL GLASS TECHNOLOGY

DRAWING NUMBER
OIS-204-3628

UNITS: INCHES | SHEET NO.:

USED ON: OIS-03020

TBC

OWENS-ILLINOIS
GLOBAL GLASS TECHNOLOGY

TYPE
1 - PATTERN
2 - MATERIAL
3 - DIMENSION
4 - FINISH
5 - CORRECTION
6 - PARTS LIST
7 - COMBINATION
8 - OTHER

EFFECTIVITY
F - NEXT MANUFACTURED LOT
P - IN PROCESS
UP TO AFFECTED OPERATION + 'F'
U - UNASSEMBLED PARTS - IN PROCESS, STORES, ASSEMBLY FLOOR + 'P'
A - PARTS IN ASSEMBLIES IN U
T - PARTS OR ASSEMBLIES IN MACHINES + 'A'
S - SPECIAL INSTRUCTIONS, MACHINE NO.'S, ETC. FOR HARD PARTS, MACHINE NO.'S, ETC.
R - RECORD ONLY

E.C.N. NO. 2788

CODE
T 5
E P

DRAWING NUMBER OIS-204-3628

CHANGE LETTER B

CHANGED BY MGM

CHANGE DESCRIPTION & REASON:

- ADDED VIEW A-A TO SHOW 1/8 x 45° CHAMFER WHICH WAS PREVIOUSLY MISSING.

REASON: CORRECTION.