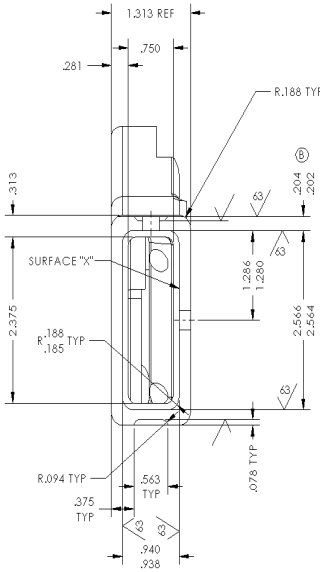

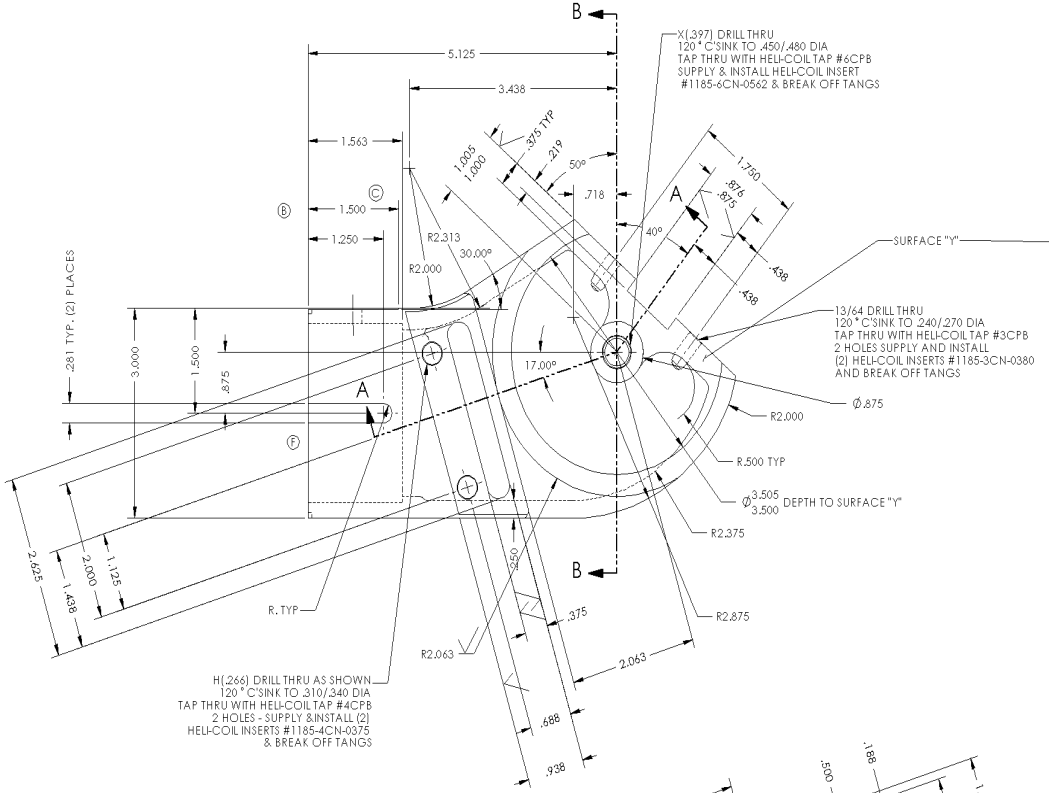

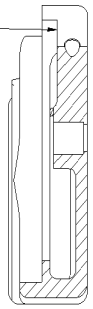

SECTION B-B

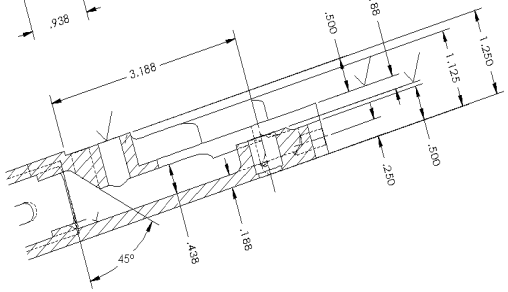

SECTION A-A

NOTES:

(E) CASTING MUST BE PRESSURE TIGHT AT 30 PSI

REMOVE ALL SHARP EDGES

MARK WITH PART NUMBER

APPROXIMATE WEIGHT = 2.87 LBS

ALL CASTING RADII & FILLETS TO BE .06 R
UNLESS OTHERWISE SPECIFIED

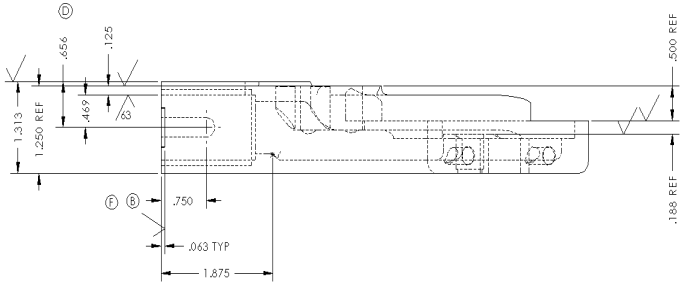

REF ASSEMBLY LIST
HE-0686
HE-0623

REPORT CHANGES TO ENGINEERING DEPARTMENT
WORK TO DIMENSIONS SCALE SCALE PLOT

UNLESS OTHERWISE SPECIFIED:

UNITS ARE DECIMAL INCH
TOLERANCE ON ALL DIMENSIONS ARE:

ENGLISH DIMENSIONS:
X.X ± .080
X.XX ± .020
X.XXX ± .010

METRIC DIMENSIONS:
X mm ± .2 mm
X.X mm ± .5 mm
X.XX mm ± .25 mm

CHAMFER BORED & REAMED HOLES:
1/32 x 45° UP TO .38 DIA.
1/16 x 45° OVER .38 DIA.
CHAMFER TAPPED HOLES TO DEPTH OF ONE THREAD

SURFACE ROUGHNESS AOT TO EXCEED
125 OR FINISHED SURFACES
OR GROUND SURFACES

NOTICE

INFORMATION CONTAINED HEREIN CONSTITUTES PROPRIETARY CONFIDENTIAL INFORMATION OF LIBBEY, INC, AND IS TO BE ACCEPTED ONLY SUBJECT TO THAT UNDERSTANDING. IT IS TO BE KEPT CONFIDENTIAL AND NOT TO BE COPIED, USED, OR CONVEYED TO OTHERS WITHOUT THE EXPRESSED WRITTEN CONSENT OF LIBBEY, INC.

REV.	DESCRIPTION	BY	DATE
F	2 SLOTS WERE 3 HOLES	mazuvbt	9/18/2007
E	REMOVED INCORRECT 4140 INVESTMENT CASTING NOTE AND SUPPLIER	GLP	9/97
D	ADDED .656 DIM AND FINISH MARK	GLP	7/97
C	1.500 WAS 1.375	GLP	6/97
B	REDRAWN ON CAD WITH REVISIONS	GLP	9/96
A	SEE DRWG. CHANGE NOTICE	JFB	4/85

REVISIONS

MATERIAL
ALMAG 35

MODELED T SMITH SAVED 9/20/2007
DRAWN JFB 9-83

Libbey®
CORPORATE OFFICES
TOLEDO, OHIO
WWW.LIBBEY.COM

STANDARD TAKEOUT ARM PLATEN (QUICK CHANGE)

TAKEOUT ARM ASSEMBLY (QUICK CHANGE)

SCALE: 1:1 SIZE D DRAWING NUMBER HE-8694 SHEET 1 OF 1