General Dimension Tolerance			
0 ~ 4	± 0.1	16 ~ 63	± 0.3
4 ~ 16	± 0.2	63 ~	± 0.5

REVISIONS			
REV.	DESCRIPTION	DATE	APPROVED
1	REMOVE MATERIAL	23/02/2022	J.D.

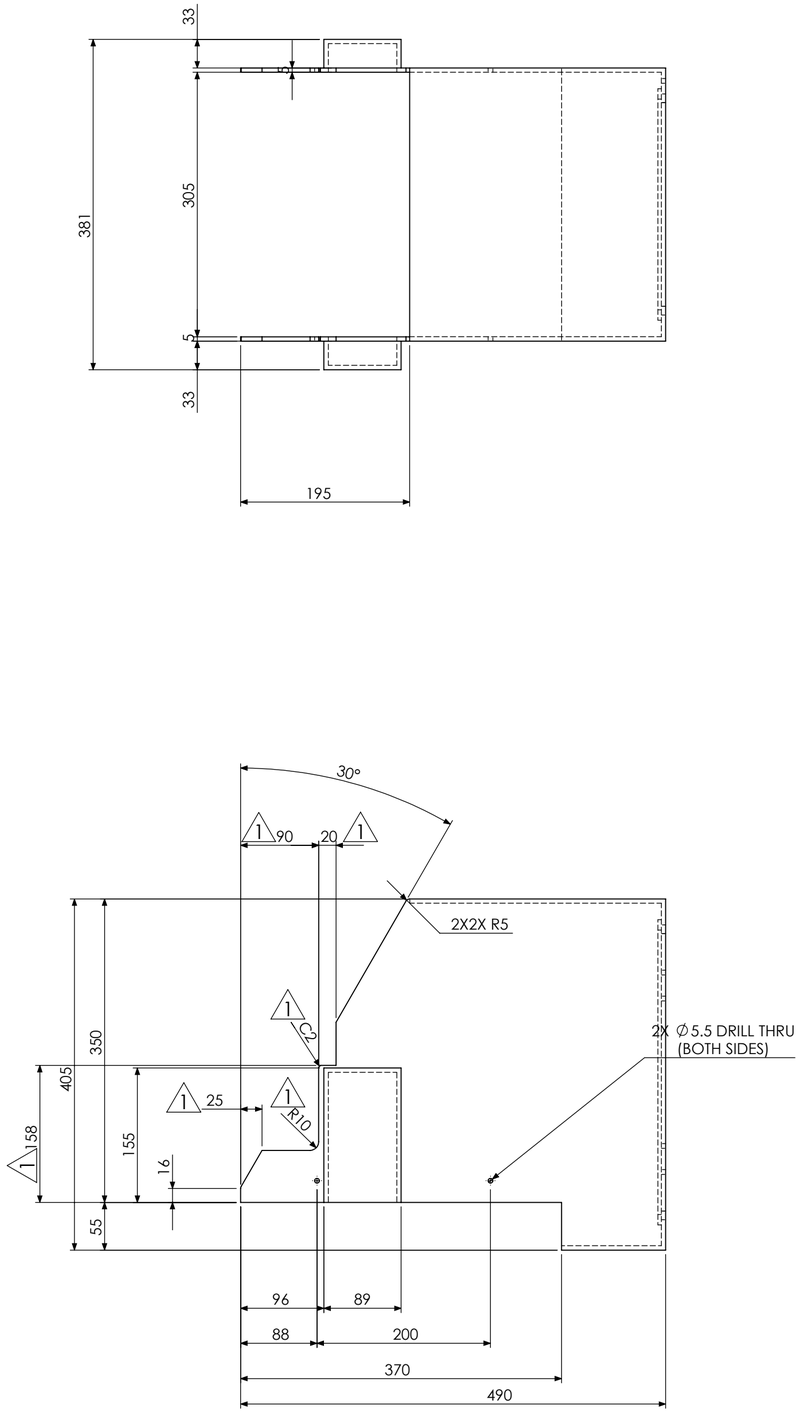

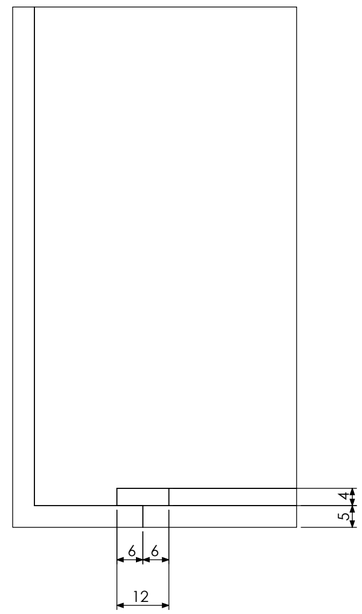

SECTION A-A
SCALE 1 : 1

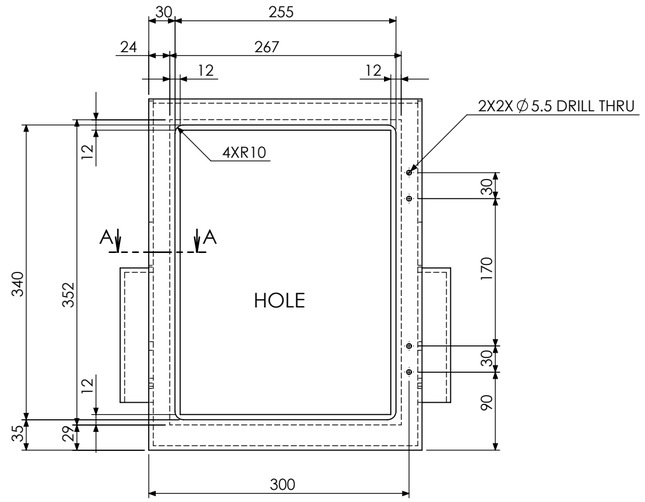

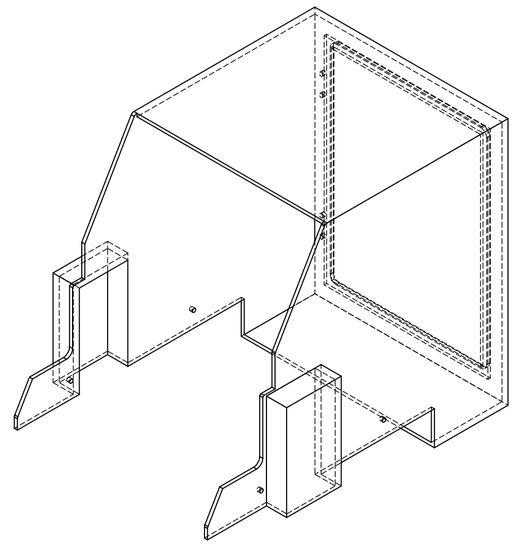

SURFACE TREATMENT	HEAT TREATMENT	WEIGTH
		1

MATERIAL:	RESEMBLANCE PART No.	IMPO CODE	I/O CODE
POLYCARBONATE (BLACK)			

PART NAME: COVER

DENSO MEXICO

APPROVED	CHECKED	CHECKED	DESIGNED	DRAWN
				RT

DWG NO. M-0951896-161 | A2 | ASP CODE | SHEET 1 OF 1

QTY.: 1 | No.: 16 | SCALE:1:5

CONFIDENTIAL