ITEM NO.	ITEM QTY.	MAT'L DESCRIPTION	MAT'L QTY.	MAT'L PART NO.
2 1	1	.50" HR PL	42 LBS	WPL50
2 2	1	2" OD X 1-1/2" ID TUBING	1.7 FT	01779
2 3	2	.50" HR PL	1 LBS	WPL50
4	2	BEARING #FB-2024-12	EA	46237
2 # 5	1	GROUNDING PAD	EA	ZGP82141

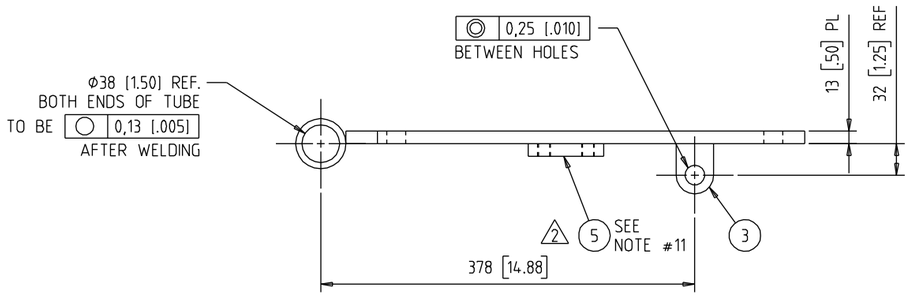

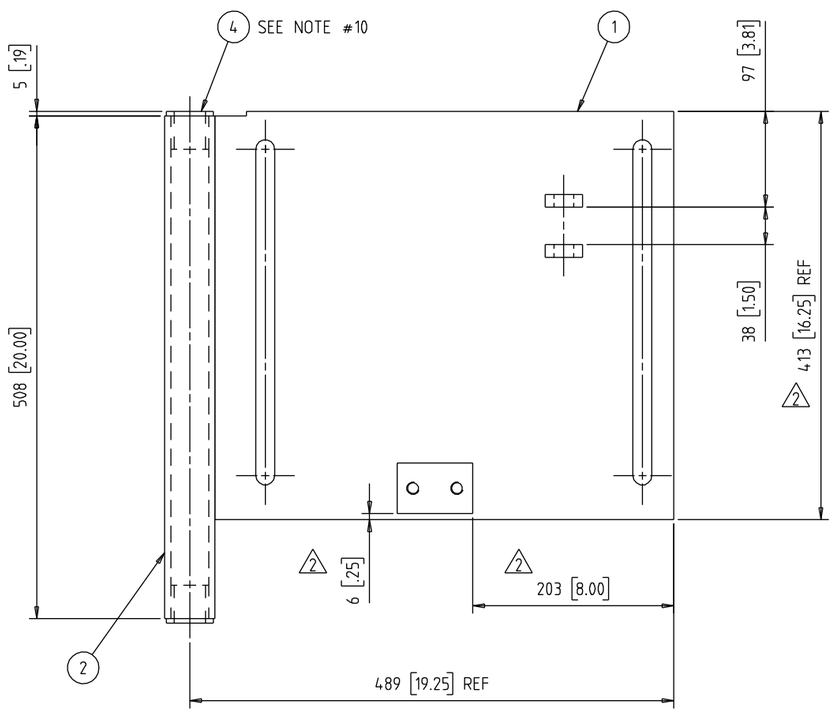

2 MATERIAL : WARMAN CODE E02 UNLESS OTHERWISE SPECIFIED.
ESTIMATED MASS : 22,2 kg / 49 lbs

NOTES:
1.) ALL STEEL TO BE ASTM A36 EXCEPT AS NOTED.
2.) WELDING MUST CONFORM TO CYCLICALLY (DYNAMICALLY) LOADED STRUCTURES OF THE AWS D1.1/D1.1M CODE.
3.) ALL SEAMS TO BE WELDED 6 [.25] CONTINUOUS FILLET UNLESS OTHERWISE SPECIFIED.
4.) ONLY QUALIFIED OR PREQUALIFIED WELDING PROCEDURE SPECIFICATIONS (WPS) MAY BE USED IN WELDING.
5.) WELDERS MUST BE CERTIFIED FOR THE PROCESS AND POSITION BEING USED.
6.) ALL WELDMENTS ARE SUBJECT TO VISUAL INSPECTION BY A C.W.I.
7.) REMOVE ALL BURRS AND SHARP EDGES.
8.) SURFACE PREPARATION AND PAINTING PROCEDURE SHOULD BE IN ACCORDANCE WITH APPLICABLE SECTIONS OF THE STRUCTURAL STEEL PAINT COUNCIL SPECIFICATIONS.
9.) STAMP PART NO. USING 8 [.31] HIGH NUMERALS.
10.) BRONZE BEARING ITEM #4 TO BE INSTALLED INTO TUBING AFTER WELDING.
11.) # = "G" IN PART NUMBER INDICATES MOTOR BRACKET WITH GROUNDING PAD OPTION.
12.) DIMENSIONS SHOWN THUS [ ] ARE IN INCHES.

REV	DESCRIPTION	BY	DATE	CHK
4				
3				
2	ADDED DETAILS TO SHEET #2; REDRAWN ON UG; ADDED 'G' GROUNDING PAD OPTION; ADDED NOTES, DIMENSIONS SHOWN & BOM #1, 2 & 3 - DR119612MAD	KDS	MAR.4,2014	EAK
1	REDRAWN ON CAD WITHOUT DESIGN CHANGE - ECN06368	AV	NOV.1,1990	BT

FOR LIMITS OF UNTOLERANCED DIMENSIONS REFER TO DRG. A388878.

OFFICE OF ORIGIN : MADISON

SCALE: --
APP: AGS
CHK: BT
DRN: A.V.
DATE: JAN.31,1990
SHEET 1 OF 2

Copyright © Weir Slurry Group, Inc. 2014
Weir Slurry Group, Inc. ("The Company") is the owner of the copyright and all confidential information in this drawing.
The drawing must not be copied in whole or in part, in any form or by any means, and the information in it must not be disclosed to any person, or used for any purpose other than the specific purpose for which it has been provided, without the prior written consent of the Company.

PRODUCT
WARMAN®
Centrifugal Slurry Pumps

WEIR MINERALS

TITLE :
MOTOR BRACKET
#2 BEARING ASSEMBLY
22191#

DRAWING No C2SRK5115-1
REV 2

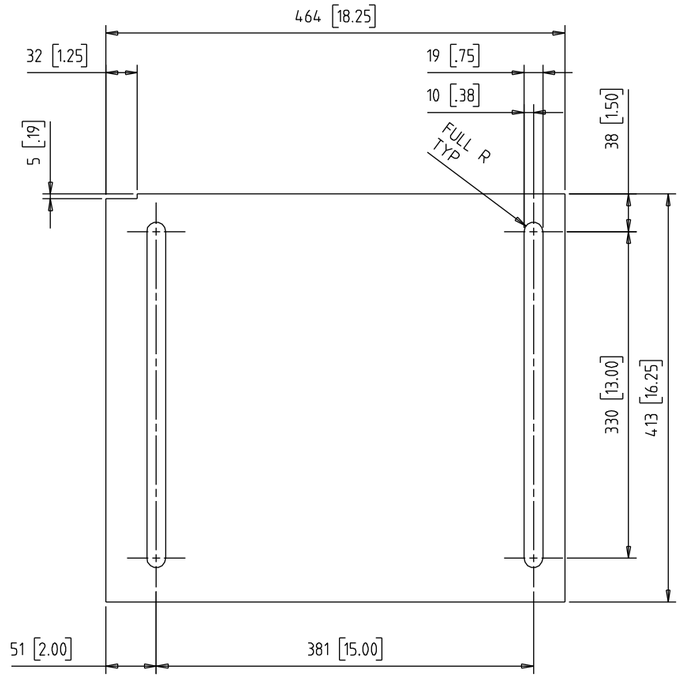

DETAIL ITEM #1

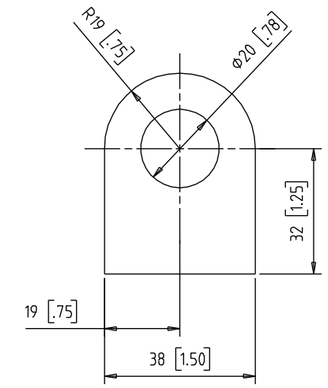

DETAIL ITEM #3

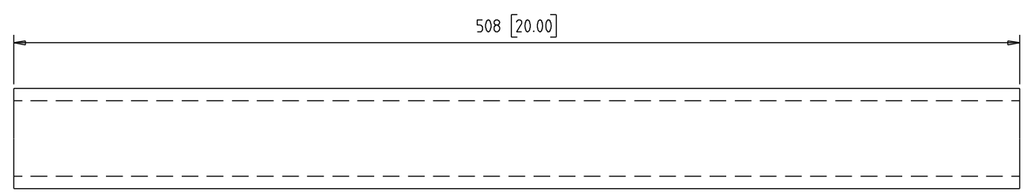

DETAIL ITEM #2

REV	DESCRIPTION	BY	DATE	CHK
4				
3				
2	ADDED DETAILS TO SHEET #2; SEE SHEET #1 - DR119612MAD - DR119612MAD	KDS	MAR.4,2014	EAK
1	REDRAWN ON CAD WITHOUT DESIGN CHANGE - ECN06368	AV	NOV.1,1990	BT

FOR LIMITS OF UNTOLERANCED DIMENSIONS REFER TO DRG. A388878.

OFFICE OF ORIGIN :
MADISON

SCALE: --
APP: AGS
CHK: BT
DRN: A.V.
DATE: JAN.31,1990
SHEET 2 OF 2

Copyright © Weir Slurry Group, Inc. 2014
Weir Slurry Group, Inc. ("the Company") is the owner of the copyright and all confidential information in this drawing.
The drawing must not be copied in whole or in part, in any form or by any means, and the information in it must not be disclosed to any person, or used for any purpose other than the specific purpose for which it has been provided, without the prior written consent of the Company.

PRODUCT
WARMAN®
Centrifugal Slurry Pumps

WEIR MINERALS

TITLE :
MOTOR BRACKET
#2 BEARING ASSEMBLY
22191#

DRAWING No C2SRK5115-1

REV 2