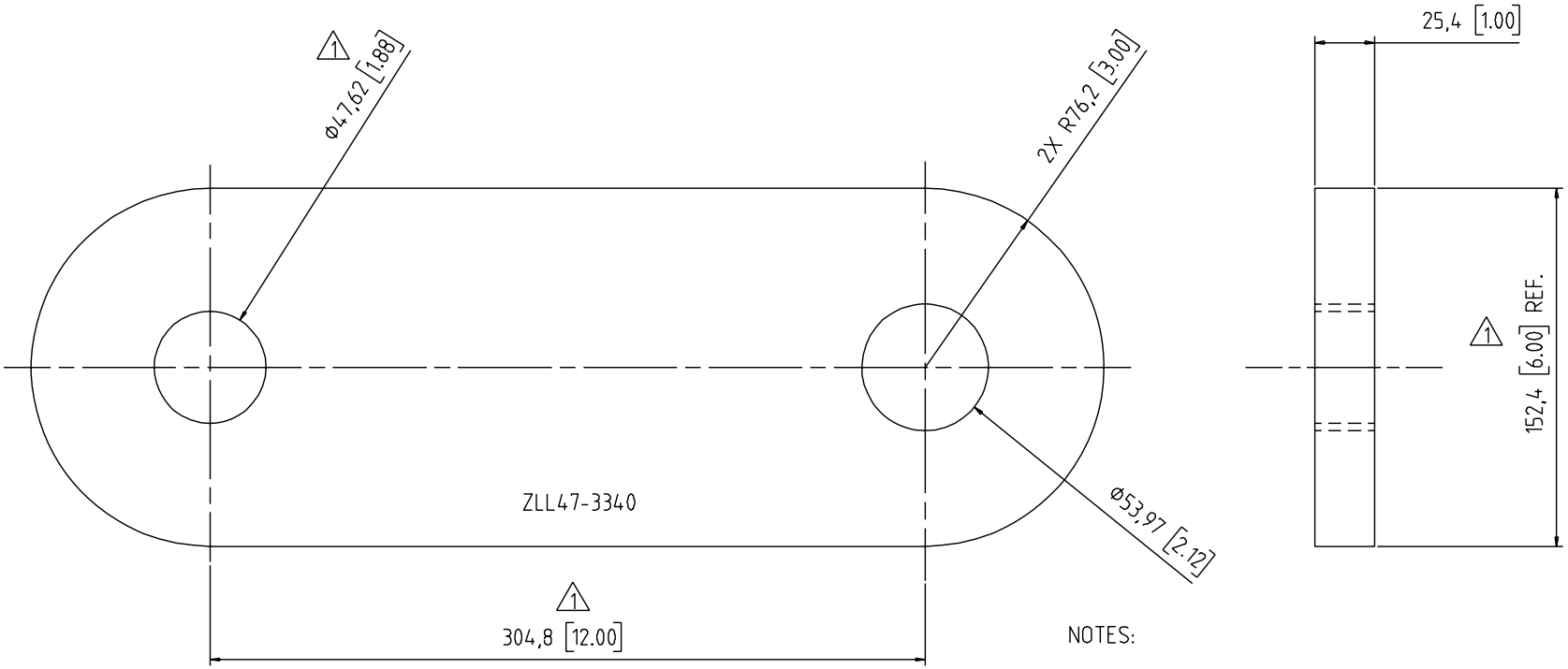

NOTES:

1. REMOVE ALL BURRS AND SHARP EDGES.
2. DIMENSIONS SHOWN THUS [ ] ARE IN INCHES.
3. STAMP PART NO. USING 10,0 [.38] HIGH LETTERS IN AREA SHOWN.

MATERIAL: WARMAN CODE E62 UNLESS OTHERWISE SPECIFIED.
ESTIMATED FINISHED WEIGHT: 12.0 KG [26.6] LBS
ENCUMBRANCE: 457,2 [18.0] X 152,4 [6.0] X 25,4 [1.0]

UNLESS OTHERWISE SPECIFIED: (FABRICATION)	UNLESS OTHERWISE SPECIFIED: (MACHINING)
TOLERANCE ON FABRICATION DIMENSIONS: LESS THAN 1219 [48"] ± 3 [.12"]; 1219 [48"] TO 3048 [120"] ± 6 [.25"]; OVER 3048 [120"] ± 9,5 [.37"]	TOLERANCE ON MACHINING DIMENSIONS: 0,X ± 1,524 [.060]; 0,XX ± 0,762 [.030]; 0,XXX ± 0,254 [.010]; 0,XXXX ± 0,127 [.005]; ANGULAR ± 1°
	ALL CONCENTRIC CIRCLES: ⊚ 0,25 [.010] T.I.R.
	ALL PERPENDICULAR SURFACES: ⊥ 0,05 [.0021] INCH
	BREAK OR DEBURR ALL SHARP EDGES
	INTERNAL CORNERS 0,000 [.000]/0,813 [.032] R.
	MACHINED SURFACES 3,2 [125]

Copyright © Weir Slurry Group Inc. 2007

Weir Slurry Group Inc. ("the Company") is the owner of the copyright and all confidential information in this drawing. The drawing must not be copied in whole or in part, in any form or by any means, and the information in it must not be disclosed to any person, or used for any purpose other than the specific purpose for which it has been provided, without the prior written consent of the Company.

No.	DESCRIPTION	BY	DATE	CHK
5				
4				
3				
2				
1	12.00 WAS 6.00, 6.00 WAS 5.00, 1.88 Ø WAS 1.25 DR102041	SDA	Jan.29.2007	MW

REVISIONS

APP.	KCB
CHECK	MW
DRN.	S.D.AST
DATE	JAN.27,2007
SCALE	

PRODUCT : WARMAN PUMP

TITLE : LIFTING LUG FOR 12SRA5100 PUMP P/N: ZLL47-3340

WEIR MINERALS NORTH AMERICA
DESIGN CENTRE OF ORIGIN : MADISON

DRAWING No. 47-3340

REV. 1