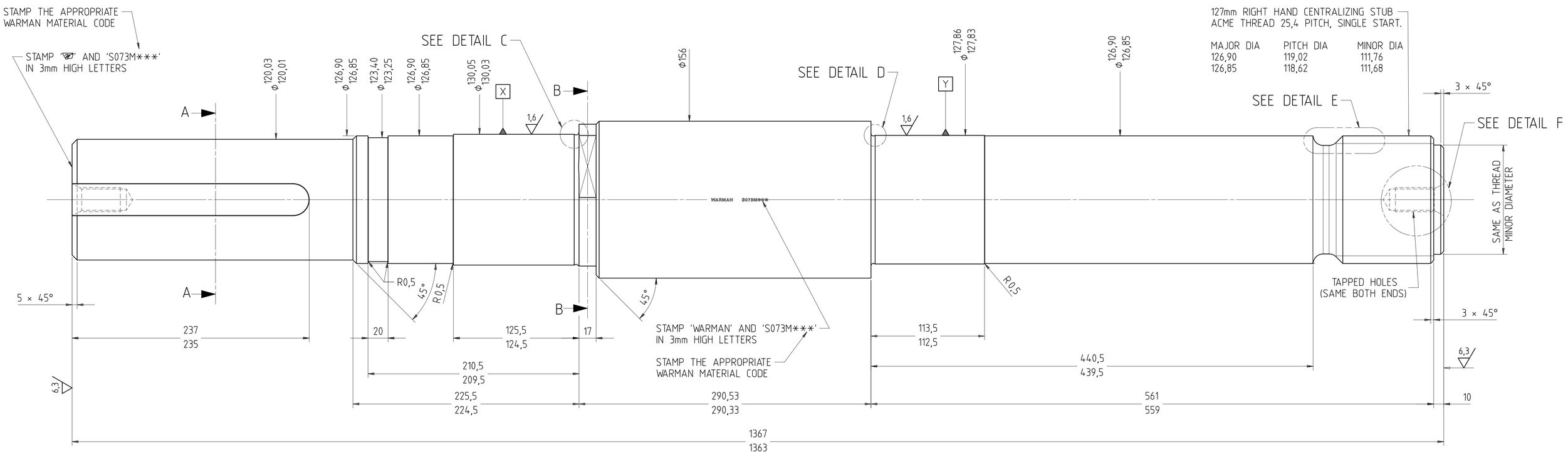

NOTE : 1. MACHINE 3,2 ALL OVER, UNLESS OTHERWISE SPECIFIED.
2. ALL MACHINED DIAS ⊕ ∅ 0,02 X-Y TURN BETWEEN CENTRES.
3. REMOVE ALL BURRS AND SHARP EDGES.
4. ALL RADII MUST BE POLISHED.

MATERIAL : WARMAN CODE E05 UNLESS OTHERWISE SPECIFIED.
ESTIMATED MASS : 146 kg.
ENCUMBRANCE : 1370 × 156 × 156

FOR LIMITS OF UNTOLERANCED DIMENSIONS REFER TO DRG. A4-15895.

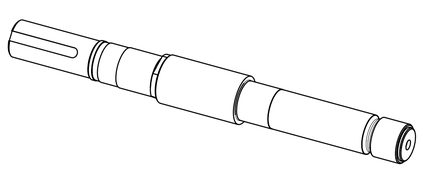

Copyright © Weir Warman Ltd 1974-2004

Weir Warman Ltd ("the Company") is the owner of the copyright and all confidential information in this drawing. The drawing must not be copied in whole or in part, in any form or by any means, and the information in it must not be disclosed to any person, or used for any purpose other than the specific purpose for which it has been provided, without the prior written consent of the Company.

No.	DESCRIPTION	BY	DATE	CHK
15				
14				
13				
12				
11	REDRAWN AND UPDATED ON CAD. φ145 STEP REMOVED.	AMM	MAR.1,2004	GNC

REVISIONS

APP.	J.ALIPRANDI
CHECK	A.PINNEY
DRN.	R.HEUSSLER
DATE	MAY.8,1974
SCALE	1:2(2:1, 1:1)

PRODUCT : WARMAN PUMP

TITLE : SHAFT S073M***

WEIR MINERALS

WEIR WARMAN LTD
DESIGN CENTRE OF ORIGIN :
PUMP TECHNOLOGY CENTRE SYDNEY

DRAWING No. A1– 110 –0–1277

REV. 11