NAME	DATE	TIME (HRS)

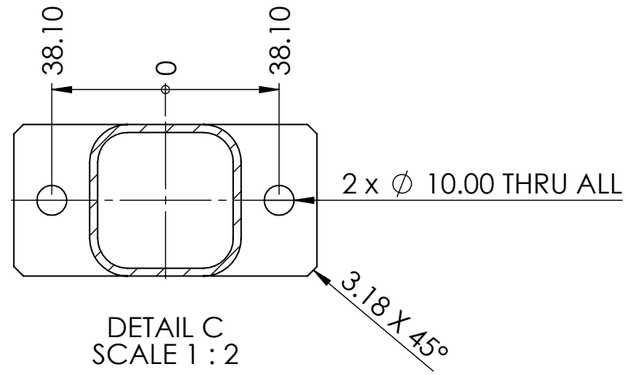

DETAIL C
SCALE 1 : 2

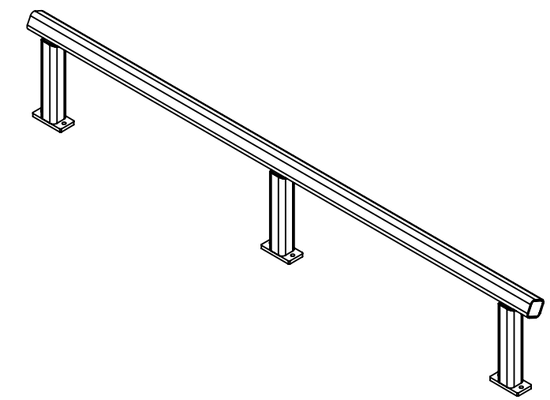

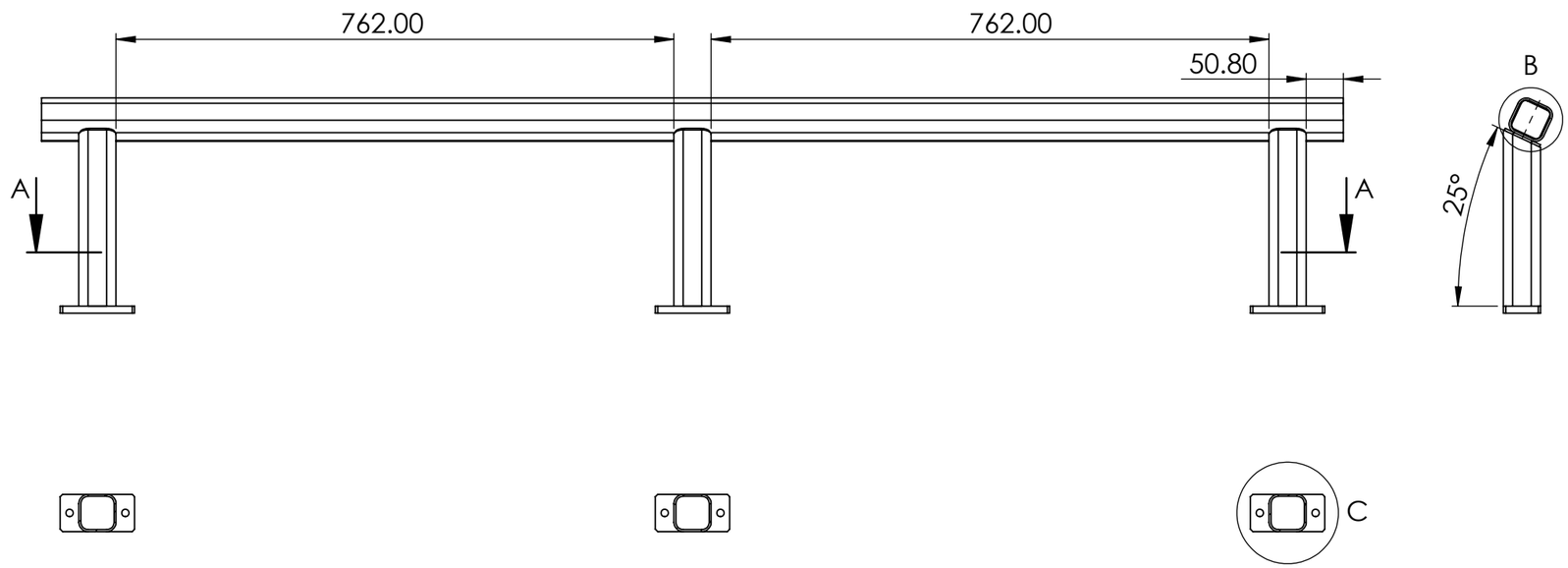

SECTION A-A
SCALE 1 : 8

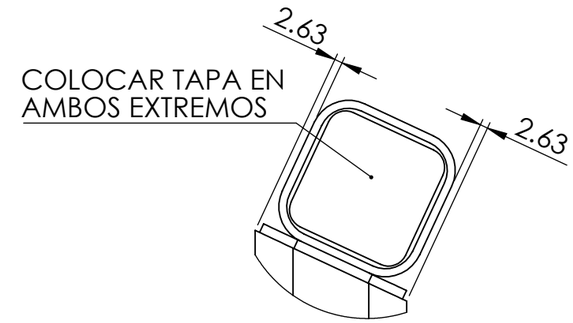

DETAIL B
SCALE 1 : 2

MDM001-TRN-1000-001

PAG. 1 de 2

MEDIDA ESPECIAL

ALL TECHNICAL DATA DISCLOSED HERE IS PROPERTY OF **TAKATA** SEAT BELTS INC. AND SHALL NOT BE USED BY ANY OTHER MANUFACTURER, PROCUREMENT OR DISCLOSURE WITHOUT WRITTEN PERMISSION OF THE OWNER

AUTHORIZE	TALLER	QUALITY

NOTES:

REV	DESCRIPTION	DATE	APPROVED

REVIEWS

TOTAL OF PIECES	1 Pza.
ANG. PROF	

UNLESS OTHERWISE SPECIFIED

TOLERANCES DIMENSIONS	ISO 2768-1 mK-E ASME Y14.5M-1994	
MM	INCHES	ANGLES
+.1 -.1	+.004 -.004	+1° -1°

MATERIAL:	PTR 2x2" Cal. 12
SURFACE TREATMENT	Color "Joyson"
HARDNESS	N.A.

TAKATA

APPROVALS		DATE
DESIGNER	LGG	09-Apr-19
REVIEW	JEC	09-Apr-19

TAKATA MONTERREY TECHNICAL CENTER

MODEL NAME	MDM001-TRN	SERIES No	M2019-067
MACHINE NAME	Dobladora Manual		
PART NUMBER	MDM001-TRN-1000-001		
SIZE **B**	PART NAME MDM001-TRN-1000-001		REV. **A**
ESCALE: 1:10		DRAWING IN MILLIMETERS	

NAME	DATE	TIME (HRS)

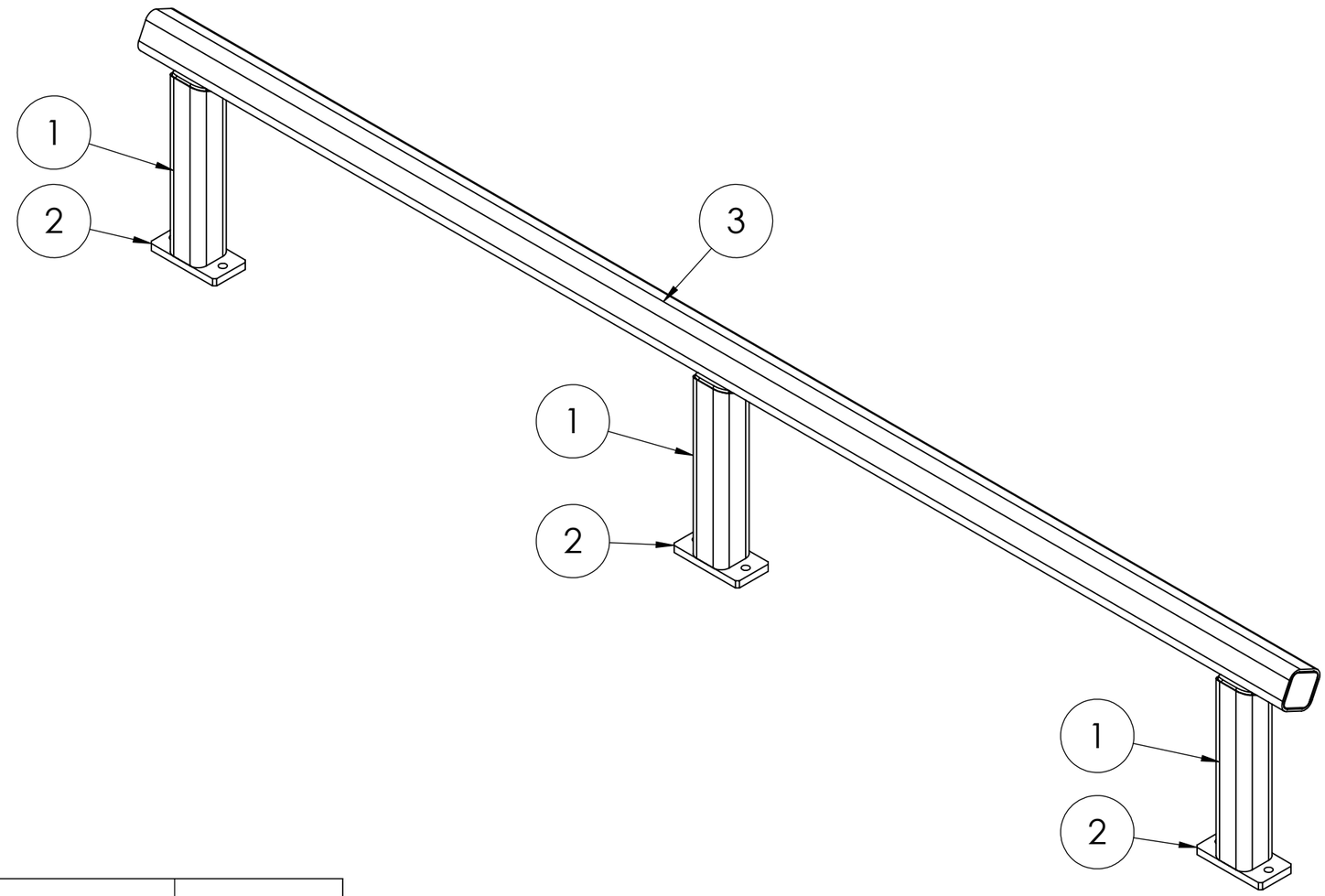

ITEM NO.	QTY.	DESCRIPTION	LENGTH
1	3	TUBE, SQUARE 50.80 X 50.80 X 2.67	240.475
2	3	FLAT BAR 50.80 X 9.53	101.6
3	1	TUBE, SQUARE 50.80 X 50.80 X 2.67	1778

MDM001-TRN-1000-001

PAG. 2 de 2

MEDIDA ESPECIAL

ALL TECHNICAL DATA DISCLOSED HERE IS PROPERTY OF **TAKATA** SEAT BELTS INC. AND SHALL NOT BE USED BY ANY OTHER MANUFACTURER, PROCUREMENT OR DISCLOSURE WITHOUT WRITTEN PERMISSION OF THE OWNER

AUTHORIZE | TALLER | QUALITY

NOTES:

REV	DESCRIPTION	DATE	APPROVED

REVIEWS

TOTAL OF PIECES: 1 Pza.

ANG. PROF

UNLESS OTHERWISE SPECIFIED

TOLERANCES DIMENSIONS: ISO 2768-1 mK-E ASME Y14.5M-1994

MM	INCHES	ANGLES
+.1 -.1	+.004 -.004	+1° -1°

MATERIAL: PTR 2x2" Cal. 12

SURFACE TREATMENT: Color "Joyson"

HARDNESS: N.A.

TAKATA

APPROVALS		DATE
DESIGNER	LGG	09-Apr-19
REVIEW	JEC	09-Apr-19

TAKATA MONTERREY TECHNICAL CENTER

MODEL NAME	MDM001-TRN	SERIES No	M2019-067
MACHINE NAME	Dobladora Manual		
PART NUMBER	MDM001-TRN-1000-001		
SIZE B	PART NAME MDM001-TRN-1000-001		REV. A
ESCALE: 1:10		DRAWING IN MILLIMETERS	

TKH-MTC-MF-FM-0016-004