NAME	DATE	TIME (HRS)

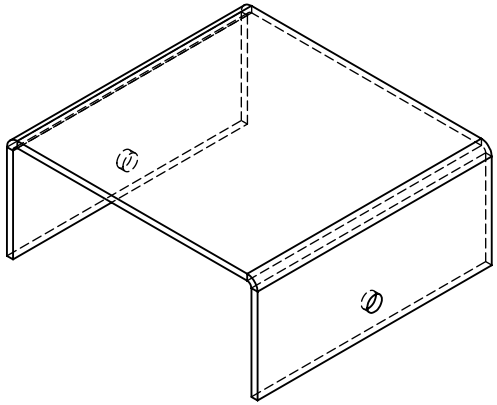

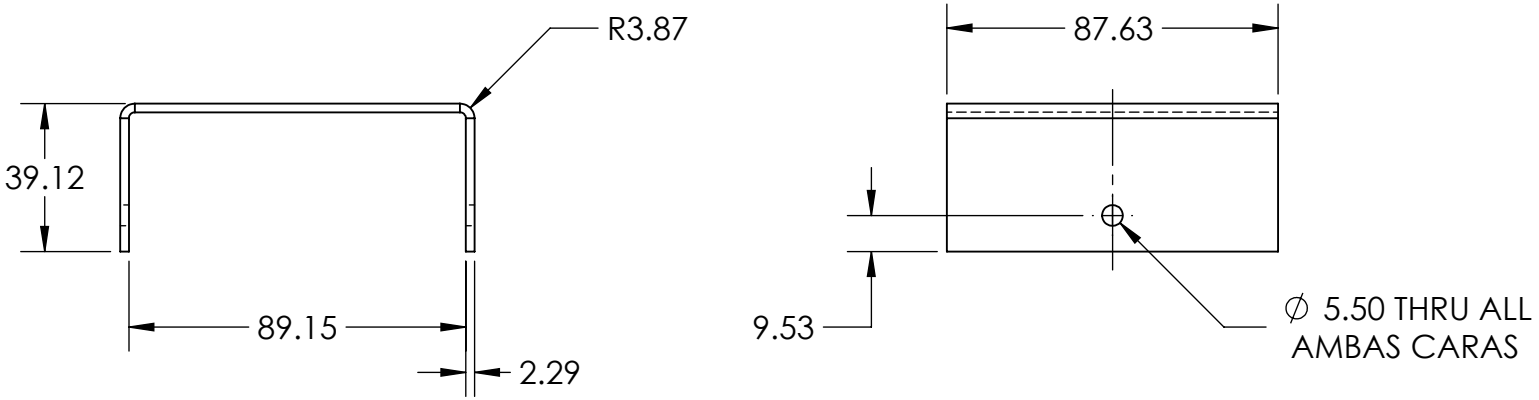

QUALITY

JOYSON
EQUIPO AUTOMOTRIZ AMERICANA S.A. DE C.V.
BOLSAS DE AIRE
NOMBRE: RM
FIRMA:
AUTHORIZE

TALLER

NOTES:
Pieza libre de filos y rebabas.

TOTAL OF PIECES	4 Pza.
ANG. PRO	

REV	DESCRIPTION	DATE	APPROVED

REVIEWS

UNLESS OTHERWISE SPECIFIED

TOLERANCES DIMENSIONS ISO 2768-1 mK-E ASME Y14.5M-1994

MM	INCHES	ANGLES
+.1 -.1	+.004 -.004	+1°-1°

MATERIAL: 6061-T6, AISS304

SURFACE TREATMENT: Pulido

HARDNESS: N.A.

PAG. 1 de 1

MEDIDA ESPECIAL

JOYSON SAFETY SYSTEMS

APPROVALS		DATE
DESIGNER	ABG	1/31/2022
REVIEW	RVM	1/31/2022

ALL TECHNICAL DATA DISCLOSED HERE IN IS THE PROPERTY OF JOYSON SAFETY SYSTEMS AND SHALL NOT BE USED BY ANY OTHER MANUFACTURER, PROCUREMENT OR DISCLOSURE WITHOUT WRITTEN PERMISSION OF THE OWNMER.

JOYSON TECHNICAL CENTER

MODEL NAME: PFM009-MVA SERIES No M2022-003

MACHINE NAME: QCF- VOVLO DAB

PART NUMBER: PFM009-MVA-101-006

SIZE	PART NAME	REV.
A	PINCH PROTECTOR	A

ESCALE 1:2 **DRAWING IN** MILLIMETERS

JSSAM-JTC-MF-FM-0002-001