General Dimension Tolerance			
0 ~ 4	± 0.1	16 ~ 63	± 0.3
4 ~ 16	± 0.2	63 ~	± 0.5

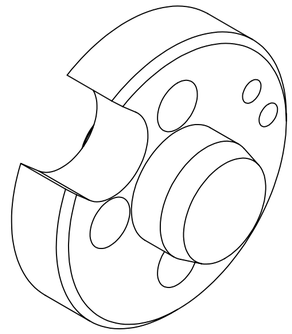

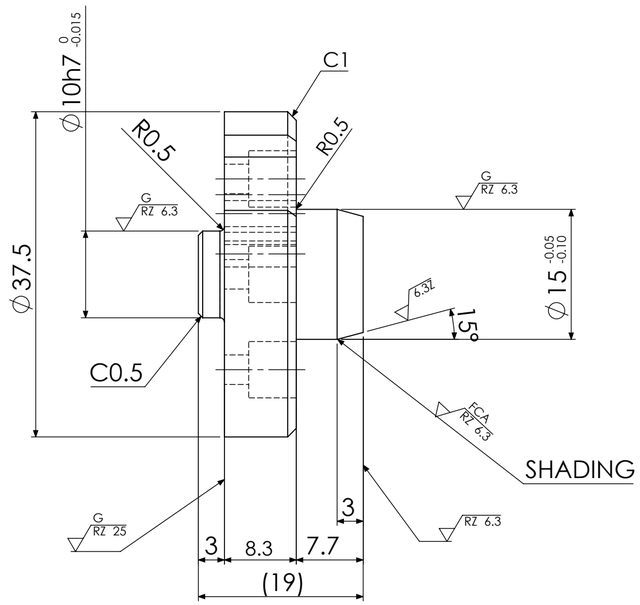

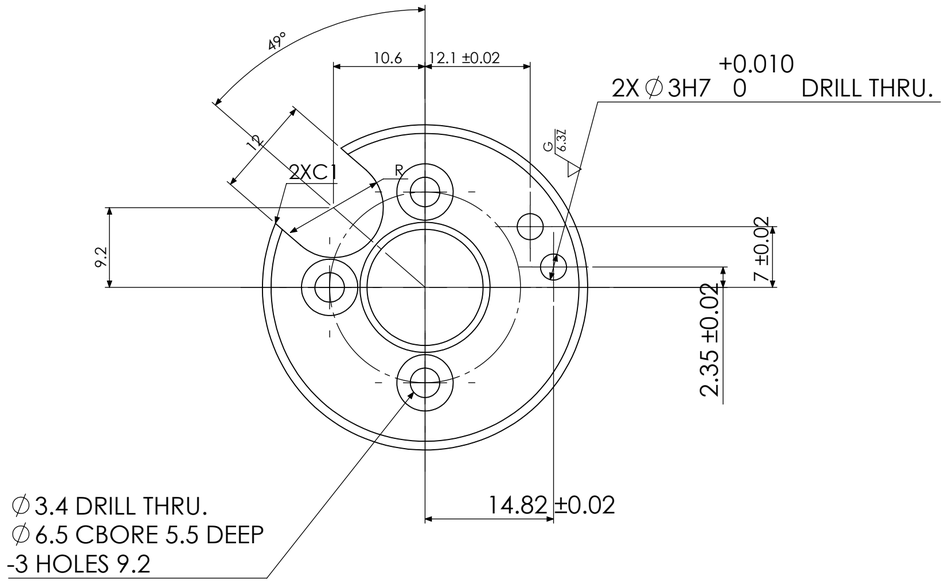

√ (RZ 100 RZ 6.3 G RZ 25 G RZ 6.3 FCA RZ 6.3)

NOTE: DIMENSION PREMISE AFTER PLATIN

SURFACE TREATMENT	HEAT TREATMENT	WEIGHT
MICr-20 ± 4μm	HRC: 57 ~ 64	
ALL PART	QT	

MATERIAL:	RESEMBLANCE PART No.	IMPO CODE	I/O CODE
SK3 ASTM A686 W1-10			

PART NAME: SHAFT

DENSO MEXICO	DWG NO.	A2	ASP CODE	SHEET 1 OF 1
APPROVED / CHECKED / CHECKED / DESIGNED / DRAWN	M-2931962-010			
	QTY.: 1	No.: 1		SCALE:2:1

CONFIDENTIAL