NAME	DATE	TIME (HRS)

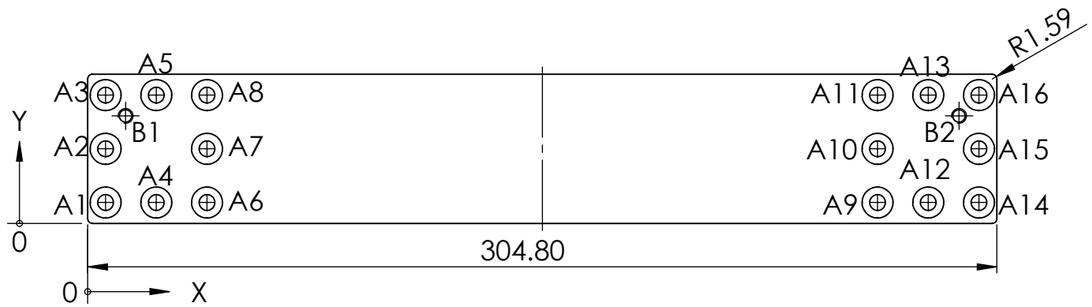

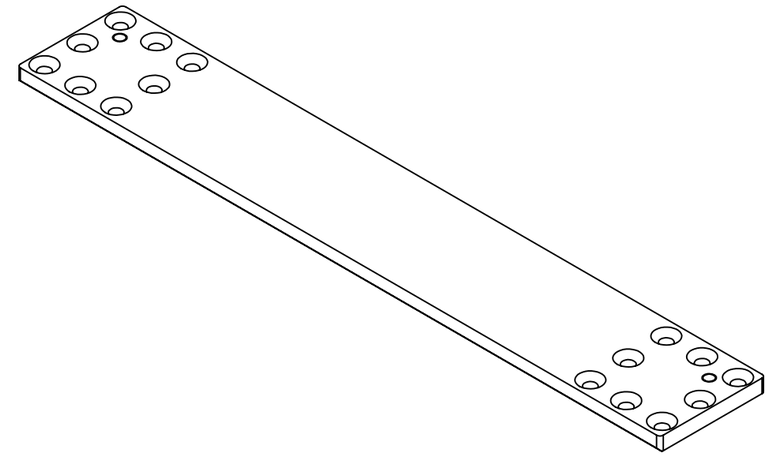

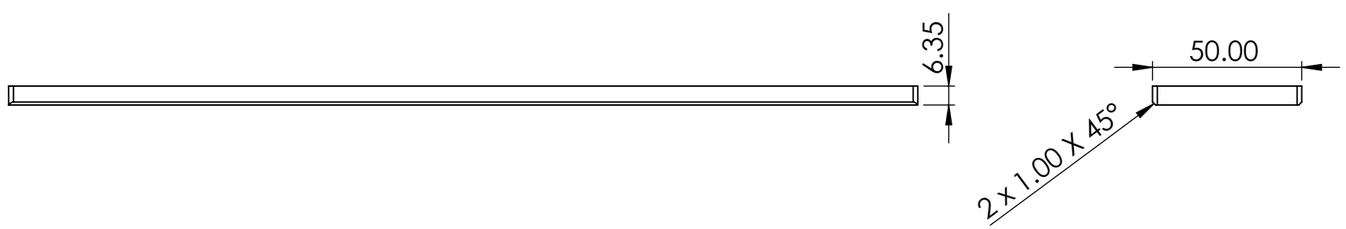

TAG	X LOC	Y LOC	SIZE
A1	6	7	E ∅ 5.30 THRU ALL ∅ 10.40 X 90°
A2	6	25	
A3	6	43	
A4	23	7	
A5	23	43	
A6	40	7	
A7	40	25	
A8	40	43	
A9	264.80	7	
A10	264.80	25	
A11	264.80	43	
A12	281.80	7	
A13	281.80	43	
A14	298.80	7	
A15	298.80	25	
A16	298.80	43	
B1	12.70	36.02	∅ 4.20 THRU ALL M5x0.8 - 6H THRU ALL
B2	292.10	36.02	

MDM001-TRN-500-007

PAG. 1 de 1

E MEDIDA ESPECIAL

ALL TECHNICAL DATA DISCLOSED HERE IS PROPERTY OF **TAKATA** SEAT BELTS INC. AND SHALL NOT BE USED BY ANY OTHER MANUFACTURER, PROCUREMENT OR DISCLOSURE WITHOUT WRITTEN PERMISSION OF THE OWNER

AUTHORIZE	TALLER	QUALITY

NOTES:

REV	DESCRIPTION	DATE	APPROVED

REVIEWS

TOTAL OF PIECES: 4 Pza.

ANG. PROF

UNLESS OTHERWISE SPECIFIED

TOLERANCES DIMENSIONS: ISO 2768-1 mK-E ASME Y14.5M-1994

MM	INCHES	ANGLES
+.1 -.1	+.004 -.004	+1° -1°

MATERIAL: 6061 Aluminium

SURFACE TREATMENT: Pulido

HARDNESS: N.A.

TAKATA

APPROVALS		DATE
DESIGNER	LGG	06-Jun-19
REVIEW	JEC	06-Jun-19

TAKATA MONTERREY TECHNICAL CENTER

MODEL NAME	MDM001-TRN	SERIES No	M2019-067
MACHINE NAME	Dobladora Manual		
PART NUMBER	MDM001-TRN-500-007		
SIZE B	PART NAME MDM001-TRN-500-007		REV. A
ESCALE: 1:2		DRAWING IN MILLIMETERS	

TKH-MTC-MF-FM-0016-004