General Dimension Tolerance			
0 ~ 4	± 0.1	16 ~ 63	± 0.3
4 ~ 16	± 0.2	63 ~	± 0.5

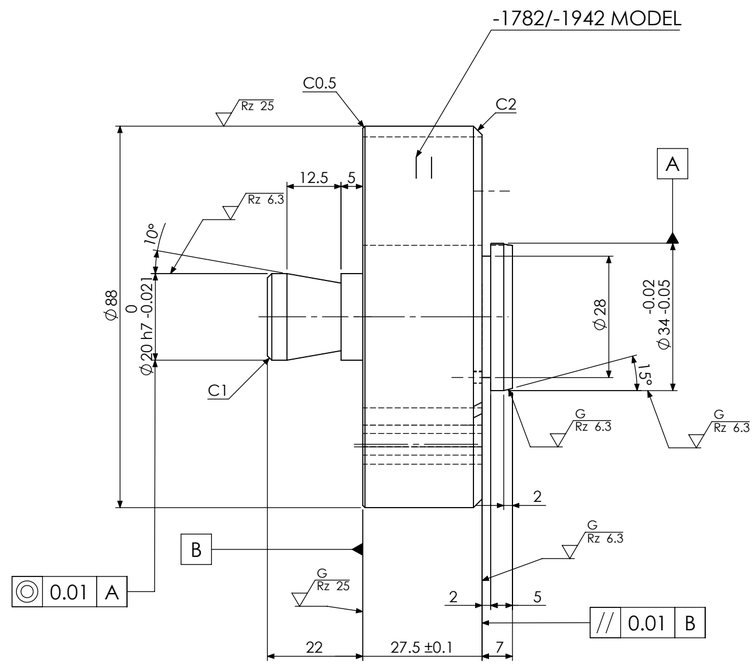

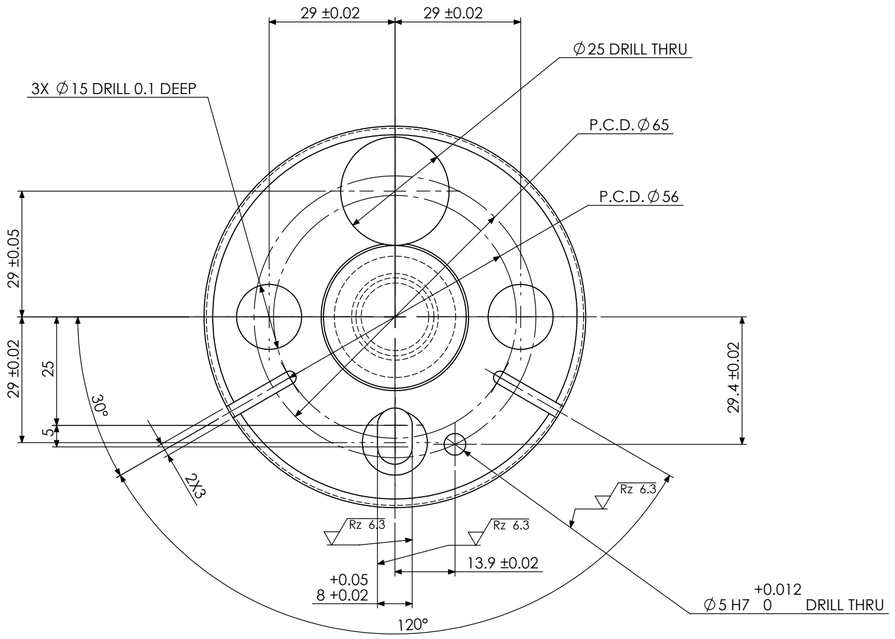

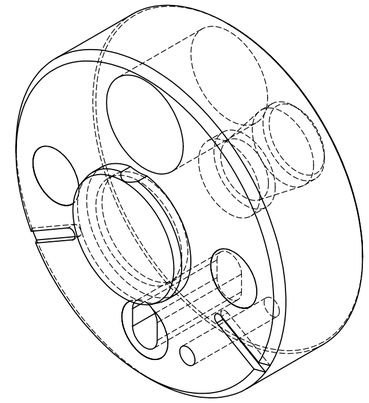

Rz 100 (Rz 6.3 G Rz 6.3 Rz 25 G Rz 25)

NOTE: DIMENSION PREMISE IS AFTER PLATING
NOTE: ALL EDGES MUST BE C0.3 UNLESS OTHERWISE SPECIFIED

SURFACE TREATMENT	HEAT TREATMENT	WEIGTH
MICr-20 ± 4μm	HRC 61-63	
ALL PART	QT	

MATERIAL:	RESEMBLANCE PART No.	IMPO CODE	I/O CODE
SKD11 (ASTM A681 D2)			

PART NAME: JIG (UR EX/2GR EX)

DENSO MEXICO

APPROVED	CHECKED	CHECKED	DESIGNED	DRAWN
				RT

DWG NO. M-2815387-360 | A2 | ASP CODE | SHEET 1 OF 1

QTY.: 1 | No.: 36 | SCALE:1:1

CONFIDENTIAL