NAME	DATE	TIME (HRS)

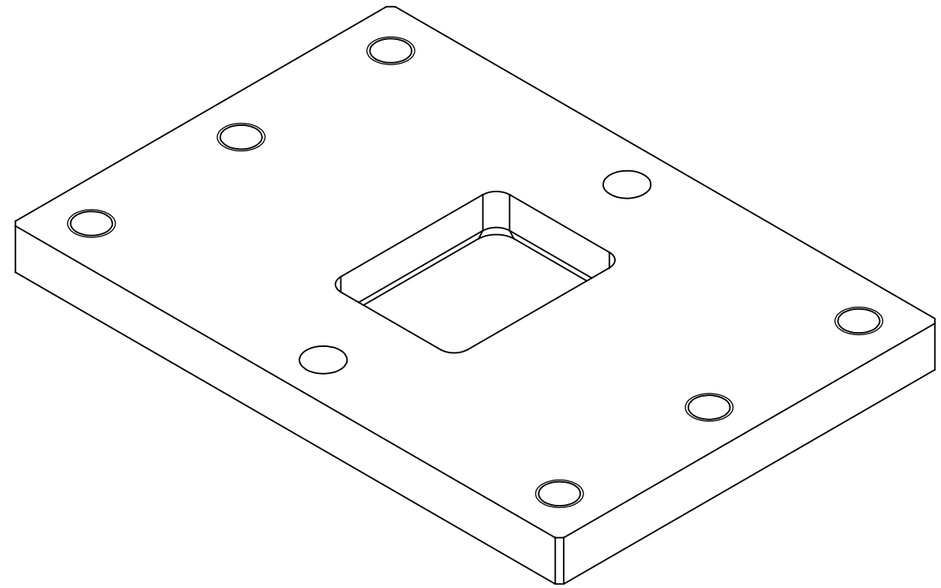

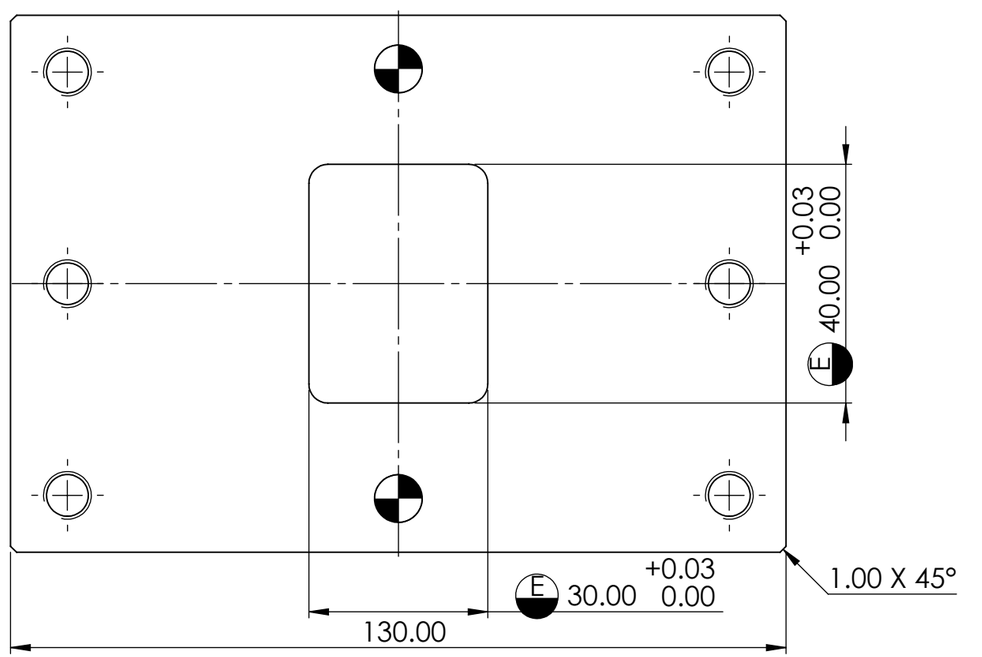

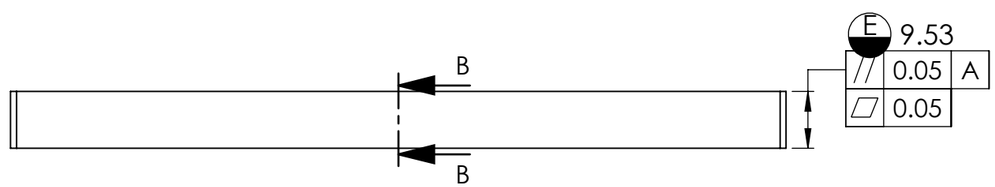

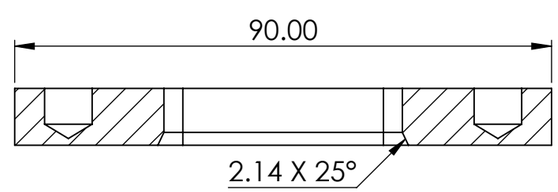

SECTION B-B
SCALE 1 : 1

FSR001-TRN-300-004

PAG. 1 de 2

E MEDIDA ESPECIAL

ALL TECHNICAL DATA DISCLOSED HERE IN IS THE PROPERTY OF JOYSON SAFETY SYSTEMS AND SHALL NOT BE USED BY ANY OTHER MANUFACTURER, PROCUREMENT OR DISCLOSURE WITHOUT WRITTEN PERMISSION OF THE OWNMER.

AUTHORIZE	TALLER	QUALITY

NOTES:
Pieza libre de filos y rebabas.

REV	DESCRIPTION	DATE	APPROVED

REVIEWS

TOTAL OF PIECES: 1 Pza.
ANG. PROF

UNLESS OTHERWISE SPECIFIED

TOLERANCES DIMENSIONS	ISO 2768-1 mK-E ASME Y14.5M-1994	
MM	INCHES	ANGLES
+.1 -.1	+.004 -.004	+1° -1°

MATERIAL: D2 Steel
SURFACE TREATMENT: Galvanizado
HARDNESS: HRC 50-55

JOYSON SAFETY SYSTEMS

APPROVALS		DATE
DESIGNER	LGG	28/01/2022
REVIEW	RVM	28/01/2022

JOYSON TECHNICAL CENTER

MODEL NAME | SERIES No
MACHINE NAME
PART NUMBER: FSR001-TRN-300-004
SIZE: **B** | PART NAME | REV.: **A**
ESCALE: 1:2 | DRAWING IN MILLIMETERS

NAME	DATE	TIME (HRS)

TAG	X LOC	Y LOC	SIZE
A1	-55.48	-35.48	∅ 7.00 THRU ALL M8x1.0 - 6H THRU ALL
A2	-55.48	0	
A3	-55.48	35.48	
A4	55.48	-35.48	
A5	55.48	0	
A6	55.48	35.48	
B1	0	-36	E ∅ 8.00 h7 0.00 / -0.02 ↧ 6.00
B2	0	36	

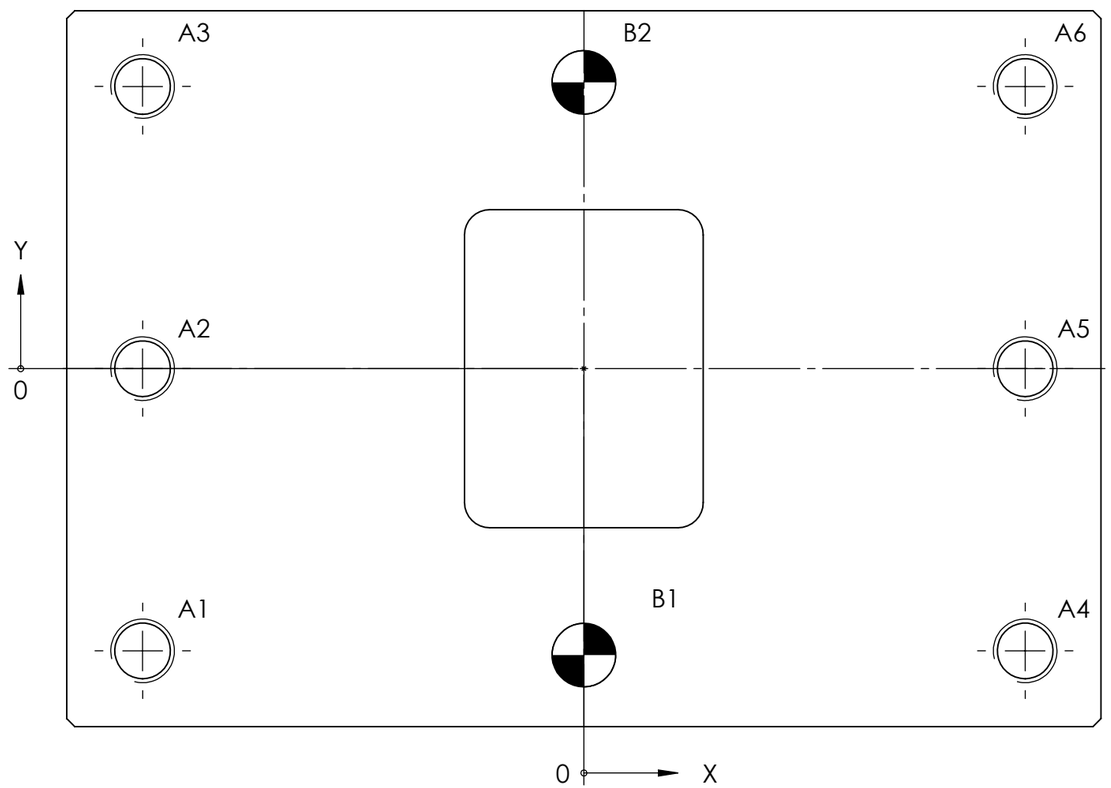

FSR001-TRN-300-004

PAG. 2 de 2

E MEDIDA ESPECIAL

ALL TECHNICAL DATA DISCLOSED HERE IN IS THE PROPERTY OF JOYSON SAFETY SYSTEMS AND SHALL NOT BE USED BY ANY OTHER MANUFACTURER, PROCUREMENT OR DISCLOSURE WITHOUT WRITTEN PERMISSION OF THE OWNMER.

AUTHORIZE	TALLER	QUALITY

NOTES:
Pieza libre de filos y rebabas.

TOTAL OF PIECES: 1 Pza.

ANG. PROF

REV	DESCRIPTION	DATE	APPROVED

REVIEWS

UNLESS OTHERWISE SPECIFIED

TOLERANCES DIMENSIONS	ISO 2768-1 mK-E ASME Y14.5M-1994	
MM	INCHES	ANGLES
+.1 -.1	+.004 -.004	+1° -1°

MATERIAL: D2 Steel

SURFACE TREATMENT: Galvanizado

HARDNESS: HRC 50-55

JOYSON SAFETY SYSTEMS

APPROVALS		DATE
DESIGNER	LGG	28/01/2022
REVIEW	RVM	28/01/2022

JOYSON TECHNICAL CENTER

MODEL NAME | SERIES No

MACHINE NAME

PART NUMBER: FSR001-TRN-300-004

SIZE: **B** | PART NAME | REV.: **A**

ESCALE: 1:1 | DRAWING IN MILLIMETERS