NOTES :
1. ALL RADII TO BE R3 EXCEPT AS NOTED.
2. USE THIS DWG FOR CASTING CONFIGURATION

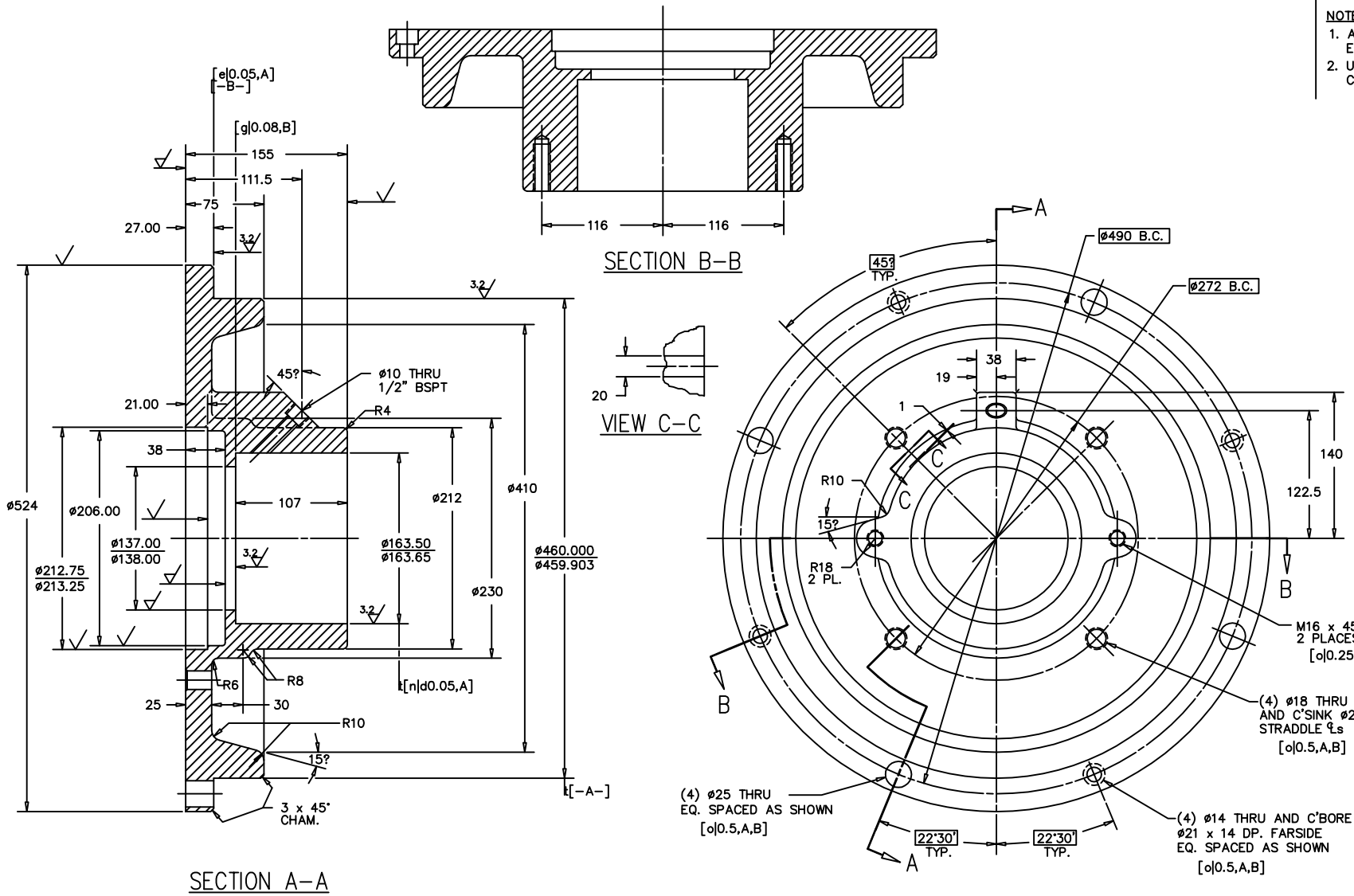

WEIGHT: 73 kgs. / 160 lbs.

PATTERN No.	CASTING No.	PART No.	MATERIAL CODE No.	REMARKS
100906	102581	102580	008	
100906	100907	100908	002	

THIS DRAWING CONTAINS CONFIDENTIAL INFORMATION AND IS THE EXCLUSIVE PROPERTY OF BGA INTERNATIONAL. IT MAY NOT BE COPIED OR REPRODUCED, IN ANY FORM WITHOUT THE EXPRESS WRITTEN AUTHORITY OF BGA INTERNATIONAL.

BREAK ALL SHARP CORNERS AND EDGES

UNLESS OTHERWISE SPECIFIED DIMENSIONS ARE IN MILLIMETERS

MACHINED SURFACES 6.3

TOLERANCES
X ±1.5
.X ±0.8
.XX ±0.25
ANGULAR ±0°-30'

BGA INTERNATIONAL
A Baker Hughes company
440 WEST 800 SOUTH
SALT LAKE CITY
UTAH, USA

ASH PUMP®

STUFFING BOX
200 X 200 X 435 PUMP
No.5 MECHANICAL END

DRAWN BY H.WITTS.	DATE 6-1-84	
CHECKED R.K.	DATE 8-3-84	
APPROVED L.T.G.	DATE 1-3-85	

SCALE 1:2 | PART NO. | DWG NO. MK00222 | REVISION E

DRAWING NO. MK00222

REVISIONS NO.	BY	DATE	CHK'D	LCL ECN	INT'L ECN	DESCRIPTION
E	KM	10-91	RK	06383	254	REDRAWN ON CAD W/O DESIGN CHANGE

REFERENCE DWG. NO.	DESCRIPTION

BGA P/N. | ALT P/N.
CAD dasnd549 | CHG 911007.1338 | 4.53