NAME	DATE	TIME (HRS)

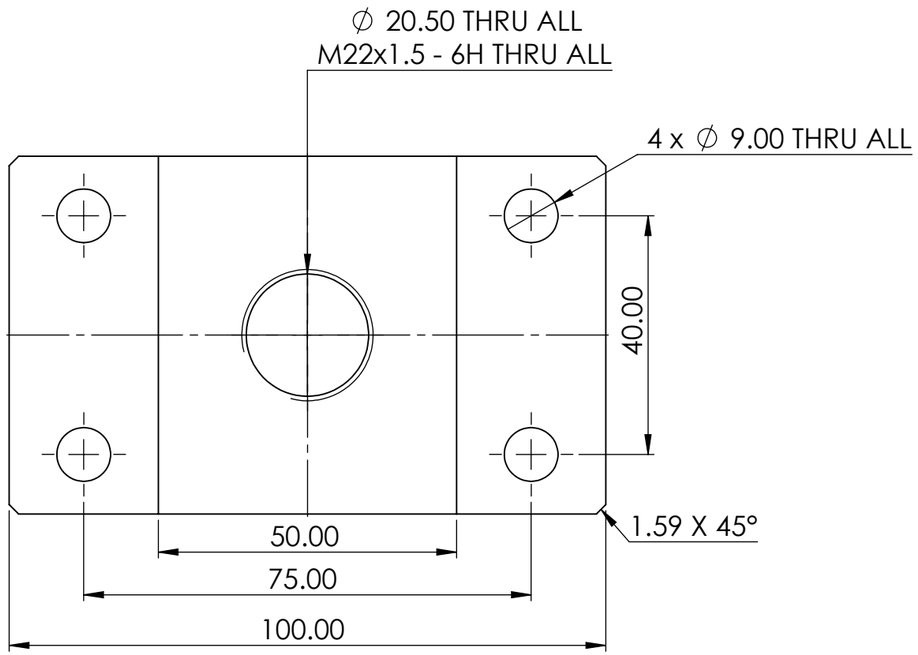

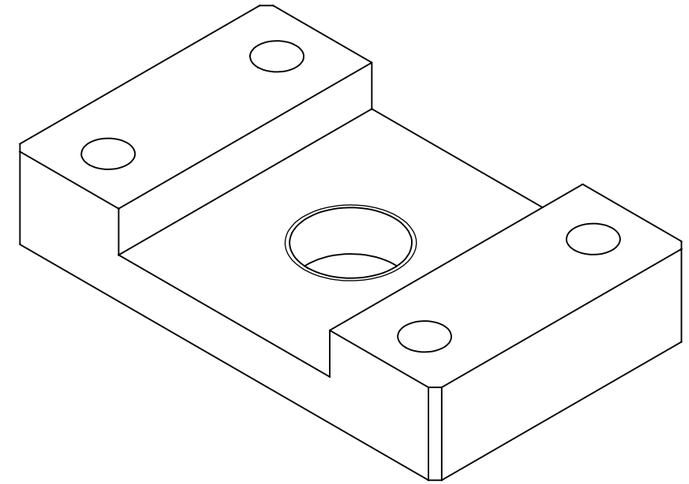

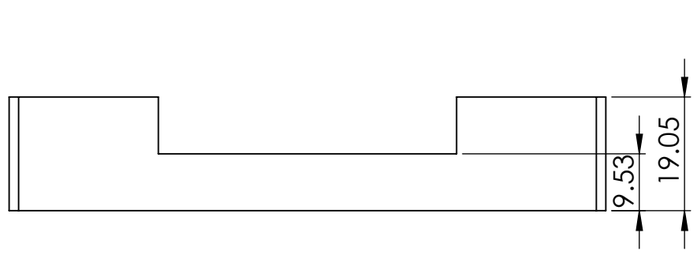

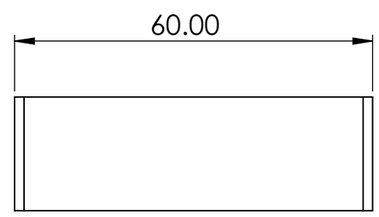

FM004-TRN-100-011

PAG. 1 de 1

MEDIDA ESPECIAL

ALL TECHNICAL DATA DISCLOSED HERE IN IS THE PROPERTY OF JOYSON SAFETY SYSTEMS AND SHALL NOT BE USED BY ANY OTHER MANUFACTURER, PROCUREMENT OR DISCLOSURE WITHOUT WRITTEN PERMISSION OF THE OWNMER.

AUTHORIZE	TALLER	QUALITY

NOTES:

Pieza libre de filos y rebabas.

REV	DESCRIPTION	DATE	APPROVED

REVIEWS

TOTAL OF PIECES: 1 Pza.

ANG. PROF

UNLESS OTHERWISE SPECIFIED

TOLERANCES DIMENSIONS	ISO 2768-1 mK-E ASME Y14.5M-1994	
MM	INCHES	ANGLES
+.1 -.1	+.004 -.004	+1° -1°

MATERIAL: 6061 Aluminium

SURFACE TREATMENT: Clear Anodize

HARDNESS: N.A.

JOYSON SAFETY SYSTEMS

APPROVALS		DATE
DESIGNER	NMM	7/4/2022
REVIEW	RVM	7/4/2022

JOYSON TECHNICAL CENTER

MODEL NAME	FM004-TRN	SERIES No	M2022-108
MACHINE NAME	FOLDING MACHINE		
PART NUMBER	FM004-TRN-100-011		
SIZE **B**	PART NAME		REV. **A**
ESCALE: 1:2		DRAWING IN MILLIMETERS	

JSSAM-JTC-MF-FM-0002