NAME	DATE	TIME (HRS)

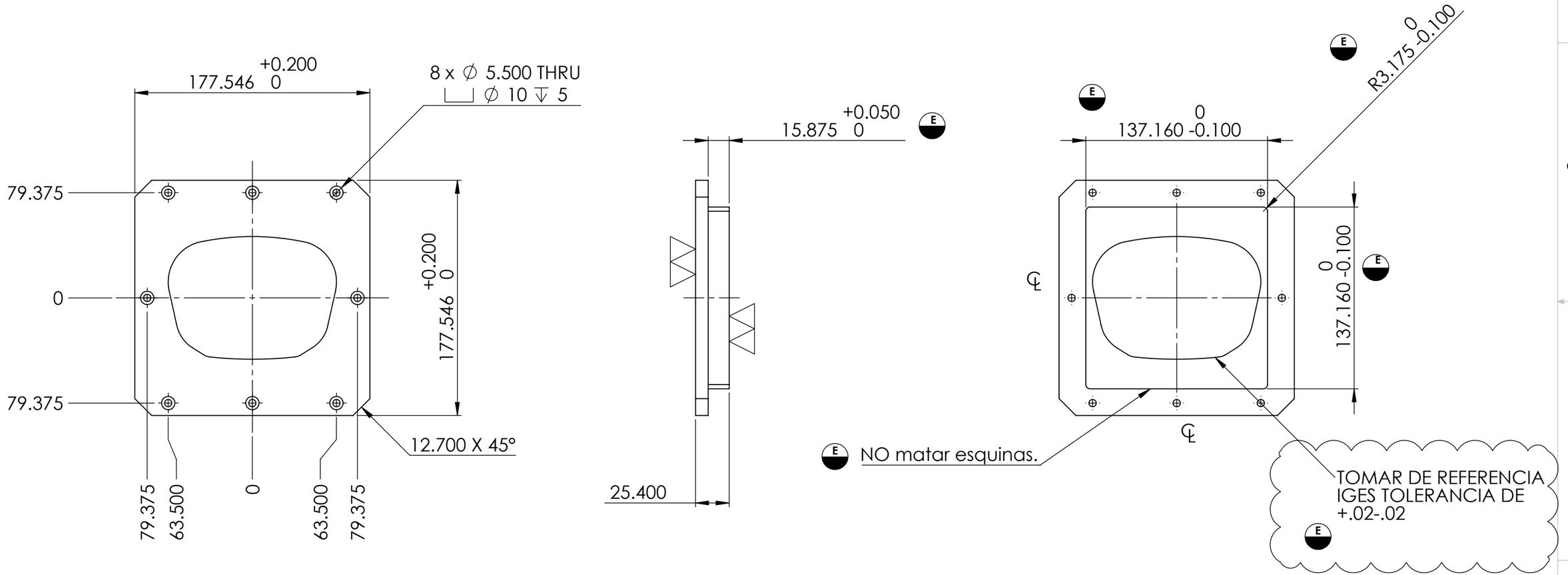

TOQ008-MVA-400-001

PAG. 1 de 1

E MEDIDA ESPECIAL

ALL TECHNICAL DATA DISCLOSED HERE IN IS THE PROPERTY OF JOYSON SAFETY SYSTEMS AND SHALL NOT BE USED BY ANY OTHER MANUFACTURER, PROCUREMENT OR DISCLOSURE WITHOUT WRITTEN PERMISSION OF THE OWNMER.

JOYSON
EQUIPO AUTOMOTRIZ AMERICANA S.A. DE C.V.
BOLSAS DE AIRE
NOMBRE: RM
FIRMA:

AUTHORIZE | TALLER | QUALITY

NOTES:
Pieza libre de filos y rebabas.

REV	DESCRIPTION	DATE	APPROVED
B	Cambio diametro.		

REVIEWS

TOTAL OF PIECES: 1 Pza.
ANG. PROF

UNLESS OTHERWISE SPECIFIED
TOLERANCES DIMENSIONS: ISO 2768-1 mK-E ASME Y14.5M-1994

MM	INCHES	ANGLES
+.1 -.1	+.004 -.004	+1° -1°

MATERIAL: BRONCE ALUMINIO
SURFACE TREATMENT: Pulido
HARDNESS: N.A.

JOYSON SAFETY SYSTEMS

APPROVALS		DATE
DESIGNER	ABG	1/30/2022
REVIEW	RVM	1/30/2022

JOYSON TECHNICAL CENTER

MODEL NAME	TOQ008-MVA	SERIES No	M2022-004
MACHINE NAME	QCF Tooling VOLVO		
PART NUMBER	TOQ008-MVA-400-001		
SIZE B	PART NAME TOQ008-MVA-400-001-B		REV. A
ESCALE: 1:3		DRAWING IN MILLIMETERS	

JSSAM-JTC-MF-FM-0002