NAME	DATE	TIME (HRS)

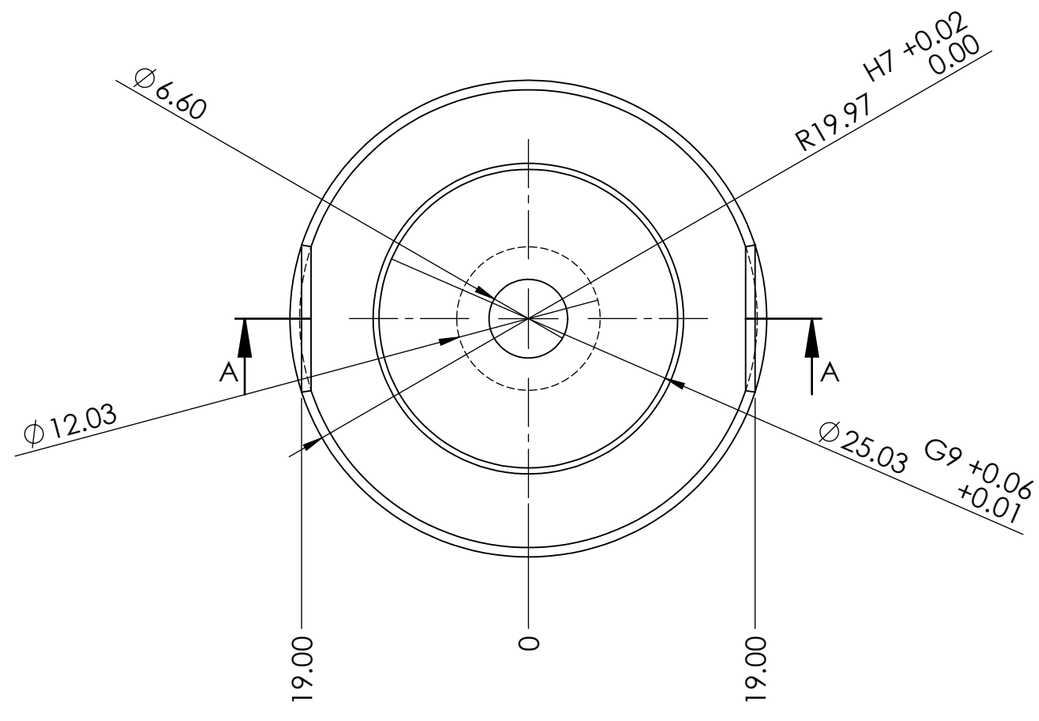

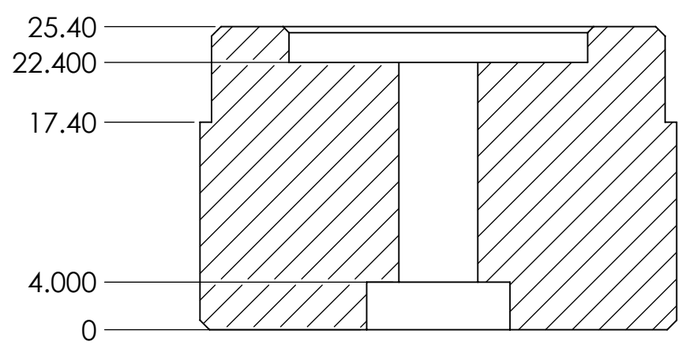

SECTION A-A

JAPM003-AC-103-01

PAG. 1 de 1

E MEDIDA ESPECIAL

ALL TECHNICAL DATA DISCLOSED HERE IN IS THE PROPERTY OF JOYSON SAFETY SYSTEMS AND SHALL NOT BE USED BY ANY OTHER MANUFACTURER, PROCUREMENT OR DISCLOSURE WITHOUT WRITTEN PERMISSION OF THE OWNMER.

AUTHORIZE	TALLER	QUALITY

NOTES:

Pieza libre de filos y rebabas.

REV	DESCRIPTION	DATE	APPROVED

REVIEWS

TOTAL OF PIECES: 8 Pza.

ANG. PROF

UNLESS OTHERWISE SPECIFIED

TOLERANCES DIMENSIONS: ISO 2768-1 mK-E ASME Y14.5M-1994

MM	INCHES	ANGLES
+.1 -.1	+.004 -.004	+1° -1°

MATERIAL: 4140T

SURFACE TREATMENT: Galvanizado

HARDNESS: 58-60 HRC

JOYSON SAFETY SYSTEMS

APPROVALS		DATE
DESIGNER	GFM	06/07/2022
REVIEW	EG	06/07/2022

JOYSON TECHNICAL CENTER

MODEL NAME | SERIES No

MACHINE NAME

PART NUMBER: JAPM003-AC-103-01

SIZE	PART NAME	REV.
B	PORTA LOCALIZADOR	**B**

ESCALE: 2:1 | DRAWING IN MILLIMETERS

TKH-MTC-MF-FM-0016-005