REVISION HISTORY					
REV	DESCRIPTION	DATE	BY	CHKD	APPR
01	CREATION DATE	3/19/2019	E. FLORES	E. FLORES	

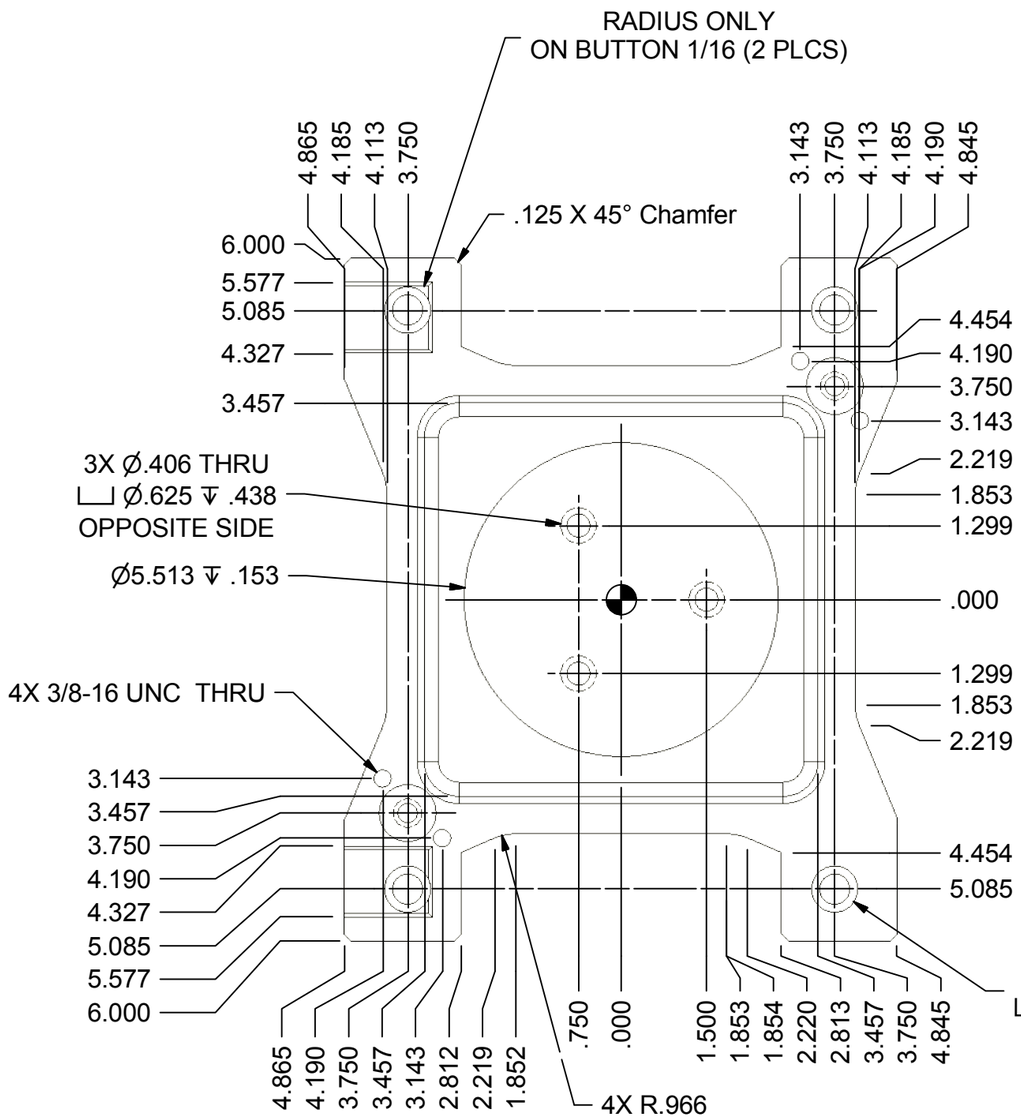

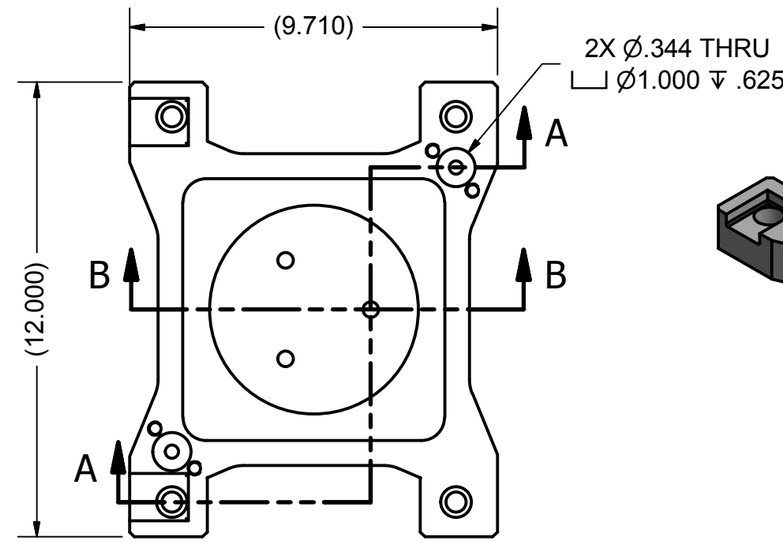

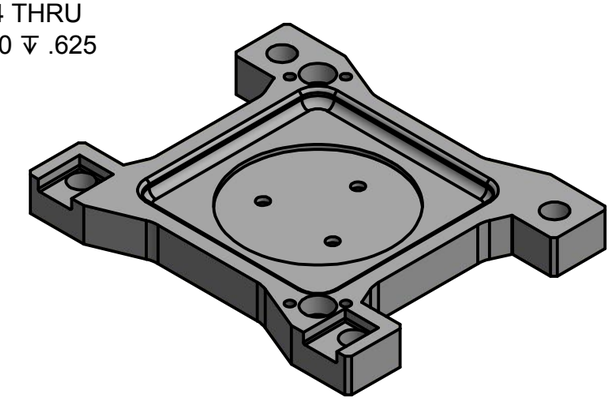

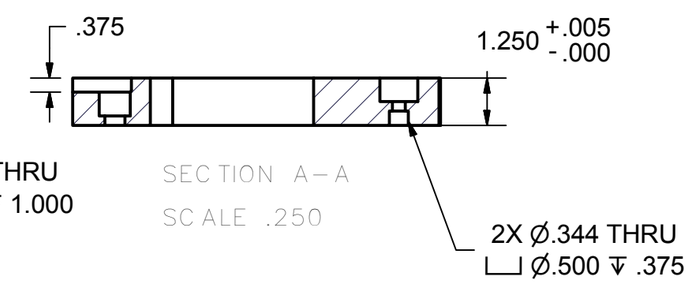

SECTION A–A
SCALE .250

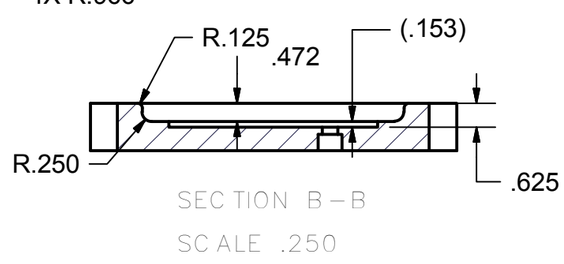

SECTION B–B
SCALE .250

NAME	DESCRIPTION
HP	HIGH POLISH SURFACE
GR	GRINDED SURFACE

1 REQ'D

UNLESS OTHERWISE SPECIFIED, TOLERANCES ARE AS FOLLOWS:

.X	± .030
.XX	± .015
.XXX	± .005
.XXXX	± .0005
FRACTIONS	± 1/16"
ANGLE	± 1°

© COPYRIGHT 2012

Ice Industries

NOTICE

ALL INFORMATION, DATA, AND CALCULATIONS CONTAINED IN THIS DRAWING IS THE EXCLUSIVE PROPERTY OF *Ice Industries, Inc.*, ITS SUBSIDIARIES AND AFFILIATES. THIS INFORMATION IS CONSIDERED PROPRIETARY. IT IS NOT TO BE REPRODUCED, MODIFIED, REENGINEERED OR DISCLOSED TO OTHERS. ANY PRODUCTS DEPICTED HEREIN, ARE NOT TO BE FABRICATED, IN WHOLE OR IN PART, WITHOUT THE PRIOR WRITTEN CONSENT OF *Ice Industries, Inc.*

DRAWN	E. FLORES	3/19/2019
CHECKED BY:	E. FLORES	3/19/2019
ENG. APPROVAL:		
MFG. APPROVAL:		

MATERIAL:
TYPE: D2
THK: 1.250"

TITLE
EMERSON 005-1293-00
FORM PAD

SIZE	HARDNESS	DWG NO	REV
B	54-56 RC	005-1293-00FP227-01.idw	01

FINISH:
SHEET 1 OF 1