| SYM | REVISION RECORD | ISSUE NO. | DATE | DR |
|---|---|---|---|---|
| | | | | |
| | | | | |
| | | | | |

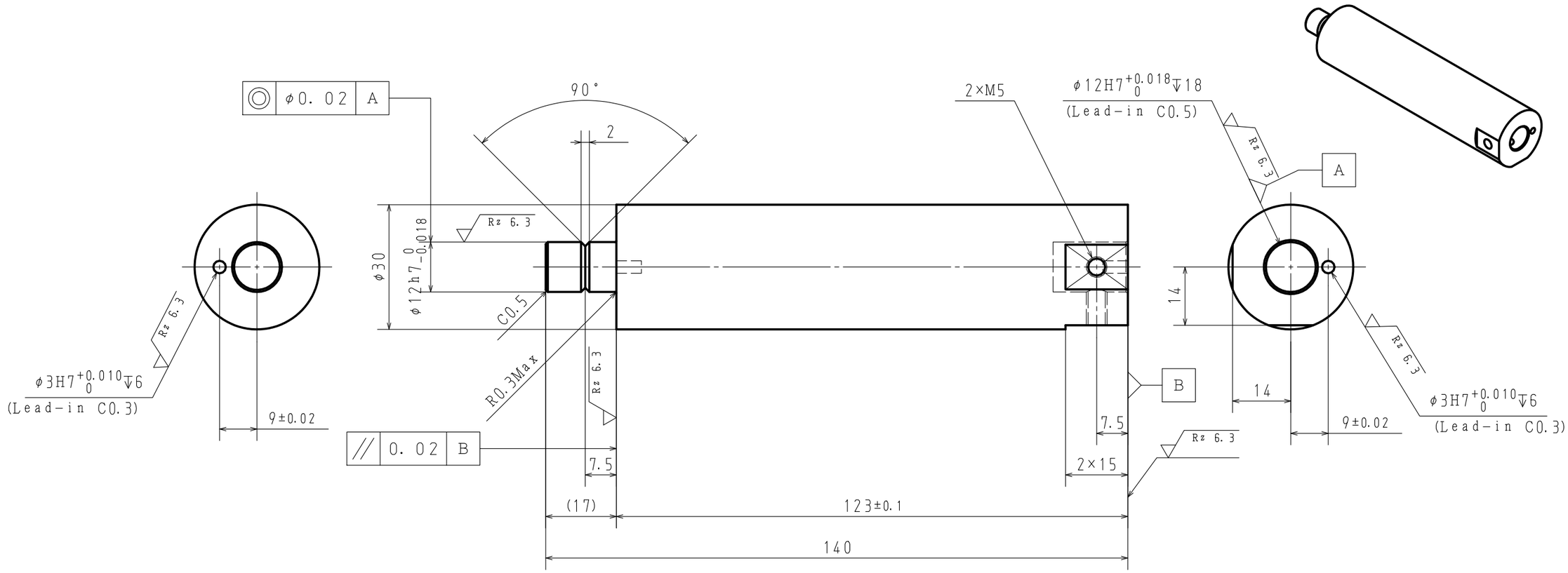


注) 指示なき角部はC0.3面取りすること

Note) Unless otherwise specified, chamfer on all corners shall be C0.3.

| SURFACE TREATMENT 表面処理 | HEAT TREATMENT 熱処理 | MASS | UNIT |
|---|---|---|---|
| ELp-Fe/Ni-P5 | | | |
| MATERIAL 材質 | RESEMBLANCE PART NO. | IMPO CODE | I/O CODE |
| S45C | | | |

PART NAME 品名: Base

3rd Angle

DENSO CORPORATION

| APPROVED | CHECKED | CHECKED | DESIGNED | DRAWN |
|---|---|---|---|---|
| | | | Katou 2020-09-11 | Katou 2020-09-11 |

PART NO. 品番: M-R020601-130 | DR SIZE: 3 | ASP CODE: P | SHEET: 1/1

REMARK

SCALE: 1/1

THIS DRAWING AND ITS RELATED TECHNICAL INFORMATION ARE THE PROPERTY OF DENSO CORPORATION AND/OR THE DENSO GROUP COMPANY HEREIN. THEY SHALL NOT BE COPIED, USED NOR TRANSFERRED, IN WHOLE OR IN PART, TO ANY THIRD PARTY WITHOUT PRIOR PERMISSION OF DENSO CORPORATION.