NAME	DATE	TIME (HRS)

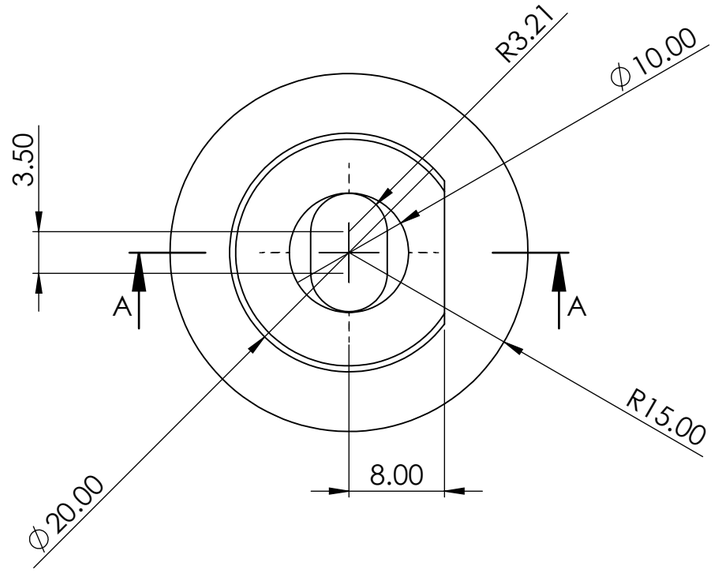

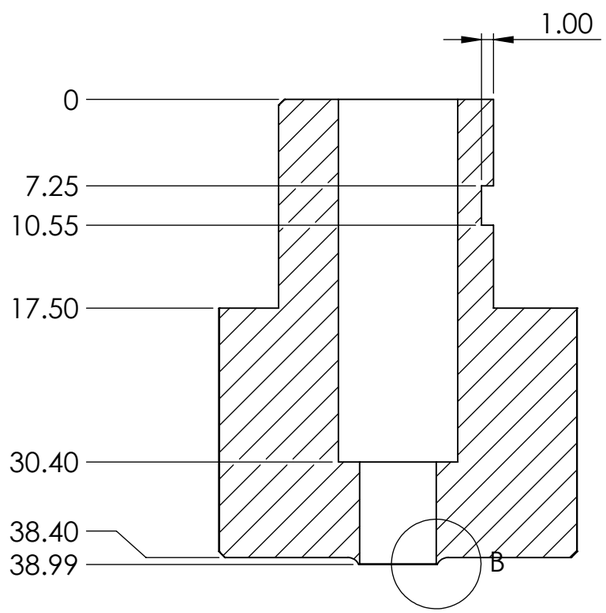

SECTION A-A

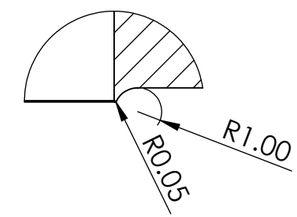

DETAIL B
SCALE 4 : 1

RP001-TRN-202-005

PAG. 1 de 1

MEDIDA ESPECIAL

ALL TECHNICAL DATA DISCLOSED HERE IN IS THE PROPERTY OF JOYSON SAFETY SYSTEMS AND SHALL NOT BE USED BY ANY OTHER MANUFACTURER, PROCUREMENT OR DISCLOSURE WITHOUT WRITTEN PERMISSION OF THE OWNMER.

AUTHORIZE	TALLER	QUALITY

NOTES:
Pieza libre de filos y rebabas.

TOTAL OF PIECES: 1 Pza.
ANG. PROF

REV	DESCRIPTION	DATE	APPROVED

REVIEWS

UNLESS OTHERWISE SPECIFIED
TOLERANCES DIMENSIONS: ISO 2768-1 mK-E ASME Y14.5M-1994

MM	INCHES	ANGLES
+.1 -.1	+.004 -.004	+1° -1°

MATERIAL: A2
SURFACE TREATMENT: Pavonado
HARDNESS: 58-60 HRC

JOYSON SAFETY SYSTEMS

APPROVALS		DATE
DESIGNER	JEC	30/06/2022
REVIEW	JEC	30/06/2022

JOYSON TECHNICAL CENTER

MODEL NAME | SERIES No
MACHINE NAME
PART NUMBER: RP001-TRN-202-005
SIZE: B | PART NAME: Dado Inferior | REV.
ESCALE: 2:1 | DRAWING IN MILLIMETERS

TKH-MTC-MF-FM-0016-005