NAME	DATE	TIME (HRS)

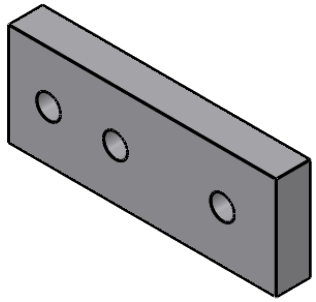

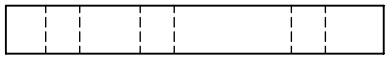

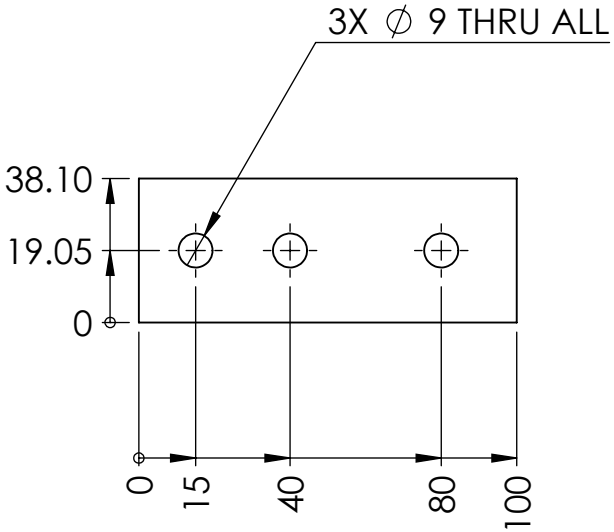

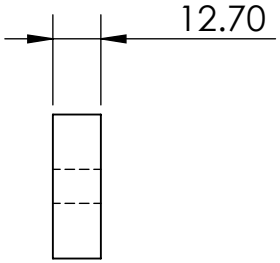

QUALITY

AUTHORIZE

TALLER

NOTES: DEJAR PIEZA LIBRE DE REBABA Y MATAR FILOS.

SHEET 1 OF 1

TOTAL OF PIECES	2 Pzas.
ANG. PRO	

REV	DESCRIPTION	DATE	APPROVED

REVIEWS

UNLESS OTHERWISE SPECIFIED

TOLERANCES DIMENSIONS ISO 2768-1 mK-E ASME Y14.5M-1994

MM	INCHES	ANGLES
+.1 -.1	+.004 -.004	+1°-1°

MATERIAL: 6061 Aluminio

SURFACE TREATMENT N.A.

HARDNESS N.A.

ME001-P1-022

E **MEDIDA ESPECIAL**

JOYSON SAFETY SYSTEMS

APPROVALS		DATE
DESIGNER	MASL	21/ENE/2022
REVIEW	ACC	21/ENE/2022

ALL TECHNICAL DATA DISCLOSED HERE IN IS THE PROPERTY OF JOYSON SAFETY SYSTEMS AND SHALL NOT BE USED BY ANY OTHER MANUFACTURER, PROCUREMENT OR DISCLOSURE WITHOUT WRITTEN PERMISSION OF THE OWNMER.

JOYSON TECHNICAL CENTER

MODEL NAME: ME001-P1 SERIES No: M2021-172

MACHINE NAME: ESTACION DE CALIBRACION

PART NUMBER: ME001-P1-022

SIZE	PART NAME	REV.
A	PART 022	A

ESCALE 1:2 **DRAWING IN** MM

JSSAM-JTC-MF-FM-0002-001