General Dimension Tolerance		
0 ~ 4	± 0.1	16 ~ 63	± 0.3
4 ~ 16	± 0.2	63 ~	± 0.5

REVISIONES			
REV.	DESCRIPCIÓN	FECHA	APROBADO
1	ADJUST DIMENSION	7/1/2022	DS

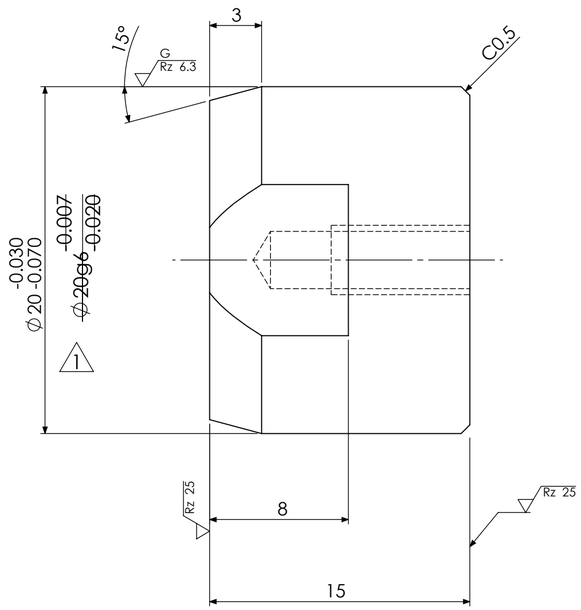

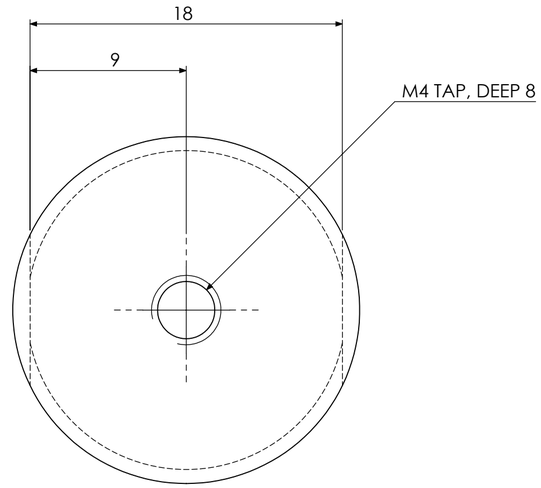

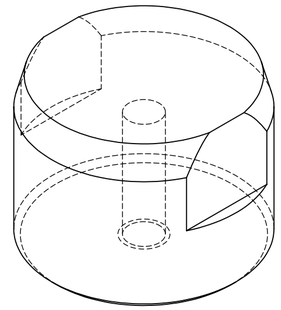

Rz 100 (Rz 25)

NOTE: UNLESS OTHERWISE SPECIFIED CHAMFER ALL CORNERS TO C0.5

SURFACE TREATMENT	HEAT TREATMENT	WEIGTH	
MATERIAL:	RESEMBLANCE PART No.	IMPO CODE	I/O CODE
SUS303 (AISI 303)			
PART NAME	SHAFT		
DENSO MEXICO	DWG NO. M-2321184-041	A2	ASP CODE / SHEET 1 OF 1
APPROVED / CHECKED / CHECKED / DESIGNED / DRAWN	QTY.: 4	No.: 4	SCALE:S:1

CONFIDENTIAL