NAME	DATE	TIME (HRS)

ITEM NO.	QTY.	DESCRIPTION	LENGTH
1	4	40-4040lite	580
2	4	40-4040lite	2320
3	2	40-4040lite	1800
4	4	40-4040lite	2320
5	8	40-4040lite	460
6	4	40-4040lite	660

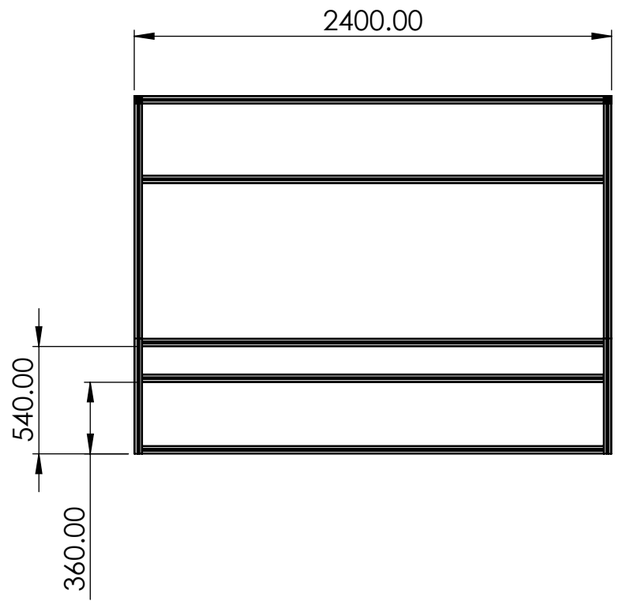

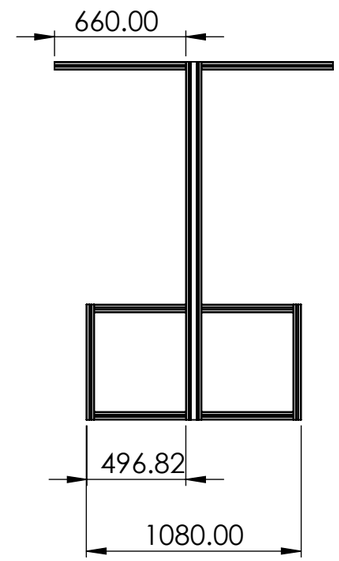

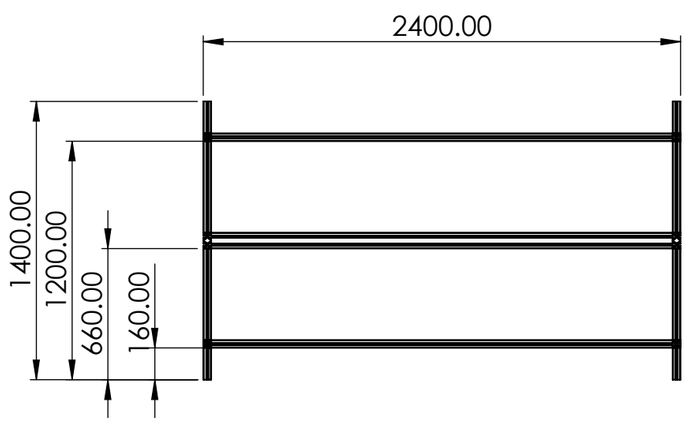

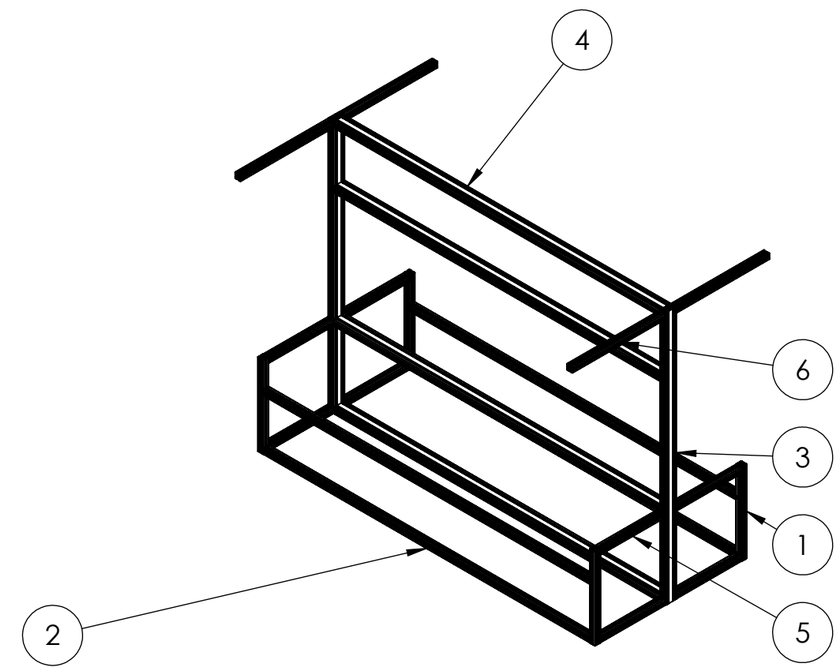

MTS001-TRN-000-005

PAG. 1 de 1

E MEDIDA ESPECIAL

ALL TECHNICAL DATA DISCLOSED HERE IN IS THE PROPERTY OF JOYSON SAFETY SYSTEMS AND SHALL NOT BE USED BY ANY OTHER MANUFACTURER, PROCUREMENT OR DISCLOSURE WITHOUT WRITTEN PERMISSION OF THE OWNMER.

AUTHORIZE	TALLER	QUALITY

NOTES:

Pieza libre de filos y rebabas.

REV	DESCRIPTION	DATE	APPROVED

REVIEWS

TOTAL OF PIECES: 1 Pza.

ANG. PROF

UNLESS OTHERWISE SPECIFIED

TOLERANCES DIMENSIONS: ISO 2768-1 mK-E ASME Y14.5M-1994

MM	INCHES	ANGLES
+.1 -.1	+.004 -.004	+1° -1°

MATERIAL: 40-4040 PERFIL ALUM.

SURFACE TREATMENT: N.A.

HARDNESS: N.A.

JOYSON SAFETY SYSTEMS

APPROVALS		DATE
DESIGNER	GFM	12/07/2022
REVIEW	EG	12/07/2022

JOYSON TECHNICAL CENTER

MODEL NAME | SERIES No

MACHINE NAME

PART NUMBER: MTS001-TRN-000-005

SIZE: B | PART NAME: FRAME INFERIOR | REV.

ESCALE: 1:50 | DRAWING IN MILLIMETERS

TKH-MTC-MF-FM-0016-005