General Dimension Tolerance			
0 ~ 4	±0.1	16 ~ 63	±0.3
4 ~ 16	±0.2	63 ~	±0.5

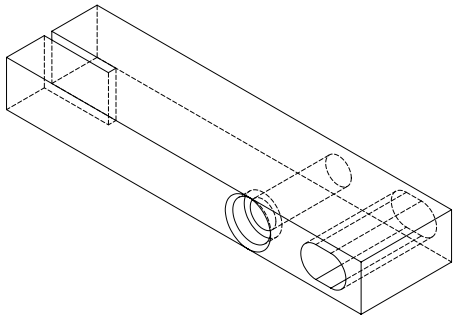

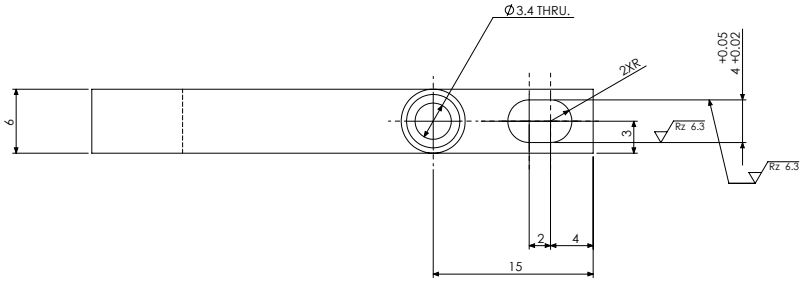

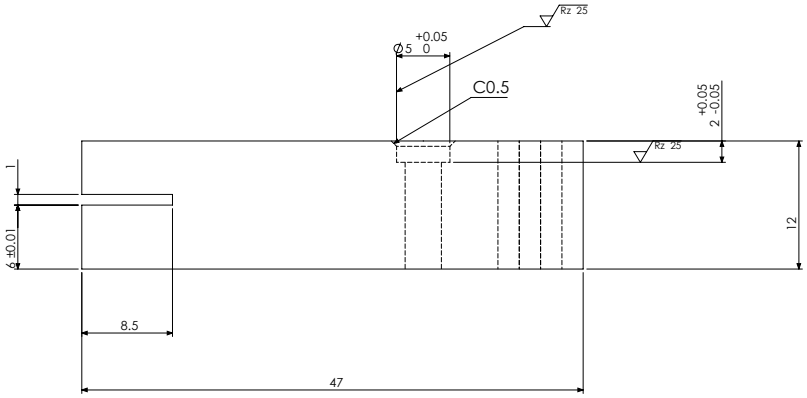

Rz 100 (Rz 25 , Rz 6.3)

NOTE: ALL EDGES MUST BE C0.5 UNLESS OTHERWISE SPECIFIED

SURFACE TREATMENT	HEAT TREATMENT	WEIGHT	
MATERIAL:	RESEMBLANCE PART No.	IMPO CODE	I/O CODE
YH75 (ASIM B209M 7075)			
PART NAME: DOG			
DENSO MEXICO	DWG NO.: M-1109438-040	A2	ASP CODE / SHEET 1 OF 1
APPROVED / CHECKED / CHECKED / DESIGNED / DRAWN	QTY.:1	No.: 4	SCALE:S:1

CONFIDENTIAL