NAME	DATE	TIME (HRS)

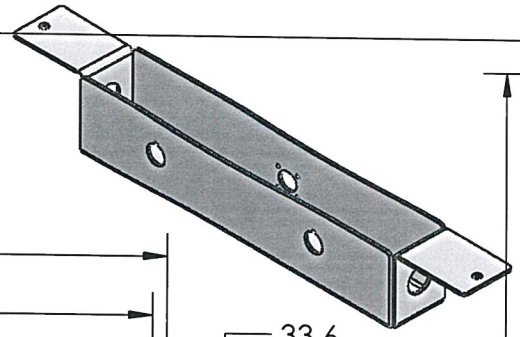

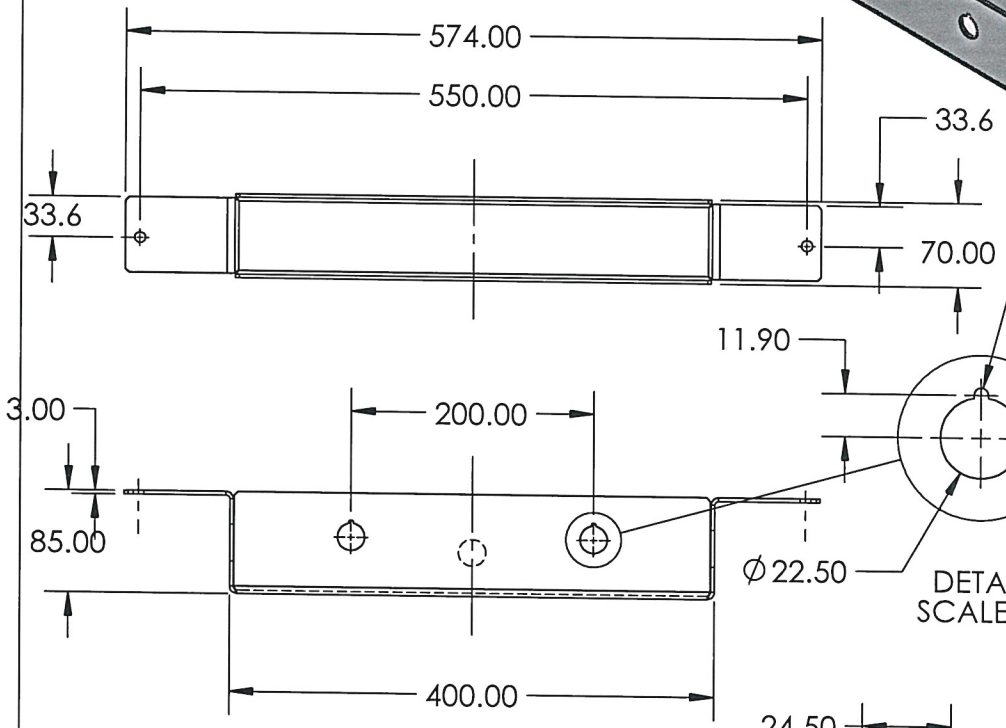

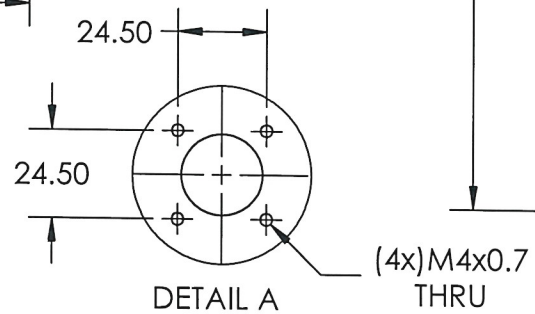

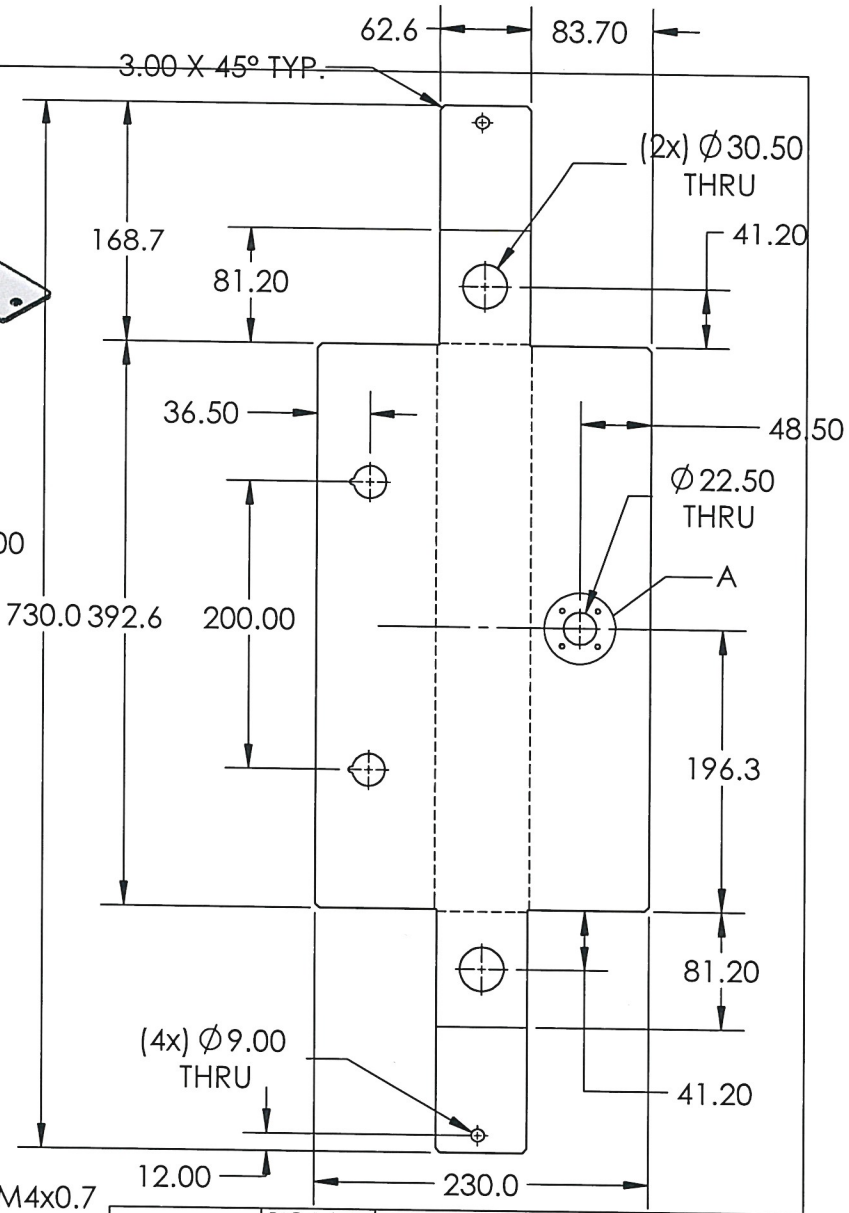

QUALITY

APROBADO A.C.C

AUTHORIZE

TALLER

NOTES:
Pieza libre de filos y rebabas.

TOTAL OF PIECES	1 Pza.
ANG. PRO	

REV	DESCRIPTION	DATE	APPROVED

REVIEWS

UNLESS OTHERWISE SPECIFIED

TOLERANCES DIMENSIONS: ISO 2768-1 mK-E, ASME Y14.5M-1994

MM	INCHES	ANGLES
+.1 -.1	+.004 -.004	+1° -1°

MATERIAL: ACERO NEGRO

SURFACE TREATMENT: PINTURA EN POLVO (RAL 9002)

HARDNESS: N/A

PAG. 1 de 1

MEDIDA ESPECIAL

JOYSON SAFETY SYSTEMS

APPROVALS		DATE
DESIGNER	AJML	5/10/2022
REVIEW	MA	5/10/2022

ALL TECHNICAL DATA DISCLOSED HERE IN IS THE PROPERTY OF JOYSON SAFETY SYSTEMS AND SHALL NOT BE USED BY ANY OTHER MANUFACTURER, PROCUREMENT OR DISCLOSURE WITHOUT WRITTEN PERMISSION OF THE OWNMER.

JOYSON TECHNICAL CENTER

MODEL NAME: BS002-P1 | SERIES No M2022-027

MACHINE NAME: BEZEL SCREW

PART NUMBER: BS002-P1-011

SIZE	PART NAME	REV.
A	BOTONERA	A

ESCALE 1:5 | DRAWING IN MILLIMETERS

JSSAM-JTC-MF-FM-0002-001