REVISIONS					
ECN NO.	REV.	BY	APV.	DATE	DESCRIPTION OF CHANGE(S)
21614	D	TGD		06-12-18	D1- NOTE 8 "MILL FINISH" WAS "RAW"; D2- CLEARED REVISION COLUMN & UPDATED DRAWING FORMAT

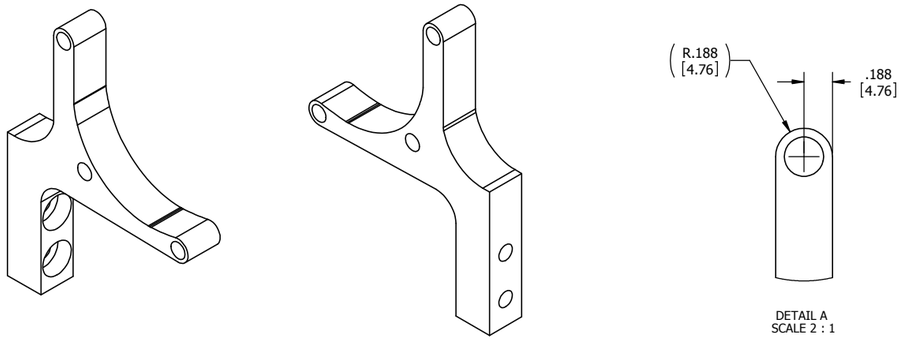

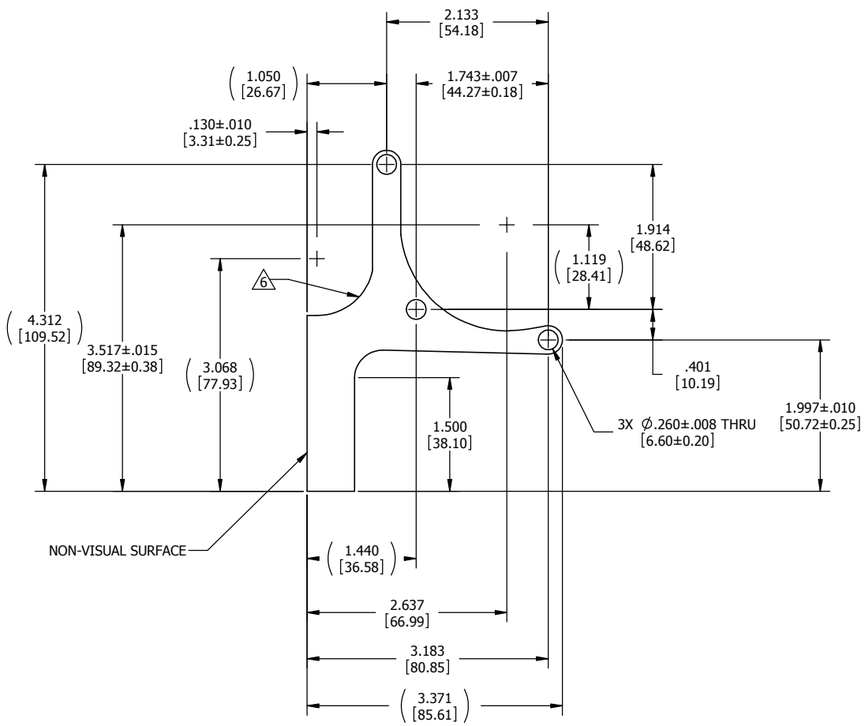

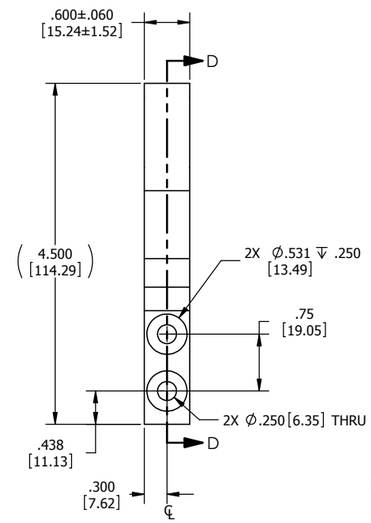

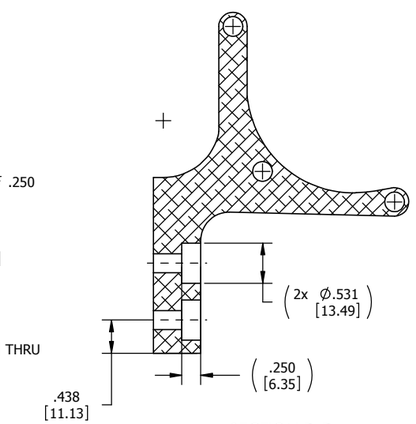

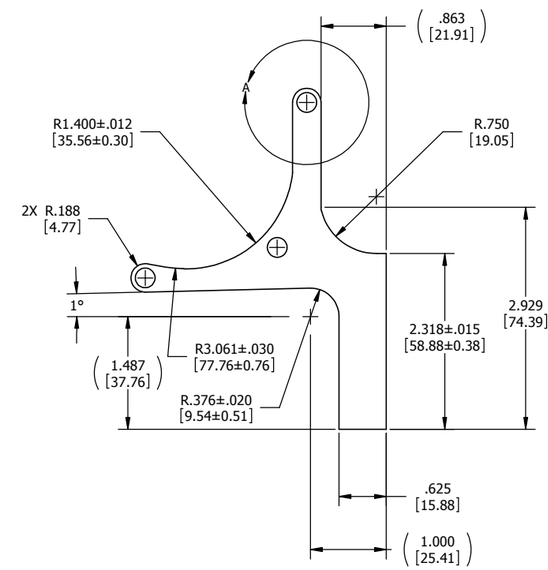

NOTES: (D1)

1 ALL RADII AND FILLETS TO BE .050 UNLESS OTHERWISE NOTED.

2 DIMENSIONS APPLY BEFORE FINISH.

3 REMOVE ALL SHARP EDGES.

4 PAINT PER ENGINEERING STANDARD 10-4.

5 ALL VISUAL SURFACES TO BE 125 µin [3.17 MICRON] RMS MAX

6 VENDOR ID MARK PER DOMETIC 3103777.003 ID MARK SHOULD BE RECESSED.

7 VISUAL SURFACE : ALL UNLESS OTHERWISE NOTED.

8 REPLACE (#) IN PART NUMBER WITH : HARDWARE COLOR CODE, SEE DRAWING 3310896.000
(BLANK)= MILL FINISH

DIMENSIONING AND TOLERANCING IN ACCORDANCE WITH ASME Y14.5-2009

UNLESS OTHERWISE SPECIFIED, ALL DIMENSIONS IN INCHES [MILLIMETERS], ANGLES IN DEGREES

ANY CHANGES TO MATERIAL, TOOLING, OR MANUFACTURING PROCESS MUST BE REAPPROVED PER CURRENT DOMETIC QUALITY PROCESS

PARAMETERS FOR REFERENCE
VOLUME (in³): X
SURFACE AREA (in²): 3.55
CROSS SECTION (in²): X
PERIMETER (in): 16.98

PAPER SIZE: D

DO NOT SCALE DRAWING

REFER TO DOMETIC QUALITY DESIGNATION STANDARD 12-50

THIRD ANGLE PROJECTION

DOMETIC
509 S. Poplar St. LaGrange IN 46761 USA

NAME: BRACKET, CRADLE

DIMENSIONAL TOLERANCES UNLESS NOTED OTHERWISE:
X: ±.1[2.5]
.XX: ±.03[.8]
.XXX: ±.005[.13]
ANGULAR: ±1°

MATERIAL: 6063-T6

DRAWN BY:	DATE DRAWN:	SCALE:
JC	11-21-05	1:1

DRAWING NUMBER: 3310185.XXX#

SHEET: 1 OF 1

COPYRIGHT 2018, DOMETIC CORPORATION. NOTICE: THIS DRAWING, AND THE INFORMATION CONTAINED HEREON, ARE CONFIDENTIAL AND PROPRIETARY TO DOMETIC CORPORATION. THIS DRAWING IS PROTECTED BY US AND INTERNATIONAL COPYRIGHT LAWS. NEITHER THE DRAWING NOR THE INFORMATION DISCLOSED ON IT MAY BE TRANSFERRED, USED, OR COPIED EXCEPT FOR DOMETIC'S BENEFIT AND BY DOMETIC'S WRITTEN DIRECTION OR CONSENT. IF YOU ARE IN POSSESSION OF THIS DRAWING WITHOUT DOMETIC'S WRITTEN INSTRUCTION OR CONSENT, PLEASE RETURN IT IMMEDIATELY TO DOMETIC. USE OF THIS DRAWING UNDER SERVICE OR SUPPLY OBLIGATION TO DOMETIC IS STRICTLY LIMITED TO THE SPECIFICATIONS APPEARING HEREON UNLESS OTHERWISE EXPRESSLY DIRECTED IN WRITING BY DOMETIC.