General Dimension Tolerance			
0 ~ 4	± 0.1	16 ~ 63	± 0.3
4 ~ 16	± 0.2	63 ~	± 0.5

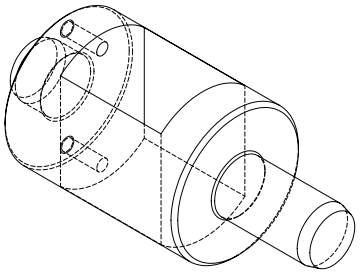

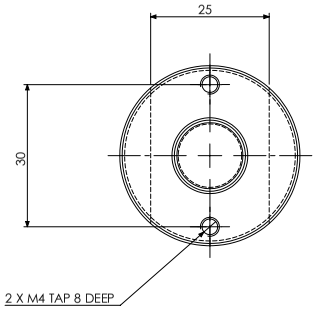

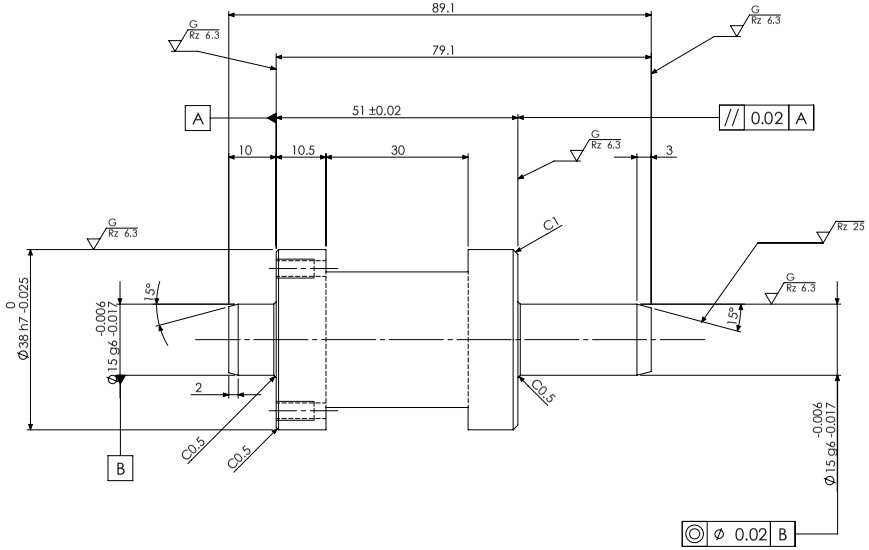

NOTE: UNLESS OTHERWISE SPECIFIED SHALL BE CHAMFER C0.5

Rz 100 (Rz 25 G Rz 6.3)

SURFACE TREATMENT	HEAT TREATMENT	WEIGHT
MICr-20±4μm	HRC: 60-62	
ALL PART	QT	
MATERIAL :	RESEMBLANCE PART No..	INFO CODE / I/O CODE
SKS3 (AISI 01)		
PART NAME: PIN		
DENSO MEXICO	DWG NO. M-1059926-040	A2 / A3P CODE / SHEET 1 OF 1
APPROVED / CHECKED / CHECKED / DISIGNED / DRAWN	QTY.: 1 No.: 4	SCALE:2:1

CONFIDENTIAL