NAME	DATE	TIME (HRS)

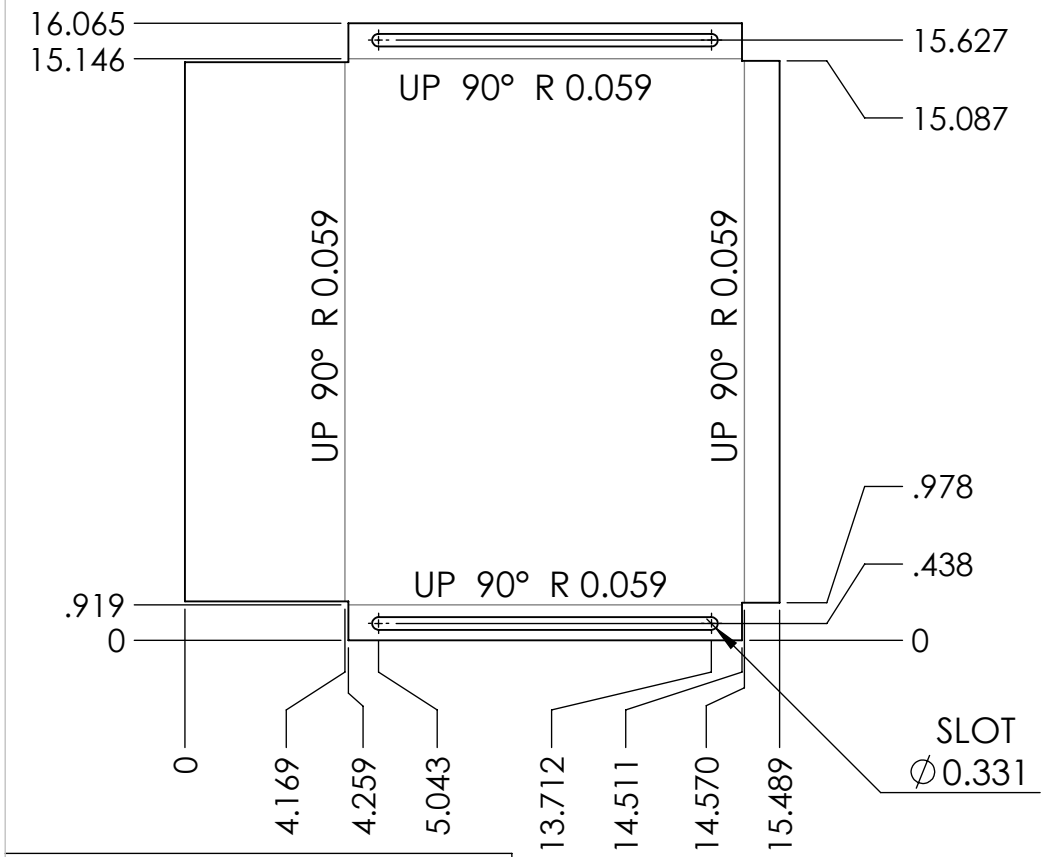

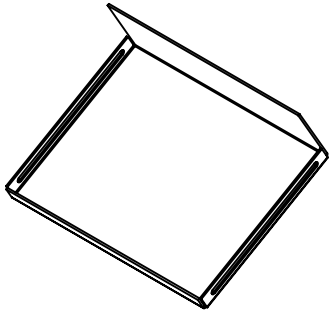

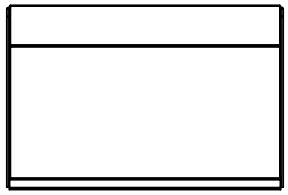

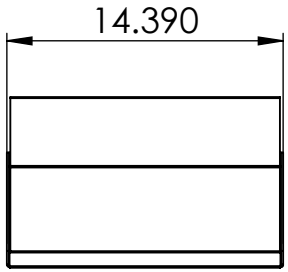

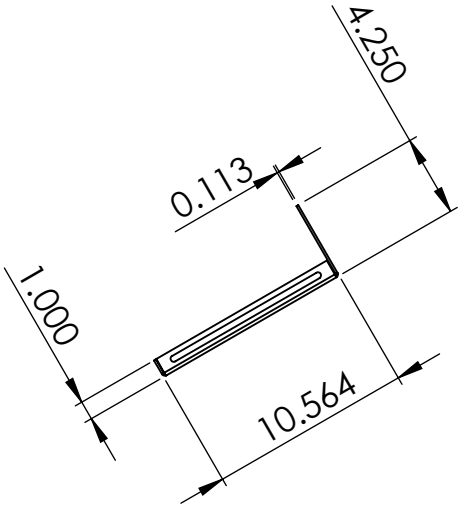

QUALITY

AUTHORIZE

TALLER

NOTES:
Pieza libre de filos y rebabas.

TOTAL OF PIECES	1 Pza.
ANG. PRO	

REV	DESCRIPTION	DATE	APPROVED

REVIEWS

UNLESS OTHERWISE SPECIFIED

TOLERANCES DIMENSIONS ISO 2768-1 mK-E ASME Y14.5M-1994

MM	INCHES	ANGLES
+.1 -.1	+.004 -.004	+1°-1°

MATERIAL: LAMINA 1018

SURFACE TREATMENT: PINTURA ELECTROSTATICA RAL9002

HARDNESS:

PAG. 1 de 1

MEDIDA ESPECIAL

ALL TECHNICAL DATA DISCLOSED HERE IN IS THE PROPERTY OF JOYSON SAFETY SYSTEMS AND SHALL NOT BE USED BY ANY OTHER MANUFACTURER, PROCUREMENT OR DISCLOSURE WITHOUT WRITTEN PERMISSION OF THE OWNMER.

JOYSON SAFETY SYSTEMS

APPROVALS		DATE
DESIGNER	RSMV	20/07/21
REVIEW	JATA	20/07/21

JOYSON TECHNICAL CENTER

MODEL NAME: AMB001-AC SERIES No M2021-095

MACHINE NAME: ATORNILLADORA DE MINI BUCKLE

PART NUMBER: AMB001-AC-206

SIZE	PART NAME	REV.
A	PART 206	A

ESCALE 1:10 **DRAWING IN** INCHES

JSSAM-JTC-MF-FM-0002-001