NAME	DATE	TIME (HRS)

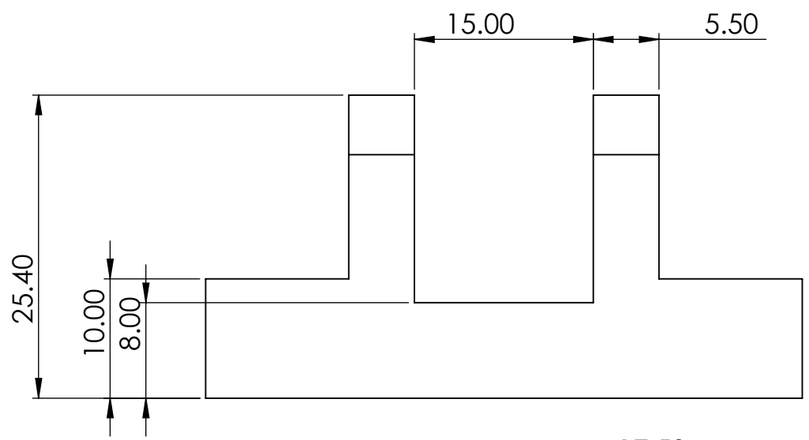

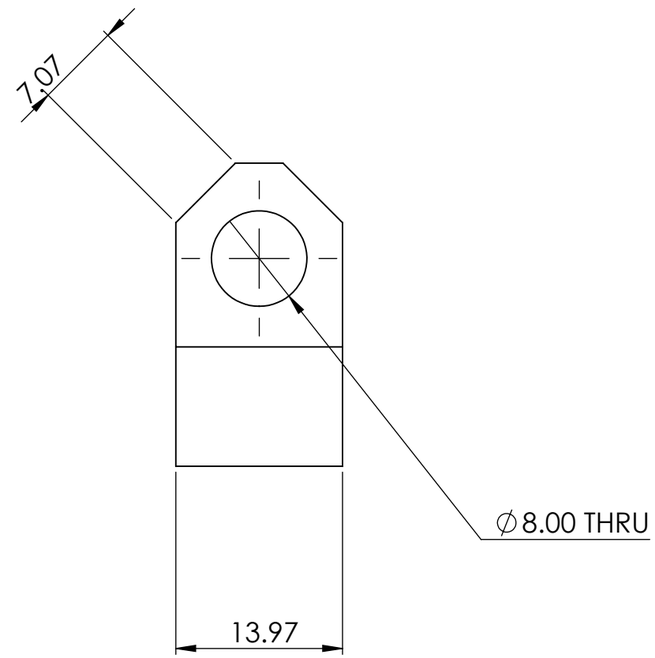

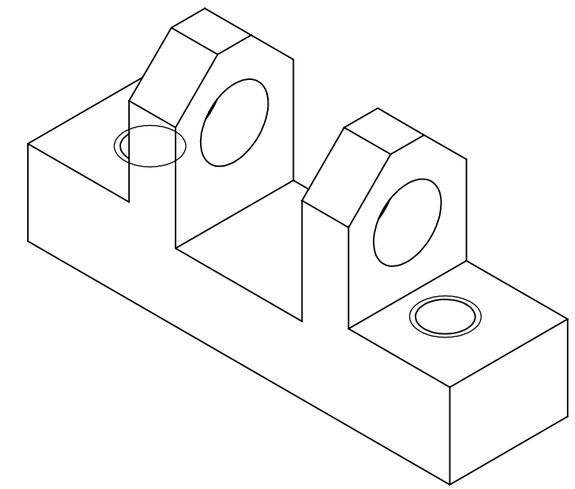

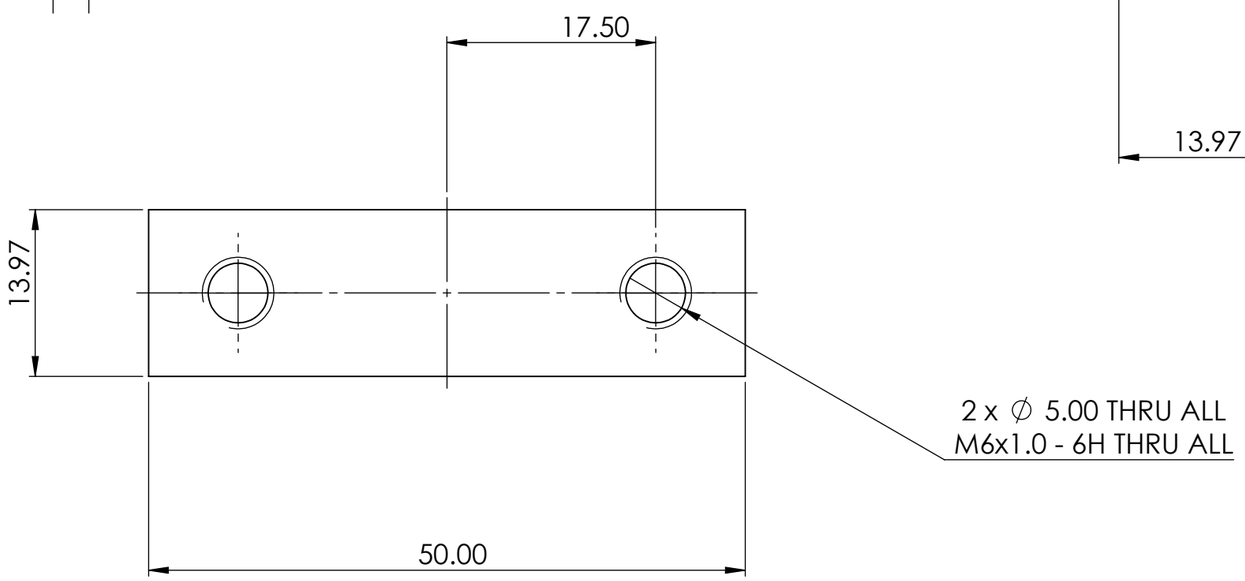

FM002-MVA-301-008

PAG. 1 de 1

E MEDIDA ESPECIAL

ALL TECHNICAL DATA DISCLOSED HERE IN IS THE PROPERTY OF JOYSON SAFETY SYSTEMS AND SHALL NOT BE USED BY ANY OTHER MANUFACTURER, PROCUREMENT OR DISCLOSURE WITHOUT WRITTEN PERMISSION OF THE OWNMER.

AUTHORIZE	TALLER	QUALITY

NOTES:
Pieza libre de filos y rebabas.

REV	DESCRIPTION	DATE	APPROVED

REVIEWS

TOTAL OF PIECES: 6 Pza.

ANG. PROF

UNLESS OTHERWISE SPECIFIED

TOLERANCES DIMENSIONS	ISO 2768-1 mK-E ASME Y14.5M-1994	
MM	INCHES	ANGLES
+.1 -.1	+.004 -.004	+1° -1°

MATERIAL:	1018 Cold Rolled
SURFACE TREATMENT	Galvanizado
HARDNESS	N.A

JOYSON SAFETY SYSTEMS

APPROVALS		DATE
DESIGNER		7/3/2022
REVIEW	JEC	7/3/2022

JOYSON TECHNICAL CENTER

MODEL NAME	FM002-MVA	SERIES No	M2022-007
MACHINE NAME			
PART NUMBER	FM002-MVA-301-008		
SIZE **B**	PART NAME: BASE PARA JUNTA 2		REV.
ESCALE: 2:1		DRAWING IN MILLIMETERS	