NAME	DATE	TIME (HRS)

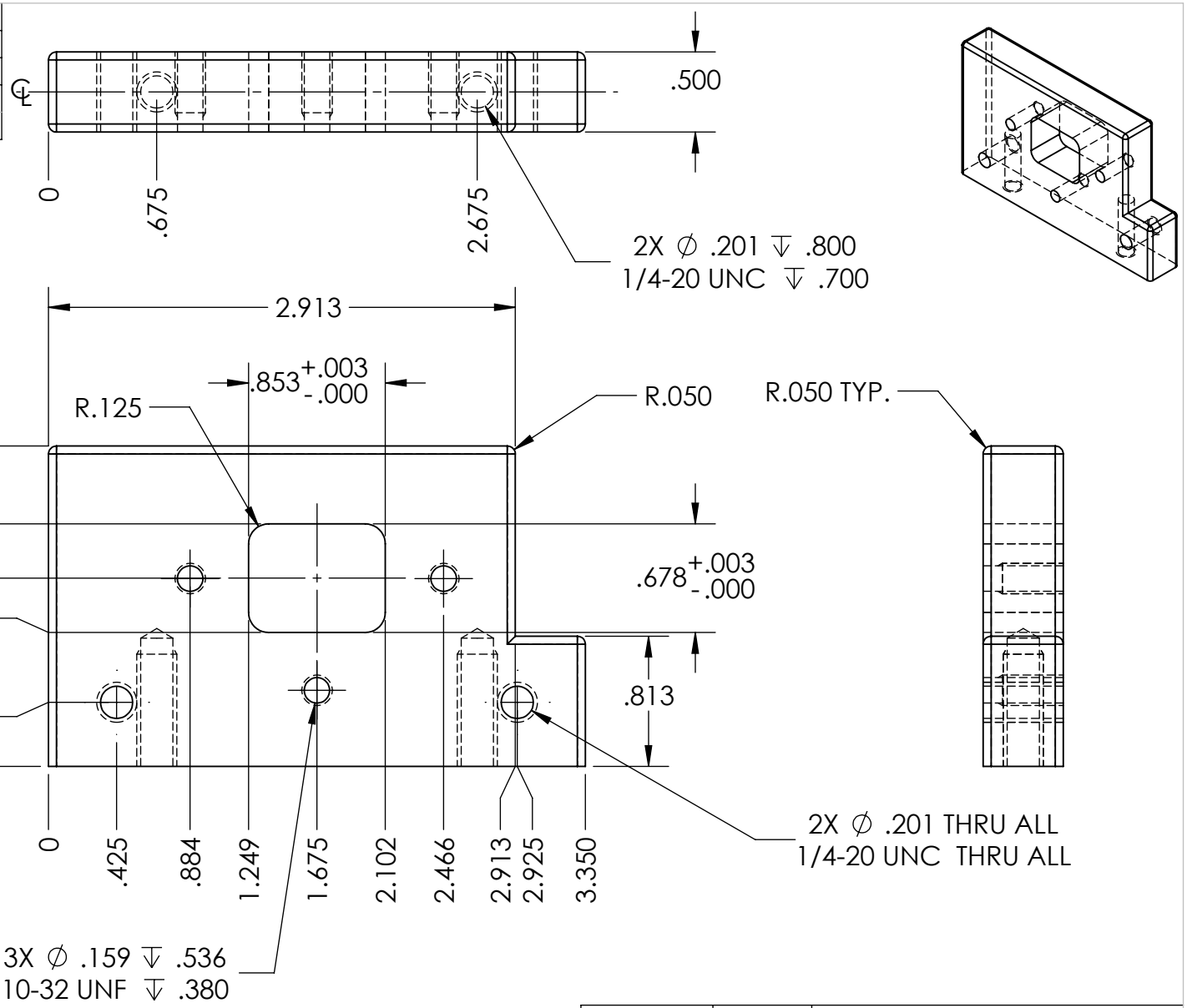

QUALITY

AUTHORIZE | TALLER

NOTES:
Pieza libre de filos y rebabas.

TOTAL OF PIECES	1 Pzas.
ANG. PRO	

REV	DESCRIPTION	DATE	APPROVED

REVIEWS

UNLESS OTHERWISE SPECIFIED

TOLERANCES DIMENSIONS ISO 2768-1 mK-E ASME Y14.5M-1994

MM	INCHES	ANGLES
+.1 -.1	+.004 -.004	+1°-1°

MATERIAL: ACERO 4140 T

SURFACE TREATMENT: GALVANIZED

HARDNESS: N/A

GT001-AC-042 | PAG. 1 de 1

E MEDIDA ESPECIAL

JOYSON SAFETY SYSTEMS

APPROVALS		DATE
DESIGNER	MCRH	24/JUN/2021
REVIEW	JATA	24/JUN/2021

ALL TECHNICAL DATA DISCLOSED HERE IN IS THE PROPERTY OF JOYSON SAFETY SYSTEMS AND SHALL NOT BE USED BY ANY OTHER MANUFACTURER, PROCUREMENT OR DISCLOSURE WITHOUT WRITTEN PERMISSION OF THE OWNMER.

JOYSON TECHNICAL CENTER

MODEL NAME: GT001-AC | SERIES No: M2021-089

MACHINE NAME: G-TESTER NUM.1

PART NUMBER: GT001-AC-042

SIZE	PART NAME	REV.
A	PART 042	A

ESCALE 1:1 | DRAWING IN INCHES

JSSAM-JTC-MF-FM-0002-001