NAME	DATE	TIME (HRS)

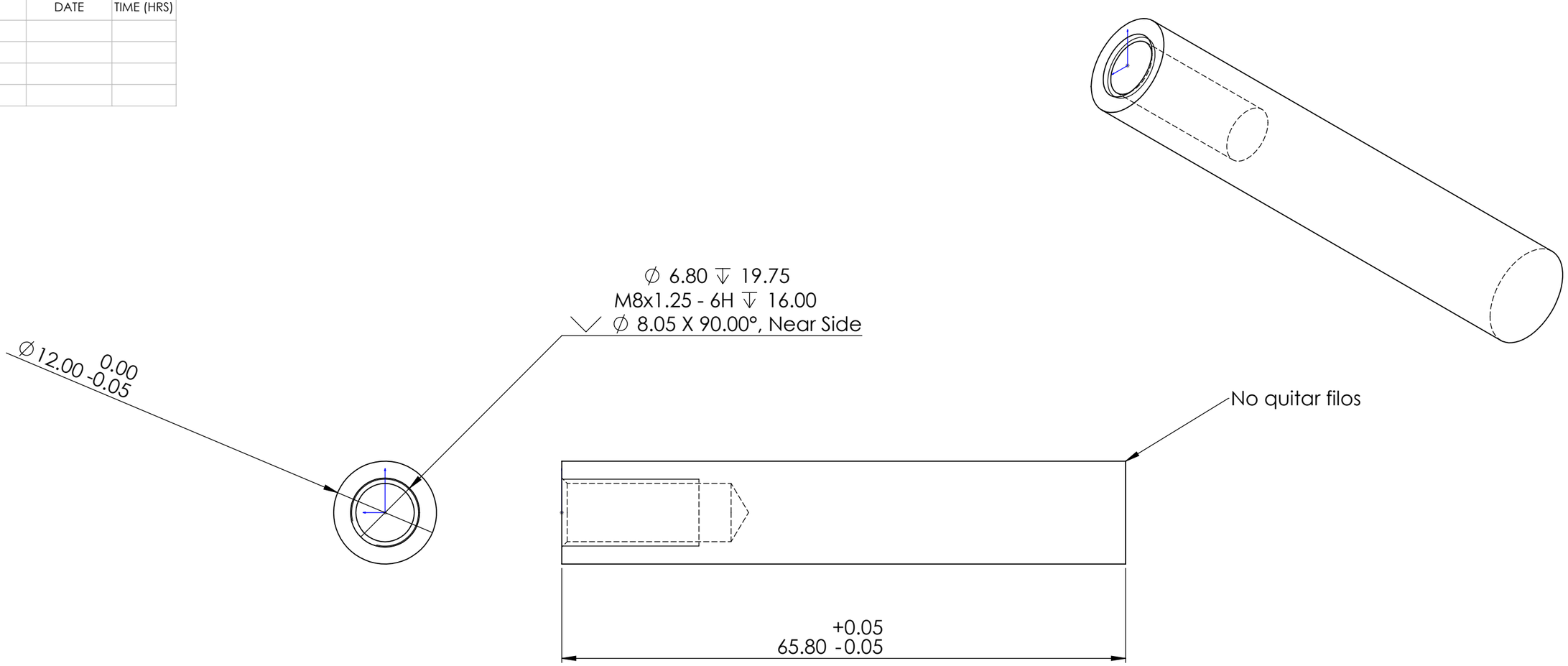

TOQ008-MVA-603-015

PAG. 1 de 1

E MEDIDA ESPECIAL

ALL TECHNICAL DATA DISCLOSED HERE IN IS THE PROPERTY OF JOYSON SAFETY SYSTEMS AND SHALL NOT BE USED BY ANY OTHER MANUFACTURER, PROCUREMENT OR DISCLOSURE WITHOUT WRITTEN PERMISSION OF THE OWNMER.

JOYSON
EQUIPO AUTOMOTRIZ AMERICANA S.A. DE C.V.
BOLSAS DE AIRE
NOMBRE: RM
FIRMA:

AUTHORIZE | TALLER | QUALITY

NOTES:
Pieza libre de filos y rebabas.

REV	DESCRIPTION	DATE	APPROVED

REVIEWS

TOTAL OF PIECES: 1 Pza.
ANG. PROF

UNLESS OTHERWISE SPECIFIED
TOLERANCES DIMENSIONS: ISO 2768-1 mK-E ASME Y14.5M-1994

MM	INCHES	ANGLES
+.1 -.1	+.004 -.004	+1° -1°

MATERIAL: SS304
SURFACE TREATMENT: NA
HARDNESS: NA

JOYSON SAFETY SYSTEMS

APPROVALS		DATE
DESIGNER	ABG	1/31/2022
REVIEW	RVM	1/31/2022

JOYSON TECHNICAL CENTER

MODEL NAME	TOQ008-MVA	SERIES No	M2022-004
MACHINE NAME	QCF Tooling VOLVO		
PART NUMBER	TOQ008-MVA-603-015		
SIZE **B**	PART NAME		REV. **A**
ESCALE: 2:1		DRAWING IN MILLIMETERS	

JSSAM-JTC-MF-FM-0002