NAME	DATE	TIME (HRS)

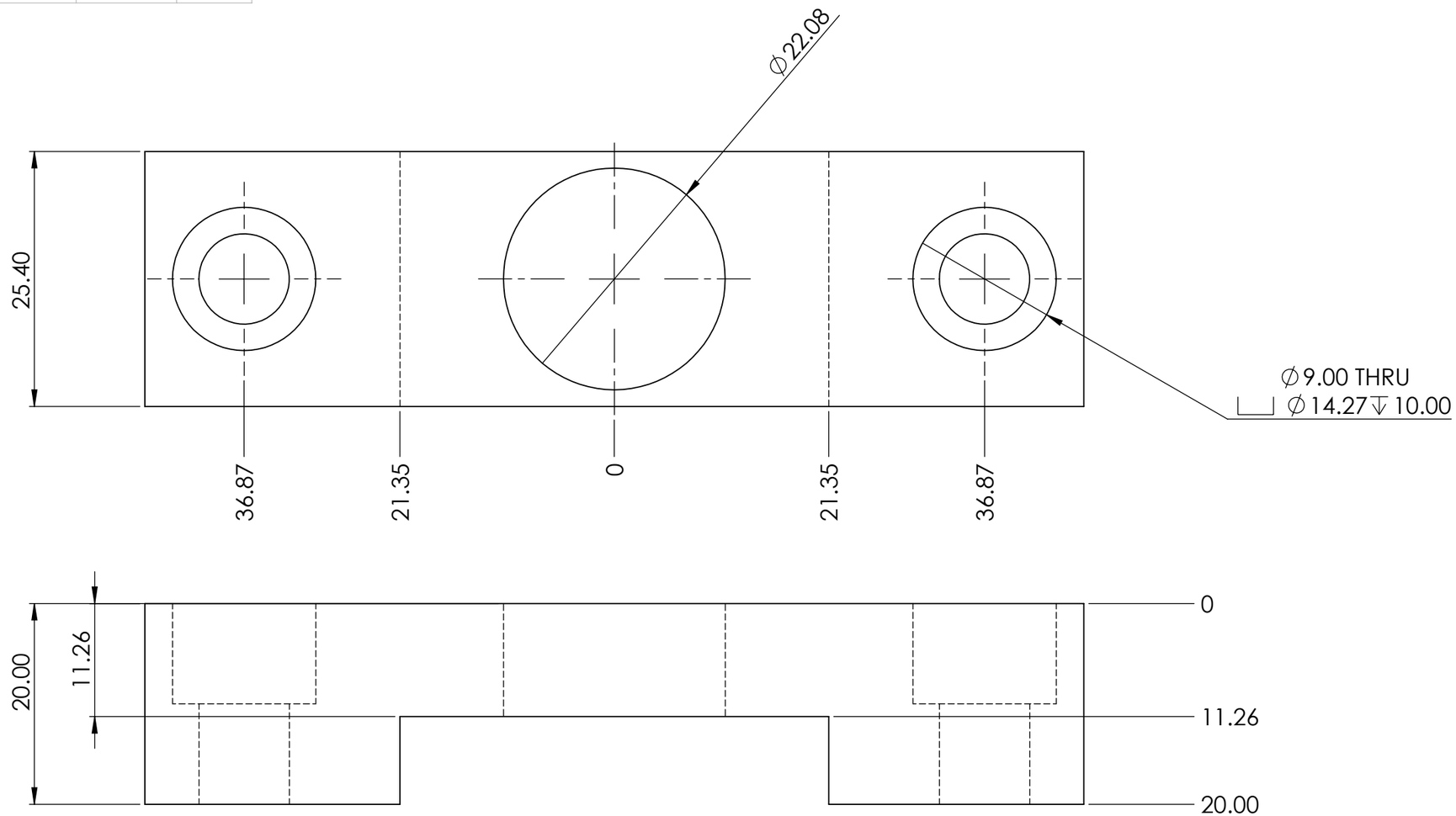

RP003-TRN-202-001

PAG. 1 de 1

MEDIDA ESPECIAL

ALL TECHNICAL DATA DISCLOSED HERE IN IS THE PROPERTY OF JOYSON SAFETY SYSTEMS AND SHALL NOT BE USED BY ANY OTHER MANUFACTURER, PROCUREMENT OR DISCLOSURE WITHOUT WRITTEN PERMISSION OF THE OWNMER.

AUTHORIZE	TALLER	QUALITY

NOTES:

Pieza libre de filos y rebabas.

TOTAL OF PIECES	Pza.
ANG. PROF	

REV	DESCRIPTION	DATE	APPROVED

REVIEWS

UNLESS OTHERWISE SPECIFIED

TOLERANCES DIMENSIONS	ISO 2768-1 mK-E ASME Y14.5M-1994	
MM	INCHES	ANGLES
+.1 -.1	+.004 -.004	+1° -1°

MATERIAL:	A2
SURFACE TREATMENT	Pavonado
HARDNESS	58-60 HRC

JOYSON SAFETY SYSTEMS

APPROVALS		DATE
DESIGNER	GFM	30/06/2022
REVIEW	EG	30/06/2022

JOYSON TECHNICAL CENTER

MODEL NAME	SERIES No
MACHINE NAME	
PART NUMBER	RP003-TRN-202-001

SIZE	PART NAME	REV.
B	Placa Botado	

ESCALE: 2:1 | DRAWING IN MILLIMETERS

TKH-MTC-MF-FM-0016-005