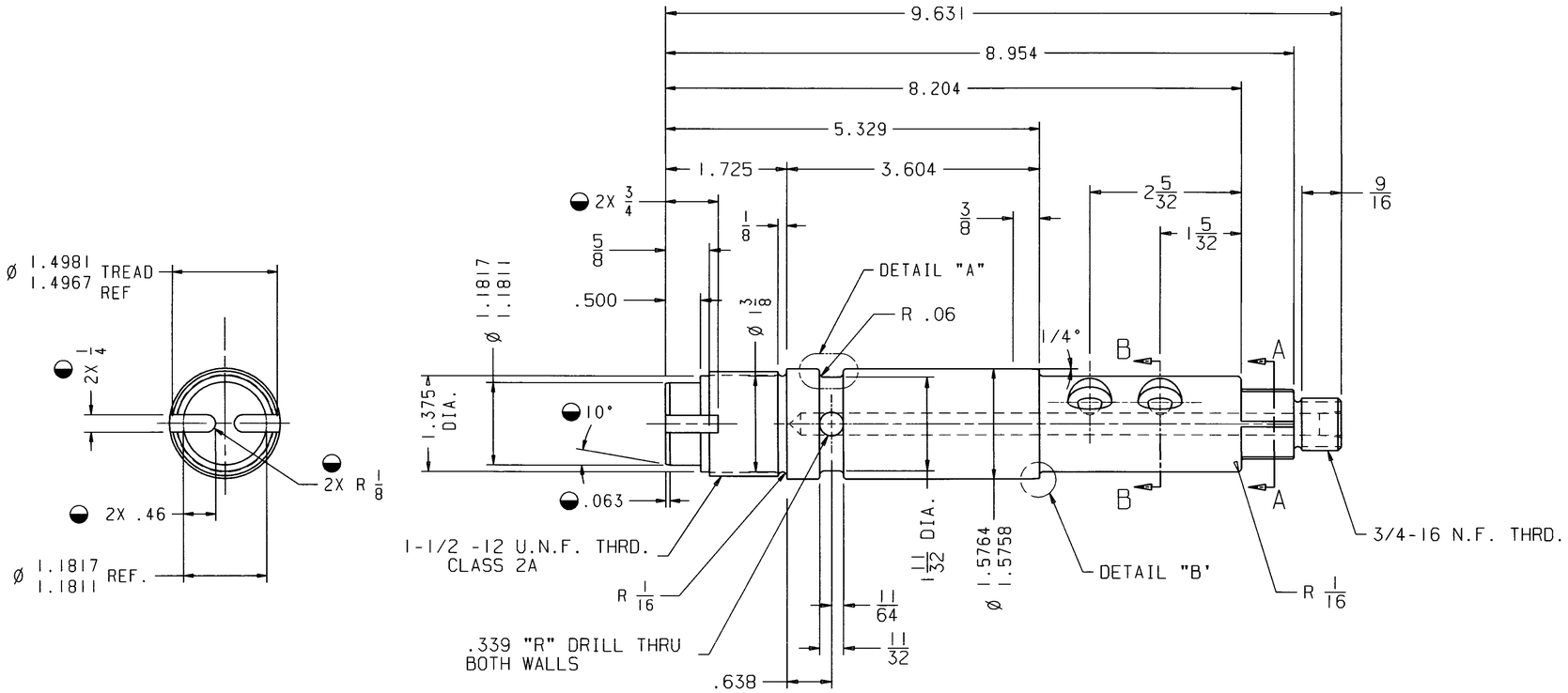

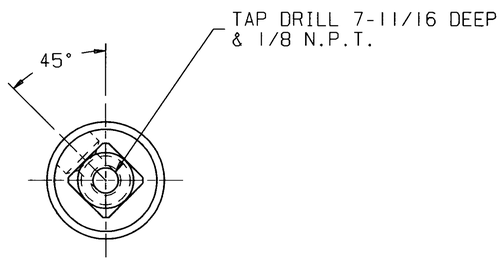

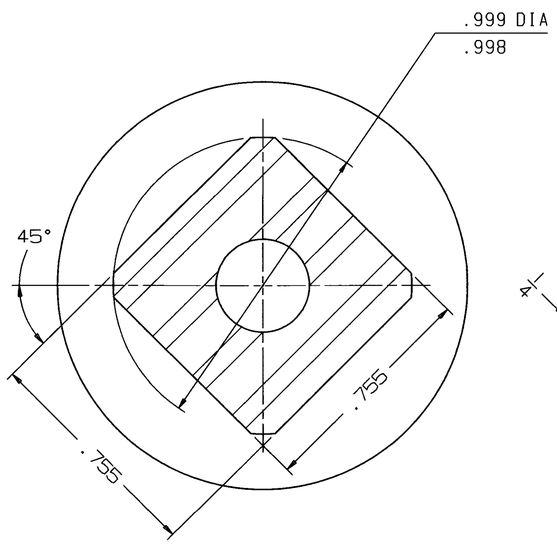

SECTION A-A
SCALE 4 TO 1

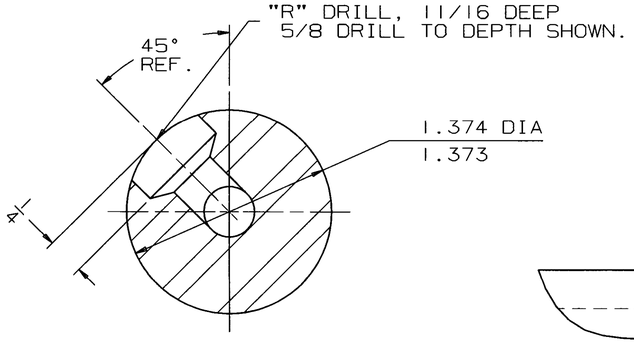

SECTION B-B
SCALE 2 TO 1

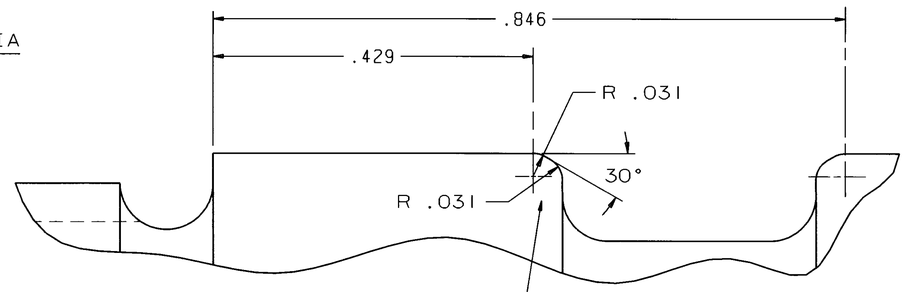

DETAIL "A"
SCALE 10 TO 1

TYPICAL BOTH SIDES OF GROOVE

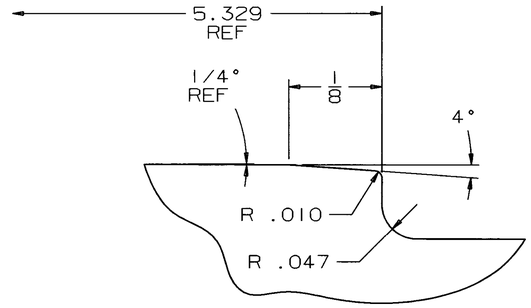

DETAIL "B"
SCALE 10 TO 1

3) CAN BE MADE FROM PART OIS-19-1442 BY REWORKING PER DIMENSIONS MARKED WITH THIS SYMBOL ◒

2) LINDURE TO .002/.003 DEPTH.

1) ALL DECIMAL DIMENSIONS MUST BE CONCENTRIC WITHIN .001 T.I.R. UNLESS OTHERWISE SPECIFIED.

NOTES:

F321633

M

				CHANGES

"INFORMATION CONTAINED HEREIN CONSTITUTES PROPRIETARY CONFIDENTIAL AND TRADE SECRET INFORMATION OF OWENS-ILLINOIS, INC., AND IS TO BE ACCEPTED SUBJECT TO THAT UNDERSTANDING. IT IS TO BE KEPT CONFIDENTIAL AND NOT TO BE COPIED, USED, OR CONVEYED TO OTHERS WITHOUT OWENS-ILLINOIS' WRITTEN AUTHORIZATION."

PART TOLERANCES UNLESS OTHERWISE NOTED
MAXIMUM FINISHED SURFACE ROUGHNESS: 125
FINISHED DIMENSION TOLERANCES:
ALL FRACTIONAL DIMENSIONS: ±.015
DECIMAL X.X = ±.031 ANGULAR X = ±1°
X.XX = ±.010 X.X = ±.5°
X.XXX = ±.005 X.XX = ±.25°
UNSPECIFIED THREADS ARE CLASS 2, BREAK ALL SHARP EDGES 1/32 MAX. & MARK PART NO. AT Ⓧ

PART NAME:	THREADED SUPPORT SHAFT		
MATERIAL:	AISI-4140		
TREATMENT:	PREHEAT TREAT Rc 30-34		
DRAWN:	R.FLYNN	SCALE:	FULL
CHECKED:		LIBRARY:	
DATE:	5-24-00	SEQ. NO.:	

OWENS-BROCKWAY
GLASS CONTAINERS, a unit of Owens-Illinois
DRAWING NUMBER
OIS-19-1442-A

UNITS: INCHES | SHEET NO.:
USED ON: OIS-19-1496-0