REVISIONS			
SYM.	DESCRIPTION	DATE	APPROVED

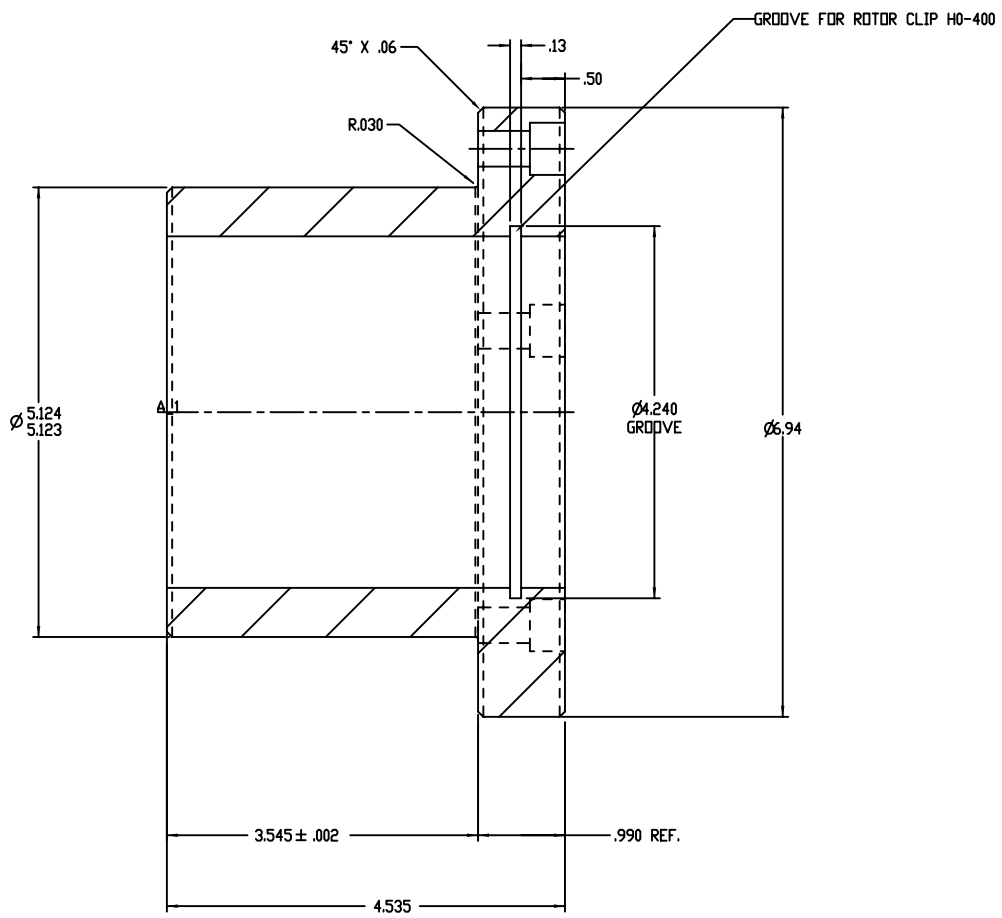

SECTION
A-A

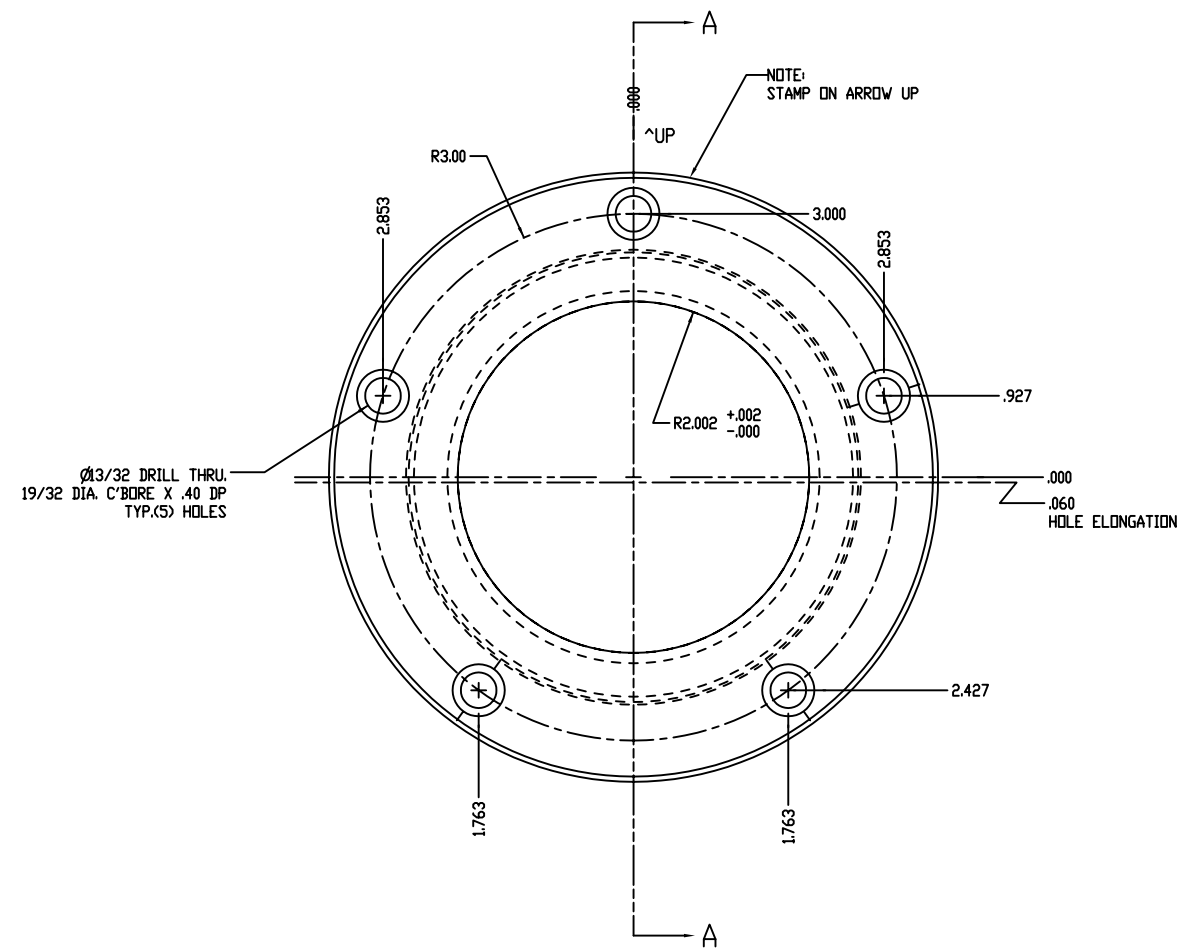

APPROX. TOTAL FINISHED WEIGHT:			16 LBS	
	8	SAE 660 BRONZE	7.00 OD X 3.50 ID X 4.75 LG.	44
ITEM	QTY.	MATERIAL	DESCRIPTION	WT.LBS

EAGLE PRESS & EQUIPMENT CO. LTD.

PLOT IS ONLY TO SCALE IF D-SIZE FORMAT OTHERWISE DO NOT SCALE TO PRINT

UNLESS OTHERWISE SPECIFIED, ALL DIMENSIONS IN INCHES.

DIMENSIONAL TOLERANCES UNLESS OTHERWISE SPECIFIED
INCHES
2 PLACE ±.01
3 PLACE ±.001
4 PLACE ±.0005

CONFIDENTIAL
THIS DRAWING, INCLUDING ALL INFORMATION CONTAINED THEREON, IS THE EXCLUSIVE PROPRIETARY PROPERTY OF EAGLE PRESS & EQUIPMENT CO. LTD. ITS DISCLOSED WITH THE UNDERSTANDING THAT IT WILL BE RETAINED IN CONFIDENCE AND WILL NEITHER BE DUPLICATED OR COPIED IN WHOLE OR IN PART NOR USED FOR ANY PURPOSE OTHER THAN FOR WHICH IT HAS BEEN DISCLOSED.

JOB NO.	DESIGNED	DRAWN	1650 TON EAGLE PRESS WRIST PIN BUSHING
1207	--	GL	
MODEL NO.	REF.	CHECKED	
SL4-1650-200-72	1019A	---	(SHEET 1 OF 1)
CUSTOMER	DATE	SCALE	DRAWING NO: / REV.NO.
METALSA	10/21/04	1.000	261A-1207 / -