| NAME | DATE | TIME (HRS) |
|---|---|---|
| | | |
| | | |
| | | |
| | | |

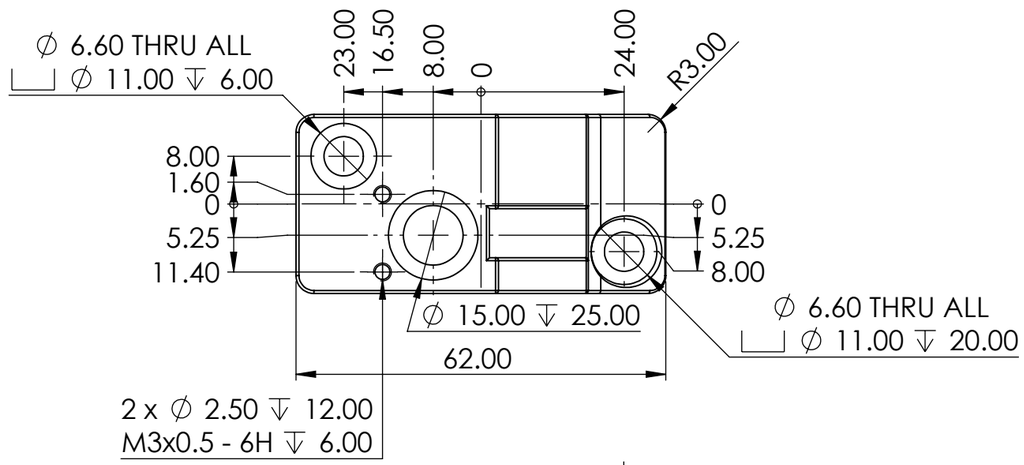


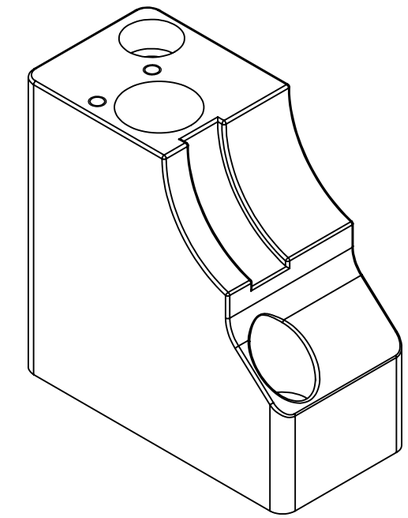

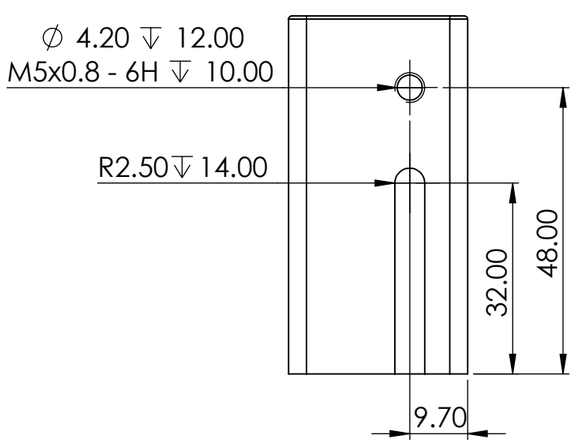


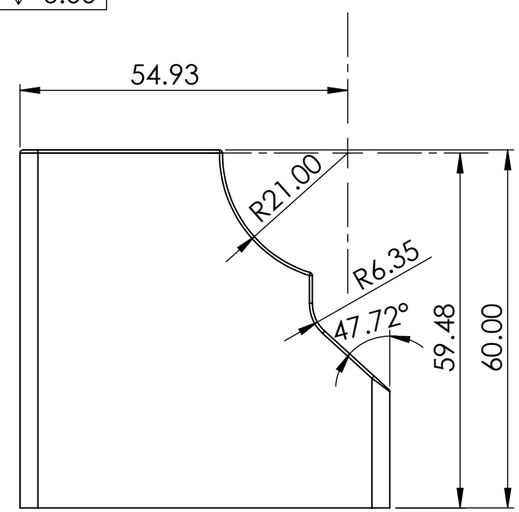


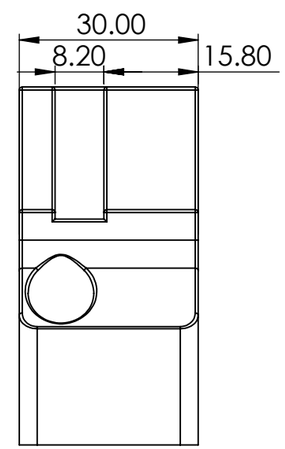


WGB001-AC-301-004

PAG. 1 de 1

MEDIDA ESPECIAL

**ALL TECHNICAL DATA DISCLOSED HERE IN IS THE PROPERTY OF JOYSON SAFETY SYSTEMS AND SHALL NOT BE USED BY ANY OTHER MANUFACTURER, PROCUREMENT OR DISCLOSURE WITHOUT WRITTEN PERMISSION OF THE OWNMER.**

| AUTHORIZE | TALLER | QUALITY |
|---|---|---|

**NOTES:**

Pieza libre de filos y rebabas.

| REV | DESCRIPTION | DATE | APPROVED |
|---|---|---|---|
| | | | |
| | | | |
| | | | |

REVIEWS

TOTAL OF PIECES: 1 Pza.

ANG. PROF

UNLESS OTHERWISE SPECIFIED

TOLERANCES DIMENSIONS: ISO 2768-1 mK-E ASME Y14.5M-1994

| MM | INCHES | ANGLES |
|---|---|---|
| +.1 -.1 | +.004 -.004 | +1° -1° |

MATERIAL: D2 Steel

SURFACE TREATMENT: Pavonado

HARDNESS: HRC 50-55

JOYSON SAFETY SYSTEMS

| APPROVALS | | DATE |
|---|---|---|
| DESIGNER | ABG | 7/10/2021 |
| REVIEW | RVM | 7/10/2021 |

**JOYSON TECHNICAL CENTER**

| | | | |
|---|---|---|---|
| MODEL NAME | M2021-069 | SERIES No | WGB001-AC |
| MACHINE NAME | WING GUARD BEV3 L233 | | |
| PART NUMBER | WGB001-AC-301-004 | | |
| SIZE **B** | PART NAME WGB001-AC-301-004 | | REV. **A** |
| ESCALE: 1:1 | | DRAWING IN MILLIMETERS | |