| NAME | DATE | TIME (HRS) |
|---|---|---|
| | | |
| | | |
| | | |
| | | |

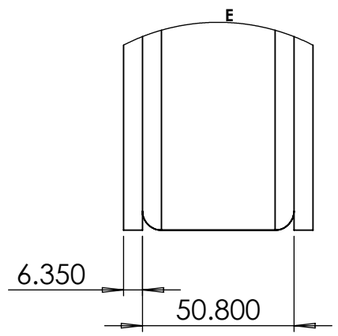


DETAIL A

SCALE 1 : 2

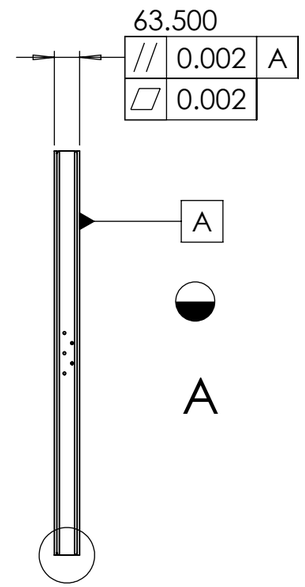


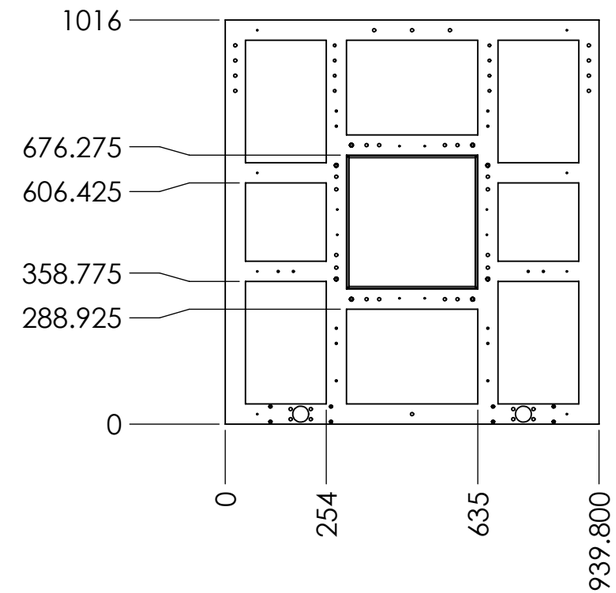


*DIBUJO con dimensiones en PULGADAS
para facilitar los cortes.

PFM009-MVA-301-000

PAG. 1 de 5

E MEDIDA ESPECIAL

**ALL TECHNICAL DATA DISCLOSED HERE IN IS THE PROPERTY OF JOYSON SAFETY SYSTEMS AND SHALL NOT BE USED BY ANY OTHER MANUFACTURER, PROCUREMENT OR DISCLOSURE WITHOUT WRITTEN PERMISSION OF THE OWNMER.**

JOYSON
EQUIPO AUTOMOTRIZ AMERICANA S.A. DE C.V.
BOLSAS DE AIRE
NOMBRE: RM
FIRMA:

AUTHORIZE | TALLER | QUALITY: 1

**NOTES:**
Pieza libre de filos y rebabas.

2x2" PTR - Cal. 1/4
Color TAKATA

| REV | DESCRIPTION | DATE | APPROVED |
|---|---|---|---|
| N.A. | REVIEWS | | |

TOTAL OF PIECES: Pza.
ANG. PROF

UNLESS OTHERWISE SPECIFIED
TOLERANCES DIMENSIONS: ISO 2768-1 mK-E ASME Y14.5M-1994

| MM | INCHES | ANGLES |
|---|---|---|
| +.1 -.1 | +.004 -.004 | +1° -1° |

MATERIAL: PTR CALIBRE 1/4
SURFACE TREATMENT: COLOR JOYSON
HARDNESS: NA

JOYSON SAFETY SYSTEMS

| APPROVALS | | DATE |
|---|---|---|
| DESIGNER | ABG | 1/30/2022 |
| REVIEW | RVM | 1/30/2022 |

**JOYSON TECHNICAL CENTER**

MODEL NAME: PFM009-MVA | SERIES No: M2022-003
MACHINE NAME: QCF- VOVLO DAB
PART NUMBER: PFM009-MVA-301-000
SIZE: B | PART NAME: NG UPPER FRAME | REV.
ESCALE: 1:15 | DRAWING IN MILLIMETERS

JSSAM-JTC-MF-FM-0002-001

| NAME | DATE | TIME (HRS) |
|---|---|---|
| | | |
| | | |
| | | |
| | | |

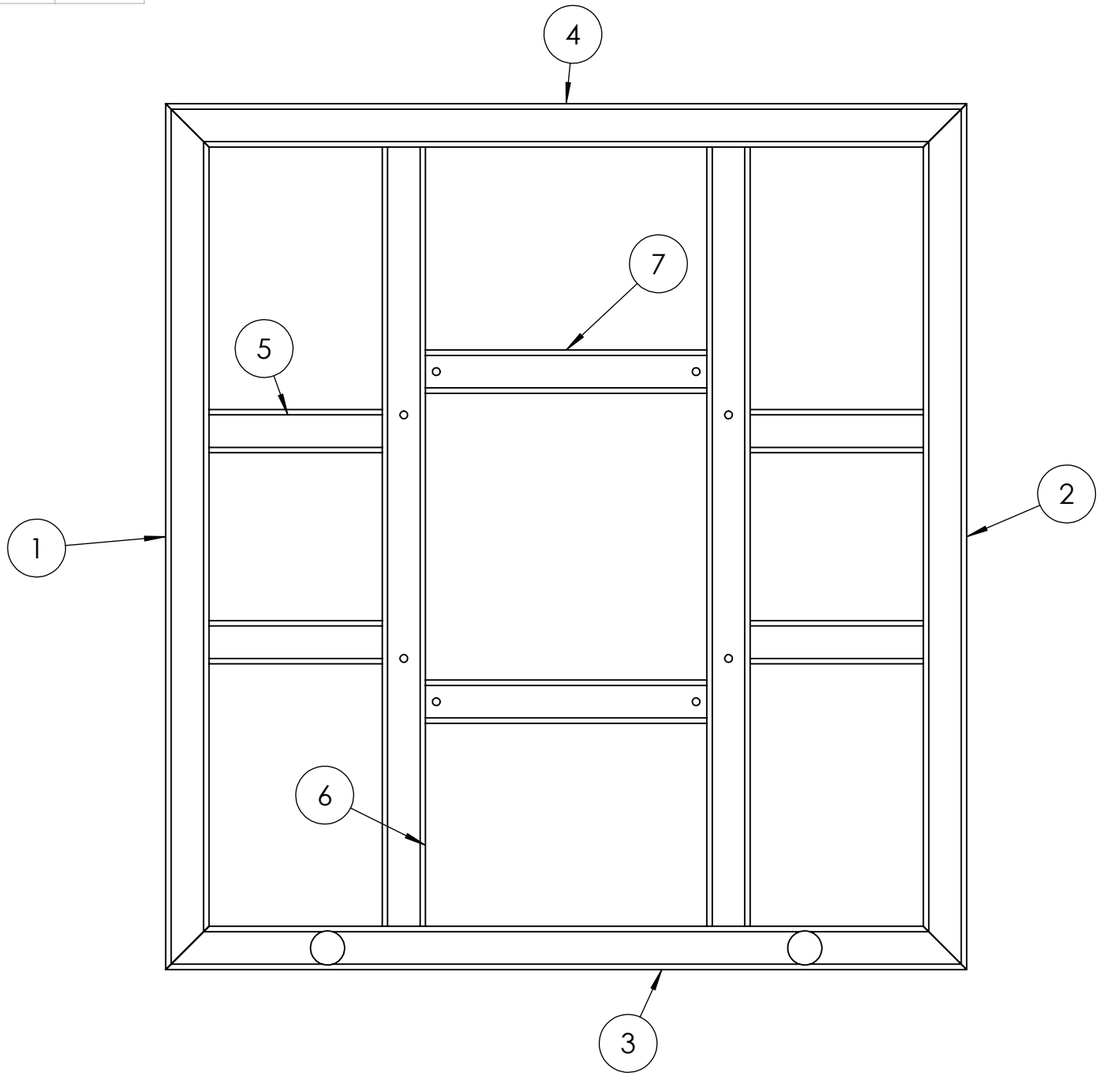


| ITEM NO. | PART NUMBER | DESCRIPTION | Default/QTY. |
|---|---|---|---|
| 1 | PFM009-MVA-301-003 | 2 X 2 X 40, Steel Tubing | 1 |
| 2 | PFM009-MVA-301-004 | 2 X 2 X 40, Steel Tubing | 1 |
| 3 | PFM009-MVA-301-005 | 2 X 2 X 37, Steel Tubing | 1 |
| 4 | PFM009-MVA-301-006 | 2 X 2 X 37, Steel Tubing | 1 |
| 5 | PFM009-MVA-301-007 | 2 X 2 X 8, Steel Tubing | 4 |
| 6 | PFM009-MVA-301-008 | 2 X 2 X 36, Steel Tubing | 2 |
| 7 | PFM009-MVA-301-009 | 2 X 2 X 13, Steel Tubing | 2 |
| 8 | PFM009-MVA-301-002 | Grinding Spacer | 1 |
| 9 | PFM009-MVA-301-001 | Grinding Spacer | 1 |
| 10 | PFM009-MVA-300-001 | PFM009-MVA-300-001 | 1 |

*DIBUJO con dimensiones en PULGADAS
para facilitar los cortes.

PFM009-MVA-301-000

PAG. 2 de 5

E MEDIDA ESPECIAL

**ALL TECHNICAL DATA DISCLOSED HERE IN IS THE PROPERTY OF JOYSON SAFETY SYSTEMS AND SHALL NOT BE USED BY ANY OTHER MANUFACTURER, PROCUREMENT OR DISCLOSURE WITHOUT WRITTEN PERMISSION OF THE OWNMER.**

JOYSON
EQUIPO AUTOMOTRIZ AMERICANA S.A. DE C.V.
BOLSAS DE AIRE
NOMBRE: RM
FIRMA:

AUTHORIZE | TALLER | QUALITY

1

**NOTES:**
Pieza libre de filos y rebabas.

TOTAL OF PIECES: Pza.
ANG. PROF

2x2" PTR - Cal. 1/4

| REV | DESCRIPTION | DATE | APPROVED |
|---|---|---|---|
| B | | | |

N.A. REVIEWS

UNLESS OTHERWISE SPECIFIED

| TOLERANCES DIMENSIONS | ISO 2768-1 mK-E ASME Y14.5M-1994 | |
|---|---|---|
| MM | INCHES | ANGLES |
| +.1 -.1 | +.004 -.004 | +1° -1° |

MATERIAL: PTR CALIBRE 1/4
SURFACE TREATMENT: COLOR JOYSON
HARDNESS: NA

JOYSON SAFETY SYSTEMS

| APPROVALS | | DATE |
|---|---|---|
| DESIGNER | ABG | 1/30/2022 |
| REVIEW | RVM | 1/30/2022 |

**JOYSON TECHNICAL CENTER**

| | | | |
|---|---|---|---|
| MODEL NAME | PFM009-MVA | SERIES No | M2022-003 |
| MACHINE NAME | QCF- VOVLO DAB | | |
| PART NUMBER | PFM009-MVA-301-000 | | |
| SIZE B | PART NAME: NG UPPER FRAME | | REV. |
| ESCALE: 1:15 | | DRAWING IN MILLIMETERS | |

JSSAM-JTC-MF-FM-0002-001

| NAME | DATE | TIME (HRS) |
|---|---|---|
| | | |
| | | |
| | | |
| | | |

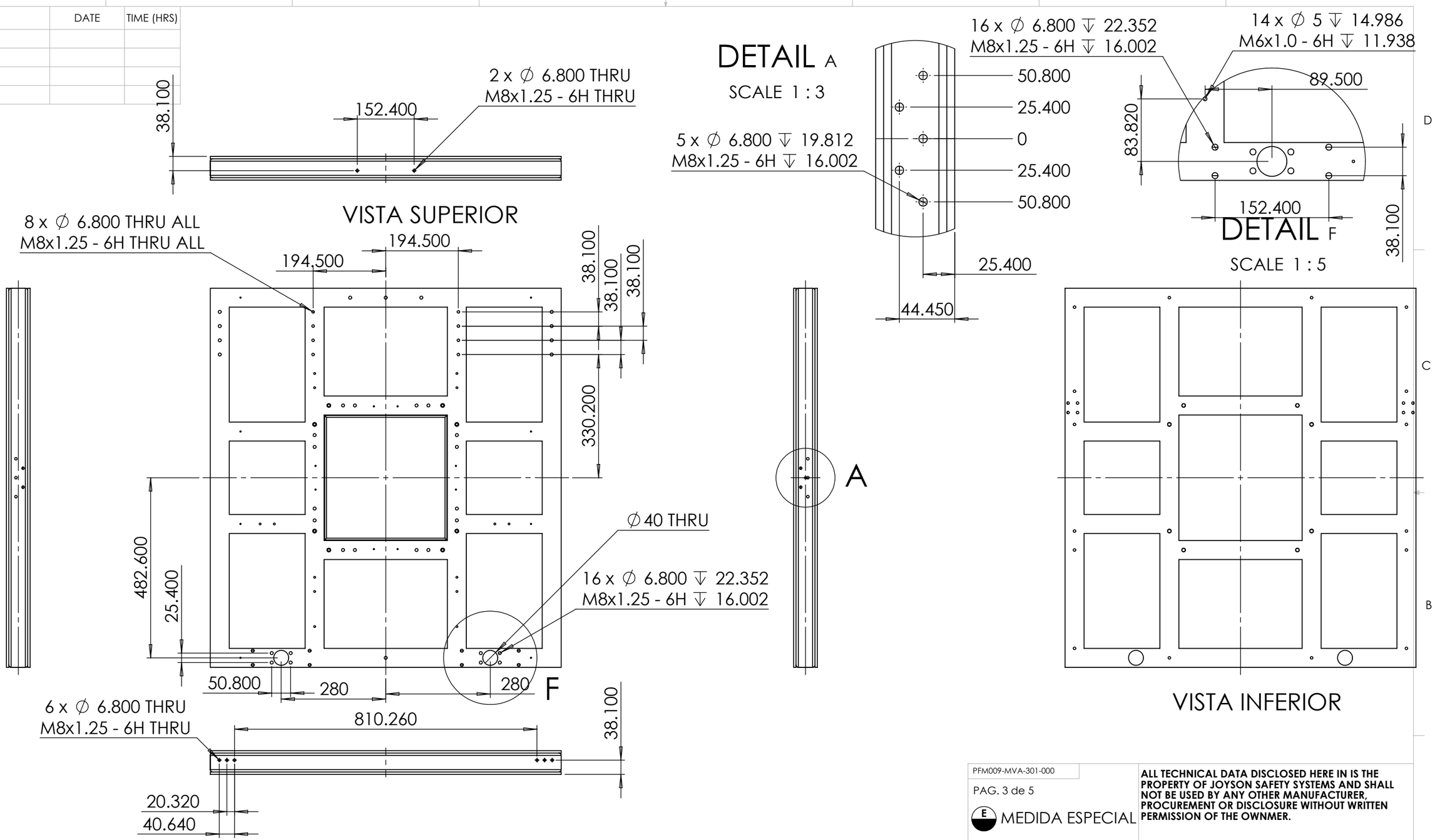


PFM009-MVA-301-000

PAG. 3 de 5

E MEDIDA ESPECIAL

**ALL TECHNICAL DATA DISCLOSED HERE IN IS THE PROPERTY OF JOYSON SAFETY SYSTEMS AND SHALL NOT BE USED BY ANY OTHER MANUFACTURER, PROCUREMENT OR DISCLOSURE WITHOUT WRITTEN PERMISSION OF THE OWNMER.**

JOYSON
EQUIPO AUTOMOTRIZ AMERICANA S.A. DE C.V.
BOLSAS DE AIRE
NOMBRE: RM
FIRMA:

AUTHORIZE | TALLER | QUALITY

**NOTES:**
Pieza libre de filos y rebabas.

| TOTAL OF PIECES | 1 Pza. |
|---|---|
| ANG. PROF | |

| REV | DESCRIPTION | DATE | APPROVED |
|---|---|---|---|
| | | | |
| | | | |
| | | | |

REVIEWS

UNLESS OTHERWISE SPECIFIED

| TOLERANCES DIMENSIONS | ISO 2768-1 mK-E ASME Y14.5M-1994 | |
|---|---|---|
| MM | INCHES | ANGLES |
| +.1 -.1 | +.004 -.004 | +1° -1° |

| | |
|---|---|
| MATERIAL: | 2x2" PTR - Cal. 1/4 |
| SURFACE TREATMENT | COLOR JOYSON |
| HARDNESS | N.A. |

JOYSON SAFETY SYSTEMS

| APPROVALS | | DATE |
|---|---|---|
| DESIGNER | ABG | 1/30/2022 |
| REVIEW | RVM | 1/30/2022 |

**JOYSON TECHNICAL CENTER**

| | | | |
|---|---|---|---|
| MODEL NAME | PFM009-MVA | SERIES No | M2022-003 |
| MACHINE NAME | QCF- VOVLO DAB | | |
| PART NUMBER | PFM009-MVA-301-000 | | |
| SIZE **B** | PART NAME NG UPPER FRAME | | REV. B |
| ESCALE: 1:10 | | DRAWING IN MILLIMETERS | |

JSSAM-JTC-MF-FM-0002-001

| NAME | DATE | TIME (HRS) |
|---|---|---|
| | | |
| | | |
| | | |
| | | |

E Respetar profundidades de roscas.

## VISTA SUPERIOR

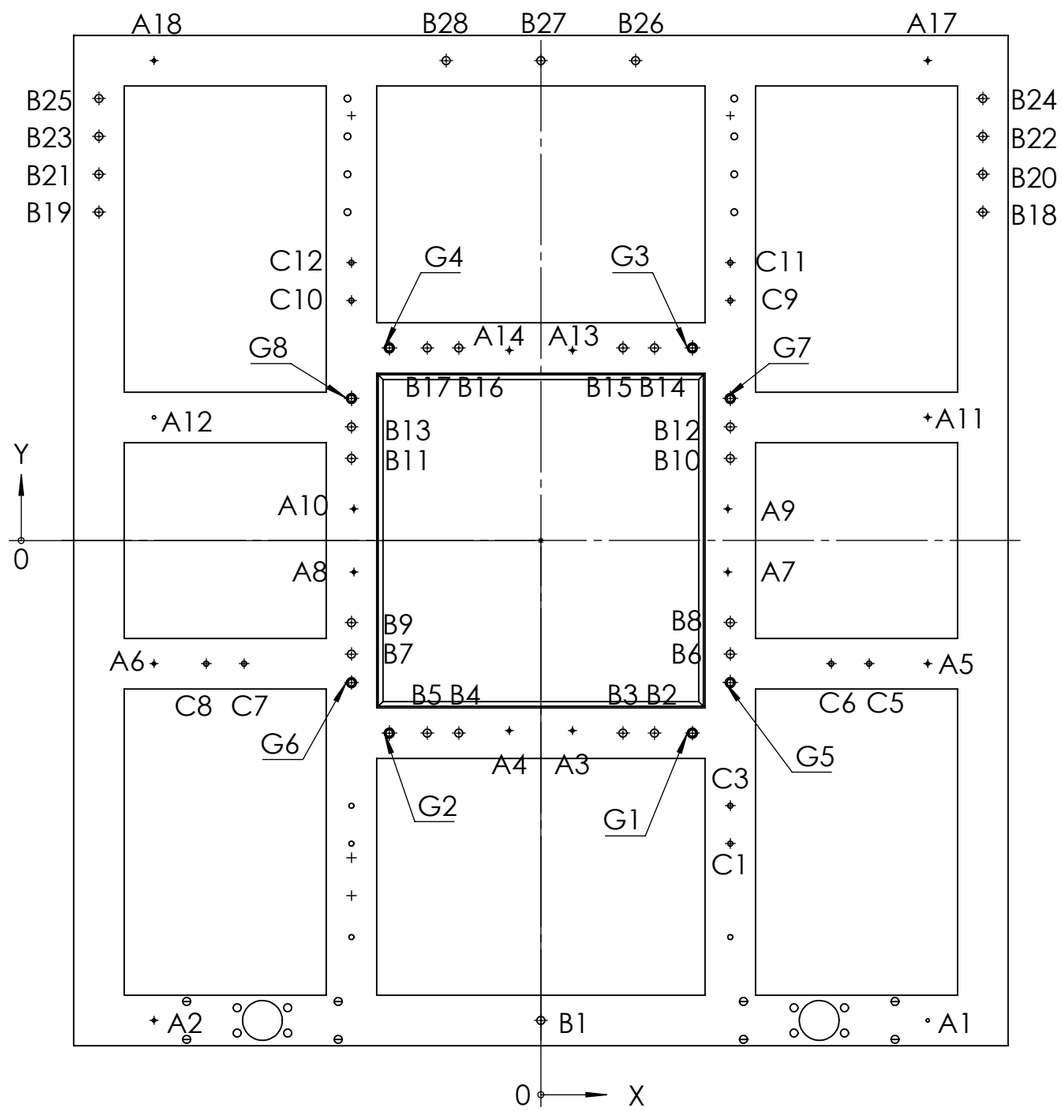


| TAG | X LOC | Y LOC | SIZE |
|---|---|---|---|
| A1 | 389.100 | -482.600 | ∅ 3.300 ↧ 10.160<br>M4x0.7 - 6H ↧ 7.874 |
| A2 | -389.100 | -482.600 | |
| A3 | 31.750 | -191.215 | |
| A4 | -31.750 | -191.215 | |
| A5 | 389.100 | -123.825 | |
| A6 | -389.100 | -123.825 | |
| A7 | 188.040 | -31.750 | |
| A8 | -188.040 | -31.750 | |
| A9 | 188.040 | 31.750 | |
| A10 | -188.040 | 31.750 | |
| A11 | 389.100 | 123.825 | |
| A12 | -389.100 | 123.825 | |
| A13 | 31.750 | 191.215 | |
| A14 | -31.750 | 191.215 | |
| A17 | 389.100 | 482.600 | |
| A18 | -389.100 | 482.600 | |
| B1 | 0 | -482.600 | ∅ 6.800 ↧ 19.812<br>M8x1.25 - 6H ↧ 16.002 |
| B2 | 114.300 | -193.675 | |
| B3 | 82.550 | -193.675 | |
| B4 | -82.550 | -193.675 | |
| B5 | -114.300 | -193.675 | |
| B6 | 190.500 | -114.300 | |
| B7 | -190.500 | -114.300 | |
| B8 | 190.500 | -82.550 | |
| B9 | -190.500 | -82.550 | |
| B10 | 190.500 | 82.550 | |
| B11 | -190.500 | 82.550 | |
| B12 | 190.500 | 114.300 | |
| B13 | -190.500 | 114.300 | |
| B14 | 114.300 | 193.675 | |
| B15 | 82.550 | 193.675 | |
| B16 | -82.550 | 193.675 | |
| B17 | -114.300 | 193.675 | |
| B18 | 444.500 | 330.200 | |

| TAG | X LOC | Y LOC | SIZE |
|---|---|---|---|
| B19 | -444.500 | 330.200 | |
| B20 | 444.500 | 368.300 | |
| B21 | -444.500 | 368.300 | |
| B22 | 444.500 | 406.400 | |
| B23 | -444.500 | 406.400 | |
| B24 | 444.500 | 444.500 | |
| B25 | -444.500 | 444.500 | |
| B26 | 95.250 | 482.600 | |
| B27 | 0 | 482.600 | |
| B28 | -95.250 | 482.600 | |
| C1 | 190.500 | -304.800 | ∅ 5 ↧ 14.986<br>M6x1.0 - 6H ↧ 11.938 |
| C3 | 190.500 | -266.700 | |
| C5 | 330.200 | -123.825 | |
| C6 | 292.100 | -123.825 | |
| C7 | -298.450 | -123.825 | |
| C8 | -336.550 | -123.825 | |
| C9 | 190.500 | 241.300 | |
| C10 | -190.500 | 241.300 | |
| C11 | 190.500 | 279.400 | |
| C12 | -190.500 | 279.400 | |
| G1 | 152.400 | -193.675 | ∅ 10 THRU ALL |
| G2 | -152.400 | -193.675 | |
| G3 | 152.400 | 193.675 | |
| G4 | -152.400 | 193.675 | |
| G5 | 190.500 | -142.875 | |
| G6 | -190.500 | -142.875 | |
| G7 | 190.500 | 142.875 | |
| G8 | -190.500 | 142.875 | |

PFM009-MVA-301-000

PAG. 4 de 5

E MEDIDA ESPECIAL

**ALL TECHNICAL DATA DISCLOSED HERE IN IS THE PROPERTY OF JOYSON SAFETY SYSTEMS AND SHALL NOT BE USED BY ANY OTHER MANUFACTURER, PROCUREMENT OR DISCLOSURE WITHOUT WRITTEN PERMISSION OF THE OWNMER.**

JOYSON
EQUIPO AUTOMOTRIZ AMERICANA S.A. DE C.V.
BOLSAS DE AIRE
NOMBRE: RM
FIRMA:

AUTHORIZE | TALLER | QUALITY

**NOTES:**
Pieza libre de filos y rebabas.

TOTAL OF PIECES: 1 Pza.
ANG. PROF

| REV | DESCRIPTION | DATE | APPROVED |
|---|---|---|---|
| | | | |

REVIEWS

UNLESS OTHERWISE SPECIFIED

| TOLERANCES DIMENSIONS | ISO 2768-1 mK-E ASME Y14.5M-1994 | |
|---|---|---|
| MM | INCHES | ANGLES |
| +.1 -.1 | +.004 -.004 | +1° -1° |

MATERIAL: 2x2" PTR - Cal. 1/4
SURFACE TREATMENT: COLOR JOYSON
HARDNESS: N.A.

JOYSON SAFETY SYSTEMS

| APPROVALS | | DATE |
|---|---|---|
| DESIGNER | ABG | 1/30/2022 |
| REVIEW | RVM | 1/30/2022 |

**JOYSON TECHNICAL CENTER**

| | | | |
|---|---|---|---|
| MODEL NAME | PFM009-MVA | SERIES No | M2022-003 |
| MACHINE NAME | QCF- VOVLO DAB | | |
| PART NUMBER | PFM009-MVA-301-000 | | |
| SIZE: B | PART NAME: NG UPPER FRAME | | REV. B |
| ESCALE: 1:6 | | DRAWING IN MILLIMETERS | |

JSSAM-JTC-MF-FM-0002-001

| NAME | DATE | TIME (HRS) |
|---|---|---|
| | | |
| | | |
| | | |
| | | |

# VISTA INFERIOR

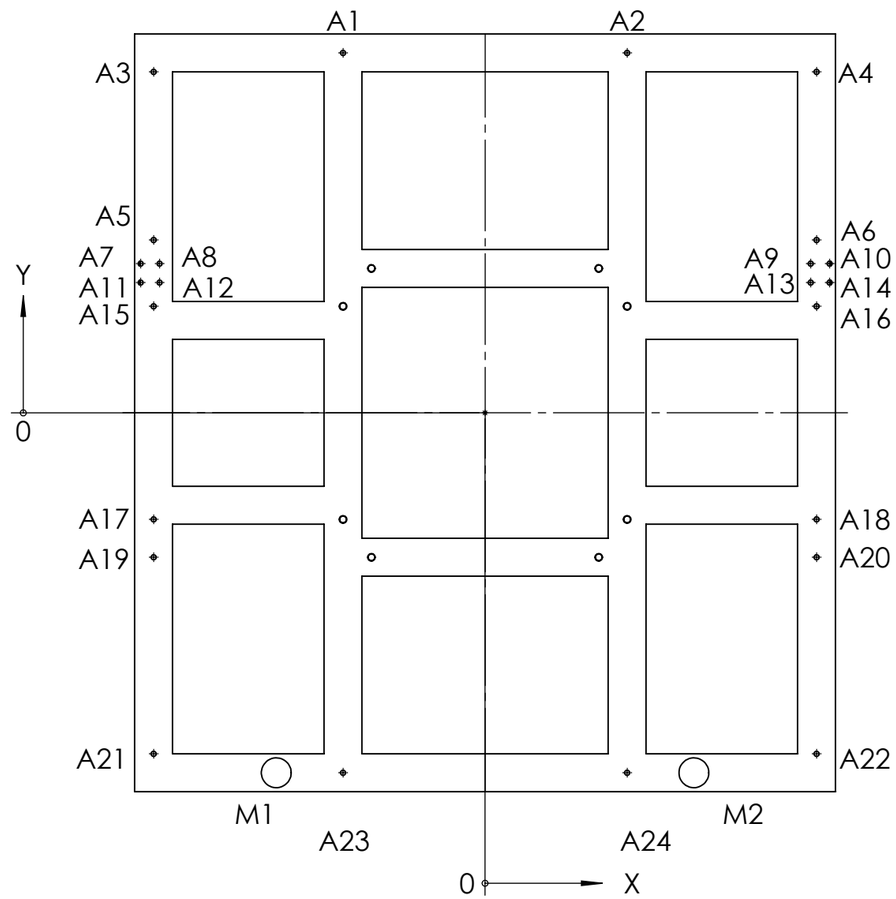


| TAG | X LOC | Y LOC | SIZE |
|---|---|---|---|
| A1 | -190.500 | 482.600 | ∅ 6.800 ↧ 19.812<br>M8x1.25 - 6H ↧ 16.002 |
| A2 | 190.500 | 482.600 | |
| A3 | -444.500 | 457.200 | |
| A4 | 444.500 | 457.200 | |
| A5 | -444.500 | 231.775 | |
| A6 | 444.500 | 231.775 | |
| A7 | -461.963 | 200.025 | |
| A8 | -436.563 | 200.025 | |
| A9 | 436.563 | 200.025 | |
| A10 | 461.963 | 200.025 | |
| A11 | -461.963 | 174.625 | |
| A12 | -436.563 | 174.625 | |
| A13 | 436.563 | 174.625 | |
| A14 | 461.963 | 174.625 | |
| A15 | -444.500 | 142.875 | |
| A16 | 444.500 | 142.875 | |
| A17 | -444.500 | -142.875 | |
| A18 | 444.500 | -142.875 | |
| A19 | -444.500 | -193.675 | |
| A20 | 444.500 | -193.675 | |
| A21 | -444.500 | -457.200 | |
| A22 | 444.500 | -457.200 | |
| A23 | -190.500 | -482.600 | |
| A24 | 190.500 | -482.600 | |
| M1 | -280 | -482.600 | ∅ 40 THRU |
| M2 | 280 | -482.600 | ∅ 40 THRU |

PFM009-MVA-301-000

PAG. 5 de 5

E MEDIDA ESPECIAL

**ALL TECHNICAL DATA DISCLOSED HERE IN IS THE PROPERTY OF JOYSON SAFETY SYSTEMS AND SHALL NOT BE USED BY ANY OTHER MANUFACTURER, PROCUREMENT OR DISCLOSURE WITHOUT WRITTEN PERMISSION OF THE OWNMER.**

JOYSON
EQUIPO AUTOMOTRIZ AMERICANA S.A. DE C.V.
BOLSAS DE AIRE
NOMBRE: RM
FIRMA:

AUTHORIZE | TALLER | QUALITY

**NOTES:**
Pieza libre de filos y rebabas.

| TOTAL OF PIECES | 1 Pza. |
|---|---|
| ANG. PROF | |

| REV | DESCRIPTION | DATE | APPROVED |
|---|---|---|---|
| | | | |
| | | | |
| | | | |

REVIEWS

UNLESS OTHERWISE SPECIFIED

| TOLERANCES DIMENSIONS | ISO 2768-1 mK-E ASME Y14.5M-1994 | |
|---|---|---|
| MM | INCHES | ANGLES |
| +.1 -.1 | +.004 -.004 | +1° -1° |

MATERIAL: 2x2" PTR - Cal. 1/4

SURFACE TREATMENT: COLOR JOYSON

HARDNESS: N.A.

JOYSON SAFETY SYSTEMS

| APPROVALS | | DATE |
|---|---|---|
| DESIGNER | ABG | 1/30/2022 |
| REVIEW | RVM | 1/30/2022 |

**JOYSON TECHNICAL CENTER**

| | | | |
|---|---|---|---|
| MODEL NAME | PFM009-MVA | SERIES No | M2022-003 |
| MACHINE NAME | QCF- VOVLO DAB | | |
| PART NUMBER | PFM009-MVA-301-000 | | |
| SIZE | PART NAME | | REV. |
| B | NG UPPER FRAME | | B |
| ESCALE: 1:8 | | DRAWING IN MILLIMETERS | |

JSSAM-JTC-MF-FM-0002-001