NAME	DATE	TIME (HRS)

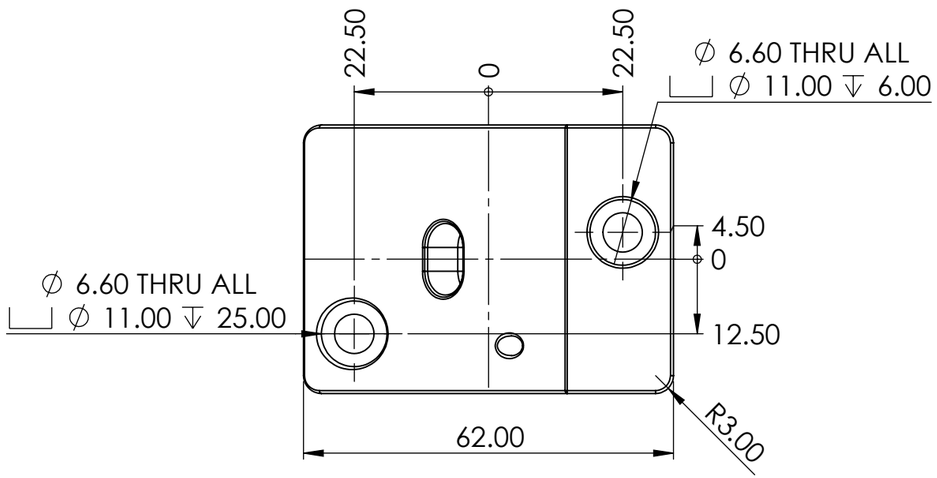

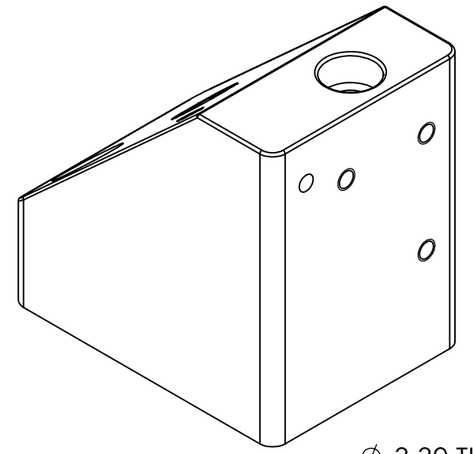

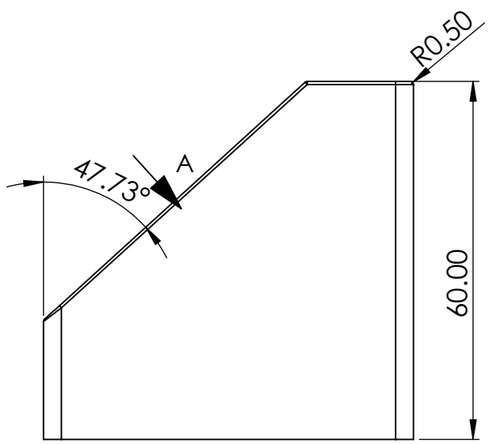

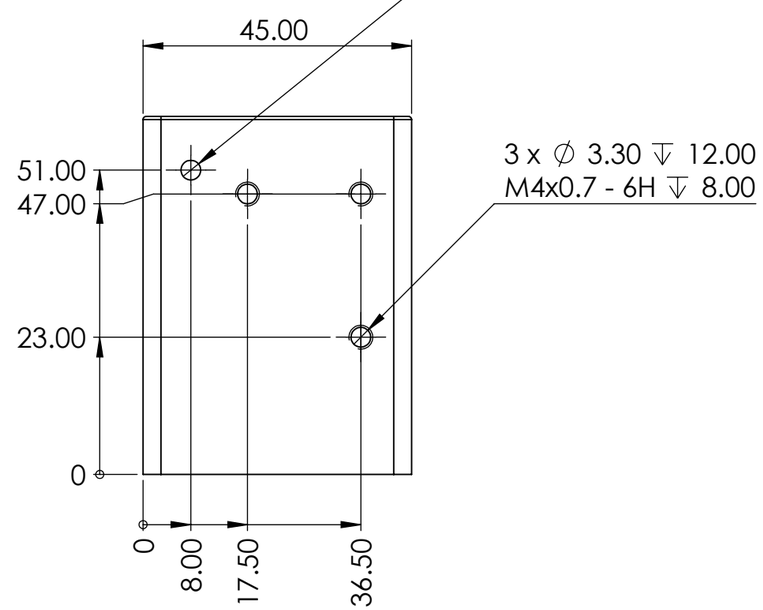

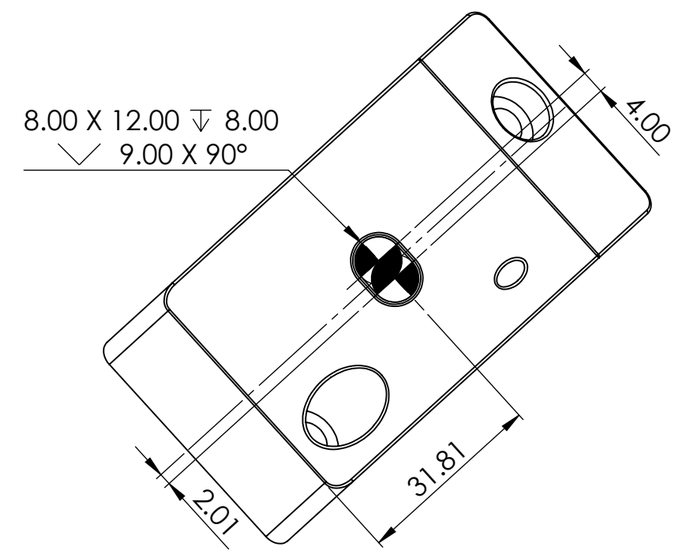

VIEW A

WGB001-AC-301-003

PAG. 1 de 1

MEDIDA ESPECIAL

ALL TECHNICAL DATA DISCLOSED HERE IN IS THE PROPERTY OF JOYSON SAFETY SYSTEMS AND SHALL NOT BE USED BY ANY OTHER MANUFACTURER, PROCUREMENT OR DISCLOSURE WITHOUT WRITTEN PERMISSION OF THE OWNMER.

JOYSON
EQUIPO AUTOMOTRIZ AMERICANA S.A. DE C.V.
BOLSAS DE AIRE
NOMBRE: RM
FIRMA:

AUTHORIZE | TALLER | QUALITY

NOTES:
Pieza libre de filos y rebabas.

REV	DESCRIPTION	DATE	APPROVED

REVIEWS

TOTAL OF PIECES: 1 Pza.
ANG. PROF

UNLESS OTHERWISE SPECIFIED
TOLERANCES DIMENSIONS: ISO 2768-1 mK-E ASME Y14.5M-1994

MM	INCHES	ANGLES
+.1 -.1	+.004 -.004	+1° -1°

MATERIAL: D2 Steel
SURFACE TREATMENT: Pavonado
HARDNESS: HRC 50-55

JOYSON SAFETY SYSTEMS

APPROVALS		DATE
DESIGNER	ABG	7/10/2021
REVIEW	RVM	7/10/2021

JOYSON TECHNICAL CENTER

MODEL NAME	M2021-069	SERIES No	WGB001-AC
MACHINE NAME	WING GUARD BEV3 L233		
PART NUMBER	WGB001-AC-301-003		
SIZE **B**	PART NAME WGB001-AC-301-003		REV. **A**
ESCALE: 1:1		DRAWING IN MILLIMETERS	

JSSAM-JTC-MF-FM-0002