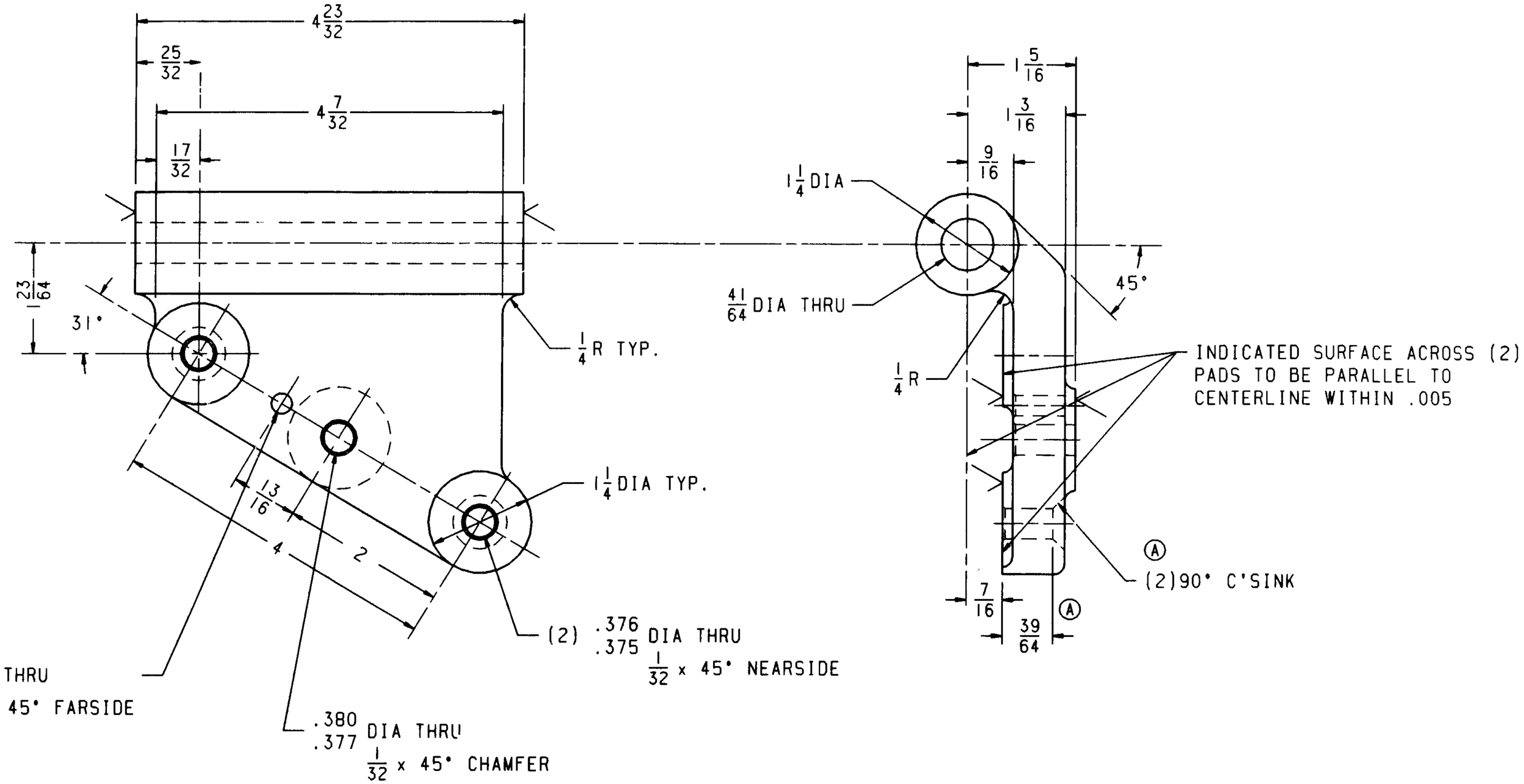

NOTE:
CAST CORNERS AND FILLETS TO BE 1/8 UNLESS OTHERWISE NOTED

USED ON ASSEMBLY NO. OIS-01384

"INFORMATION CONTAINED HEREIN CONSTITUTES PROPRIETARY CONFIDENTIAL INFORMATION OF OWENS-ILLINOIS, AND IS ACCEPTED ONLY SUBJECT TO THAT UNDERSTANDING. IT IS TO BE KEPT CONFIDENTIAL AND NOT COPIED, USED, OR CONVEYED TO OTHERS WITHOUT OWENS-ILLINOIS' WRITTEN AUTHORIZATION."

A	1-13-94
CHANGES	

UNLESS SPECIFIED:
FINISHED SURFACE ROUGHNESS 125
FINISHED DIMENSIONS-FRACTIONAL ±.015
DECIMAL ±.005
BREAK SHARP EDGES
MARK PART NUMBER AT X

NAME DEFLECTOR CLAMP PLATE

DRAWN	CHECKED	DATE	SCALE
AWR		10-27-93	FULL

MATERIAL 356-T6 CAST ALUMINUM

OWENS-BROCKWAY
GLASS CONTAINERS, a unit of Owens-Illinois OI
DRAWING NUMBER
OIS-108-1799

OWENS-BROCKWAY
GLASS CONTAINERS, A UNIT OF OWENS-ILLINOIS OI

TYPE
1 - PATTERN
2 - MATERIAL
3 - DIMENSION
4 - FINISH
5 - CORRECTION
6 - PARTS LIST
7 - COMBINATION
8 - OTHER

EFFECTIVITY
F - NEXT MANUFACTURED LOT
P - IN PROCESS
UP TO AFFECTED OPERATION + 'F'
U - UNASSEMBLED PARTS - IN PROCESS, STORES, ASSEMBLY FLOOR + 'P'
A-- PARTS IN ASSEMBLIES + 'U'
T - PARTS OR ASSEMBLIES IN MACHINES + 'A'
S - SPECIAL INSTRUCTIONS
FOR HAND PARTS, MACHINE NO. 'S, ETC.
R - RECORD ONLY

FRAME NO.
CODE
T 5 E P

DRAWING NUMBER OIS-108-1799
CHANGE LETTER A
CHANGED BY AWR
CHANGE DESCRIPTION & REASON:
(2) 1/32 x 45° CHAMFER REPLACED BY 90° C'SINK @ 39/64