NAME	DATE	TIME (HRS)

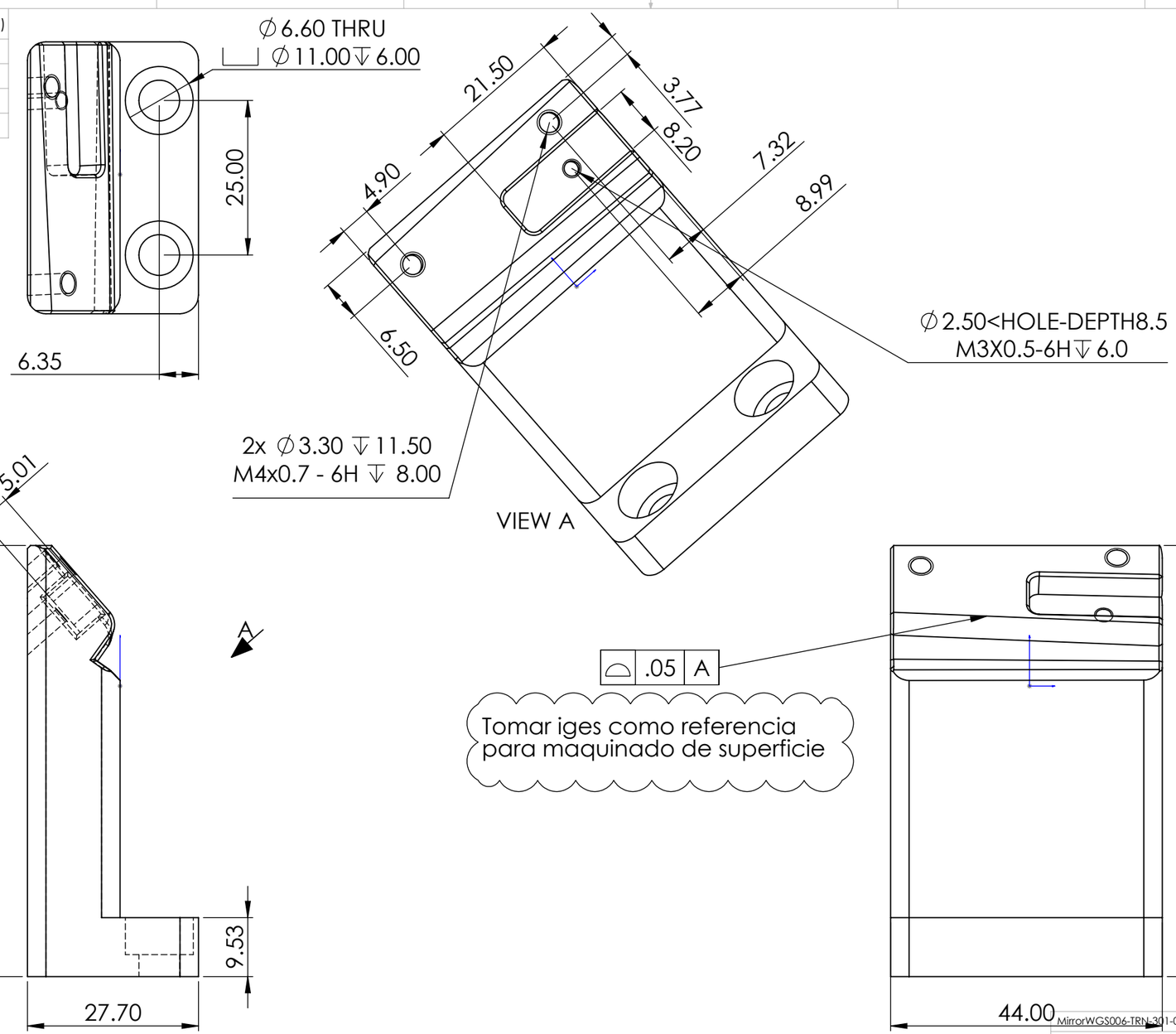

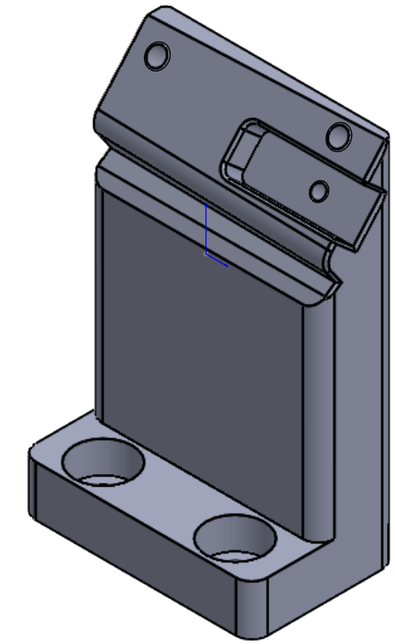

MirrorWGS006-TRN-301-029

PAG. 1 de 1

E MEDIDA ESPECIAL

ALL TECHNICAL DATA DISCLOSED HERE IN IS THE PROPERTY OF JOYSON SAFETY SYSTEMS AND SHALL NOT BE USED BY ANY OTHER MANUFACTURER, PROCUREMENT OR DISCLOSURE WITHOUT WRITTEN PERMISSION OF THE OWNMER.

AUTHORIZE	TALLER	QUALITY

NOTES:
Pieza libre de filos y rebabas.

REV	DESCRIPTION	DATE	APPROVED

REVIEWS

TOTAL OF PIECES: 1 Pza.
ANG. PROF

UNLESS OTHERWISE SPECIFIED

TOLERANCES DIMENSIONS	ISO 2768-1 mK-E ASME Y14.5M-1994	
MM	INCHES	ANGLES
+.1 -.1	+.004 -.004	+1° -1°

MATERIAL: SS304
SURFACE TREATMENT: Pulido
HARDNESS: N.A.

JOYSON SAFETY SYSTEMS

APPROVALS		DATE
DESIGNER	ABG	7/6/2022
REVIEW	EGD	7/6/2022

JOYSON TECHNICAL CENTER

MODEL NAME	WGS006-TRN	SERIES No	M2022-102
MACHINE NAME	WING WARD Sencilla # 2		
PART NUMBER	MirrorWGS006-TRN-301-029		
SIZE **B**	PART NAME		REV. **A**
ESCALE: 5:4		DRAWING IN MILLIMETERS	

JSSAM-JTC-MF-FM-0002-001