NAME	DATE	TIME (HRS)

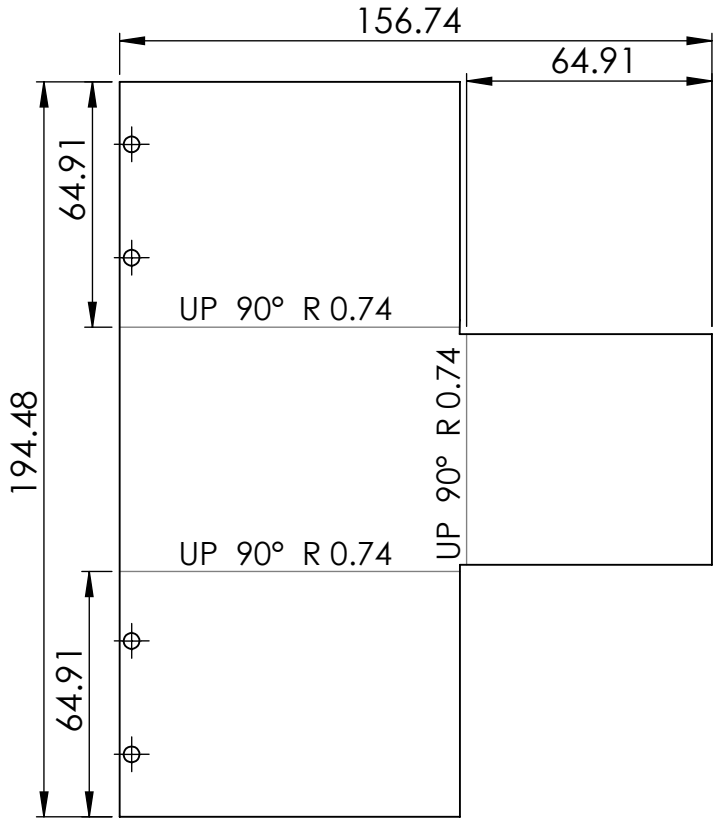

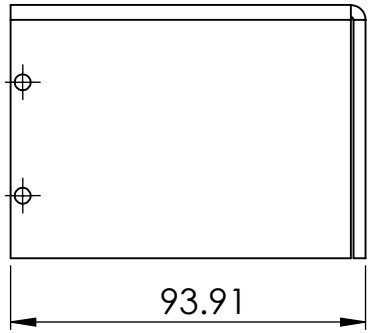

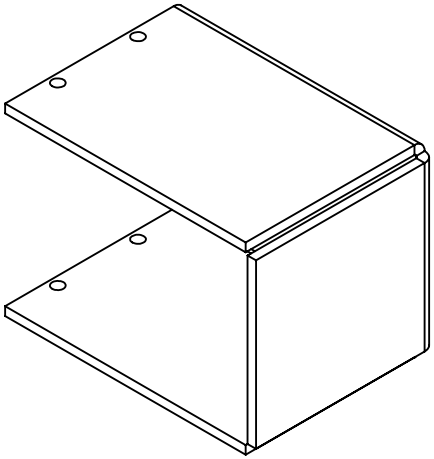

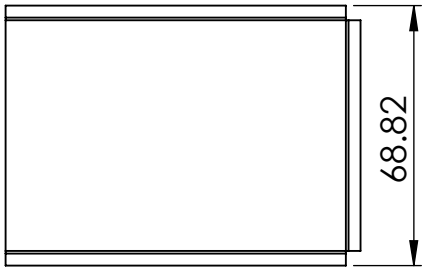

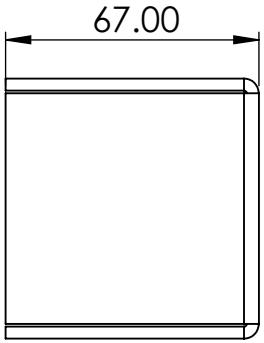

QUALITY

AUTHORIZE	TALLER

NOTES:
Pieza libre de filos y rebabas.

TOTAL OF PIECES	1 Pza.
ANG. PRO	

REV	DESCRIPTION	DATE	APPROVED

REVIEWS

UNLESS OTHERWISE SPECIFIED

TOLERANCES DIMENSIONS ISO 2768-1 mK-E ASME Y14.5M-1994

MM	INCHES	ANGLES
+.1 -.1	+.004 -.004	+1°-1°

MATERIAL: SS304

SURFACE TREATMENT: Pulido

HARDNESS: N.A.

PAG. 1 de 1

MEDIDA ESPECIAL

JOYSON SAFETY SYSTEMS

APPROVALS		DATE
DESIGNER	ABG	7/8/2021
REVIEW	RVM	7/8/2021

ALL TECHNICAL DATA DISCLOSED HERE IN IS THE PROPERTY OF JOYSON SAFETY SYSTEMS AND SHALL NOT BE USED BY ANY OTHER MANUFACTURER, PROCUREMENT OR DISCLOSURE WITHOUT WRITTEN PERMISSION OF THE OWNMER.

JOYSON TECHNICAL CENTER

MODEL NAME: SERIES No

MACHINE NAME:

PART NUMBER: WGB001-AC-400-017

SIZE	PART NAME	REV.
A		A

ESCALE 1:2 **DRAWING IN** MILLIMETERS

JSSAM-JTC-MF-FM-0002