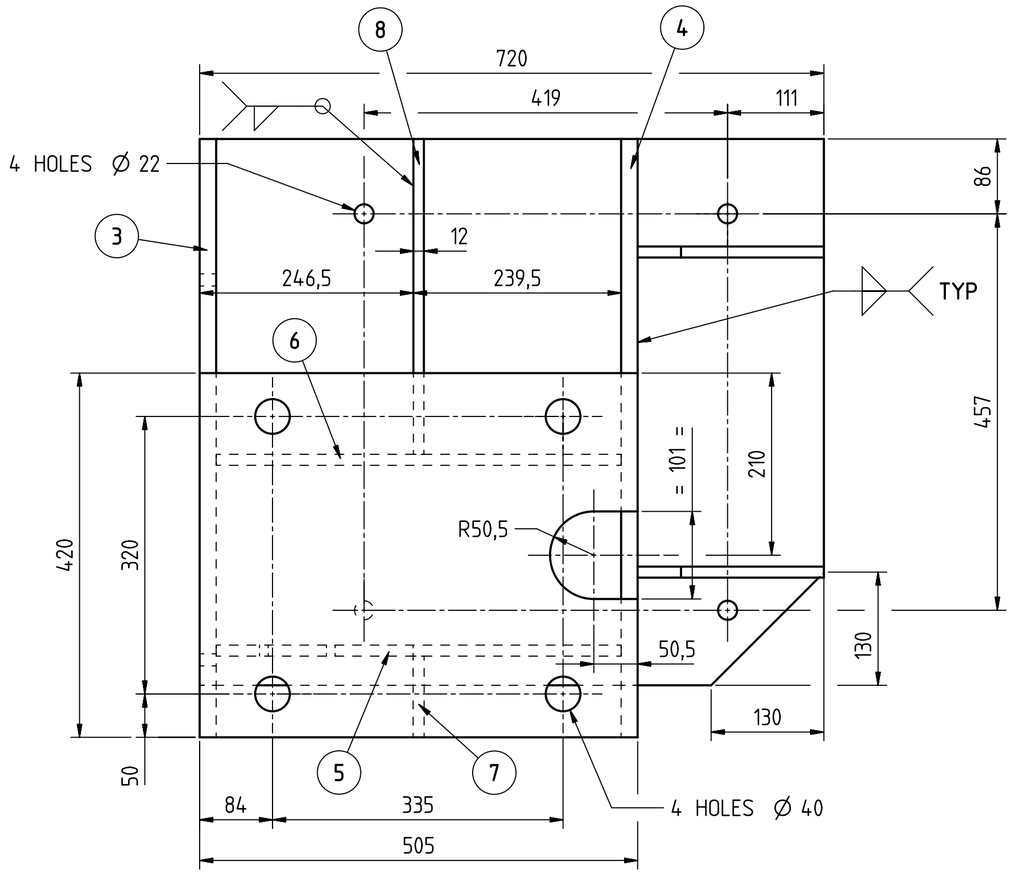

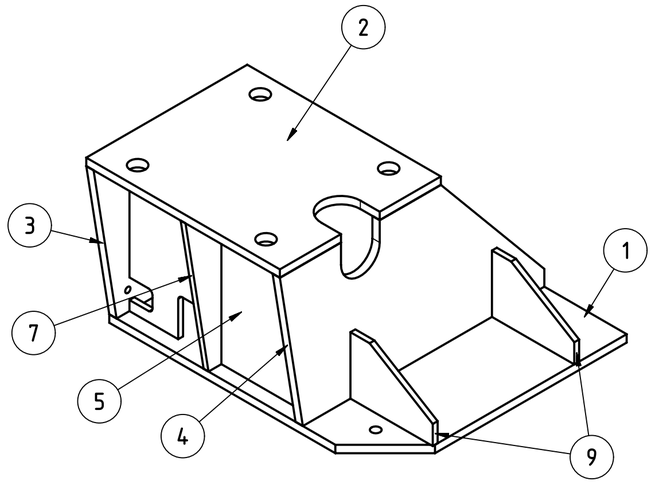

SCALE 1:8

ITEM	QTY	DESCRIPTION	REMARKS
1	1	PLATE 3/4" THK 630 X 720	
2	1	PLATE 3/4" THK 420 X 505	
3	1	PLATE 3/4" THK 365 X 690	
4	1	PLATE 3/4" THK 365 X 690	CUT AS SHOWN
5	1	PLATE 1/2" THK 365 X 467	CUT AS SHOWN
6	1	PLATE 1/2" THK 365 X 467	
7	1	PLATE 1/2" THK 94 X 365	
8	1	PLATE 1/2" THK 364 X 365	
9	2	PLATE 1/2" THK 215 X 150	

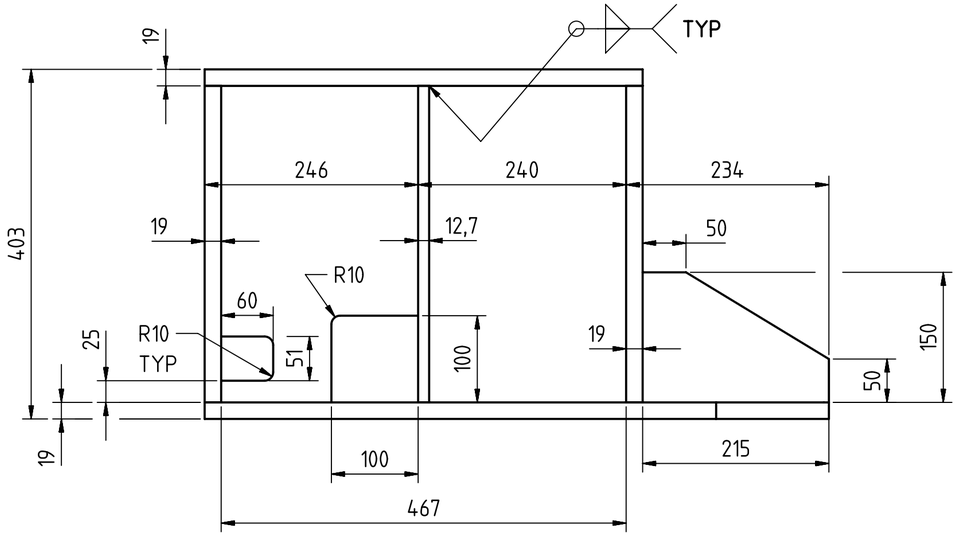

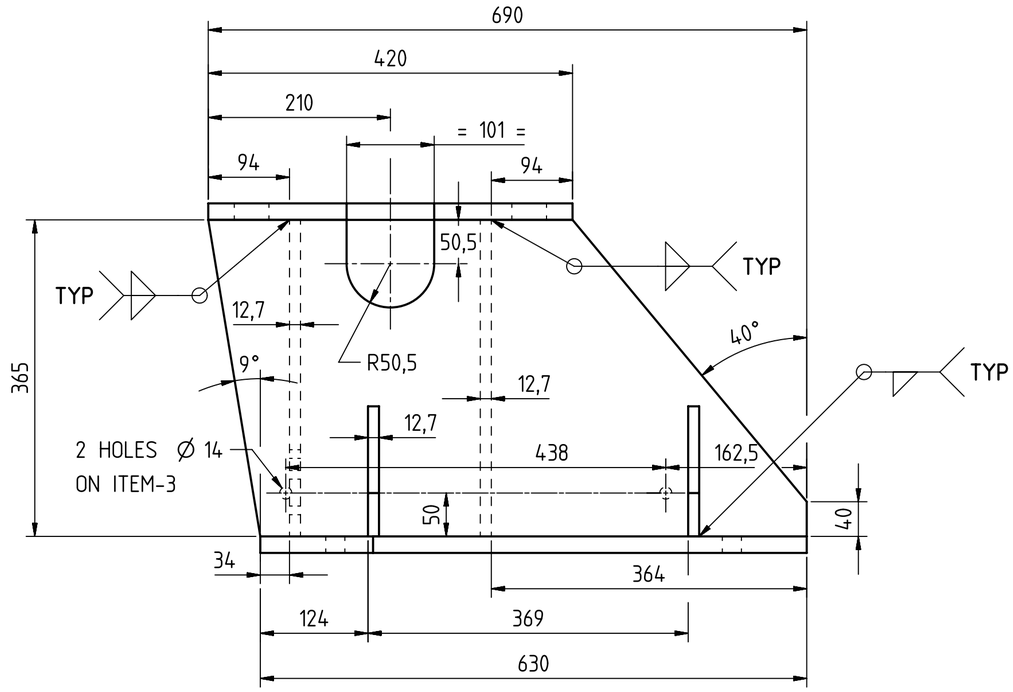

NOTES:
1. MEASUREMENTS IN MILLIMETERS EXCEPT AS INDICATED.
2. APPROXIMATE TOTAL WEIGHT 202Kg.
3. ENCUMBRANCE 690 X 720 X 403 mm.
4. ALL WELDS TO BE 6mm CONTINUOUS FILLET, UNLESS OTHERWISE SPECIFIED, TO SEAL ALL OVER AND CONFORM TO WELDING CODE - ISO 5817 QUALITY GRADE B.
5. ALL WELDS TO BE EXAMINED IN ACCORDANCE WITH ISO 17635 VT p20.
6. REMOVE ALL BURRS AND SHARP EDGES.

REV	DESCRIPTION	DATE	REF NO	BY	CHK
3					
2					
1					
0					

FOR LIMITS OF UNTOLERANCED DIMENSIONS REFER TO DRG. A4-15895.

OFFICE OF ORIGIN : SAO PAULO

DESIGN TEAM : REGIONAL ENGINEERING

Copyright © Weir do Brasil Ltda. 2022
Weir do Brasil Ltda ("the Company") is the owner of the copyright and all confidential information in this drawing.
The drawing must not be copied in whole or in part, in any form or by any means, and the information in it must not be disclosed to any person, or used for any purpose other than the specific purpose for which it has been provided, without the prior written consent of the Company.

SCALE: 1:5
APP: -
CHK: -
DRN: NITHYA
DATE: 25JAN2022
SHEET 1 OF 1

PRODUCT
WARMAN®
Centrifugal Slurry Pumps

WEIR Minerals

TITLE
BASE SUPPORT
PUMP 6 X 4 RAHPP

SHEET SIZE	DRAWING No	REVISION
A2	WM211891301001	0