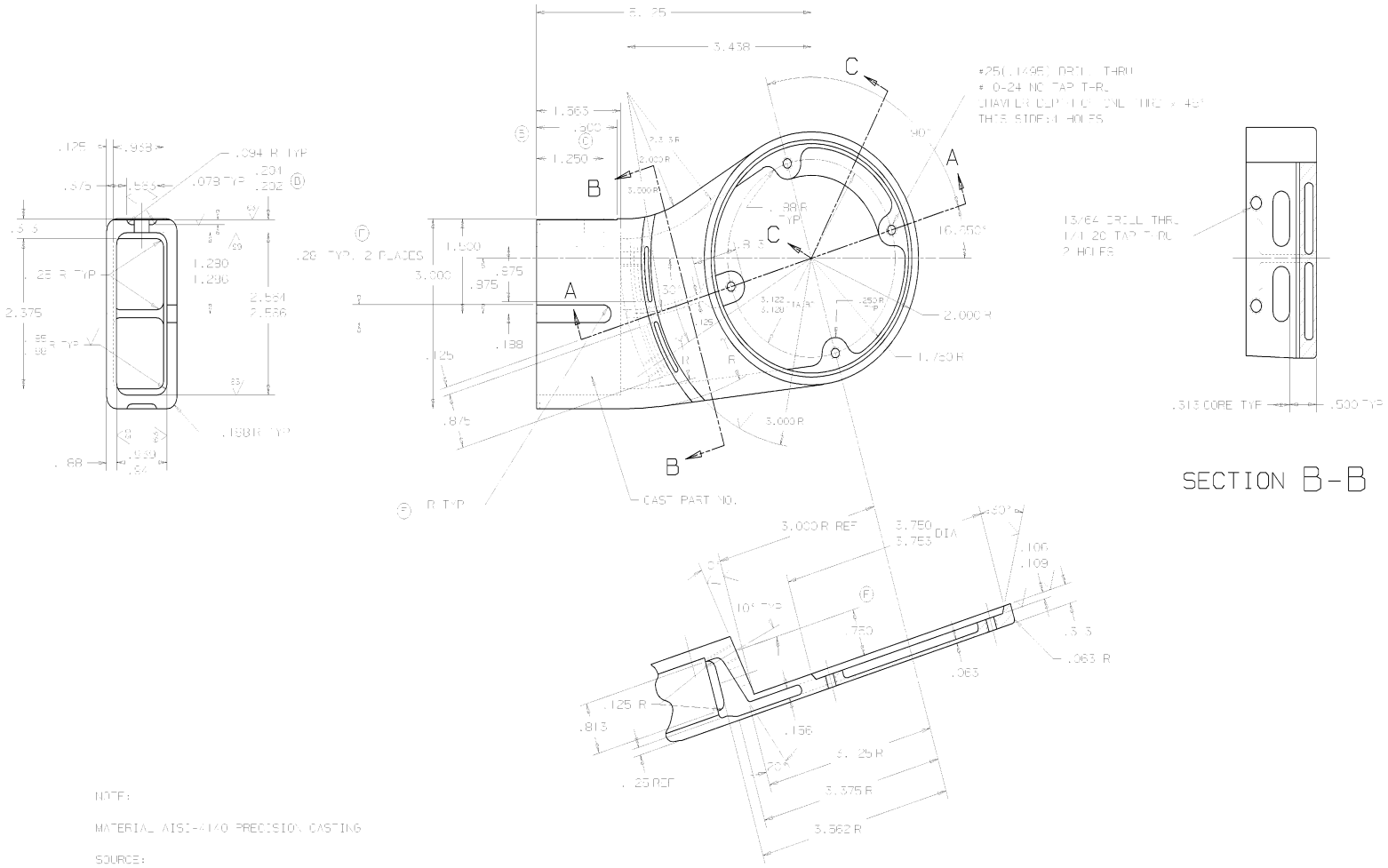

NOTE:

MATERIAL AISI-4140 PRECISION CASTING

SOURCE:
EUTECTIC ENGINEERING CO.
DETROIT, MICHIGAN

CASTING MUST BE PRESSURE TIGHT AT 30 PSI

STRESS RELIEVE BEFORE MACHINING

ALL CAST RADII & FILLETS TO BE .063 R
UNLESS OTHERWISE SPECIFIED

REMOVE ALL SHARP EDGES

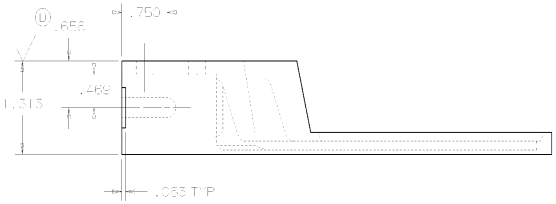

F	REPLACED (3) 9/32-40 EB WITH 2 SLOTS	JFB	11/14
E	ADD .750 DIMENSION	DFS	3/96
D	ADDED .656 DIM AND FINISH MARK	JFB	7/95
C	.800 DIMENSION WAS 1.375	JFB	6/97
B	REDRAWN ON CAD WITH REVISIONS	JFB	9/93
A	DRWG NO. WAS EX-306-7E	JFB	4/95
	REVISIONS	BY	DATE

REQ'D	MATERIAL
1 PER HEAD	SEE MATERIAL NOTE

DESIGN		HEAT	
DRAWN	JFB	10/83	DATE LTR 11/6/14

HE-0687
PART NUMBER HE-0624
REPLACE THE PART NUMBER ON THE ASSEMBLY WITH THE NEW PART NUMBER

UNLESS OTHERWISE SPECIFIED
DIMENSIONS IN INCHES
CHAMFER BORED & REAMED HOLES
.02 x 45° ON 1/16 DIA.
.04 x 45° ON 1/8 DIA.
TAPPED HOLES TO DEPTH OF HOLE TIDIC
SURFACE ROUGHNESS NOT TO EXCEED
125
GROUND SURFACES

Libbey CORPORATE OFFICES TOLEDO, OHIO

OFFSET TAKEOUT ARM PLATEN (QUICK CHANGE)

TAKEOUT ARM ASSEMBLY (QUICK CHANGE)

SCALE: 12"=1'-0" | SIZE D | DRAWING NUMBER HE-8695

D HE-8695

0 1 2 3

NOTICE

INFORMATION CONTAINED HEREIN CONSTITUTES PROPRIETARY CONFIDENTIAL INFORMATION OF LIBBEY, INC., AND IS TO BE ACCEPTED ONLY UNDER THE FOLLOWING CONDITIONS: IT IS TO BE KEPT CONFIDENTIAL AND NOT TO BE DISCLOSED, USED, OR REPRODUCED WITHOUT THE EXPRESSED WRITTEN CONSENT OF LIBBEY, INC.