THE CONTENTS OF THIS DOCUMENT ARE PROPRIETARY TO ARISTA NETWORKS, INC., ISSUED IN STRICT CONFIDENCE AND SHALL NOT BE DISCLOSED TO OTHERS OR USED FOR PURPOSES OTHER THAN INTENDED WITHOUT THE WRITTEN APPROVAL OF ARISTA NETWORKS, INC.

REVISIONS

REV	BY	DESCRIPTION	DATE
A0	TK	INITIAL RELEASE;ADDED LEAD IN CHAMFER	05/29/20

NOTES: UNLESS OTHERWISE SPECIFIED

1. INTERPRET ALL DIMENSIONS AND TOLERANCES PER ANSI Y14.5M.
   TOLERANCES: .XX +/- .13
   HOLE TO HOLE: .XX +/- .05
2. MATERIAL: 6061-T6 ALUMINUM.
3. FINISH: ANODIZE IN ACCORDANCE WITH MIL-A-8625 (LATEST VERSION), TYPE II, CLASS I, CLEAR.
4. REMOVE ALL BURRS AND SHARP EDGES.
5. THIS DRAWING PLUS ASSOCIATED CAD FILE TOGETHER DEFINE PART REQUIREMENTS.
6. PART(S) TO BE BAGGED AND TAGGED WITH THE REQUIRED INFORMATION.
   A. ARISTA NETWORKS PART NUMBER AND REVISION
   B. DATE CODE OR LOT CODE
   C. MANUFACTURER ID
   D. COUNTRY OF ORIGIN
7. MUST MEET THE REQUIREMENTS OF DIRECTIVE 2011/65/EU OF THE EUROPEAN PARLIAMENT AND OF THE COUNCIL OF 8 JUNE 2011 ON THE RESTRICTION OF THE USE OF CERTAIN HAZARDOUS SUBSTANCES IN ELECTRICAL AND ELECTRONIC EQUIPMENT (ROHS2 DIRECTIVE).
8. MUST MEET THE REQUIREMENTS OF EUROPEAN COMMUNITY REGULATION EC 1907/2006 ON CHEMICALS AND THEIR SAFE USE (REACH DIRECTIVE).

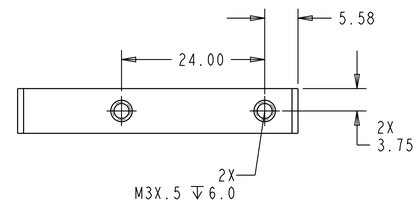

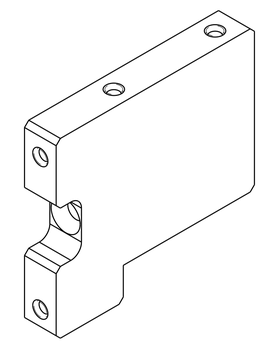

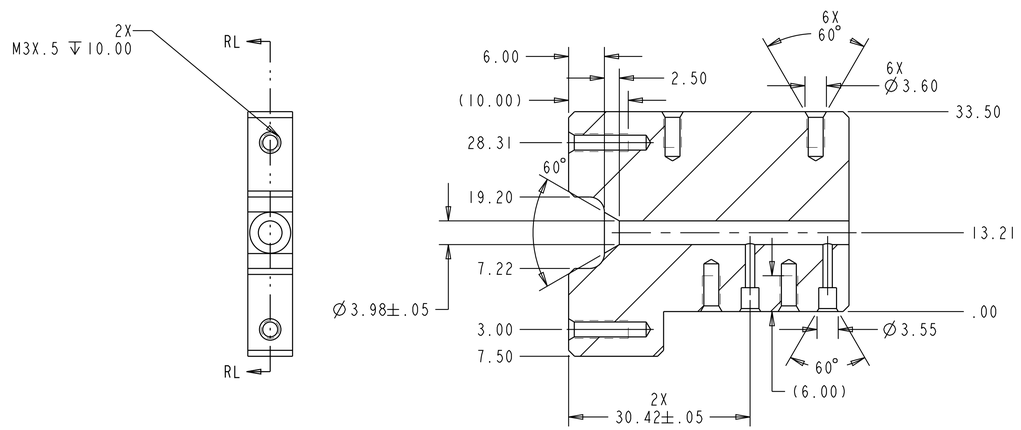

SECTION RL-RL

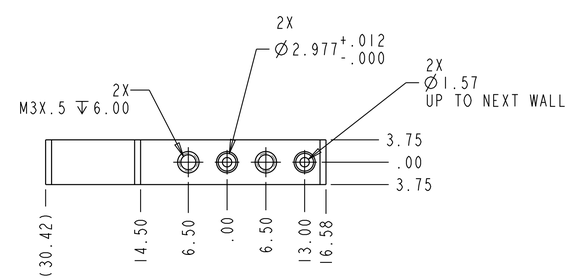

DIMENSIONS ARE IN MILLIMETERS UNLESS OTHERWISE SPECIFIED

THIRD ANGLE PROJECTION

ARISTA

TITLE
MECH,HORSESHOE LAKE TC,INTERPOSER ALIGNMENT BLOCK

Pro/E PART FILE: DN_HSL_CON_ALGN_BLCK
Pro/E DRW FILE: DN_HSL_CON_ALGN_BLCK

SIZE	SCALE	SHEET	DRAWING NO.	REV
D	2.00	1 OF 1	MECH-02114-03	A0