NAME	DATE	TIME (HRS)

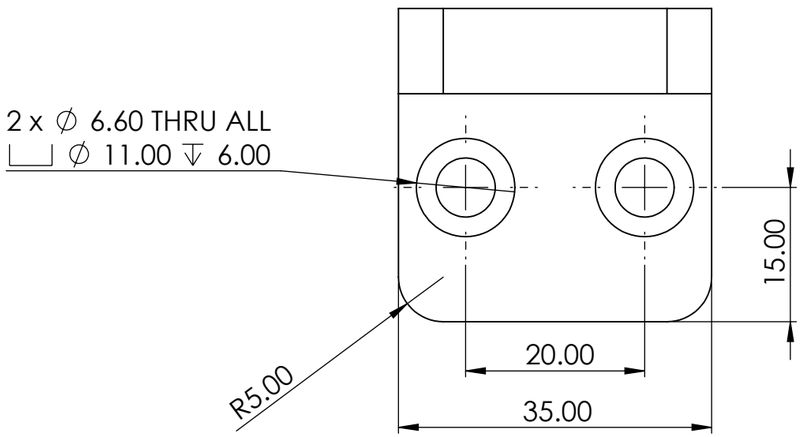

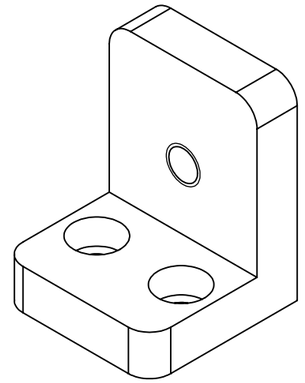

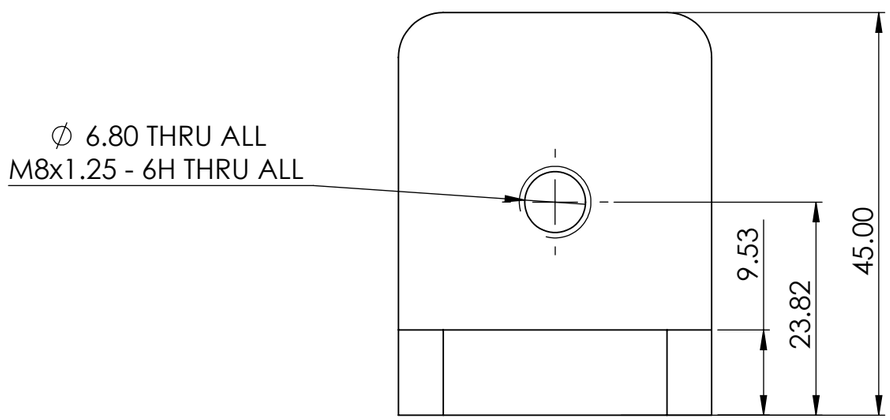

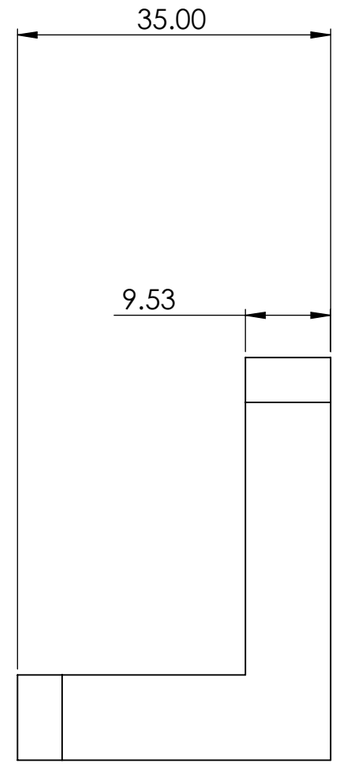

WGS001-TRN-102-017

PAG. 1 de 1

MEDIDA ESPECIAL

ALL TECHNICAL DATA DISCLOSED HERE IN IS THE PROPERTY OF JOYSON SAFETY SYSTEMS AND SHALL NOT BE USED BY ANY OTHER MANUFACTURER, PROCUREMENT OR DISCLOSURE WITHOUT WRITTEN PERMISSION OF THE OWNMER.

AUTHORIZE	TALLER	QUALITY

NOTES:

Pieza libre de filos y rebabas.

TOTAL OF PIECES	4 Pza.
ANG. PROF	

REV	DESCRIPTION	DATE	APPROVED

REVIEWS

UNLESS OTHERWISE SPECIFIED

TOLERANCES DIMENSIONS	ISO 2768-1 mK-E ASME Y14.5M-1994	
MM	INCHES	ANGLES
+.1 -.1	+.004 -.004	+1° -1°

MATERIAL:	1018 Cold Rolled
SURFACE TREATMENT	Galvanizado
HARDNESS	N.A.

JOYSON SAFETY SYSTEMS

APPROVALS		DATE
DESIGNER	ABG	5/9/2022
REVIEW	RVM	5/9/2022

JOYSON TECHNICAL CENTER

MODEL NAME	M2022-012	SERIES No	WGS001-TRN
MACHINE NAME	WING GUARD SINGLE #1		
PART NUMBER	WGS001-TRN-102-017		
SIZE **B**	PART NAME WGS001-TRN-102-017		REV. **A**
ESCALE: 3:2		DRAWING IN MILLIMETERS	

JSSAM-JTC-MF-FM-0002