NAME	DATE	TIME (HRS)

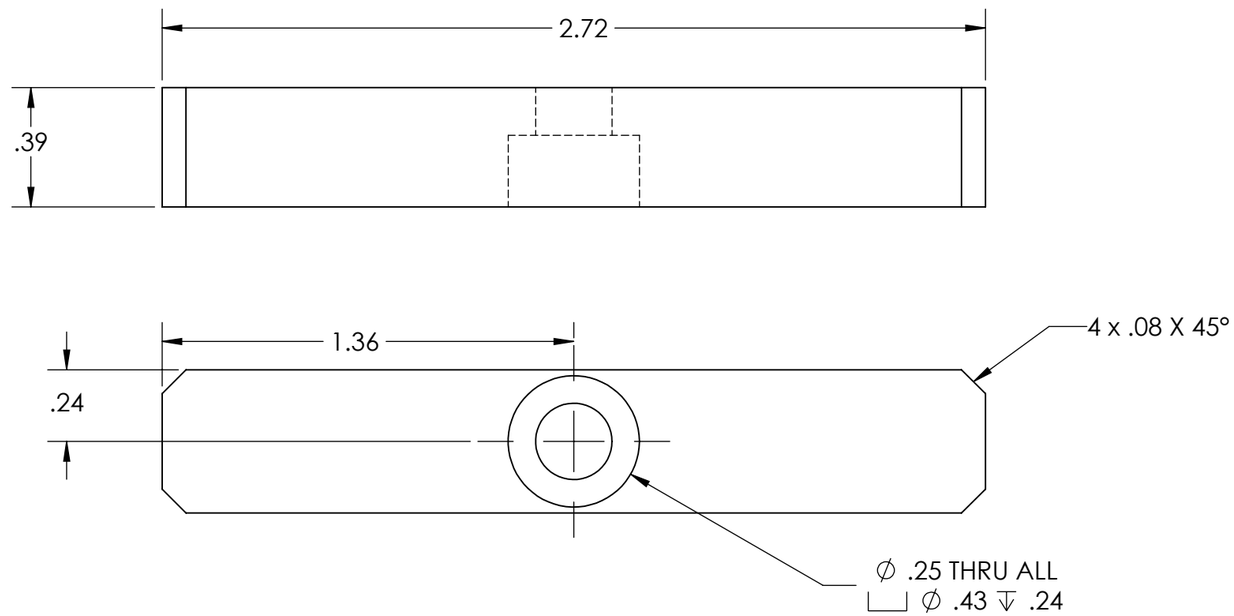

PFM010-MVA-300-006

PAG. 1 de 1

E MEDIDA ESPECIAL

ALL TECHNICAL DATA DISCLOSED HERE IN IS THE PROPERTY OF JOYSON SAFETY SYSTEMS AND SHALL NOT BE USED BY ANY OTHER MANUFACTURER, PROCUREMENT OR DISCLOSURE WITHOUT WRITTEN PERMISSION OF THE OWNMER.

JOYSON
EQUIPO AUTOMOTRIZ AMERICANA S.A. DE C.V.
BOLSAS DE AIRE
NOMBRE: RM
FIRMA:

AUTHORIZE | TALLER | QUALITY

NOTES:
Pieza libre de filos y rebabas.

TOTAL OF PIECES: 6 Pza.
ANG. PROF

REV	DESCRIPTION	DATE	APPROVED

REVIEWS

UNLESS OTHERWISE SPECIFIED

TOLERANCES DIMENSIONS	ISO 2768-1 mK-E ASME Y14.5M-1994	
MM	INCHES	ANGLES
+.1 -.1	+.004 -.004	+1° -1°

MATERIAL: SS 316
SURFACE TREATMENT: "PULIDO"
HARDNESS: N/A

JOYSON SAFETY SYSTEMS

APPROVALS		DATE
DESIGNER	JLOV	3/23/2022
REVIEW	RVM	3/23/2022

JOYSON TECHNICAL CENTER

MODEL NAME	PFM010-MVA	SERIES No	M2022-009
MACHINE NAME	FOLDING MACHINE CANOO DAB		
PART NUMBER	PFM010-MVA-300-006		
SIZE B	PART NAME PFM010-MVA-300-006		REV. A
ESCALE: 2:1		DRAWING IN MILLIMETERS	

JSSAM-JTC-MF-FM-0002-001