NAME	DATE	TIME (HRS)

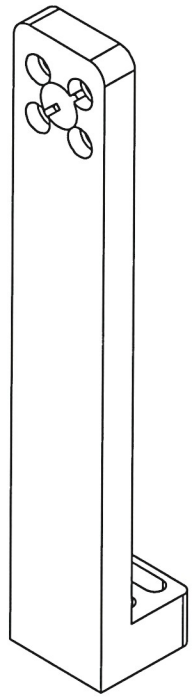

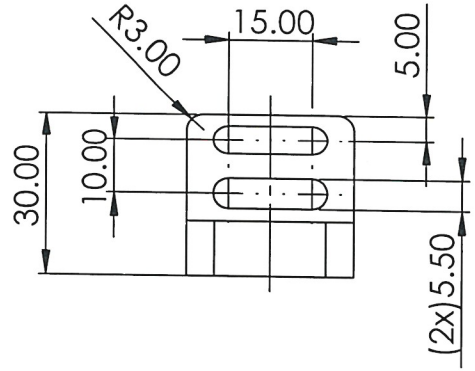

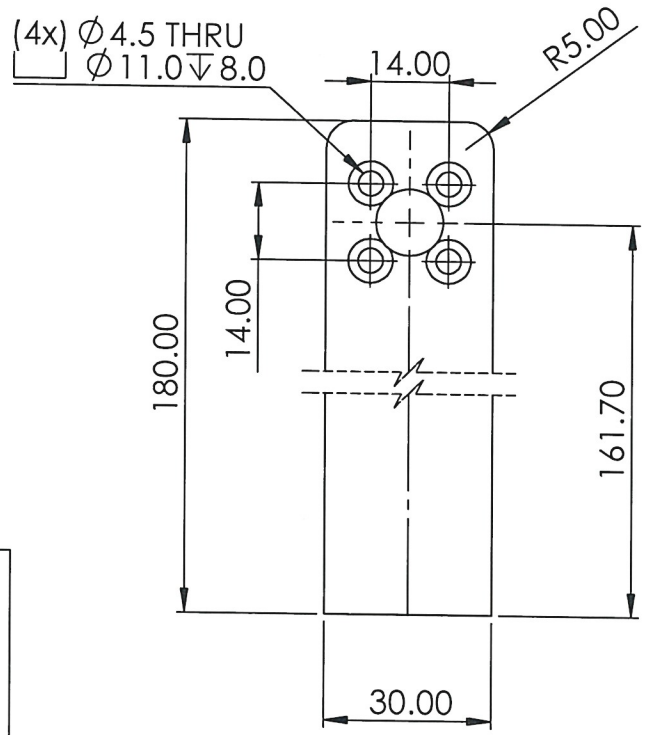

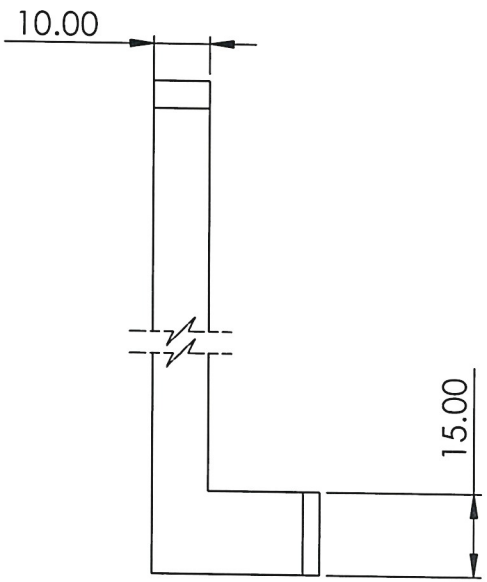

QUALITY

AUTHORIZE

TALLER

NOTES:
Pieza libre de filos y rebabas.

TOTAL OF PIECES	1 Pza.
ANG. PRO	

REV	DESCRIPTION	DATE	APPROVED

REVIEWS

UNLESS OTHERWISE SPECIFIED
TOLERANCES DIMENSIONS ISO 2768-1 mK-E ASME Y14.5M-1994

MM	INCHES	ANGLES
+.1 -.1	+.004 -.004	+1° -1°

MATERIAL: ALUMINIO 6061
SURFACE TREATMENT: PULIDO
HARDNESS: N/A

PAG. 1 de 1

MEDIDA ESPECIAL

JOYSON SAFETY SYSTEMS

APPROVALS		DATE
DESIGNER	AJML	5/10/2022
REVIEW	MA	5/10/2022

ALL TECHNICAL DATA DISCLOSED HERE IN IS THE PROPERTY OF JOYSON SAFETY SYSTEMS AND SHALL NOT BE USED BY ANY OTHER MANUFACTURER, PROCUREMENT OR DISCLOSURE WITHOUT WRITTEN PERMISSION OF THE OWNMER.

JOYSON TECHNICAL CENTER

MODEL NAME: BS002-P1 | SERIES No M2022-027

MACHINE NAME: BEZEL SCREW

PART NUMBER: BS002-P1-008

SIZE	PART NAME	REV.
A	SOPORTE DE PISTON	A

ESCALE 1:2 | DRAWING IN MILLIMETERS

JSSAM-JTC-MF-FM-0002-001