SYM	REVISION RECORD	ISSUE NO	DATE	DR

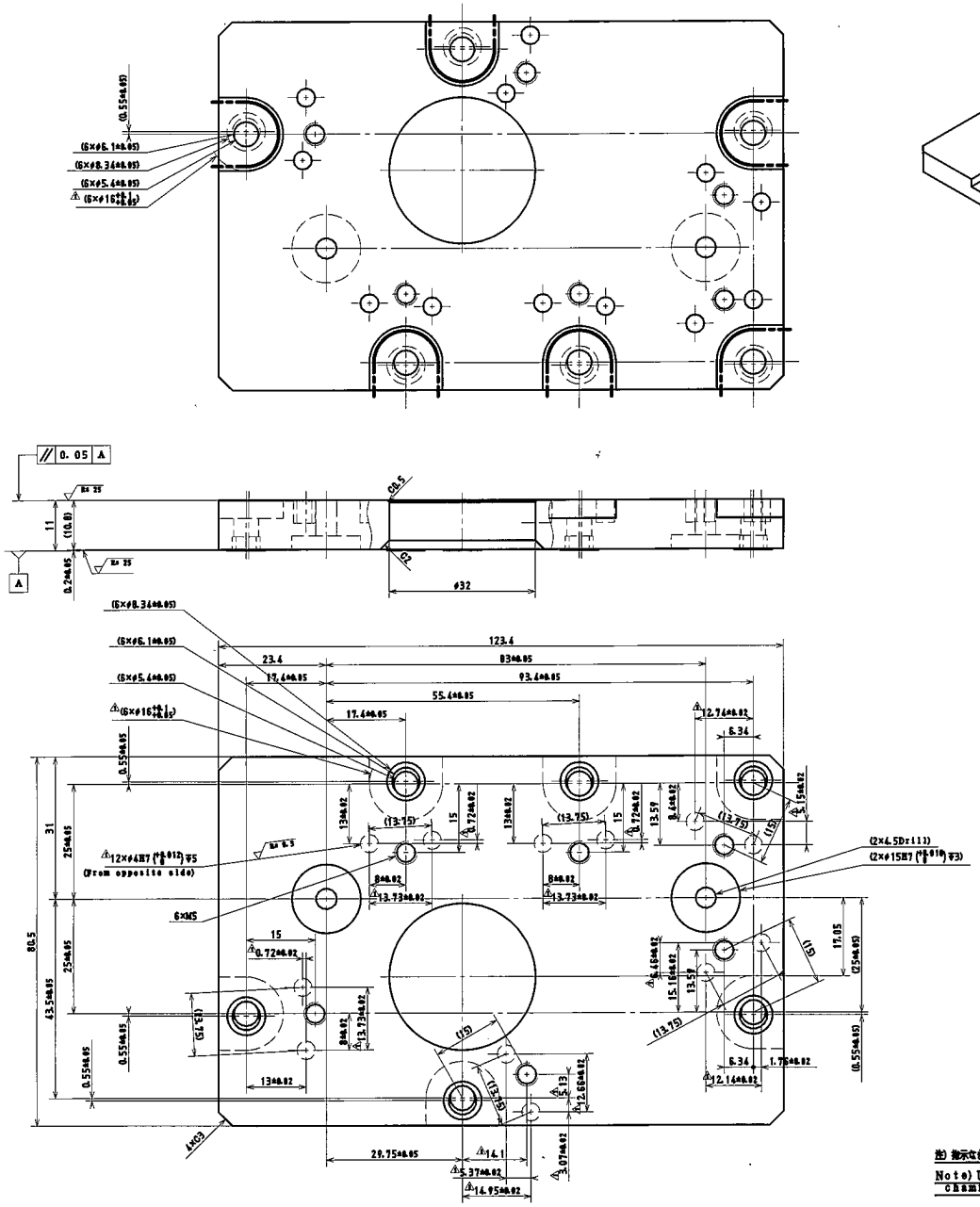

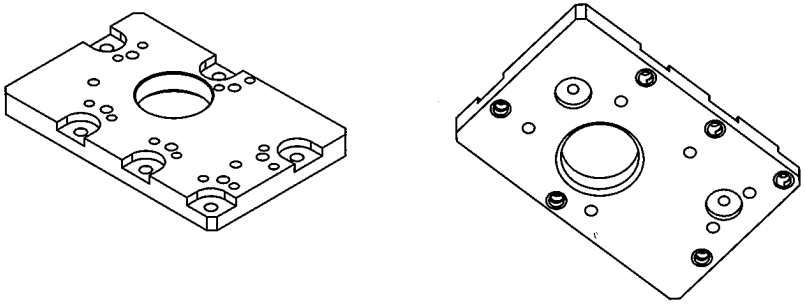

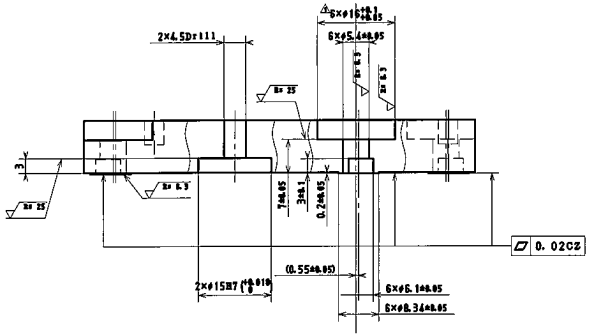

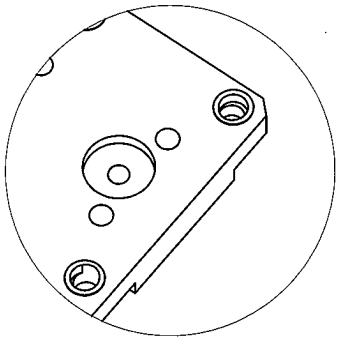

注) 指示なき角部はC0. 5面取りすること

Note) Unless otherwise specified, chamfer on all corners shall be C0. 5.

SUS303

SURFACE TREATMENT	HEAT TREATMENT	MASS UNIT
MICR-20±4μm	HRC:61-63	0.7 KG
MATERIAL SKD11	REFERENCE PART NO.	

Plate

DENSO CORPORATION

M-2.4.3.0.0.7.8.-0.3.0 1 P 1/1

THIS DRAWING AND ITS RELATED TECHNICAL INFORMATION ARE CONFIDENTIAL TO DENSO CORPORATION. THEY MUST NOT BE DISCLOSED TO THIRD PARTIES WITHOUT THE PRIOR WRITTEN CONSENT OF DENSO CORPORATION, NOR MODIFIED OR REPRODUCED IN ANY FORM WHATSOEVER WITHOUT PRIOR WRITTEN CONSENT.

DENSO

品質と安全のデンソー
Quality & Safety First

CONFIDENTIAL