NAME	DATE	TIME (HRS)

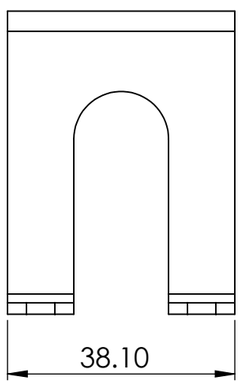

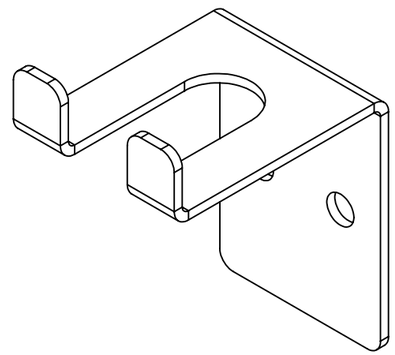

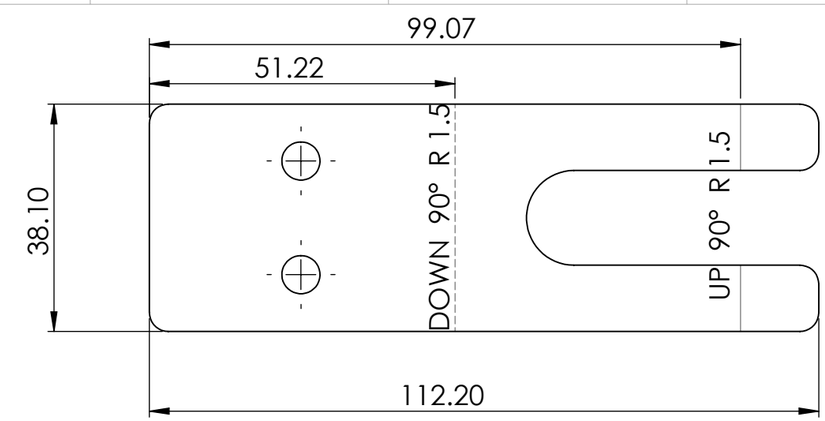

CARA SUPERIOR
CHAPA DESPLEGADA

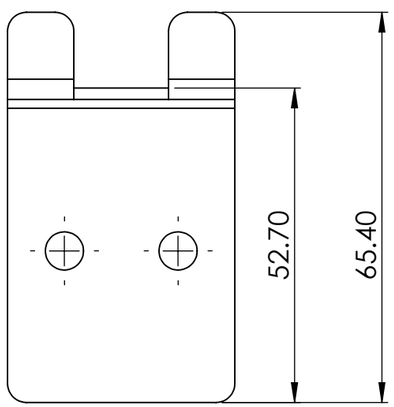

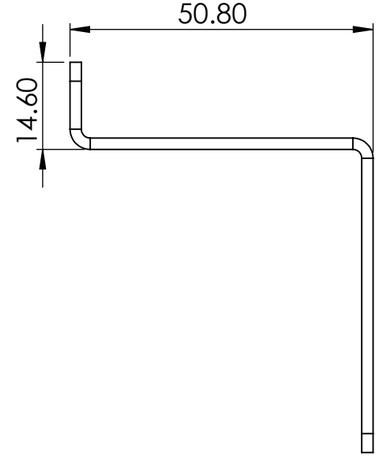

MDM001-TRN-1300-011

PAG. 1 de 1

E MEDIDA ESPECIAL

ALL TECHNICAL DATA DISCLOSED HERE IN IS THE PROPERTY OF JOYSON SAFETY SYSTEMS AND SHALL NOT BE USED BY ANY OTHER MANUFACTURER, PROCUREMENT OR DISCLOSURE WITHOUT WRITTEN PERMISSION OF THE OWNMER.

AUTHORIZE	TALLER	QUALITY

NOTES:
Pieza libre de filos y rebabas.

REV	DESCRIPTION	DATE	APPROVED

REVIEWS

TOTAL OF PIECES: 1 Pza.
ANG. PROF

UNLESS OTHERWISE SPECIFIED

TOLERANCES DIMENSIONS	ISO 2768-1 mK-E ASME Y14.5M-1994	
MM	INCHES	ANGLES
+.1 -.1	+.004 -.004	+1° -1°

MATERIAL: Lamina Inox. Cal. 14
SURFACE TREATMENT: Pulido
HARDNESS: N.A.

JOYSON SAFETY SYSTEMS

APPROVALS		DATE
DESIGNER	LGG	10-Jul-19
REVIEW	JEC	10-Jul-19

JOYSON TECHNICAL CENTER

MODEL NAME	MDM001-TRN	SERIES No	M2019-067
MACHINE NAME	Dobladora Manual		
PART NUMBER	MDM001-TRN-1300-011		
SIZE B	PART NAME MDM001-TRN-1300-011		REV. A
ESCALE: 1:1		DRAWING IN MILLIMETERS	

TKH-MTC-MF-FM-0016-005