ITEM	QTY	DESCRIPTION	PART No.
1	1	SHAFT KEY	GAL-V1898
2	1	LOCKNUT, #TN-14	GAL-05183

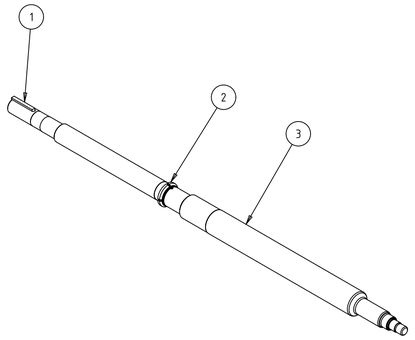

MATERIAL: WARMAN MATERIAL CODE E121 UNLESS OTHERWISE SPECIFIED.
ESTIMATED WEIGHT: 134 lbs

NOTE:
1.) MACHINED SURFACES ARE TO BE 125 RMS OR BETTER UNLESS OTHERWISE SPECIFIED.
2.) MAXIMUM ALLOWABLE RUNOUT ↗ IS .0005 PER FOOT OF LENGTH.
3.) ALL RADII TO BE R .031 UNLESS OTHERWISE SPECIFIED.
4.) DIMENSIONS ARE IN INCHES.

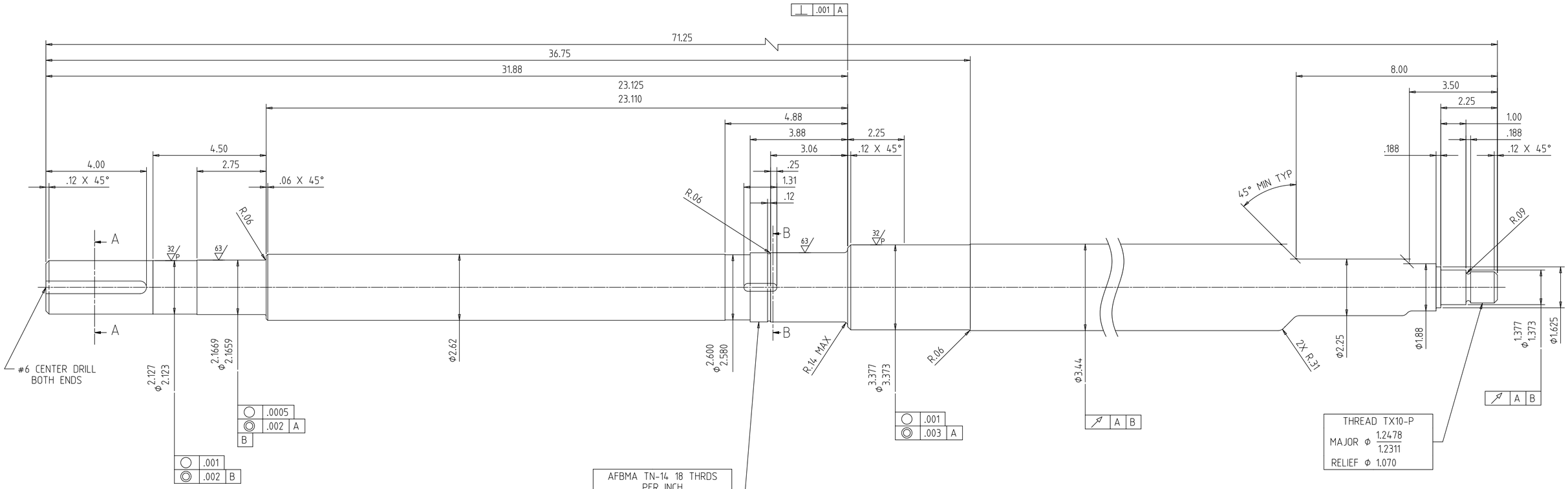

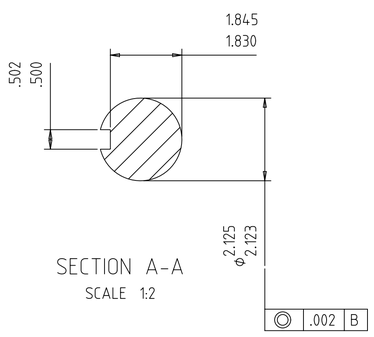

SECTION A-A
SCALE 1:2

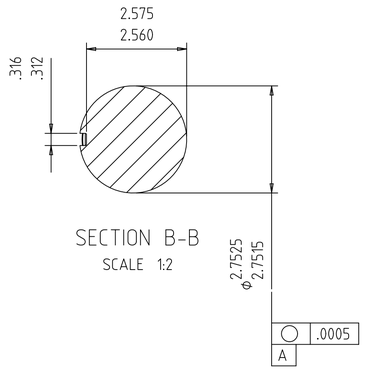

SECTION B-B
SCALE 1:2

REV	DESCRIPTION	DATE	REF NO	BY	CHK
7	47-3962 WAS D3SHK_5002-6	08APR2021	PCN-07003188	KDS	TWF

FOR LIMITS OF UNTOLERANCED DIMENSIONS REFER TO DRG. A4-15895.

OFFICE OF ORIGIN : MADISON
DESIGN TEAM : SLURRY PUMP TECHNOLOGY GROUP

Copyright © Weir Slurry Group, Inc. 2021
Weir Slurry Group, Inc. ("the Company") is the owner of the copyright and all confidential information in this drawing.
The drawing must not be copied in whole or in part, in any form or by any means, and the information in it must not be disclosed to any person, or used for any purpose other than the specific purpose for which it has been provided, without the prior written consent of the Company.

SCALE: 1:2
APP: TWF
CHK: TWF
DRN: K. SCHMIDTKE
DATE: 08APR2021
SHEET 1 OF 1

PRODUCT
WARMAN®
Centrifugal Slurry Pumps
WEIR Minerals

TITLE
SHAFT, 1.5", 2", 3", 4", GREY IRON, HIGH CHROME, 5000, #3, 36" LG
GAL-22197
MACHINING DETAIL

SHEET SIZE: A1
DRAWING No: 47-3962 △1
REVISION: 7