NUM	X	Y	Z	HOLE SIZE

REV	CHANGE DESCRIPTION	CHK'D	DATE

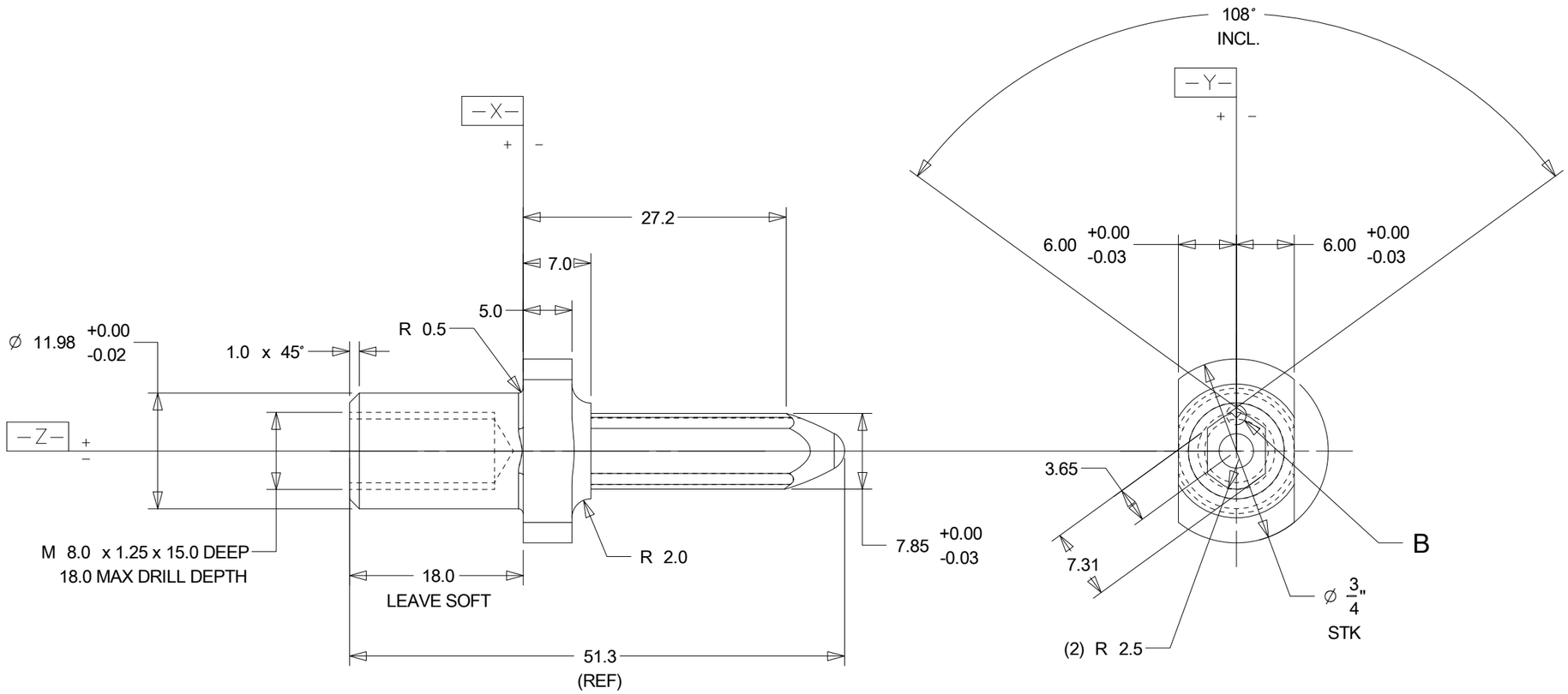

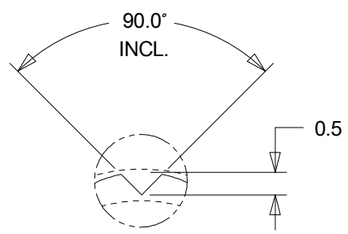

VIEW B
SCALE 8:1

MATERIAL: SAE 8620
STK: 3/4" DIA X 60MM (2.36")

LIQUED CARBURIZE & HARDEN
0.5MM TO 2.0MM DEEP
ROCKWELL "C" 58-62

NOTE:
ALL MACHINED SURFACES TO BE FLAT, PARALLEL AND PERPENDICULAR TO WITHIN 0.015 T.I.R. TO DATUMS X & Z AND CONCENTRIC TO WITHIN 0.03 T.I.R.

THIS DRAWING MAY USE BOTH INCH AND METRIC UNITS OF MEASUREMENT
(* INDICATES INCH DIMENSIONS)

MAXIMUM ALLOWANCE ROUGHNESS OF ALL METRIC
1 PLACE mm FINISH DIMENSIONS TO BE 3.2 MICRONS
2 PLACE mm FINISH DIMENSIONS TO BE 1.6 MICRONS
3 PLACE mm FINISH DIMENSIONS TO BE 0.5 MICRONS
ALL GROUND SURFACES TO BE 0.4 MICRONS.
METRIC - EXCEPT AS NOTED TOLERANCES SHALL BE:
1 PLACE MACHINING ± 0.3
1 PLACE FABRICATION ± 1.5
2 PLACE ± 0.08 BETWEEN MACHINED SURFACES
± 0.03 BETWEEN SINGLE DOWEL AND A HEEL SURFACE
± 0.03 BETWEEN DOWELS IN THE SAME PLANE
± 0.10 BETWEEN DOWELS IN DIFFERENT PLANES
± 0.13 TO SCREW HOLES, NON ACCUMULATIVE
ALL Q SURFACES MUST BE FINISHED EXCEPT FOR COLD DRAWN SUFACES.

WELDMENTS.
ALL WELD FILLETS TO BE 1/4 INCH.
ALL "V" GROOVES TO BE 90 EXCEPT AS SHOWN.
ADD VENT HOLES IN ALL WELDMENTS WHERE TRAPPED AIR IS A POSSIBILITY, I.E. TUBING CAPPED AT BOTH ENDS, BOXED FORMS ETC.
SPOTFACE SCREW AND / OR BOLT HEAD AND / OR WASHERS IS INFRINGED UPON BY WELD BEADS.

ALL EDGES OF PART CONTACT SURFACES ON LOCATING BLOCKS AND FINGERS TO HAVE .12 INCH / 3.00 mm AFTER SPOTTING.

BUILD VENDOR TO BE RESPONSIBLE FOR ACCURACY OF STANDARD PRODUCTS AFTER ALTERATION.

DOWEL HOLE TOLERANCES	DOWEL TOLERANCE
FOR PRESS FIT USE H6	m6
FOR SLIP FIT USE F7	

MARK IDENTIFICATION AND MATERIAL NUMBERS ON DETAILS.
PAINT IDENTIFICATION NUMBERS ON STRUCTURAL WORK.
DO NOT SCALE DRAWING

3rd ANGLE PROJECTION

S1-190-04
08
JOB #15143

	SAFETY ORANGE
	PAINT
	NO PAINT
X	BLACK OXIDE

SHT 1 OF 1 SHTS		SHOWN ON A-DT1-M341-U08-L
DET BY JS	DES BY JS	TITLE LOCATING PIN
CHK BY JLD	DATE 10/21/16	DRAWING NO. OR TOOL NO. A-DT1-M341-U08-L-D16-PS
SCALE NONE	DIVISION: AUTOMOTIVE PLANT: METALSA LV APODACA LOCATION/ACTIVITY: APODACA,N.L. MEXICO	PASLIN

M000058038
M000058038