NAME	DATE	TIME (HRS)

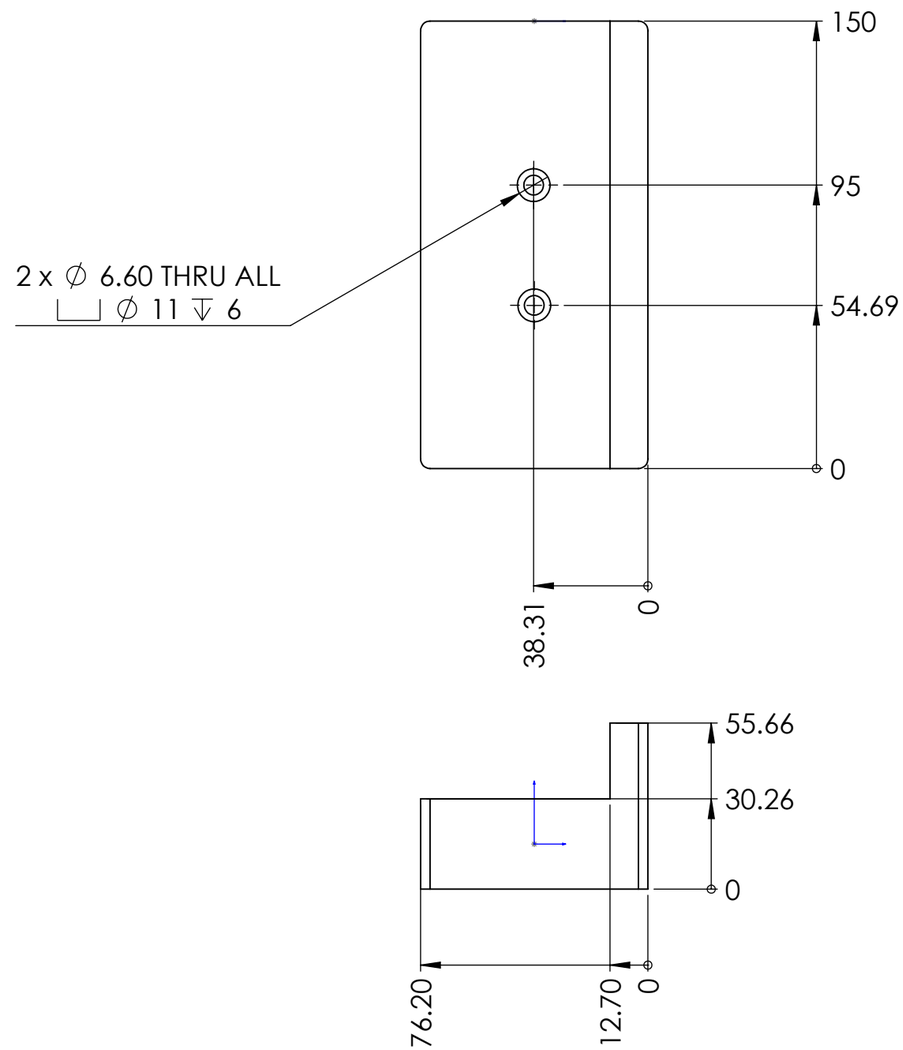

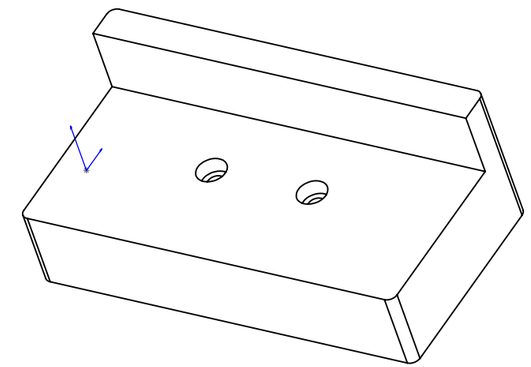

CPSA001-TRN-100-010

PAG. 1 de 1

E MEDIDA ESPECIAL

ALL TECHNICAL DATA DISCLOSED HERE IS PROPERTY OF **TAKATA** SEAT BELTS INC. AND SHALL NOT BE USED BY ANY OTHER MANUFACTURER, PROCUREMENT OR DISCLOSURE WITHOUT WRITTEN PERMISSION OF THE OWNER

NOTES:

Pieza libre de filos y rebabas.

TOTAL OF PIECES	1
ANG. PROF	

UNLESS OTHERWISE SPECIFIED

TOLERANCES DIMENSIONS: ISO 2768-1 mK-E ASME Y14.5M-1994

MM	INCHES	ANGLES
+.1 -.1	+.004 -.004	+1° -1°

MATERIAL: NYLAMI NEGRO

SURFACE TREATMENT

HARDNESS

REV	DESCRIPTION	DATE	APPROVED

REVIEWS

AUTHORIZE | TALLER | QUALITY

TAKATA

APPROVALS		DATE
DESIGNER	GRMV	15/04/2019
REVIEW	JEC	15/04/2019

TAKATA MONTERREY TECHNICAL CENTER

MODEL NAME	CPSA001-TRN	SERIES No	M2019-072R
MACHINE NAME	Op 80 C Pillar / Screw Assy		
PART NUMBER	CPSA001-TRN-100-010		
SIZE **B**	PART NAME		REV. **A**
ESCALE: 1:2		DRAWING IN MILLIMETERS	

TKH-MTC-MF-FM-0016-004