NAME	DATE	TIME (HRS)

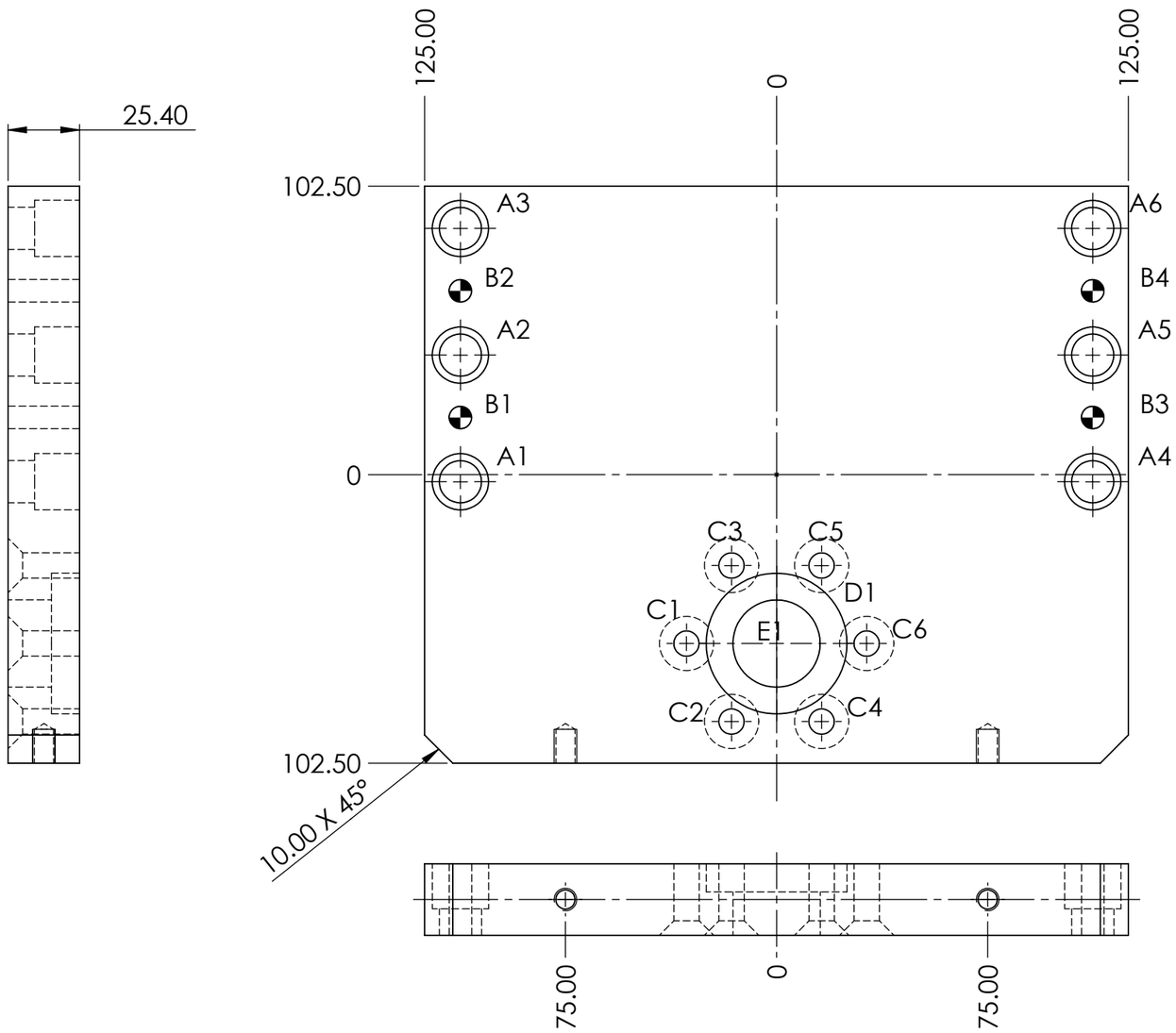

TAG	X LOC	Y LOC	SIZE
A1	-112.30	-2.50	∅ 15.00 THRU ALL ⌴ ∅ 20.00 ↧ 16.00
A2	-112.30	42.50	
A3	-112.30	87.50	
A4	112.30	-2.50	
A5	112.30	42.50	
A6	112.30	87.50	
B1	-112.30	20.33	+0.041 ∅ 8.000 G9 +0.005 THRU ALL
B2	-112.30	65.33	
B3	112.30	20.33	
B4	112.30	65.33	
C1	-32	-60	∅ 9.00 THRU ALL ∨ ∅ 19.30 X 90°
C2	-16	-87.71	
C3	-16	-32.29	
C4	16	-87.71	
C5	16	-32.29	
C6	32	-60	
D1	0	-60	∅30.993 THRU ⌴ ∅50.000 G9 +0.07 +0.01 ↧ 10.000
E1	0	-60	∅30.99 THRU

RP001-TRN-102-003

PAG. 1 de 1

E MEDIDA ESPECIAL

ALL TECHNICAL DATA DISCLOSED HERE IN IS THE PROPERTY OF JOYSON SAFETY SYSTEMS AND SHALL NOT BE USED BY ANY OTHER MANUFACTURER, PROCUREMENT OR DISCLOSURE WITHOUT WRITTEN PERMISSION OF THE OWNMER.

NOTES:
Pieza libre de filos y rebabas.

TOTAL OF PIECES: 1 Pza.

ANG. PROF

REV	DESCRIPTION	DATE	APPROVED

REVIEWS

AUTHORIZE | TALLER | QUALITY

UNLESS OTHERWISE SPECIFIED

TOLERANCES DIMENSIONS	ISO 2768-1 mK-E ASME Y14.5M-1994	
MM	INCHES	ANGLES
+.1 -.1	+.004 -.004	+1° -1°

MATERIAL: A36

SURFACE TREATMENT: OXIDO NEGRO

HARDNESS: N.A.

JOYSON SAFETY SYSTEMS

APPROVALS		DATE
DESIGNER	JEC	29/06/2022
REVIEW	JEC	29/06/2022

JOYSON TECHNICAL CENTER

MODEL NAME | SERIES No

MACHINE NAME

PART NUMBER: RP001-TRN-102-003

SIZE: B | PART NAME: SUPERIORPR | REV.

ESCALE: 1:2 | DRAWING IN MILLIMETERS

TKH-MTC-MF-FM-0016-005