| NAME | DATE | TIME (HRS) |
|---|---|---|
| | | |
| | | |
| | | |
| | | |

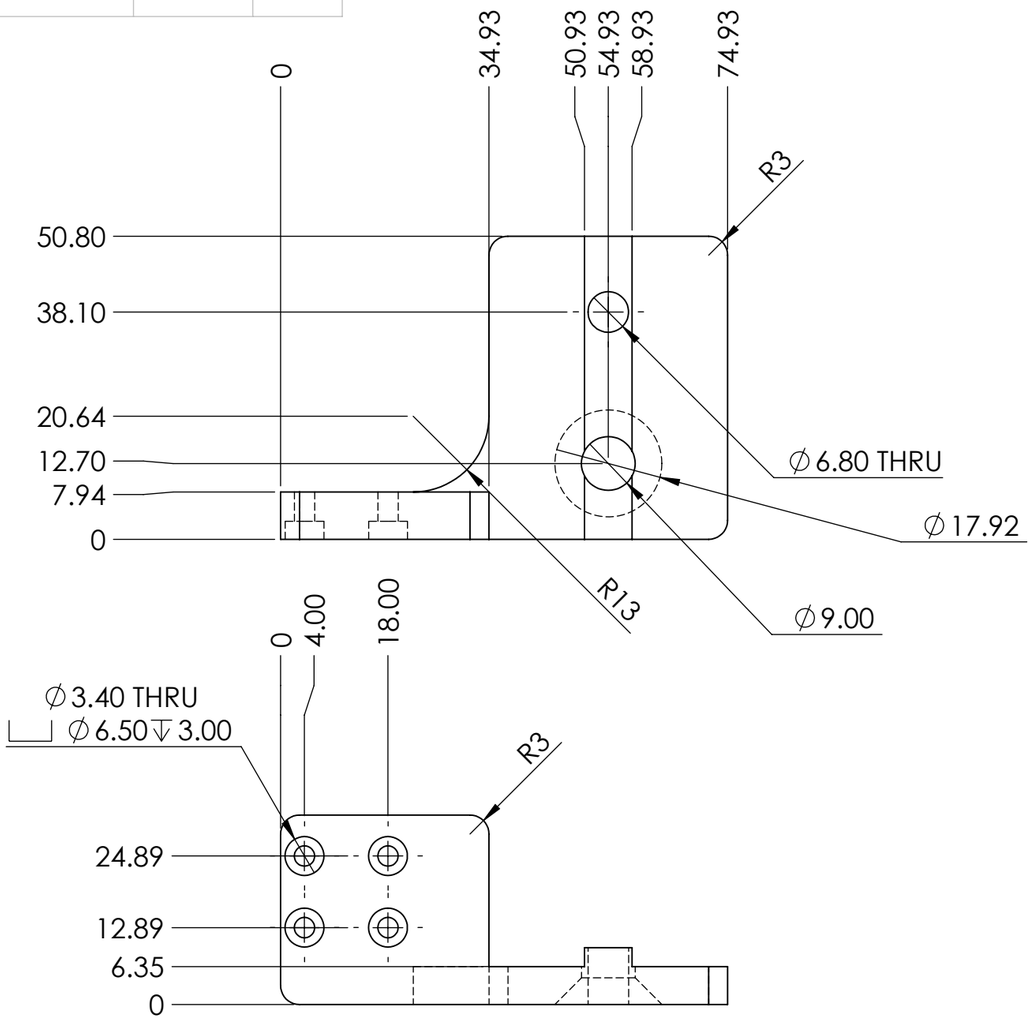


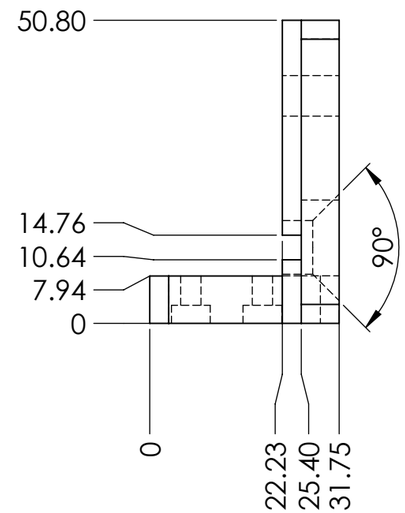


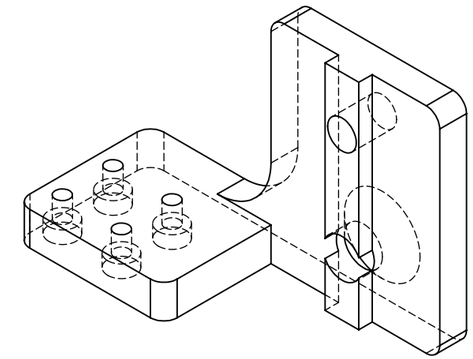

JAPM003-AC-200-002

PAG. 1 de 1

E MEDIDA ESPECIAL

**ALL TECHNICAL DATA DISCLOSED HERE IN IS THE PROPERTY OF JOYSON SAFETY SYSTEMS AND SHALL NOT BE USED BY ANY OTHER MANUFACTURER, PROCUREMENT OR DISCLOSURE WITHOUT WRITTEN PERMISSION OF THE OWNMER.**

| AUTHORIZE | TALLER | QUALITY |
|---|---|---|
| | | |

**NOTES:**

Pieza libre de filos y rebabas.

| REV | DESCRIPTION | DATE | APPROVED |
|---|---|---|---|
| | | | |
| | | | |
| | | | |

REVIEWS

TOTAL OF PIECES: 4 Pza.

ANG. PROF

UNLESS OTHERWISE SPECIFIED

TOLERANCES DIMENSIONS: ISO 2768-1 mK-E ASME Y14.5M-1994

| MM | INCHES | ANGLES |
|---|---|---|
| +.1 -.1 | +.004 -.004 | +1° -1° |

MATERIAL: 6061 Aluminium

SURFACE TREATMENT: Pulido

HARDNESS: N.A.

JOYSON SAFETY SYSTEMS

| APPROVALS | | DATE |
|---|---|---|
| DESIGNER | GFM | 05/07/2022 |
| REVIEW | EG | 05/07/2022 |

**JOYSON TECHNICAL CENTER**

MODEL NAME | SERIES No

MACHINE NAME

PART NUMBER: JAPM003-AC-200-002

| SIZE | PART NAME | REV. |
|---|---|---|
| B | Safety Curtains Mount B | A |

ESCALE: 1:1 | DRAWING IN MILLIMETERS

TKH-MTC-MF-FM-0016-005