ITEM	QTY	DESCRIPTION
1	1	C5 x 6.7# CHANNEL AMERICAN STD. 64-1/2 LG.
2	2	2 x 2 x 3/8 STRUCTURAL ANGLE 2-1/4 LG.

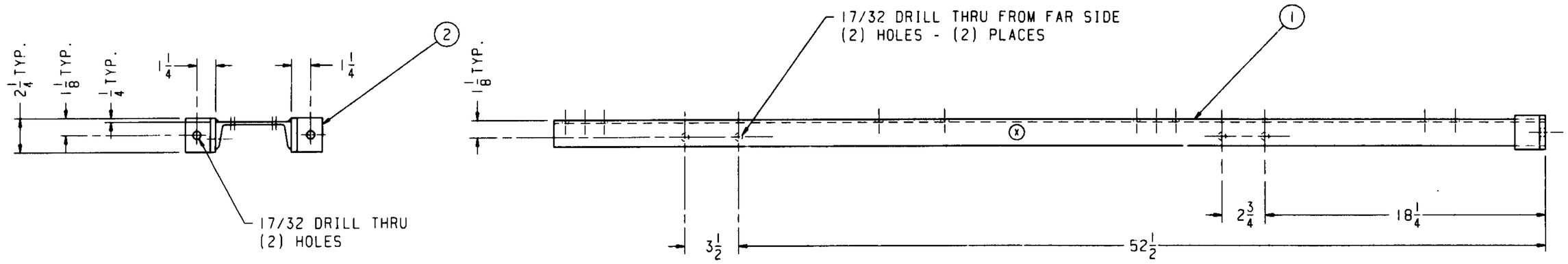

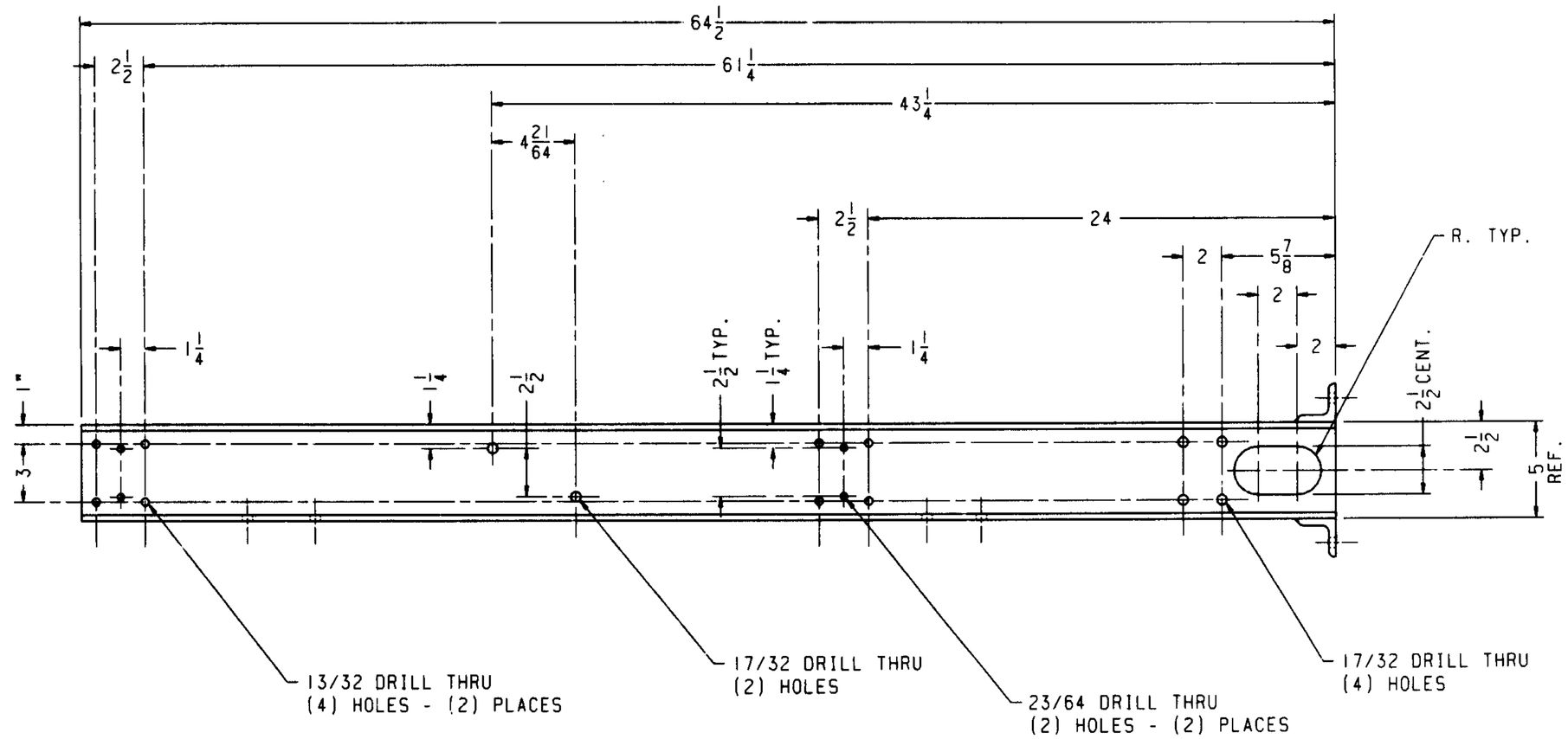

NOTE: WELDED CONSTRUCTION

M

USED ON ASSEMBLY NO. HF-0366

CHANGES

"INFORMATION CONTAINED HEREIN CONSTITUTES PROPRIETARY CONFIDENTIAL INFORMATION OF OWENS-ILLINOIS, AND IS TO BE ACCEPTED ONLY SUBJECT TO THAT UNDERSTANDING. IT IS TO BE KEPT CONFIDENTIAL AND NOT COPIED, USED, OR CONVEYED TO OTHERS WITHOUT OWENS-ILLINOIS' WRITTEN AUTHORIZATION."

UNLESS SPECIFIED:
FINISHED SURFACE ROUGHNESS 125 √
FINISHED DIMENSIONS-FRACTIONAL ±.015
DECIMAL ±.005
BREAK SHARP EDGES
MARK PART NUMBER AT X

NAME: SUPPORT - L.H.

DRAWN	CHECKED	DATE	SCALE
PA/RLB	PA/JWC	10-25-95	1/4

MATERIAL: WELDMENT
SEE BILL OF MATERIAL

OWENS-BROCKWAY
GLASS CONTAINERS, a unit of Owens-Illinois
DRAWING NUMBER
HF-5837
SHEET ___

Copia generada por: Ernesto Ricardo Morales Rodriguez
FECHA DE IMPRESIÓN: 19/04/2022
ADN - ADMINISTRACIÓN DE DIBUJOS NETWORK