General Dimension Tolerance			
0 ~ 4	± 0.1	16 ~ 63	± 0.3
4 ~ 16	± 0.2	63 ~	± 0.5

REVISIONS			
REV.	DESCRIPTION	DATE	APPROVED
1	DESIGN CHANGE	13/06/2019	CLAUDIO G

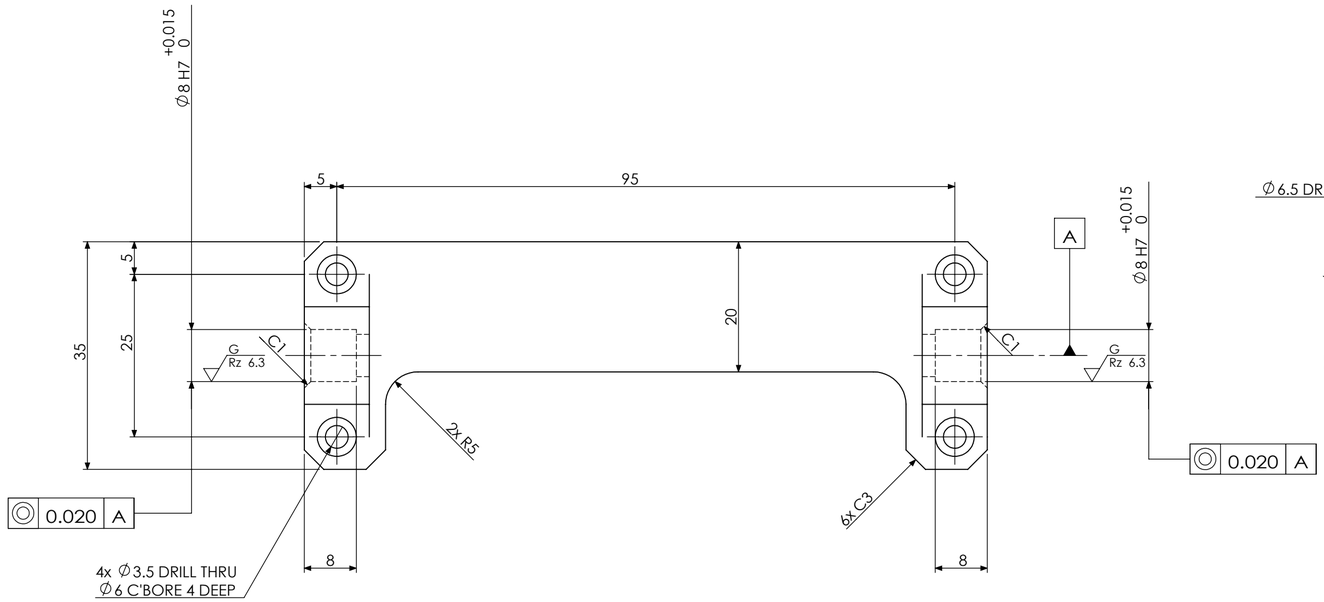

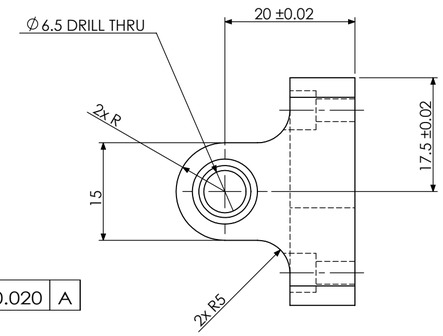

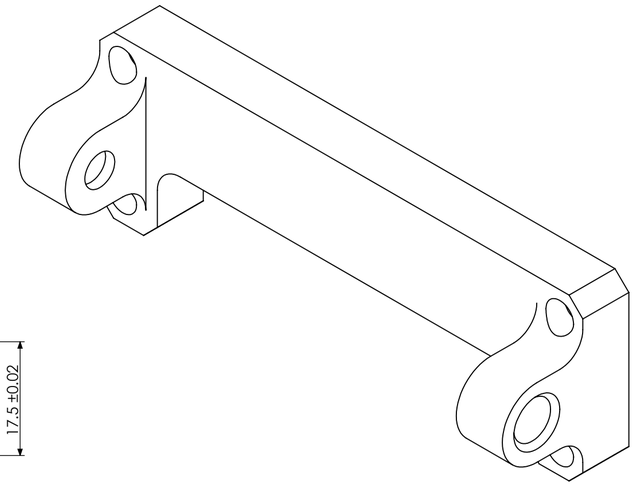

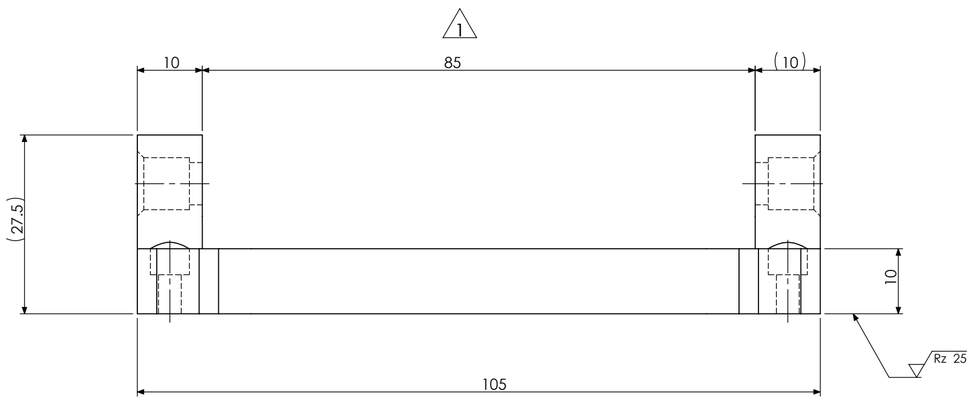

NOTE: ALL EDGES MUST BE C0.5 UNLESS OTHERWISE SPECIFIED

Rz 100 (Rz 25 G Rz 6.3)

SURFACE TREATMENT	HEAT TREATMENT	WEIGHT

MATERIAL:	RESEMBLANCE PART No.	IMPO CODE	I/O CODE
SUS303 (AISI 303)			

PART NAME: BUSHING HOUSING

DENSO MEXICO

APPROVED	CHECKED	CHECKED	DESIGNED	DRAWN
			CLAUDIO GONZALEZ	CLAUDIO GONZALEZ

DWG NO. M-1058228-191 | A2 | ASP CODE | SHEET 1 OF 1

QTY.: 1 | No.: 19 | SCALE:1:1

DENSO

CONFIDENTIAL