General Dimension Tolerance			
0 ~ 4	± 0.1	16 ~ 63	± 0.3
4 ~ 16	± 0.2	63 ~	± 0.5

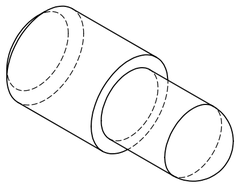

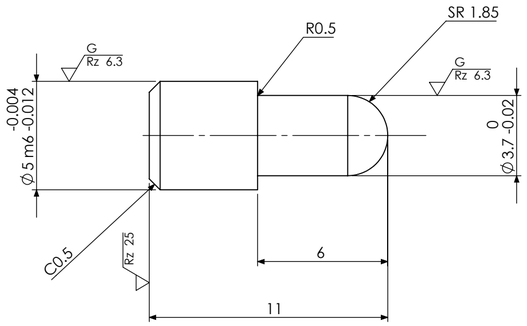

Rz 100 (Rz 25 G Rz 6.3)

SURFACE TREATMENT	HEAT TREATMENT	WEIGHT
MICr-20 +/- 4 µm ALL PART	HRC 57~64 QT	

MATERIAL:	RESEMBLANCE PART No.	IMPO CODE	I/O CODE
SKD11 (ASTM A681 D2)			

PART NAME: PIN- 0091, 1270, 1280 & 0330 MODELS

DENSO MEXICO

APPROVED	CHECKED	CHECKED	DESIGNED	DRAWN
				JULIO SERRATO

DWG NO. M-1059913-310 | A2 | ASP CODE | SHEET 1 OF 1

QTY.: 4 | No.: 31 | SCALE:5:1

CONFIDENTIAL