NAME	DATE	TIME (HRS)

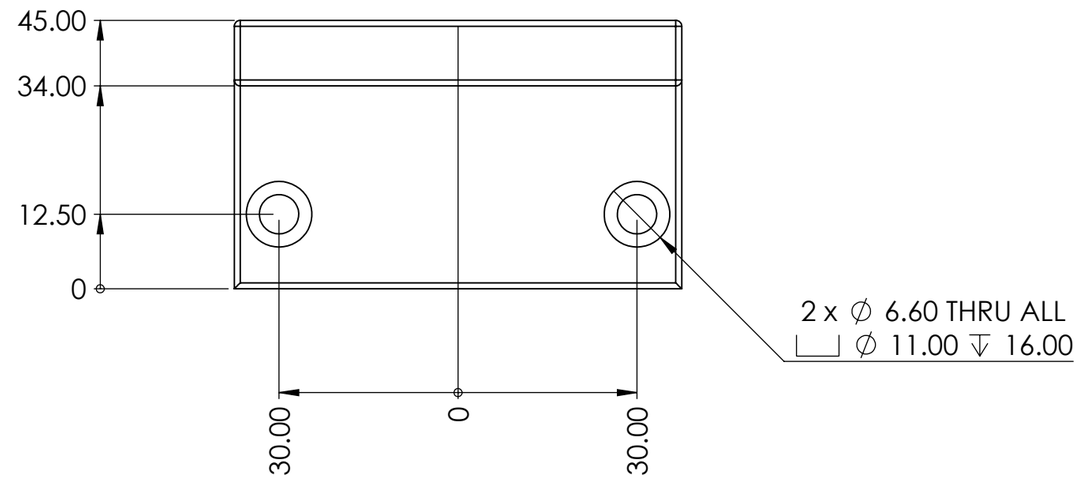

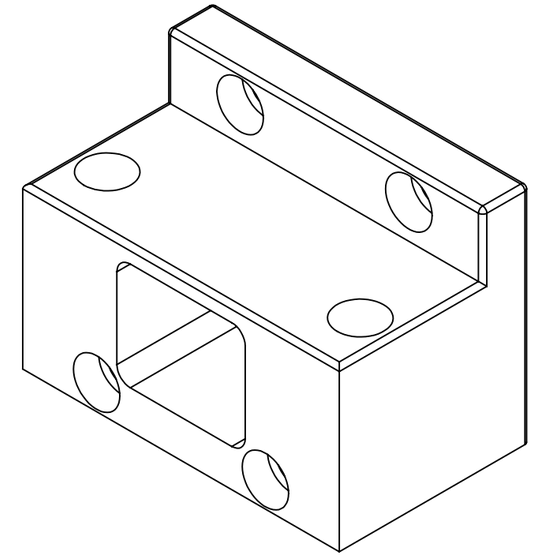

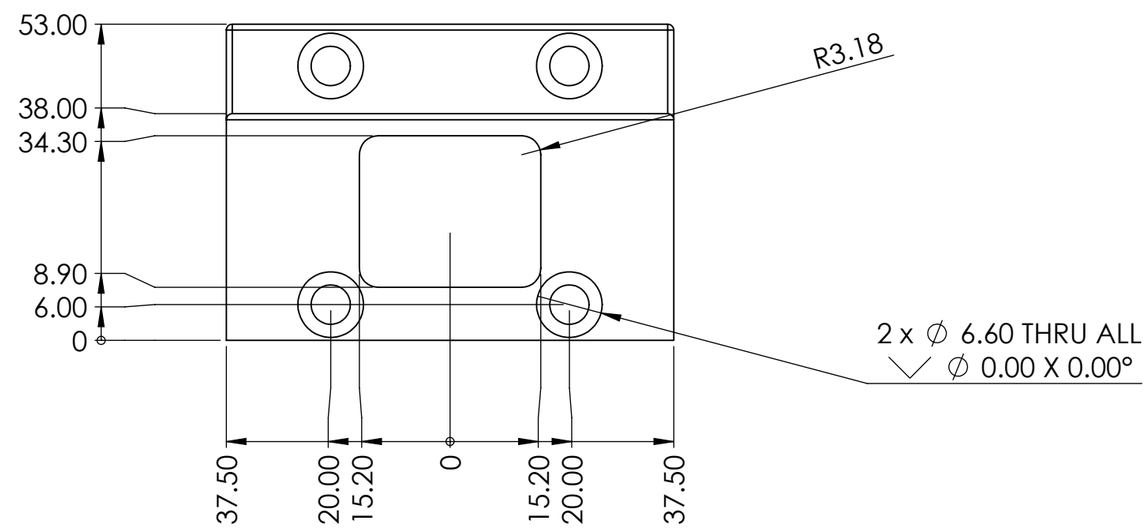

PFM009-MVA-305-001

PAG. 1 de 1

E MEDIDA ESPECIAL

ALL TECHNICAL DATA DISCLOSED HERE IN IS THE PROPERTY OF JOYSON SAFETY SYSTEMS AND SHALL NOT BE USED BY ANY OTHER MANUFACTURER, PROCUREMENT OR DISCLOSURE WITHOUT WRITTEN PERMISSION OF THE OWNMER.

JOYSON
EQUIPO AUTOMOTRIZ AMERICANA S.A. DE C.V.
BOLSAS DE AIRE
NOMBRE: RM
FIRMA:

AUTHORIZE | TALLER | QUALITY

NOTES:
Pieza libre de filos y rebabas.

TOTAL OF PIECES	4 Pza.
ANG. PROF	

REV	DESCRIPTION	DATE	APPROVED

REVIEWS

UNLESS OTHERWISE SPECIFIED

TOLERANCES DIMENSIONS	ISO 2768-1 mK-E ASME Y14.5M-1994	
MM	INCHES	ANGLES
+.1 -.1	+.004 -.004	+1° -1°

MATERIAL:	D2 Steel
SURFACE TREATMENT	Pavonado
HARDNESS	HRC 50-55

JOYSON SAFETY SYSTEMS

APPROVALS		DATE
DESIGNER	ABG	1/31/2022
REVIEW	RVM	1/31/2022

JOYSON TECHNICAL CENTER

MODEL NAME	PFM009-MVA	SERIES No	M2022-003
MACHINE NAME	QCF- VOVLO DAB		
PART NUMBER	PFM009-MVA-305-001		
SIZE **B**	PART NAME PFM009-MVA-305-001		REV. **A**
ESCALE: 1:1		DRAWING IN MILLIMETERS	

JSSAM-JTC-MF-FM-0002-001