NAME	DATE	TIME (HRS)

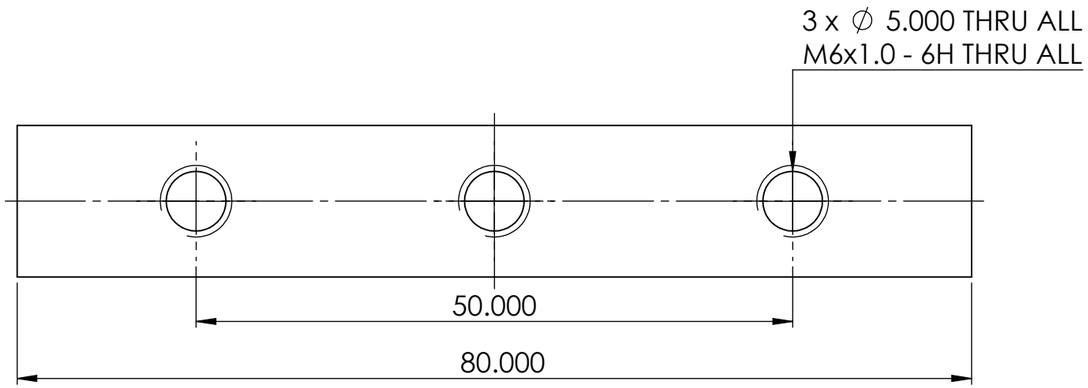

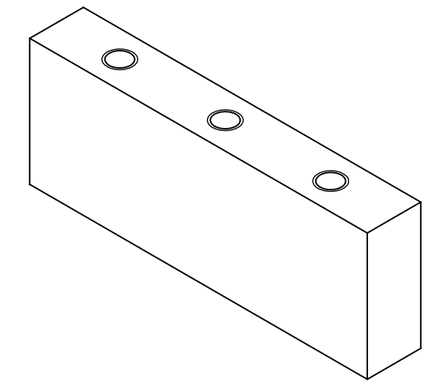

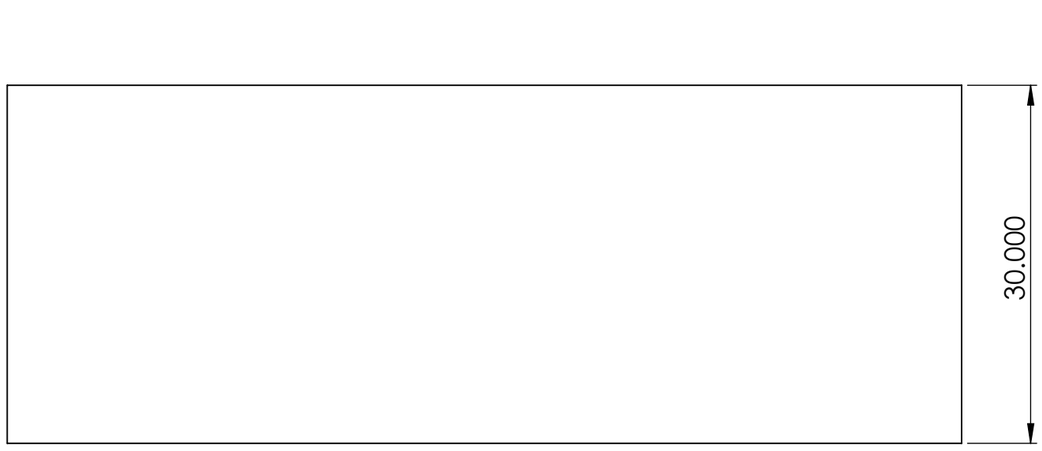

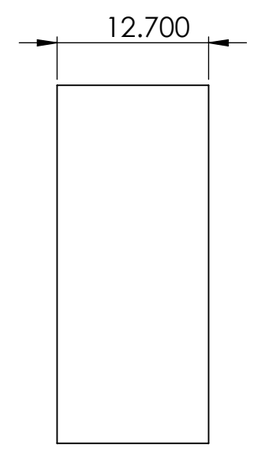

FM002-MVA-301-004

PAG. 1 de 1

MEDIDA ESPECIAL

ALL TECHNICAL DATA DISCLOSED HERE IN IS THE PROPERTY OF JOYSON SAFETY SYSTEMS AND SHALL NOT BE USED BY ANY OTHER MANUFACTURER, PROCUREMENT OR DISCLOSURE WITHOUT WRITTEN PERMISSION OF THE OWNMER.

AUTHORIZE	TALLER	QUALITY

NOTES:
Pieza libre de filos y rebabas.

REV	DESCRIPTION	DATE	APPROVED

REVIEWS

TOTAL OF PIECES: 16 Pza.

ANG. PROF

UNLESS OTHERWISE SPECIFIED

TOLERANCES DIMENSIONS	ISO 2768-1 mK-E ASME Y14.5M-1994	
MM	INCHES	ANGLES
+.1 -.1	+.004 -.004	+1° -1°

MATERIAL: 1018 Cold Rolled

SURFACE TREATMENT: Galvanizado

HARDNESS: N.A.

JOYSON SAFETY SYSTEMS

APPROVALS		DATE
DESIGNER	LGG	2/2/2022
REVIEW	RVM	2/2/2022

JOYSON TECHNICAL CENTER

MODEL NAME	FM003-TRN	SERIES No	M2021-156R
MACHINE NAME	FOLDING MACHINE J34A HSAB		
PART NUMBER	FM002-MVA-301-004		
SIZE **B**	PART NAME SOPORTES PARA PALETAS DE DOBLADO		REV. **A**
ESCALE: 2:1		DRAWING IN MILLIMETERS	

JSSAM-JTC-MF-FM-0002