NAME	DATE	TIME (HRS)

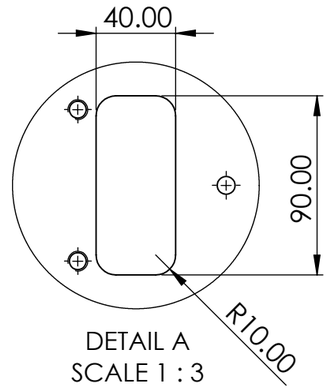

DETAIL A
SCALE 1 : 3

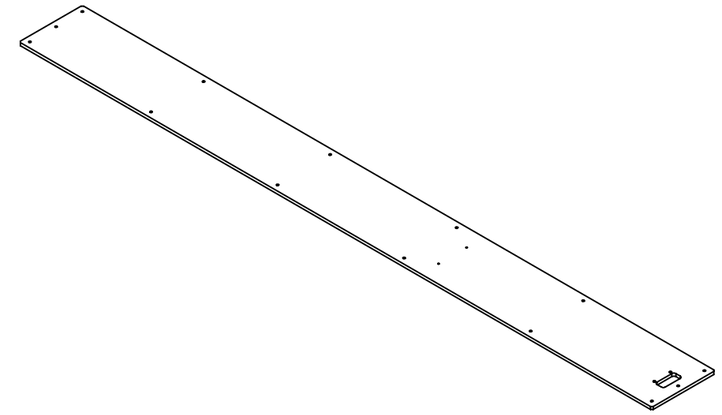

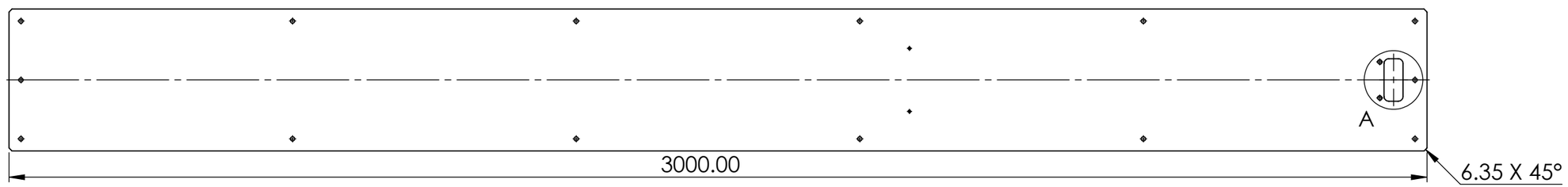

FM004-TRN-700-002

PAG. 1 de 2

MEDIDA ESPECIAL

ALL TECHNICAL DATA DISCLOSED HERE IN IS THE PROPERTY OF JOYSON SAFETY SYSTEMS AND SHALL NOT BE USED BY ANY OTHER MANUFACTURER, PROCUREMENT OR DISCLOSURE WITHOUT WRITTEN PERMISSION OF THE OWNMER.

AUTHORIZE	TALLER	QUALITY

NOTES:
Pieza libre de filos y rebabas.

REV	DESCRIPTION	DATE	APPROVED

REVIEWS

TOTAL OF PIECES: 1 Pza.

ANG. PROF

UNLESS OTHERWISE SPECIFIED

TOLERANCES DIMENSIONS	ISO 2768-1 mK-E ASME Y14.5M-1994	
MM	INCHES	ANGLES
+.1 -.1	+.004 -.004	+1° -1°

MATERIAL: 6061 Aluminium

SURFACE TREATMENT: Pulido

HARDNESS: N.A.

JOYSON SAFETY SYSTEMS

APPROVALS		DATE
DESIGNER	NMM	7/4/2022
REVIEW	JEC	7/4/2022

JOYSON TECHNICAL CENTER

MODEL NAME	FM004-TRN	SERIES No	M2022-108
MACHINE NAME	FOLDING MACHINE		
PART NUMBER	FM004-TRN-700-002		
SIZE **B**	PART NAME		REV. **A**
ESCALE: 1:20		DRAWING IN MILLIMETERS	

TKH-MTC-MF-FM-0016-005

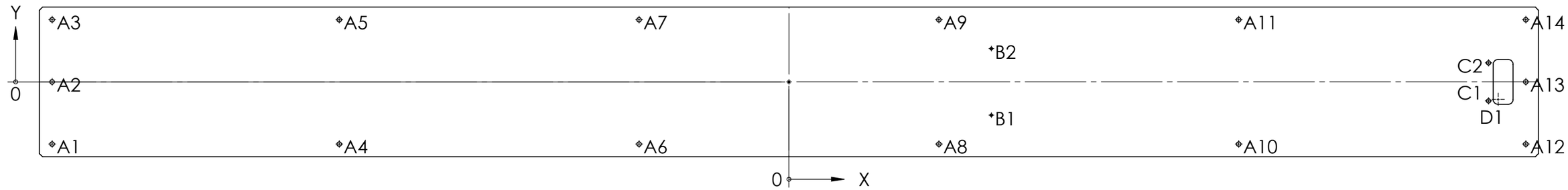

TAG	X LOC	Y LOC	SIZE
A1	-1474.60	-124.60	∅ 9.00 THRU ALL
A2	-1474.60	0	
A3	-1474.60	124.60	
A4	-900	-124.60	
A5	-900	124.60	
A6	-300	-124.60	
A7	-300	124.60	
A8	300	-124.60	
A9	300	124.60	
A10	900	-124.60	
A11	900	124.60	
A12	1474.60	-124.60	
A13	1474.60	0	
A14	1474.60	124.60	
B1	405	-66.68	∅ 5.00 THRU ALL M6x1.0 - 6H THRU ALL
B2	405	66.68	
C1	1400	-38.10	∅ 8.50 THRU ALL M10x1.5 - 6H THRU ALL
C2	1400	38.10	
D1	1429.20	0	

FM004-TRN-700-002

PAG. 2 de 2

E MEDIDA ESPECIAL

ALL TECHNICAL DATA DISCLOSED HERE IN IS THE PROPERTY OF JOYSON SAFETY SYSTEMS AND SHALL NOT BE USED BY ANY OTHER MANUFACTURER, PROCUREMENT OR DISCLOSURE WITHOUT WRITTEN PERMISSION OF THE OWNMER.

AUTHORIZE	TALLER	QUALITY

NOTES:

Pieza libre de filos y rebabas.

TOTAL OF PIECES: 1 Pza.

ANG. PROF

REV	DESCRIPTION	DATE	APPROVED

REVIEWS

UNLESS OTHERWISE SPECIFIED

TOLERANCES DIMENSIONS: ISO 2768-1 mK-E ASME Y14.5M-1994

MM	INCHES	ANGLES
+.1 -.1	+.004 -.004	+1° -1°

MATERIAL: 6061 Aluminium

SURFACE TREATMENT: Pulido

HARDNESS: N.A.

JOYSON SAFETY SYSTEMS

APPROVALS		DATE
DESIGNER	NMM	7/4/2022
REVIEW	JEC	7/4/2022

JOYSON TECHNICAL CENTER

MODEL NAME: FM004-TRN — SERIES No: M2022-108

MACHINE NAME: FOLDING MACHINE

PART NUMBER: FM004-TRN-700-002

SIZE: **B** — PART NAME — REV.: **A**

ESCALE: 1:20 — DRAWING IN MILLIMETERS

TKH-MTC-MF-FM-0016-005