General Dimension Tolerance			
0 ~ 4	± 0.1	16 ~ 63	± 0.3
4 ~ 16	± 0.2	63 ~	± 0.5

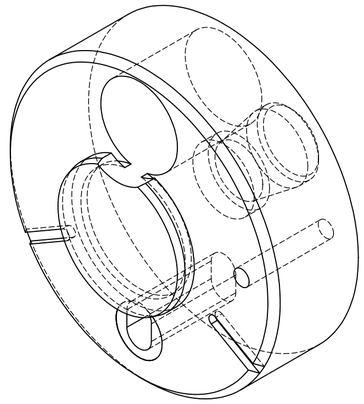

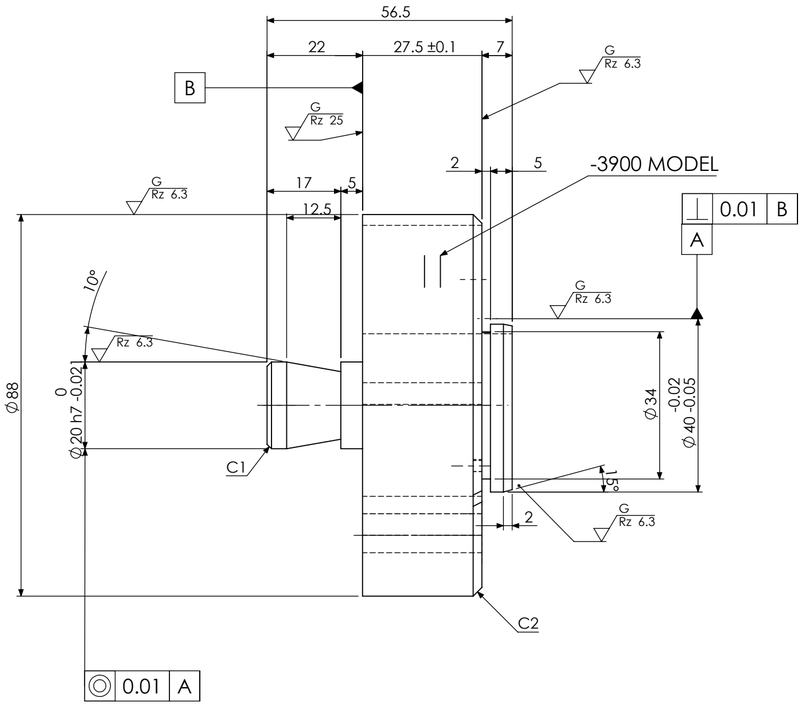

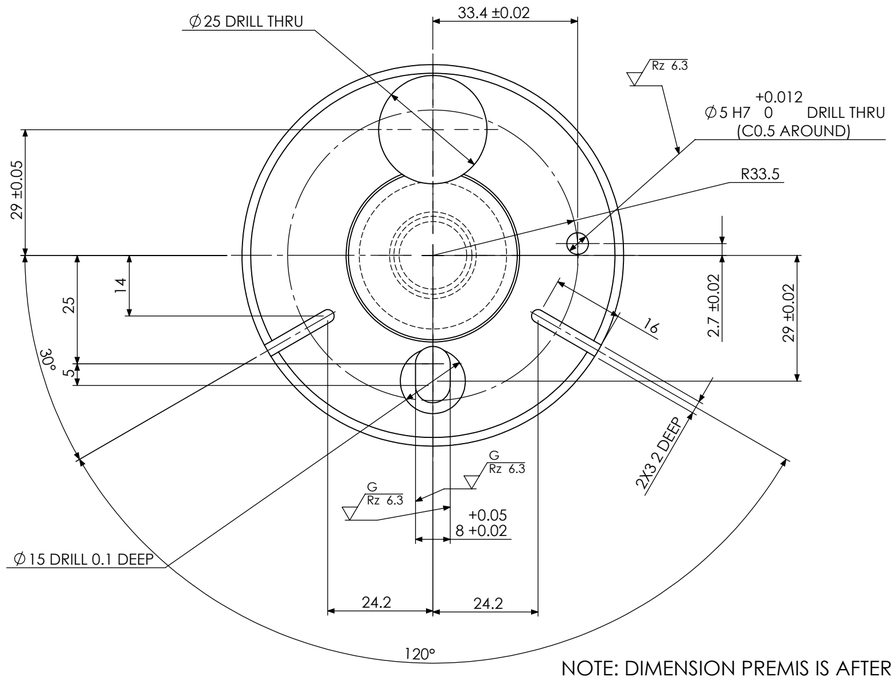

Rz 100 (Rz 25 Rz 6.3 G Rz 6.3)

NOTE: DIMENSION PREMIS IS AFTER PLATING

NOTE: ALL EDGES MUST BE C0.3 UNLESS OTHERWISE SPECIFIED

SURFACE TREATMENT	HEAT TREATMENT	WEIGTH
MICr-20 ± 4μm	HRC 61-63	
ALL PART	QT	

MATERIAL:	RESEMBLANCE PART No.	IMPO CODE	I/O CODE
SKD11 (ASTM A681 D2)			

PART NAME: JIG (7 GR EXH)

DENSO MEXICO

APPROVED	CHECKED	CHECKED	DESIGNED	DRAWN	DWG NO.		ASP CODE	SHEET
				RT	M-2815387-320	A2		1 OF 1
					QTY.: 1	No.: 32		SCALE:1:1

CONFIDENTIAL