NOTES:
1.) ALL STEEL TO BE ASTM A36 EXCEPT AS NOTED.
2.) WELDING MUST CONFORM TO CYCLICALLY (DYNAMICALLY) LOADED STRUCTURES OF THE AWS D1.1/D1.1M CODE.
3.) ALL SEAMS TO BE WELDED 6 [.25] CONTINUOUS FILLET UNLESS OTHERWISE SPECIFIED.
4.) ONLY QUALIFIED OR PREQUALIFIED WELDING PROCEDURE SPECIFICATIONS (WPS) MAY BE USED IN WELDING.
5.) WELDERS MUST BE CERTIFIED FOR THE PROCESS AND POSITION BEING USED.
6.) ALL WELDMENTS ARE SUBJECT TO VISUAL INSPECTION BY A C.W.I.
7.) REMOVE ALL BURRS AND SHARP EDGES.
8.) SURFACE PREPARATION AND PAINTING PROCEDURE SHOULD BE IN ACCORDANCE WITH APPLICABLE SECTIONS OF THE STRUCTURAL STEEL PAINT COUNCIL SPECIFICATIONS.
9.) ALL JOINTS & SURFACES TO BE LINED OR COVERED MUST BE IN ACCORDANCE WITH NACE STANDARD RP0178 (CURRENT REVISION).
10.) STAMP PART NO. USING 8 [.31] HIGH NUMERALS.
11.) DIMENSIONS SHOWN THUS [ ] ARE IN INCHES.
12.) # "G" IN PART NUMBER INDICATES PEDESTAL WITH GROUNDING PAD OPTION.

	ITEM NO.	ITEM QTY.	DESCRIPTION	MAT'L QTY.	PART NO.
	1	1	1.00" HR PL	222 LBS	WPL1.00
	2	1	1.00" HR PL	83 LBS	WPL1.00
	3	3	2.50" SCH 40 PIPE X "B" LG.	SEE CHART	WPE2.5X20
	4	2	DISCHARGE LUG	EA	21276
	5	3	1.25-7 UNC THREADED ROD	1.8 FT	ZTR1250MS
	6	1	2" NPT HALF COUPLING	EA	V1107
	7	3	LIFTING LUG	EA	45504
	8	1	.50" X 3.00" HR FLAT	1.0 FT	01239
	9	1	.50" X 3.00" HR FLAT	0.8 FT	01239
	10	1	.50" X 3.00" HR FLATE	0.6 FT	01239
	11	1	SHAFT GUARD	EA	ZBSG47-3343
*	12	1	GROUNDING PAD	EA	ZGP82141C23

* OPTIONAL: FOR USE WITH "G" OPTION.

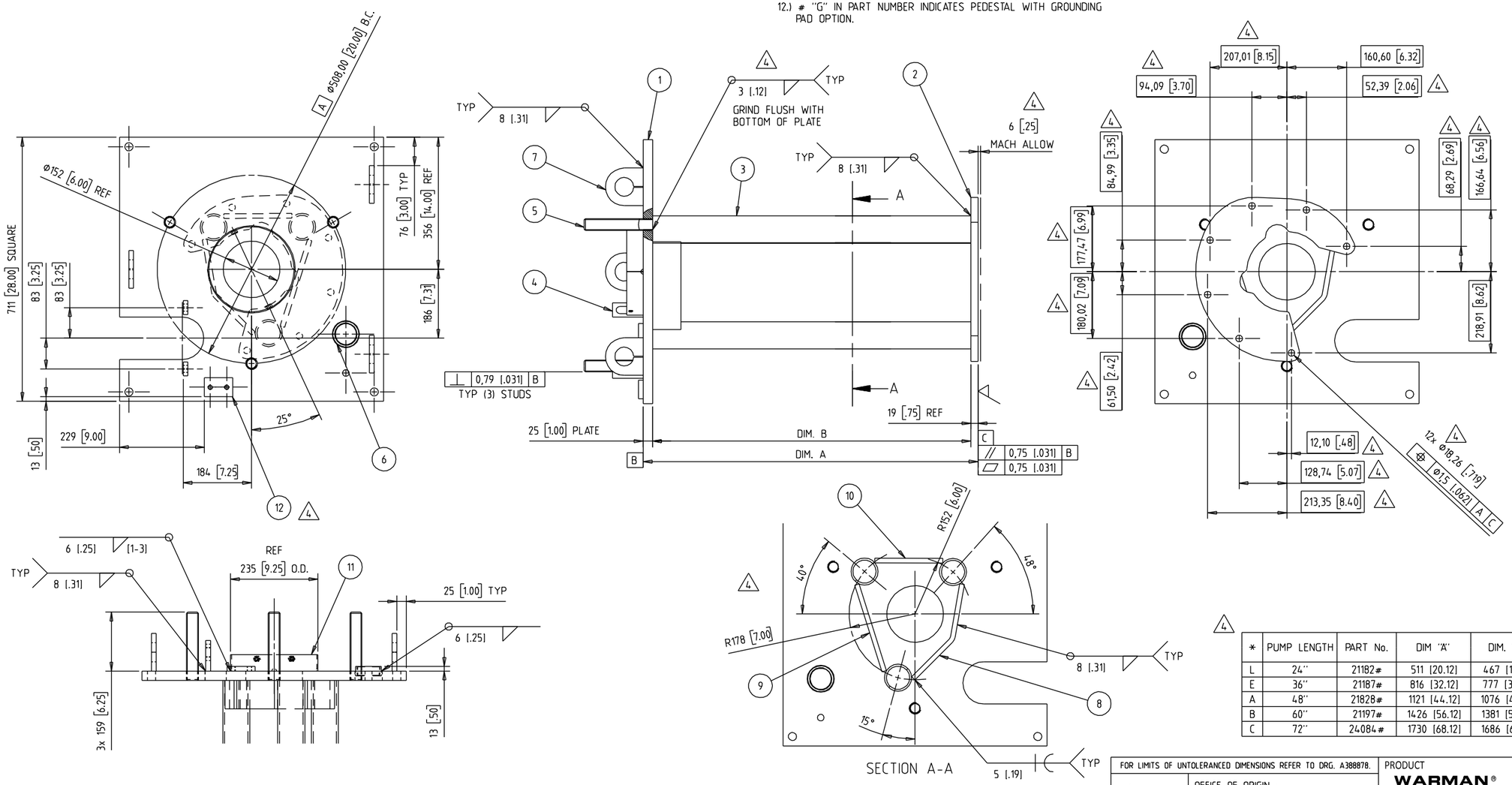

*	PUMP LENGTH	PART No.	DIM "A"	DIM. "B"	MAT'L QTY ITEM 3
L	24"	21182#	511 [20.12]	467 [18.38]	4.6 FT
E	36"	21187#	816 [32.12]	777 [30.38]	7.6 FT
A	48"	21828#	1121 [44.12]	1076 [42.38]	10.6 FT
B	60"	21197#	1426 [56.12]	1381 [54.38]	13.6 FT
C	72"	24084 #	1730 [68.12]	1686 [66.38]	16.6 FT

REV	DESCRIPTION	BY	DATE	CHK
4	ADDED SHEET #2; ADDED SECTION A-A; REVISED TABLE; ADDED GROUNDING PAD OPTION; REVISED NOTES; REVISED WELD SYMBOL; ADDED MACH ALLOW; UPDATED BOM WHERE SHOWN; ADDED DIM. WHERE SHOWN - DR119935MAD	KDS	APR.25,2014	EAK
3	ZBSG47-3343 WAS ZSG47-3343; CHANGED TOLERANCE BLOCK - DR109677MAD	AGS	JAN.7,2010	KDS
2	REDRAWN ON UG; ADDED ITEM #11 & RELATED INFO - DR102084MAD	SDA	FEB.6,2007	EAK
1	REDRAWN ON CAD; ITEM #8, 9 & 10 WERE #00848 - ECN051107	ENS	MAR.16,1998	DLO

FOR LIMITS OF UNTOLERANCED DIMENSIONS REFER TO DRG. A388878.

OFFICE OF ORIGIN : MADISON

SCALE: --
APP: AGS
CHK: DLO
DRN: ENS
DATE: MAR.16,1998
SHEET 1 OF 2

Copyright © Weir Slurry Group, Inc. 2014
Weir Slurry Group, Inc. ("The Company") is the owner of the copyright and all confidential information in this drawing.
The drawing must not be copied in whole or in part, in any form or by any means, and the information in it must not be disclosed to any person, or used for any purpose other than the specific purpose for which it has been provided, without the prior written consent of the Company.

PRODUCT
WARMAN®
Centrifugal Slurry Pumps

WEIR MINERALS

TITLE :
1-1/2" VERTICAL SUMP PUMP
PEDESTAL DETAIL

DRAWING No D1.5SH*5001
REV 4

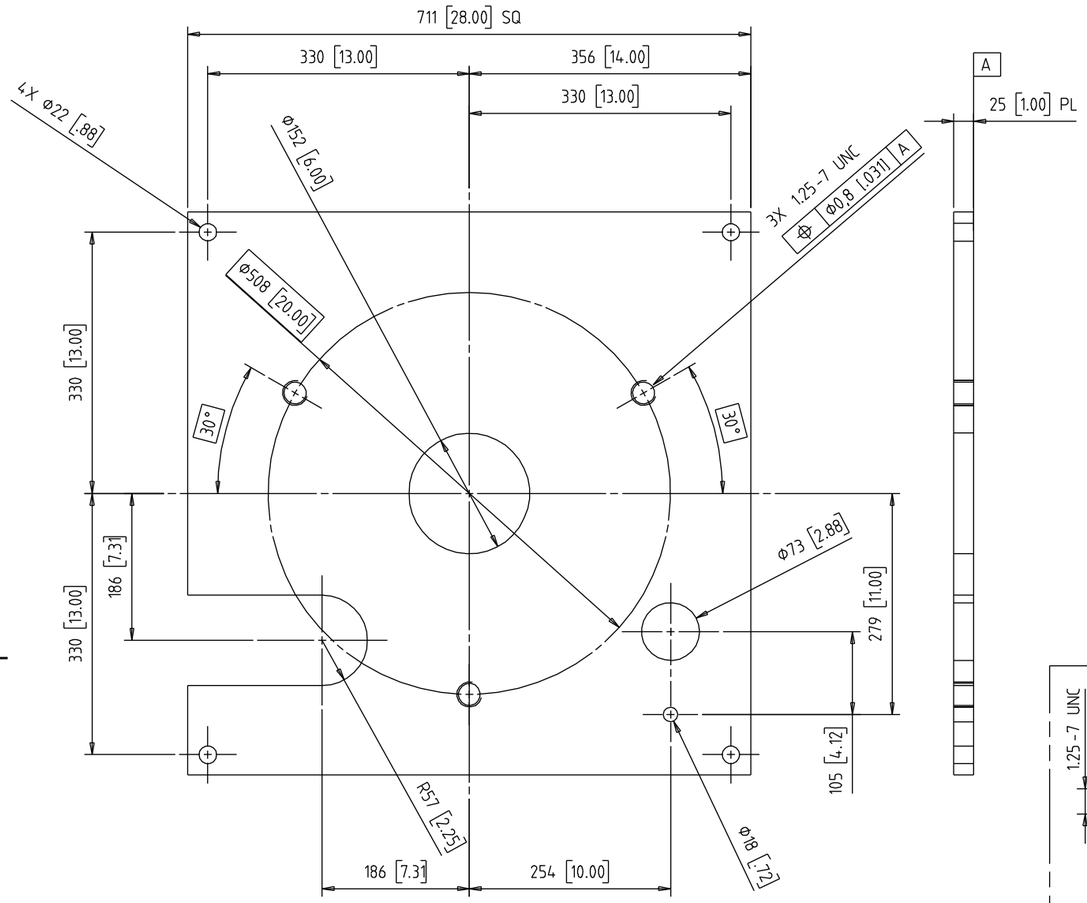

ITEM #1

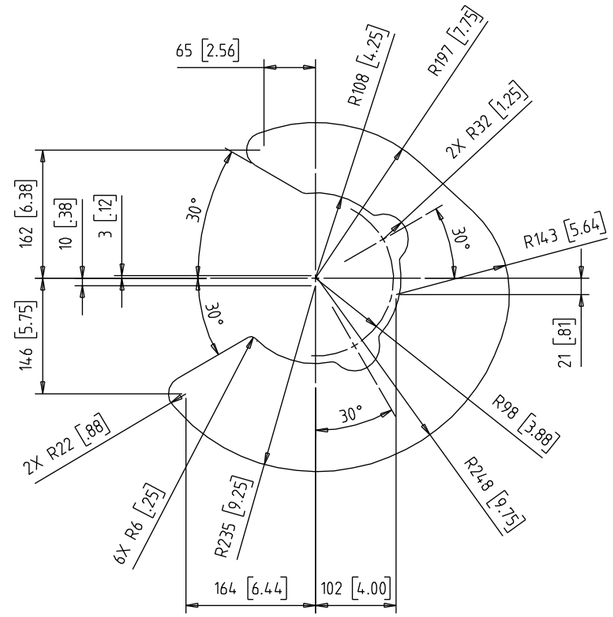

ITEM #2

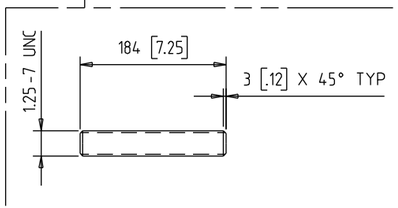

ITEM #5

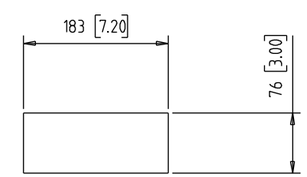

ITEM #10

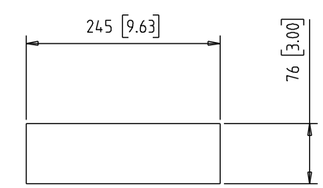

ITEM #9

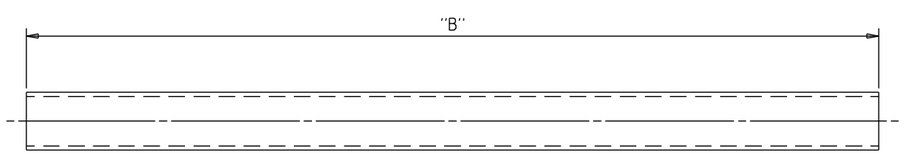

ITEM #3

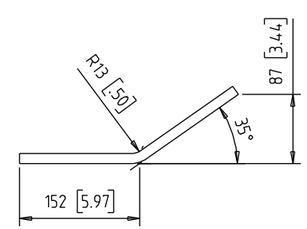

ITEM #8
FULLY FORMED

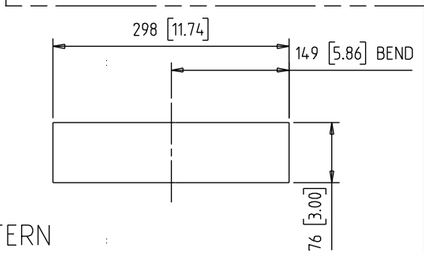

ITEM #8
FLAT PATTERN

REV	DESCRIPTION	BY	DATE	CHK
4	ADDED DETAILS TO SHEET #2; SEE SHEET #1 - DR119935MAD	KDS	APR.25,2014	EAK
3	SEE SHEET #1 - DR109677MAD	AGS	JAN.7,2010	KDS
2	SEE SHEET #1 - DR102084MAD	SDA	FEB.6,2007	EAK
1	SEE SHEET #1 - ECN051107	ENS	MAR.16,1998	DLO

FOR LIMITS OF UNTOLERANCED DIMENSIONS REFER TO DRG. A388878.

OFFICE OF ORIGIN : MADISON

SCALE: --
APP: AGS
CHK: DLO
DRN: ENS
DATE: MAR.16,1998
SHEET 2 OF 2

Copyright © Weir Slurry Group, Inc. 2014.
Weir Slurry Group, Inc. ("the Company") is the owner of the copyright and all confidential information in this drawing.

The drawing must not be copied in whole or in part, in any form or by any means, and the information in it must not be disclosed to any person, or used for any purpose other than the specific purpose for which it has been provided, without the prior written consent of the Company.

PRODUCT
WARMAN®
Centrifugal Slurry Pumps

WEIR MINERALS

TITLE :
1-1/2" VERTICAL SUMP PUMP
PEDESTAL DETAIL
TITLE LINE 3

DRAWING No D15SH*5001

REV 4