ITEM	QTY	DESCRIPTION	PART No.
1	1	SHAFT KEY	GAL-V1898
2	1	LOCKNUT, #TN-14	GAL-05183

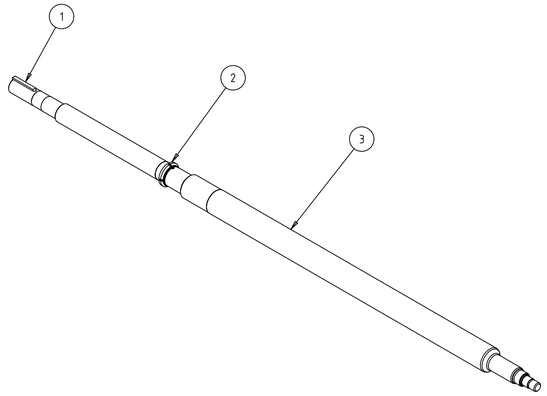

MATERIAL: WARMAN MATERIAL CODE E121 UNLESS OTHERWISE SPECIFIED.
ESTIMATED WEIGHT: 197 lbs

NOTE:
1.) MACHINED SURFACES ARE TO BE 125 RMS OR BETTER UNLESS OTHERWISE SPECIFIED.
2.) MAXIMUM ALLOWABLE RUNOUT ↗ IS .0005 PER FOOT OF LENGTH.
3.) ALL RADII TO BE R .031 UNLESS OTHERWISE SPECIFIED.
4.) DIMENSIONS ARE IN INCHES.

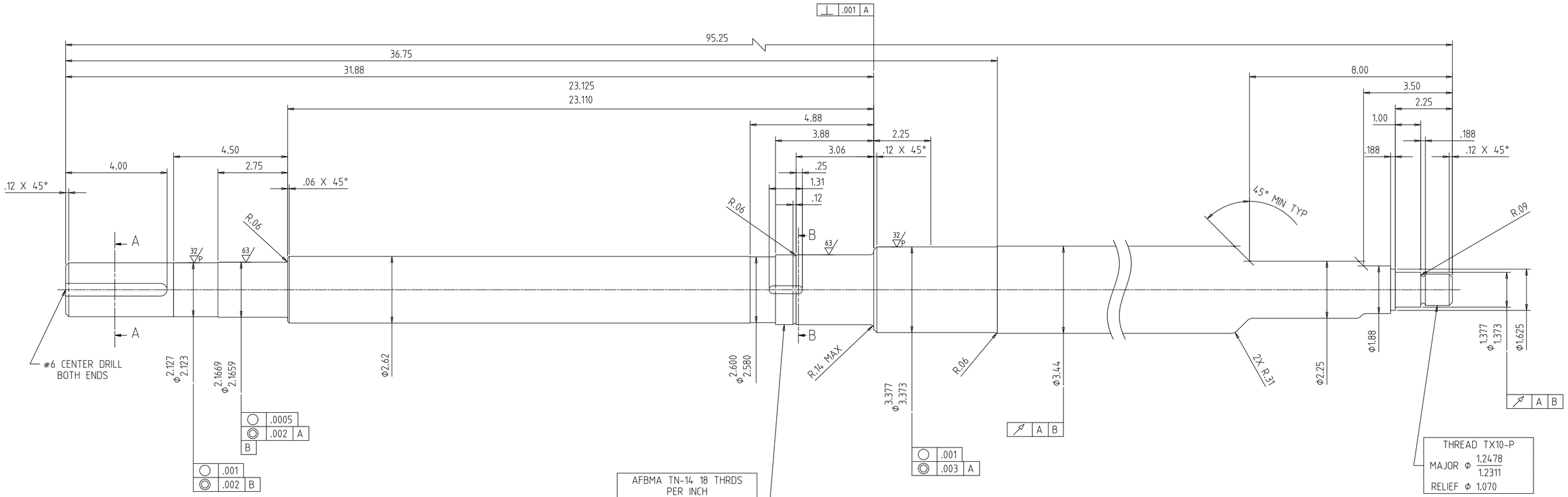

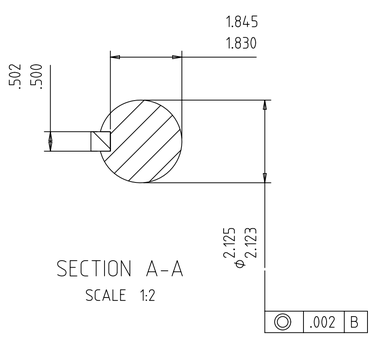

SECTION A-A
SCALE 1:2

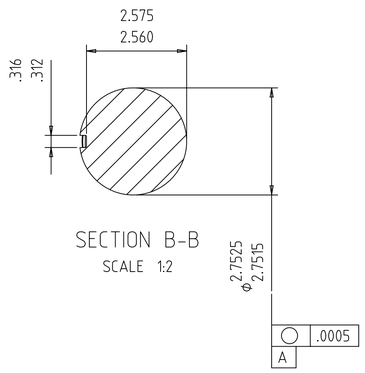

SECTION B-B
SCALE 1:2

REV	DESCRIPTION	DATE	REF NO	BY	CHK
7	47-3934 WAS D3SHK..5002-6	30MAR2021	PCN-07003113	KDS	JLS

FOR LIMITS OF UNTOLERANCED DIMENSIONS REFER TO DRG. A4-15895.

OFFICE OF ORIGIN : MADISON
DESIGN TEAM : SLURRY PUMP TECHNOLOGY GROUP

Copyright © Weir Slurry Group, Inc. 2021
Weir Slurry Group, Inc. ("the Company") is the owner of the copyright and all confidential information in this drawing.
The drawing must not be copied in whole or in part, in any form or by any means, and the information in it must not be disclosed to any person, or used for any purpose other than the specific purpose for which it has been provided, without the prior written consent of the Company.

SCALE:
APP: JLS
CHK: JLS
DRN: K. SCHMIDTKE
DATE: 30MAR2021
SHEET 1 OF 1

PRODUCT
WARMAN®
Centrifugal Slurry Pumps

WEIR Minerals

TITLE
SHAFT, GREY IRON, HIGH CHROME, 5000, #3, 60" LG
GAL-24675
MACHINING DETAIL

SHEET SIZE	DRAWING No	REVISION
A1	47-3934 △7	7