General Dimension Tolerance			
0 ~ 4	± 0.1	16 ~ 63	± 0.3
4 ~ 16	± 0.2	63 ~	± 0.5

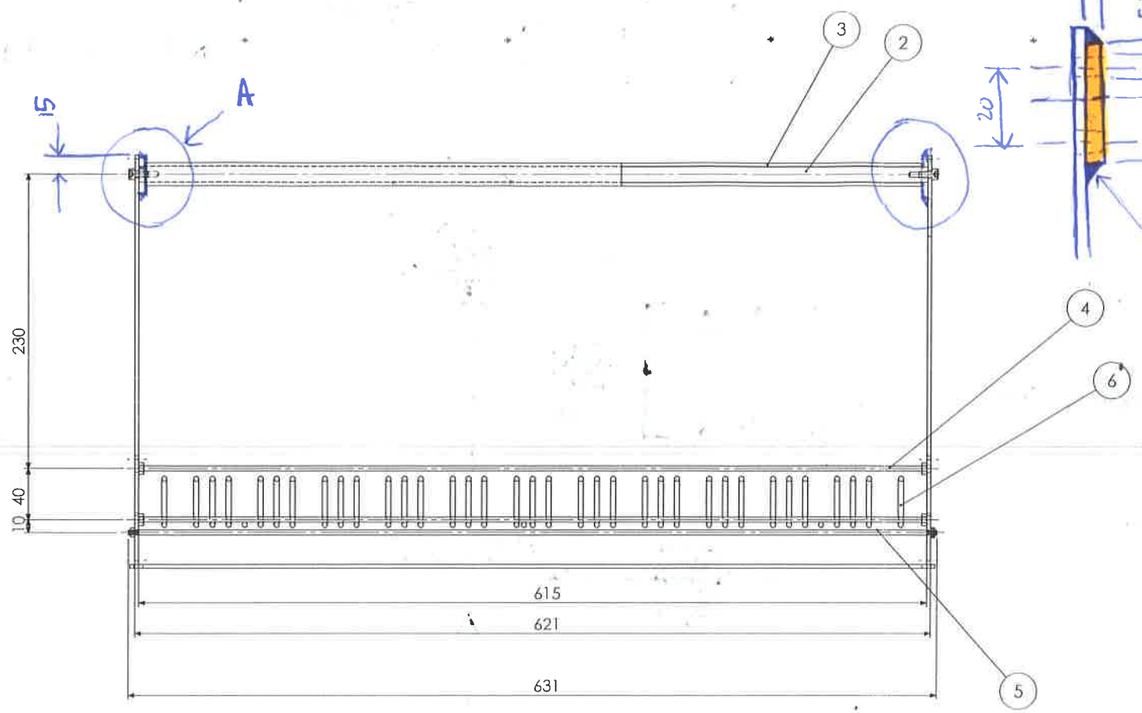

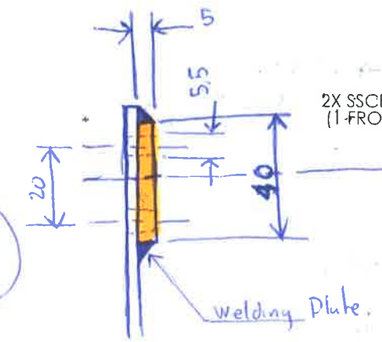

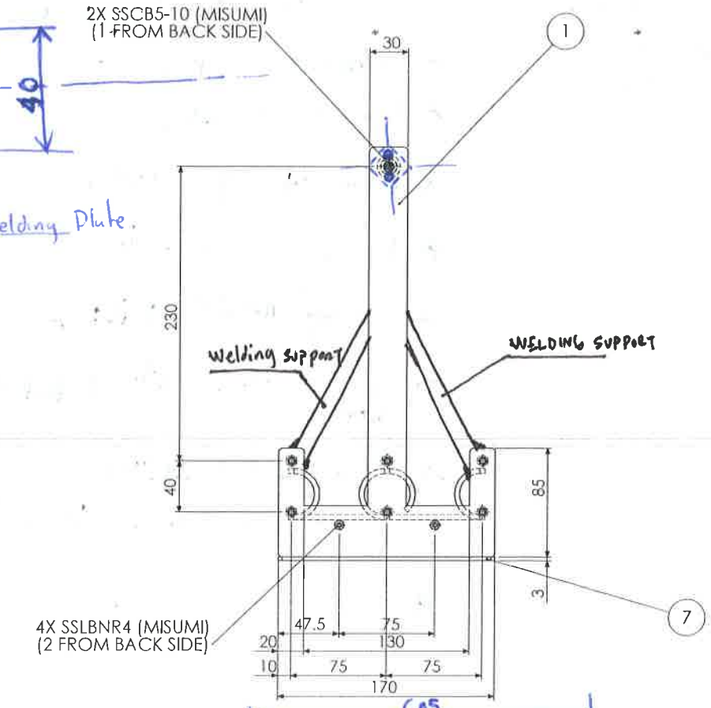

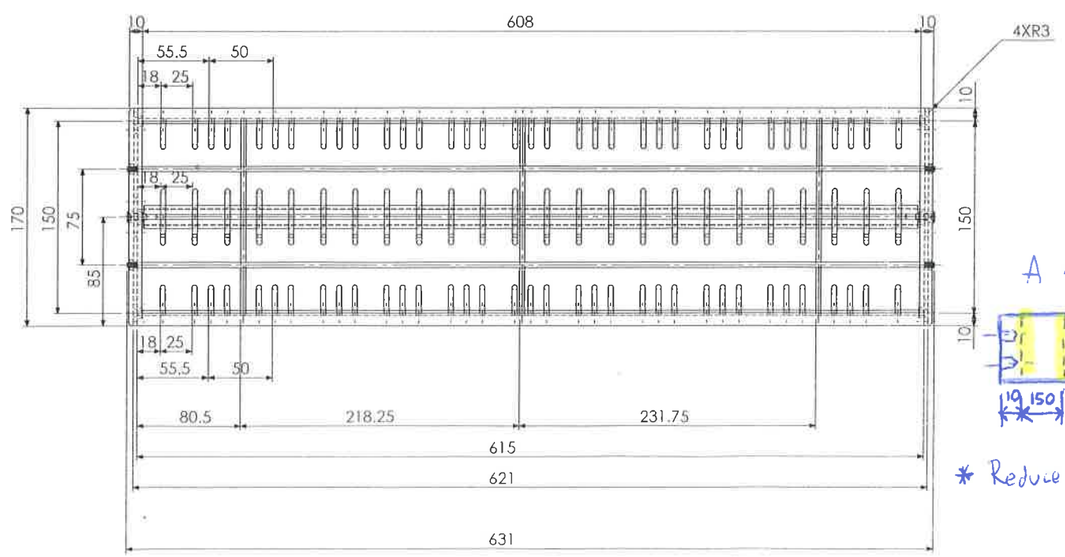

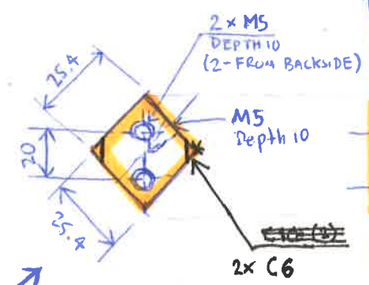

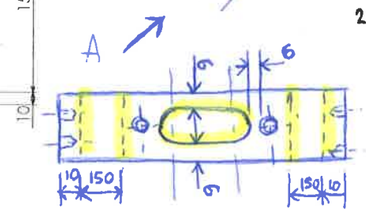

* Reduce weight Mod.

Material: Sus 316

NOTE: WELDED PART

SURFACE TREATMENT	HEAT TREATMENT	WEIGH
MATERIAL	ASSEMBLANCE PART No.	

BASKET

DENSO MEXICO

M-0010244-000 A2

CONFIDENTIAL