NAME	DATE	TIME (HRS)

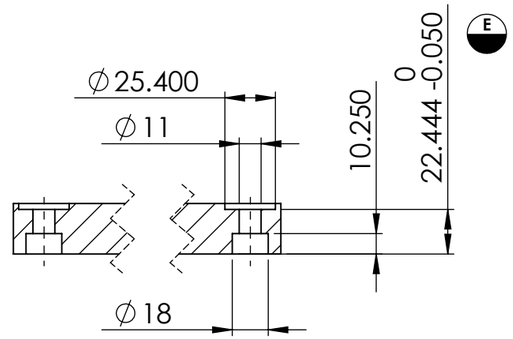

SECTION A-A

TAG	X LOC	Y LOC	SIZE
A1	-112.775	-60.441	∅ 6.600 THRU ⌴ ∅ 11 ↧ 6.250
A2	-112.775	-44.566	
C1	-107.442	-11.113	∅ 5 THRU M6x1.0 - 6H THRU
C2	-107.442	11.113	
C3	-76	-73	
C6	-50.600	-73	
C7	55.217	-35.725	
C8	80.617	-35.725	
C9	107.442	-11.113	
C10	107.442	11.113	

TAG	X LOC	Y LOC	SIZE
D1	10	-85	∅ 9 THRU ⌴ ∅ 15 ↧ 8.250
D2	-25	-55	
D3	-25	55	
D4	25	-55	
D5	25	55	
D6	-10	85	
E1	2.500	-55	∅26.988 THRU
E2	2.500	55	

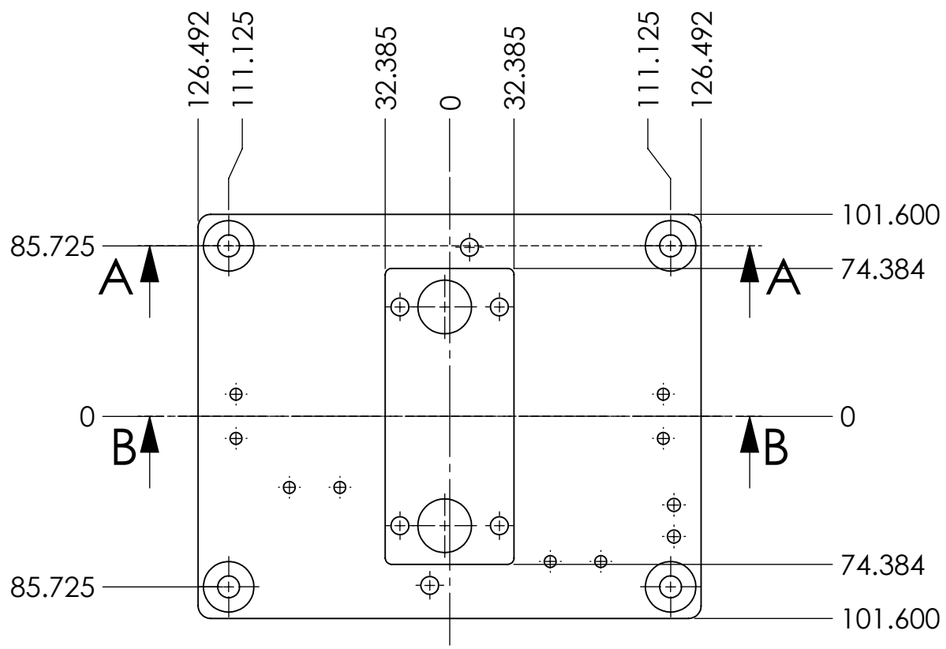

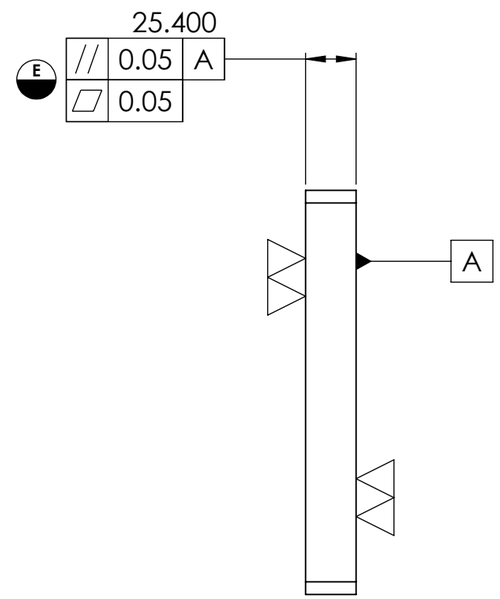

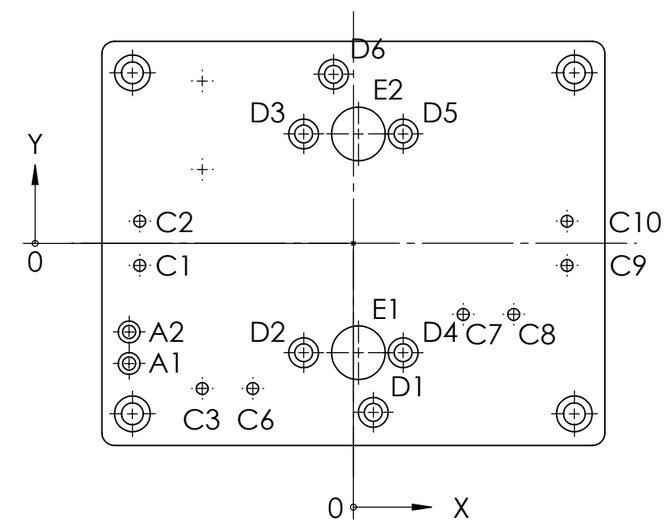

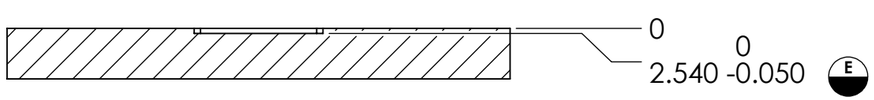

SECTION B-B

TOQ008-MVA-501-001

PAG. 1 de 1

E MEDIDA ESPECIAL

ALL TECHNICAL DATA DISCLOSED HERE IN IS THE PROPERTY OF JOYSON SAFETY SYSTEMS AND SHALL NOT BE USED BY ANY OTHER MANUFACTURER, PROCUREMENT OR DISCLOSURE WITHOUT WRITTEN PERMISSION OF THE OWNMER.

JOYSON
EQUIPO AUTOMOTRIZ AMERICANA S.A. DE C.V.
BOLSAS DE AIRE
NOMBRE RM
FIRMA

AUTHORIZE | TALLER | QUALITY

NOTES:
Pieza libre de filos y rebabas.

TOTAL OF PIECES	1 Pza.
ANG. PROF	

REV	DESCRIPTION	DATE	APPROVED

REVIEWS

UNLESS OTHERWISE SPECIFIED

TOLERANCES DIMENSIONS	ISO 2768-1 mK-E ASME Y14.5M-1994	
MM	INCHES	ANGLES
+.1 -.1	+.004 -.004	+1° -1°

MATERIAL:	6061 Aluminium
SURFACE TREATMENT	Anodizado
HARDNESS	N.A.

JOYSON SAFETY SYSTEMS

APPROVALS		DATE
DESIGNER	ABG	1/31/2022
REVIEW	RVM	1/31/2022

JOYSON TECHNICAL CENTER

MODEL NAME	TOQ008-MVA	SERIES No	M2022-004
MACHINE NAME	QCF Tooling VOLVO		
PART NUMBER	TOQ008-MVA-501-001		
SIZE B	PART NAME TOQ008-MVA-501-001		REV. A
ESCALE: 1:3		DRAWING IN MILLIMETERS	

JSSAM-JTC-MF-FM-0002