ITEM	QTY	DESCRIPTION	PART No.
1	1	REQ, PEDESTAL	GAL-218898

MATERIAL: WARMAN MATERIAL CODE E02 UNLESS OTHERWISE SPECIFIED
ESTIMATED WEIGHT: 425 lbs

NOTES:
1.) STAMP PART NUMBER USING .31 HIGH NUMERALS.
2.) DIMENSIONS ARE IN INCHES.

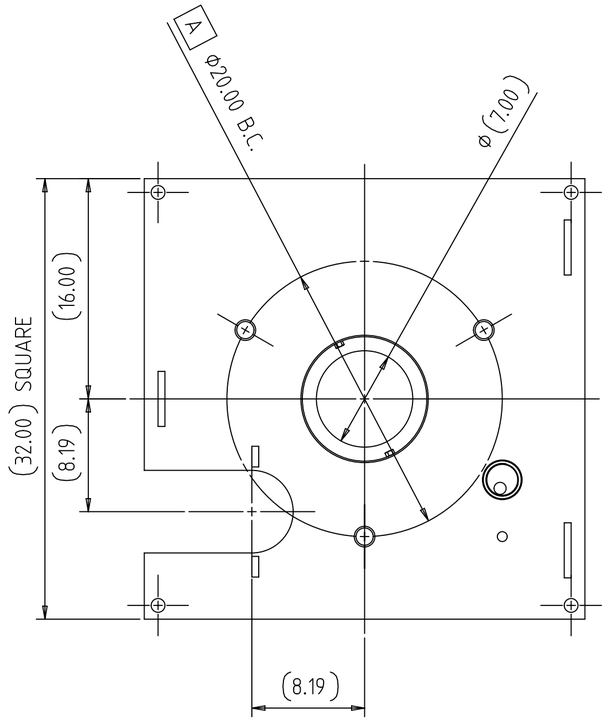

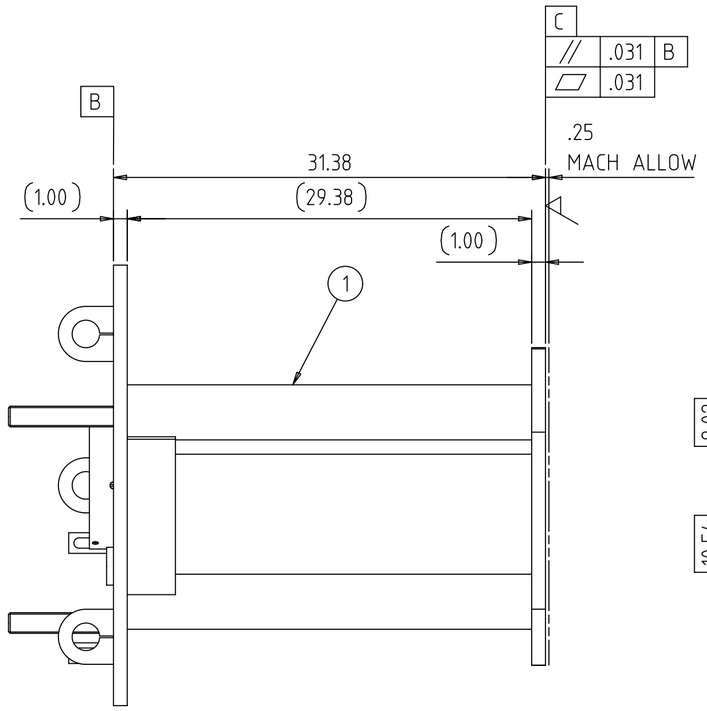

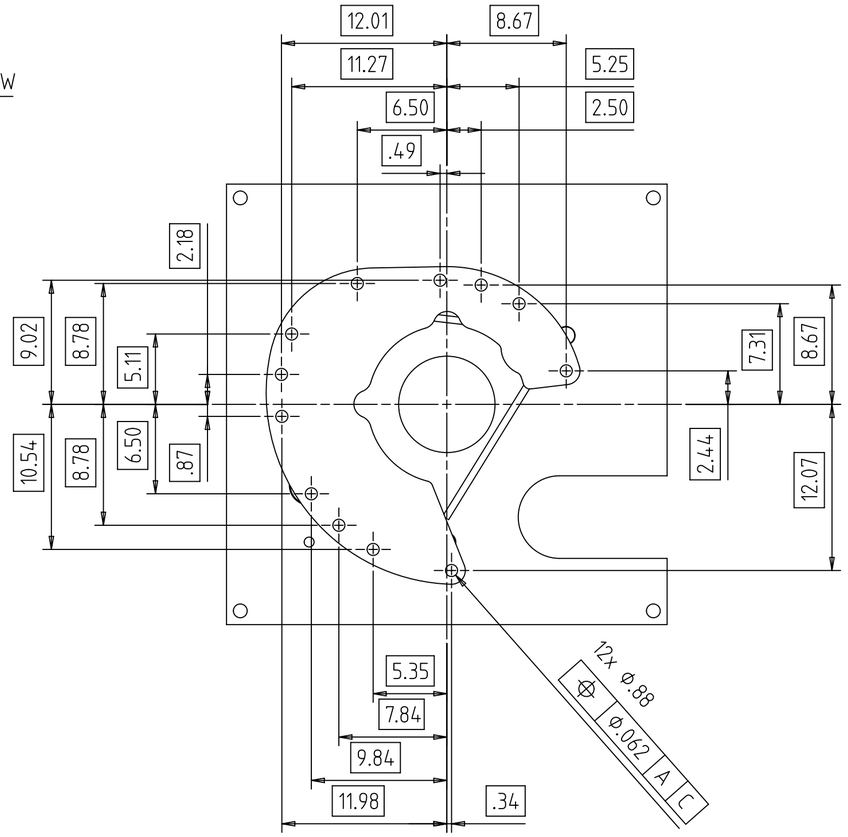

REV	DESCRIPTION	DATE	REF NO	BY	CHK
10	47-3783 WAS D3SH_5001	08OCT2020	PCN-07001773	KDS	JLS

FOR LIMITS OF UNTOLERANCED DIMENSIONS REFER TO DRG. A4-15895.

OFFICE OF ORIGIN : MADISON

SCALE: 1:8
APP: JLS
CHK: JLS
DRN: K. SCHMIDTKE
DATE: 08OCT2020
SHEET 1 OF 1

Copyright © Weir Slurry Group, Inc. 2020
Weir Slurry Group, Inc. ("the Company") is the owner of the copyright and all confidential information in this drawing.

The drawing must not be copied in whole or in part, in any form or by any means, and the information in it must not be disclosed to any person, or used for any purpose other than the specific purpose for which it has been provided, without the prior written consent of the Company.

PRODUCT
WARMAN®
Centrifugal Slurry Pumps

WEIR Minerals

TITLE
PEDESTAL, 3", GREY IRON, 5000, SHAFT UP, 36" LG
GAL-21546
MACHINING DETAIL

SHEET SIZE	DRAWING No	REVISION
A2	47-3783	10