General Dimension Tolerance			
0 ~ 4	±0.1	16 ~ 63	±0.3
4 ~ 16	±0.2	63 ~	±0.5

REVISIONS			
REV.	DESCRIPTION	DATE	APPROVED
1	IMPROVEMENT FOR L9	12/17/2021	PERLA T.

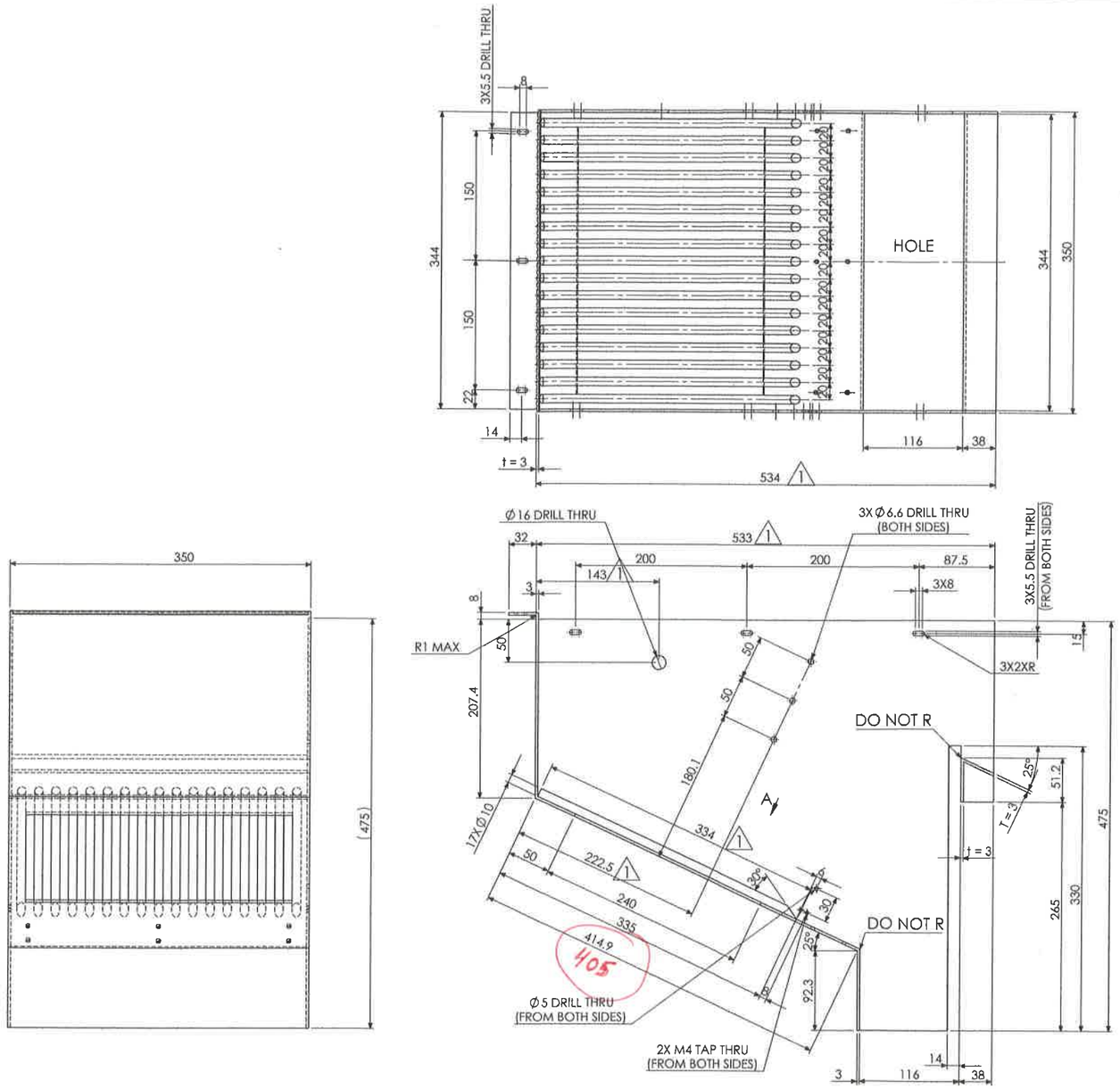

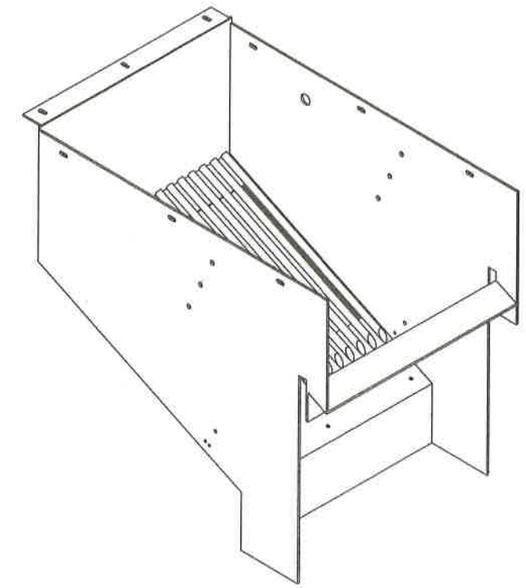

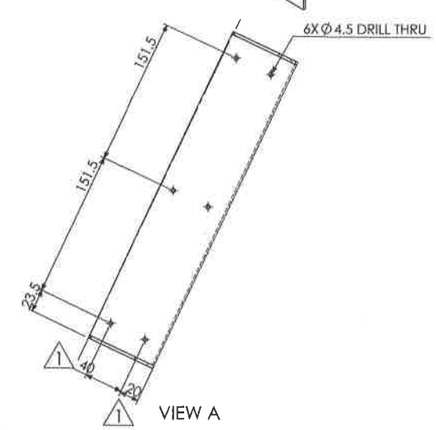

NOTE: BENDING PART
NOTE: WELDED PART
NOTE: ALL EDGES MUST BE C0.5 UNLESS OTHERWISE SPECIFIED

SURFACE TREATMENT	HEAT TREATMENT	WEIGTH

MATERIAL:	RESEMBLANCE PART No.	IMPO CODE	VO CODE
SUS 304 (AISI 304)			

PART NAME: BUCKET

DENSO MEXICO

APPROVED	CHECKED	CHECKED	DESIGNED	DRAWN
				RT

DWG NO. M-5043080-021 | A2 | ASP CODE | SHEET 1 OF 1

QTY.: 1 | No.: 2 | SCALE:1:4

CONFIDENTIAL