General Dimension Tolerance			
0 ~ 4	± 0.1	16 ~ 63	± 0.3
4 ~ 16	± 0.2	63 ~	± 0.5

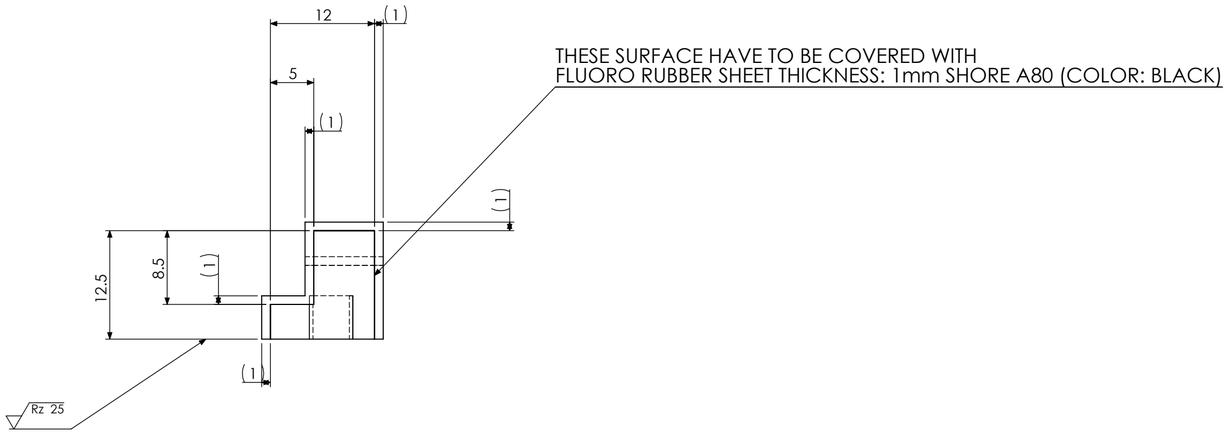

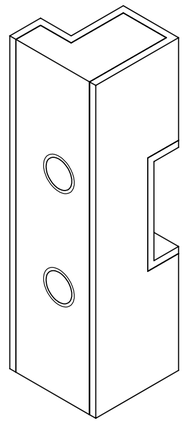

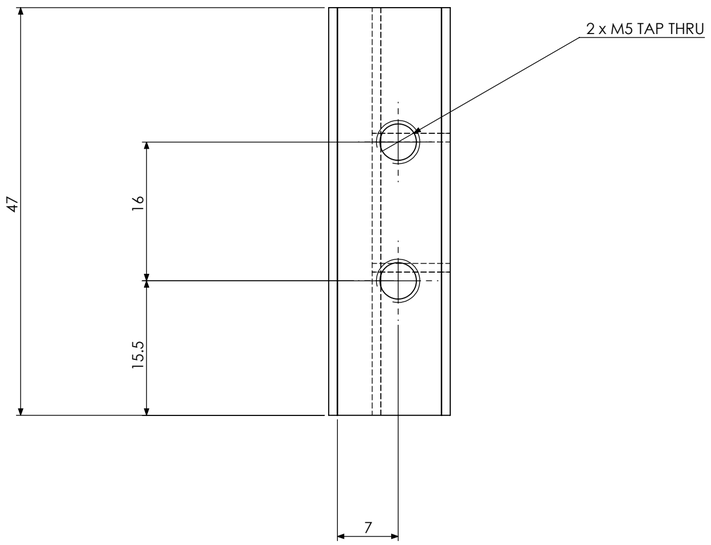

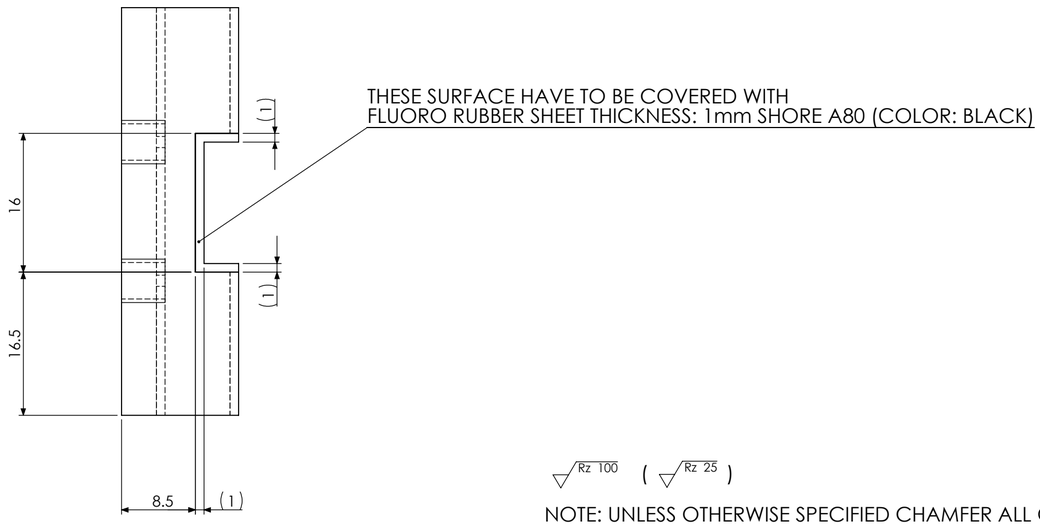

Rz 100 (Rz 25)

NOTE: UNLESS OTHERWISE SPECIFIED CHAMFER ALL CORNERS TO C0.5

SURFACE TREATMENT	HEAT TREATMENT	WEIGTH	
MATERIAL:	RESEMBLANCE PART No.	IMPO CODE	I/O CODE
A7075BD-T6 (AISI 7075-T651)			
PART NAME	BLOCK		
DENSO MEXICO	DWG NO. M-0910729-121	A2	ASP CODE / SHEET 1 OF 1
APPROVED / CHECKED / CHECKED / DESIGNED JAIR DAVILA / DRAWN HIRAM MENDIAS	QTY.: 2	No.: 12	SCALE:5:1

CONFIDENTIAL