NAME	DATE	TIME (HRS)

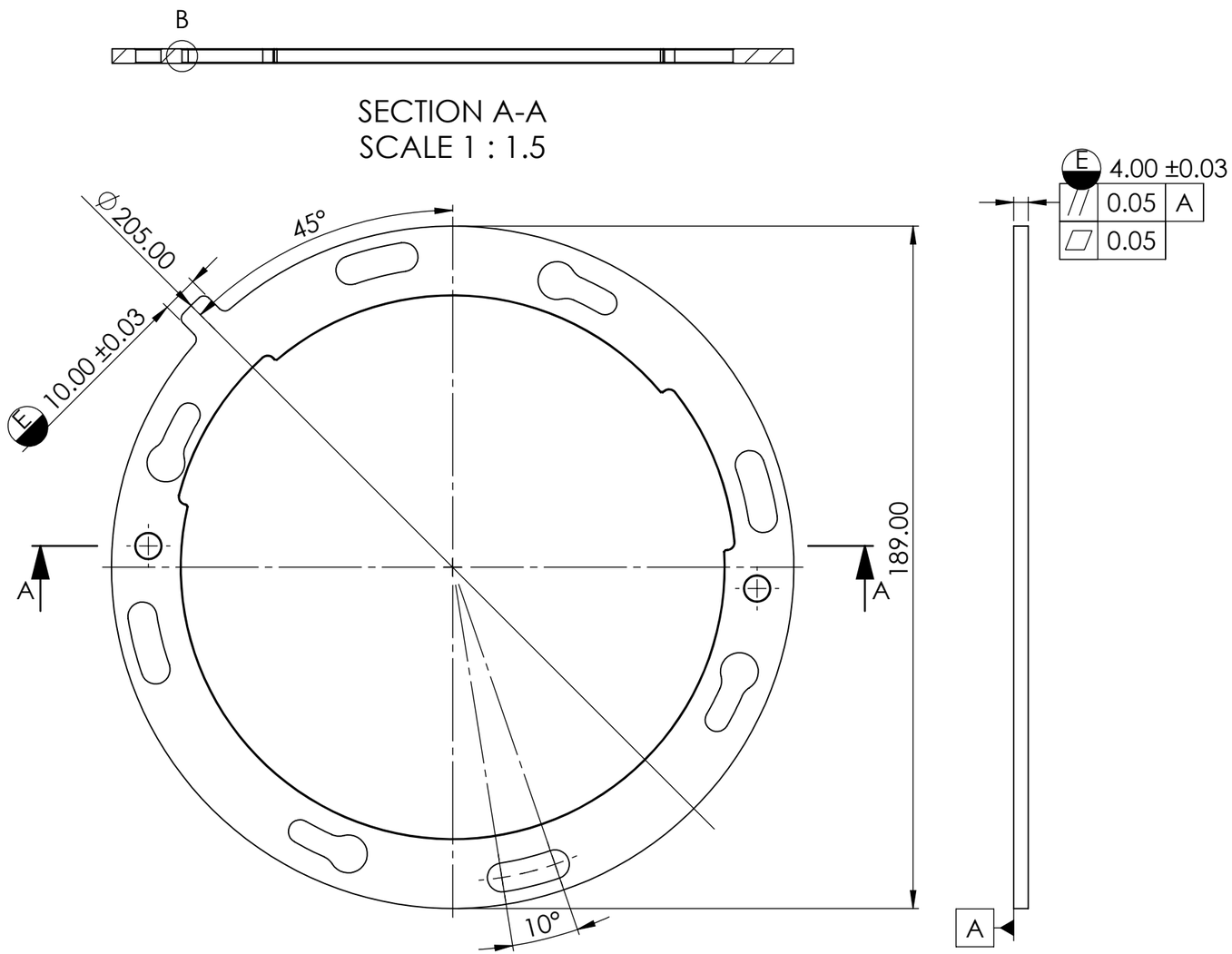

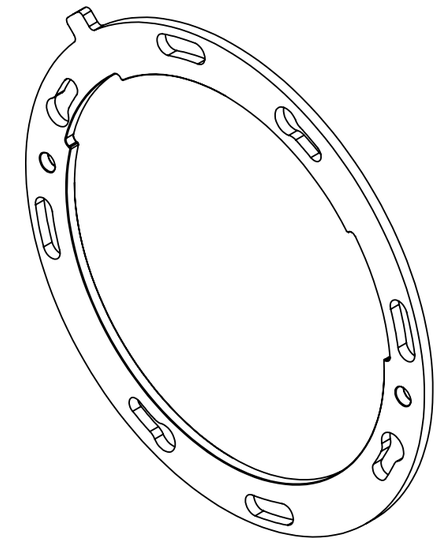

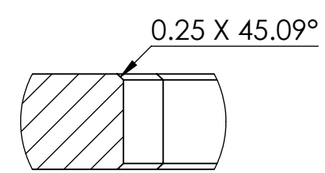

DETAIL B
SCALE 4 : 1

CARB01-AC-100-003

PAG. 1 de 2

E MEDIDA ESPECIAL

ALL TECHNICAL DATA DISCLOSED HERE IN IS THE PROPERTY OF JOYSON SAFETY SYSTEMS AND SHALL NOT BE USED BY ANY OTHER MANUFACTURER, PROCUREMENT OR DISCLOSURE WITHOUT WRITTEN PERMISSION OF THE OWNMER.

AUTHORIZE	TALLER	QUALITY

NOTES:
Pieza libre de filos y rebabas.

TOTAL OF PIECES	1 Pza.
ANG. PROF	

REV	DESCRIPTION	DATE	APPROVED

REVIEWS

UNLESS OTHERWISE SPECIFIED

TOLERANCES DIMENSIONS	ISO 2768-1 mK-E ASME Y14.5M-1994	
MM	INCHES	ANGLES
+.1 -.1	+.004 -.004	+1° -1°

MATERIAL:	4140T Steel
SURFACE TREATMENT	Electroless Nickel
HARDNESS	N.A.

JOYSON SAFETY SYSTEMS

APPROVALS		DATE
DESIGNER	LGG	11/01/2022
REVIEW	RVM	11/01/2022

JOYSON TECHNICAL CENTER

MODEL NAME	SERIES No
MACHINE NAME	
PART NUMBER	CARB01-AC-100-003

SIZE	PART NAME	REV.
B	Cartridge Locking Plate	**A**

ESCALE: 1:2 — DRAWING IN MILLIMETERS

JSSAM-JTC-MF-FM-0002

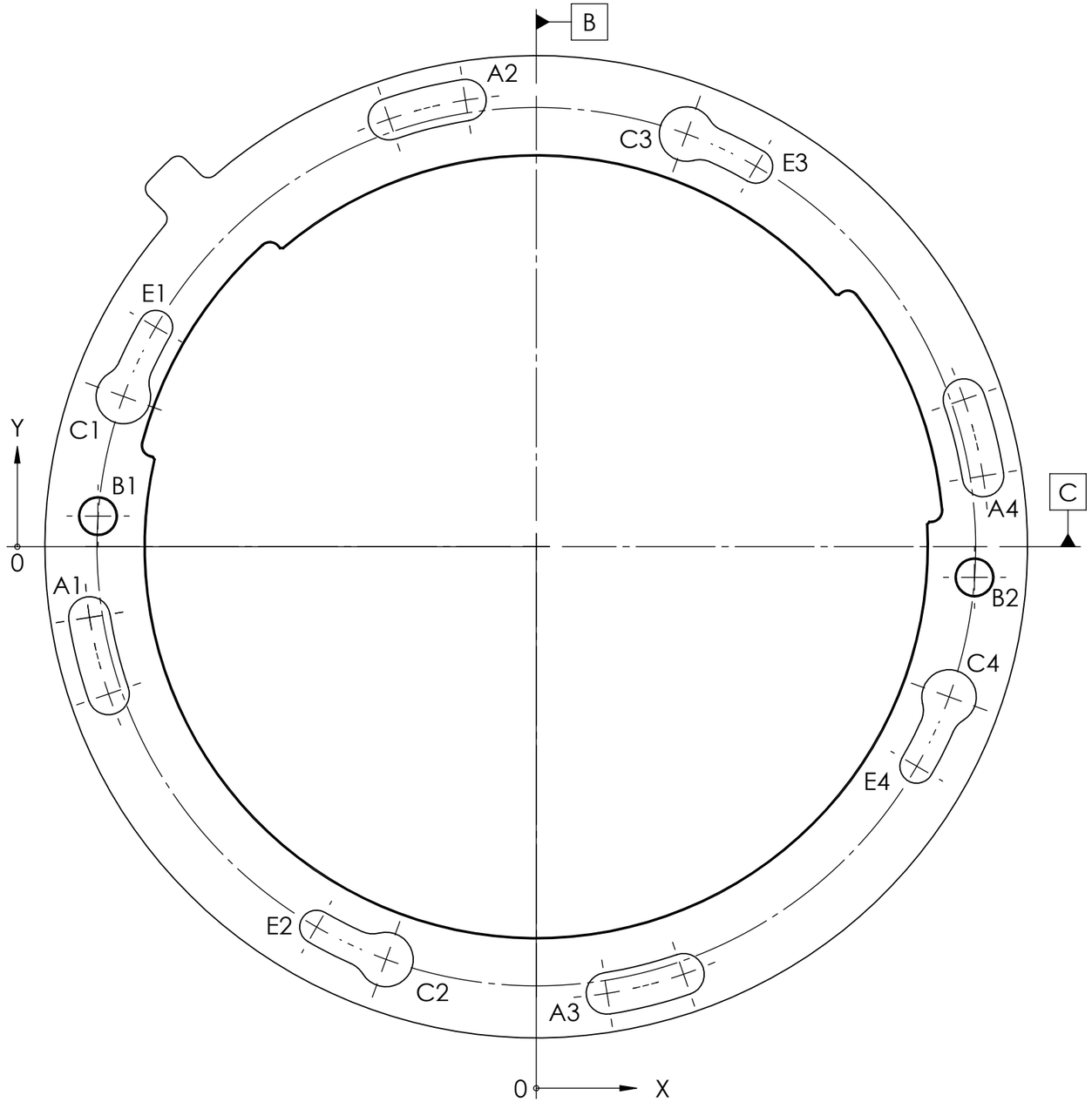

TAG	X LOC	Y LOC	SIZE	GEOMETRIC TOLERANCE
A1	-84.42	-21.05	8.00 X 23.17	⌖ 0.05 A B C
A2	-21.05	84.42		
A3	21.05	-84.42		
A4	84.42	21.05		
B1	-84.29	5.89	E ∅ 7.00 +0.05 0.00 THRU ALL ∅ 7.50 X 90°, Near Side ∅ 7.50 X 90°, Far Side	
B2	84.29	-5.89		
C1	-79.40	28.90	E ∅ 10.50±0.05 THRU ALL	⌖ 0.05 A B C
C2	-28.90	-79.40		
C3	28.90	79.40		
C4	79.40	-28.90		
E1	-73.18	42.25	E ∅ 6.50 ±0.05 THRU	⌖ 0.05 A B C
E2	-42.25	-73.18		
E3	42.25	73.18		
E4	73.18	-42.25		

CARB01-AC-100-003

PAG. 2 de 2

E MEDIDA ESPECIAL

ALL TECHNICAL DATA DISCLOSED HERE IN IS THE PROPERTY OF JOYSON SAFETY SYSTEMS AND SHALL NOT BE USED BY ANY OTHER MANUFACTURER, PROCUREMENT OR DISCLOSURE WITHOUT WRITTEN PERMISSION OF THE OWNMER.

AUTHORIZE | TALLER | QUALITY

NOTES:
Pieza libre de filos y rebabas.

TOTAL OF PIECES: 1 Pza.
ANG. PROF

REV	DESCRIPTION	DATE	APPROVED

REVIEWS

UNLESS OTHERWISE SPECIFIED
TOLERANCES DIMENSIONS: ISO 2768-1 mK-E ASME Y14.5M-1994

MM	INCHES	ANGLES
+.1 -.1	+.004 -.004	+1° -1°

MATERIAL: 4140T Steel
SURFACE TREATMENT: Electroless Nickel
HARDNESS: N.A.

JOYSON SAFETY SYSTEMS

APPROVALS		DATE
DESIGNER	LGG	11/01/2022
REVIEW	RVM	11/01/2022

JOYSON TECHNICAL CENTER

MODEL NAME | SERIES No
MACHINE NAME
PART NUMBER: CARB01-AC-100-003
SIZE: **B** | PART NAME: Cartridge Locking Plate | REV.: **A**
ESCALE: 1:2 | DRAWING IN MILLIMETERS