| NO. | REQUIREMENT (REQT.) | STANDARD:DATE | C | M | R | F |
|---|---|---|---|---|---|---|
| 1 | DRAWN ACC. TO: | JSS-GLOBAL-EN-ST-0010 | | | | |
| 2 | BANNED SUBSTANCES AND SUBSTANCES REQUIRING APPROVAL ACC. TO: | GADSL & GREEN GUIDELINE | | | | |
| 3 | WELDING FOR ALL PLATES AND BLOCKS: FILLET WELDS (NOT SHOWN) PER CURRENT PRACTICE | | | | | |

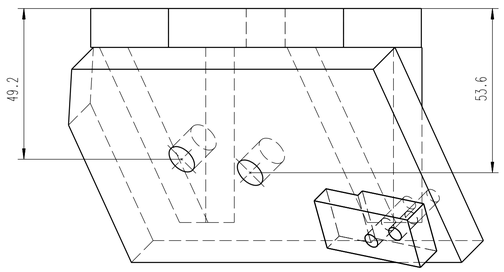


ISO 1:3

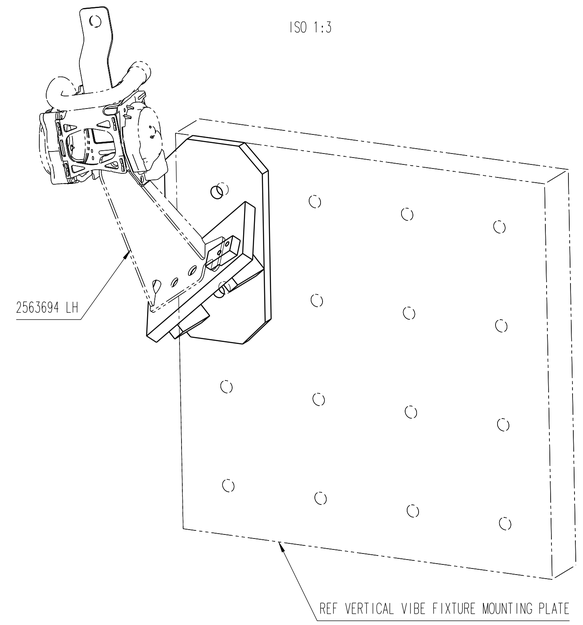


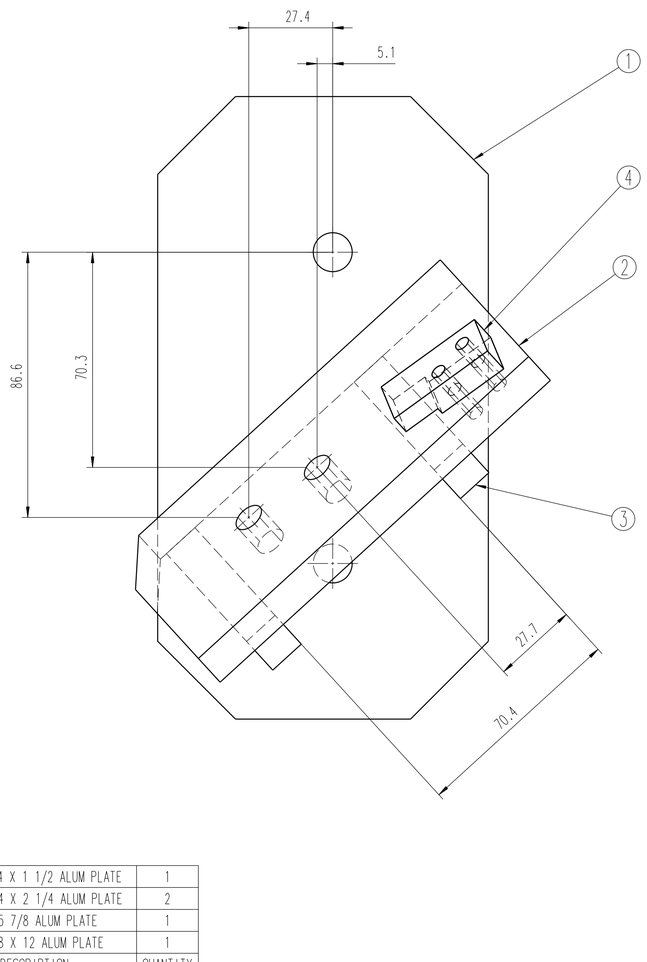


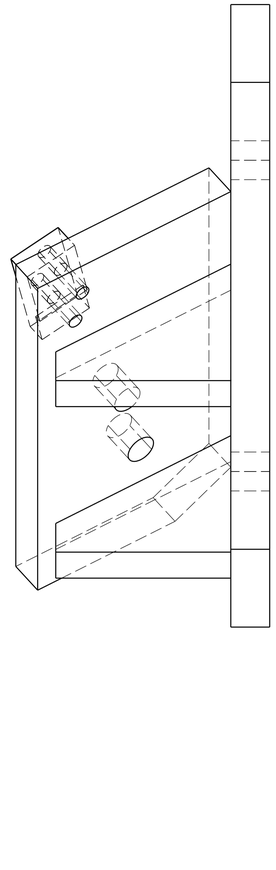

| | | |
|---|---|---|
| F2000531-0 | SB RR LH VERTICAL VIBRATION FIXTURE | |
| PART NO. | PART NAME | REMARKS |
| PART INFORMATION | | |

| | | | |
|---|---|---|---|
| 0 | RELEASED FOR DEVELOPEMENT | 2022-04-07 | PFONK |
| DWG. REV. | REVISION RECORD | DATE | DESIGN |

GENERAL TOLERANCES ISO 22081

X.X | X | X | X

TEDS ACCORDING TO CAD MODEL

JOYSON SAFETY SYSTEMS

ISO STANDARD METRIC UNITS

DOCUMENT CONTROLLED ELECTRONICALLY,
CONFIRM STATUS IN PLM SYSTEM BEFORE USE;
SEE PLM FOR APPROVALS & REVISION RECORD HISTORY

CONFIDENTIAL / COPYRIGHT RESERVED PER ISO16016

| | | |
|---|---|---|
| DRAWING NAME: | SB RR LH VERTICAL VIBRATION FIXTURE | SCALE 1:1 |
| DRAWING NO.: | F2000531-0 | SHEET 1/2 |

| REF | DESCRIPTION | QUANTITY |
|---|---|---|
| 4 | 3/8 X 3/4 X 1 1/2 ALUM PLATE | 1 |
| 3 | 1/2 X 2 1.4 X 2 1/4 ALUM PLATE | 2 |
| 2 | 1/2 X 3 X 5 7/8 ALUM PLATE | 1 |
| 1 | 1/2 X 4 3/8 X 12 ALUM PLATE | 1 |

App.: N/A
Std.Chk.: N/A
Des.Chk.: bgravelle

CATIA V5 LAST I.D. SYMBOL USED: Y17 I.D. SYMBOLS REMOVED: NONE

RELEASED: EO#2021863-E: 2022-05-25