Copia generada por: Ernesto Ricardo Morales Rodriguez
FECHA DE IMPRESION: 06/04/2022
AGN - ADMINISTRACION DE DIBUJOS NETWORK

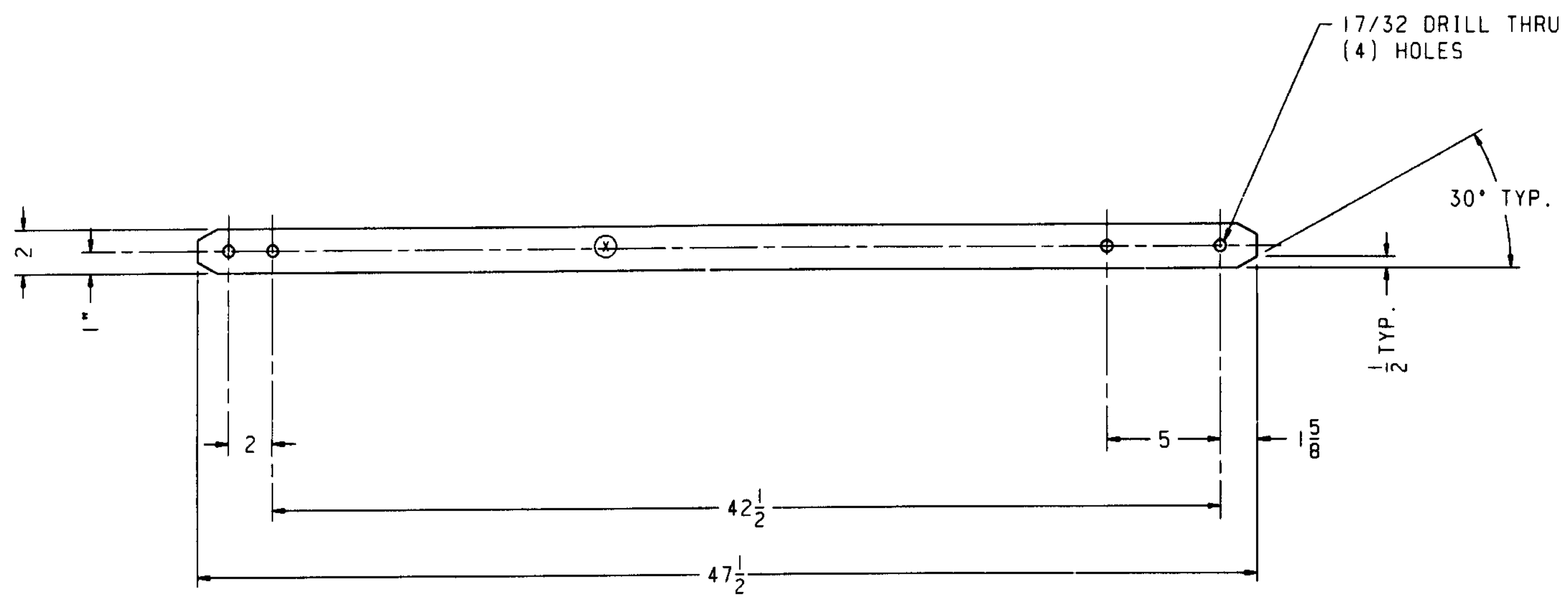

FLAT VIEW

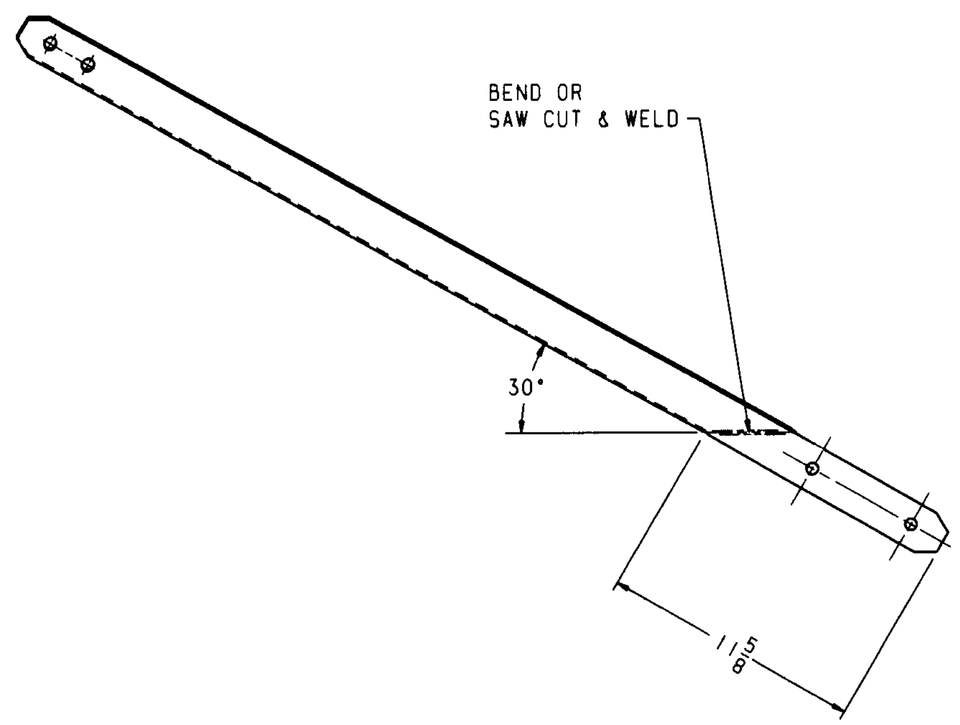

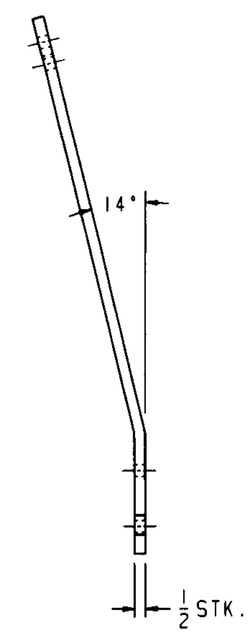

USED ON ASSEMBLY NO. HF-0366

					CHANGES

"INFORMATION CONTAINED HEREIN CONSTITUTES PROPRIETARY CONFIDENTIAL INFORMATION OF OWENS-ILLINOIS, AND IS TO BE ACCEPTED ONLY SUBJECT TO THAT UNDERSTANDING. IT IS TO BE KEPT CONFIDENTIAL AND NOT COPIED, USED, OR CONVEYED TO OTHERS WITHOUT OWENS-ILLINOIS' WRITTEN AUTHORIZATION."

UNLESS SPECIFIED:
FINISHED SURFACE ROUGHNESS 125 √
FINISHED DIMENSIONS-FRACTIONAL ±.015
DECIMAL ±.005
BREAK SHARP EDGES
MARK PART NUMBER AT (x)

NAME BRACE - L.H.

DRAWN	CHECKED	DATE	SCALE
PA/RLB	PA/JWC	10/26/95	1/4

MATERIAL AISI 1018 C.R.S.

OWENS-BROCKWAY
GLASS CONTAINERS, a unit of Owens-Illinois
DRAWING NUMBER
HF-5849
SHEET ___