NAME	DATE	TIME (HRS)

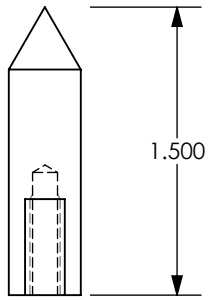

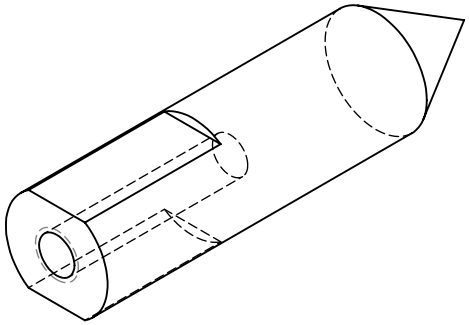

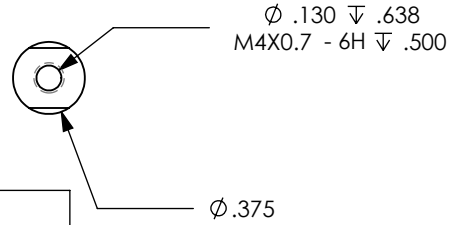

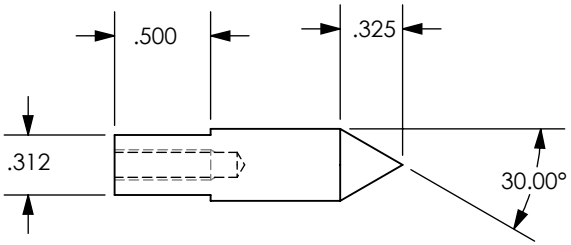

QUALITY

AUTHORIZE | TALLER

NOTES:
DEJAR PUEZA LIBRE DE REBABA Y MATAR FILOS.

TOTAL OF PIECES	1 PIEZA
ANG. PRO	

REV	DESCRIPTION	DATE	APPROVED

REVIEWS

UNLESS OTHERWISE SPECIFIED

TOLERANCES DIMENSIONS ISO 2768-1 mK-E ASME Y14.5M-1994

MM	INCHES	ANGLES
+.1 -.1	+.004 -.004	+1°-1°

MATERIAL: AISI 4140 T

SURFACE TREATMENT: GALVANIZED

HARDNESS: N/A

FIM005-P2-286

SHEET 1 OF 1

TAKATA

APPROVALS		DATE
DESIGNER	HMG	10/09/2017
REVIEW	JATA	10/09/2017

ALL TECHNICAL DATA DISCLOSED HERE IN IS THE PROPERTY OF TAKATA SEAT BELTS INC. AND SHALL NOT BE USED BY ANY OTHER MANUFACTURER, PROCUREMENT OR DISCLOSURE WITHOUT WRITTEN PERMISSION OF THE OWNMER.

TAKATA MONTERREY TECHNICAL CENTER

MODEL NAME: FIM005-P2 SERIES No: M2017-065

MACHINE NAME: FEELING REAR CON CANCELLER

PART NUMBER: FIM005-P2-286

SIZE **A** PART NAME M2007-0XX REV. **A**

SCALE: 1:1 **DRAWING IN** INCHES

TKH-MTC-MF-FM-0016-003