NAME	DATE	TIME (HRS)

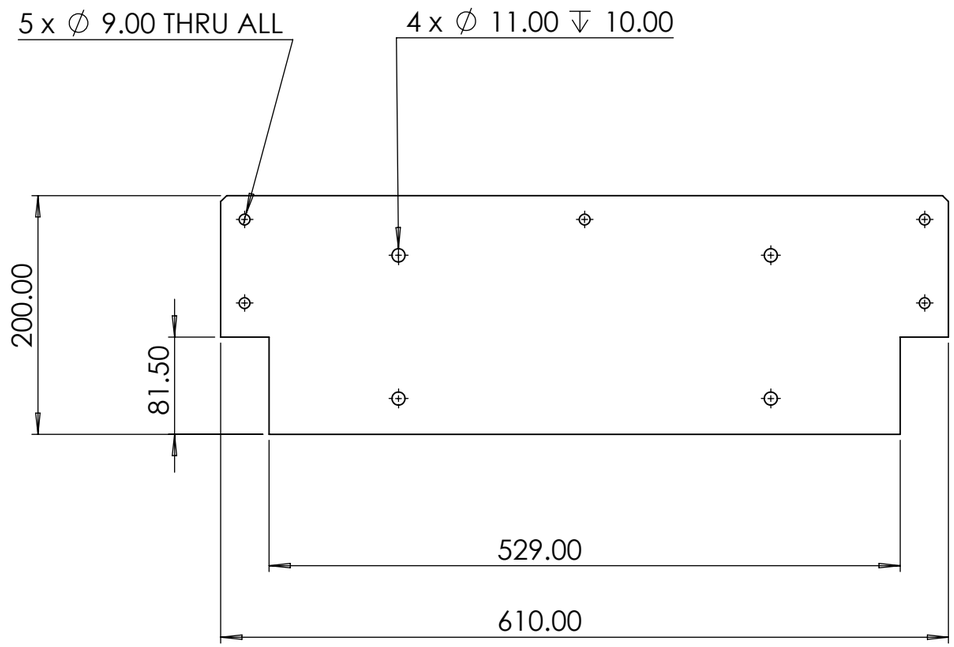

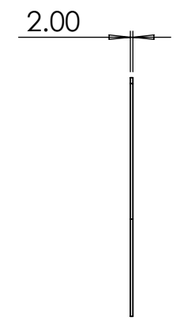

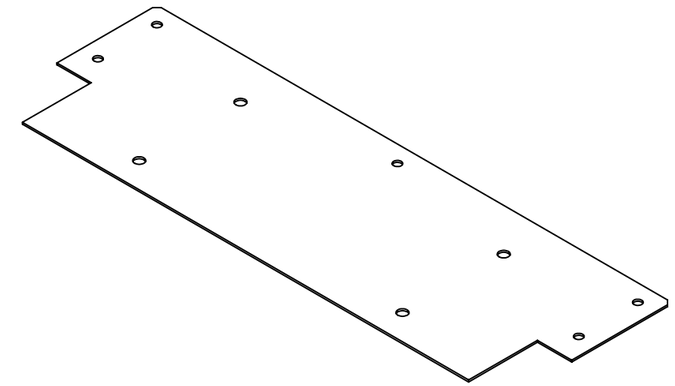

CM002-TRN-100-018

PAG. 1 de 1

E MEDIDA ESPECIAL

ALL TECHNICAL DATA DISCLOSED HERE IN IS THE PROPERTY OF JOYSON SAFETY SYSTEMS AND SHALL NOT BE USED BY ANY OTHER MANUFACTURER, PROCUREMENT OR DISCLOSURE WITHOUT WRITTEN PERMISSION OF THE OWNMER.

JOYSON
EQUIPO AUTOMOTRIZ AMERICANA S.A. DE C.V.
BOLSAS DE AIRE
NOMBRE: RM
FIRMA:

AUTHORIZE | TALLER | QUALITY

NOTES:
Pieza libre de filos y rebabas.

TOTAL OF PIECES	1 Pza.
ANG. PROF	

REV	DESCRIPTION	DATE	APPROVED

REVIEWS

UNLESS OTHERWISE SPECIFIED

TOLERANCES DIMENSIONS	ISO 2768-1 mK-E ASME Y14.5M-1994	
MM	INCHES	ANGLES
+.1 -.1	+.004 -.004	+1° -1°

MATERIAL:	SS304
SURFACE TREATMENT	Pulido
HARDNESS	N.A

JOYSON SAFETY SYSTEMS

APPROVALS		DATE
DESIGNER	JEC	6/2/2022
REVIEW	JEC	6/2/2022

JOYSON TECHNICAL CENTER

MODEL NAME	CM002-TRN	SERIES No	M2022-17
MACHINE NAME	Crimping Machine		
PART NUMBER	CM002-TRN-100-018		
SIZE **B**	PART NAME		REV.
ESCALE: 1:5		DRAWING IN MILLIMETERS	

JSSAM-JTC-MF-FM-0002-001