NAME	DATE	TIME (HRS)

TAG	X LOC	Y LOC	SIZE
A1	-312	372.10	∅8.50 THRU
A2	-312	-372.10	∅8.50 THRU
A3	312	372.10	∅8.50 THRU
A4	312	-372.10	∅8.50 THRU
B1	-113.60	-101.50	∅ 5.00 THRU ALL M6X1.0 THRU ALL ∅ 6.05 X 90°, NEAR SIDE
B2	-113.60	-171.50	∅ 5.00 THRU ALL M6X1.0 THRU ALL ∅ 6.05 X 90°, NEAR SIDE
B3	-49.40	-101.50	∅ 5.00 THRU ALL M6X1.0 THRU ALL ∅ 6.05 X 90°, NEAR SIDE
B4	-49.40	-171.50	∅ 5.00 THRU ALL M6X1.0 THRU ALL ∅ 6.05 X 90°, NEAR SIDE

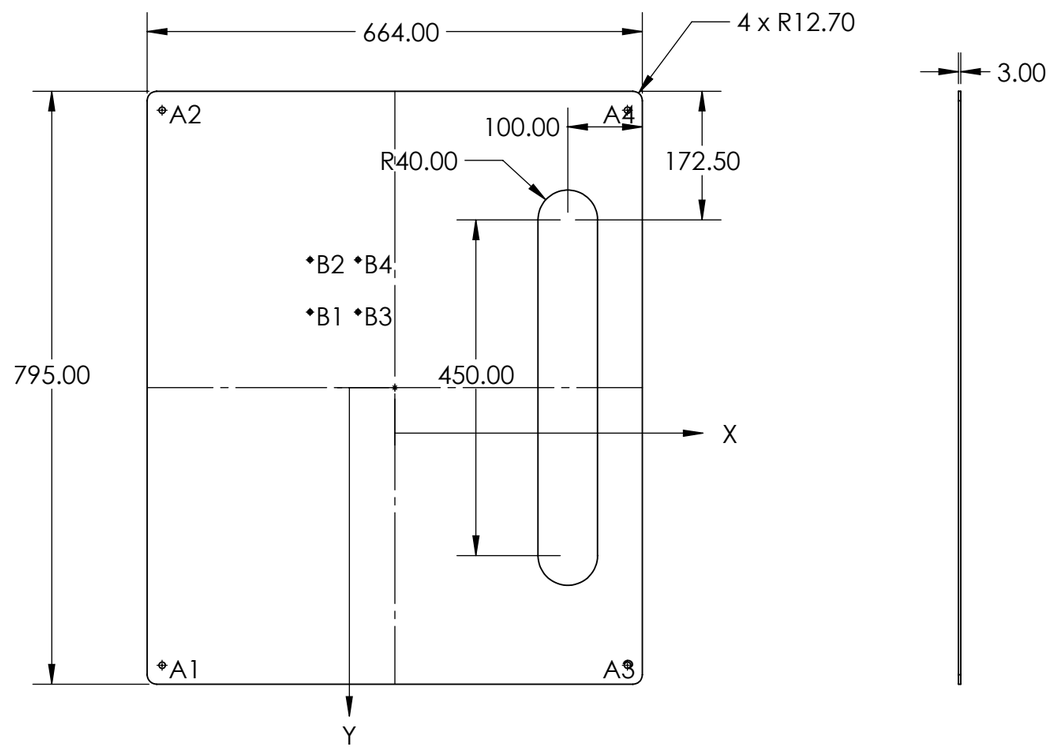

PFM010-MVA-100-005

PAG. 1 de 1

MEDIDA ESPECIAL

ALL TECHNICAL DATA DISCLOSED HERE IN IS THE PROPERTY OF JOYSON SAFETY SYSTEMS AND SHALL NOT BE USED BY ANY OTHER MANUFACTURER, PROCUREMENT OR DISCLOSURE WITHOUT WRITTEN PERMISSION OF THE OWNMER.

NOTES:

Pieza libre de filos y rebabas.

TOTAL OF PIECES	1 Pza.
ANG. PROF	

REV	DESCRIPTION	DATE	APPROVED

REVIEWS

UNLESS OTHERWISE SPECIFIED

TOLERANCES DIMENSIONS	ISO 2768-1 mK-E ASME Y14.5M-1994	
MM	INCHES	ANGLES
+.1 -.1	+.004 -.004	+1° -1°

MATERIAL:	SS 316
SURFACE TREATMENT	"PULIDO"
HARDNESS	N/A

JOYSON SAFETY SYSTEMS

APPROVALS		DATE
DESIGNER	JLOV	3/22/2022
REVIEW	RVM	3/22/2022

JOYSON TECHNICAL CENTER

MODEL NAME	P F M 010 - M V A	SERIES No	M2022-009
MACHINE NAME	FOLDING MACHINE CANOO DAB		
PART NUMBER	PFM010-MVA-100-005		
SIZE **B**	PART NAME PFM010-MVA-100-005		REV. **A**
ESCALE: 1:8		DRAWING IN MILLIMETERS	

AUTHORIZE	TALLER	QUALITY

JSSAM-JTC-MF-FM-0002-001