NAME	DATE	TIME (HRS)

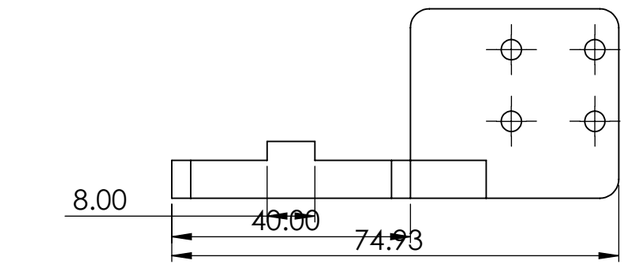

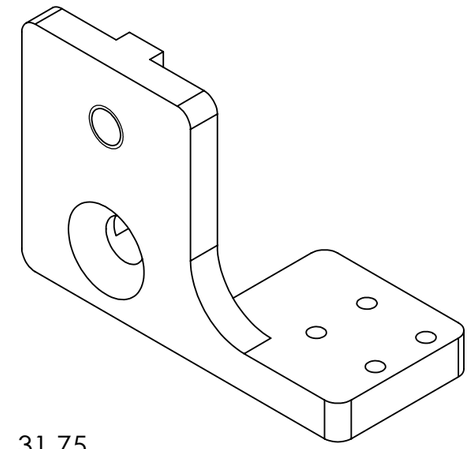

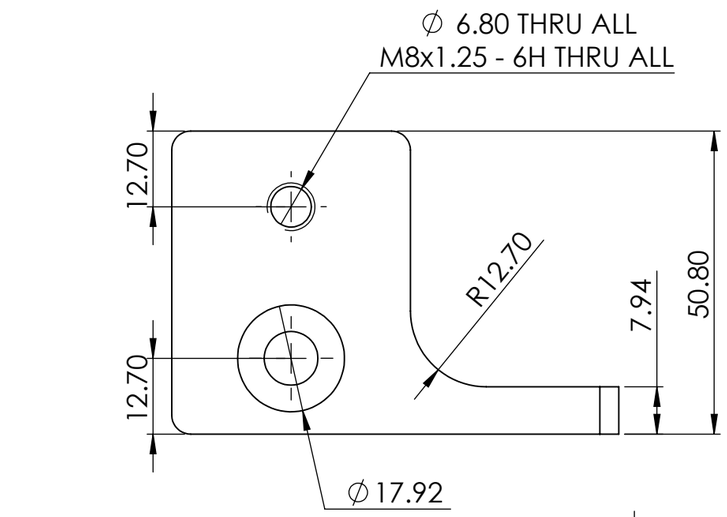

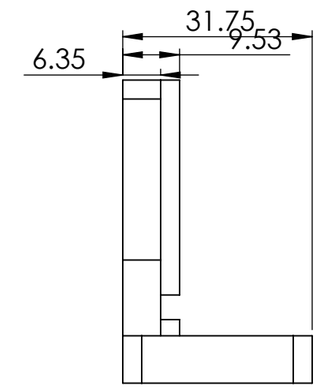

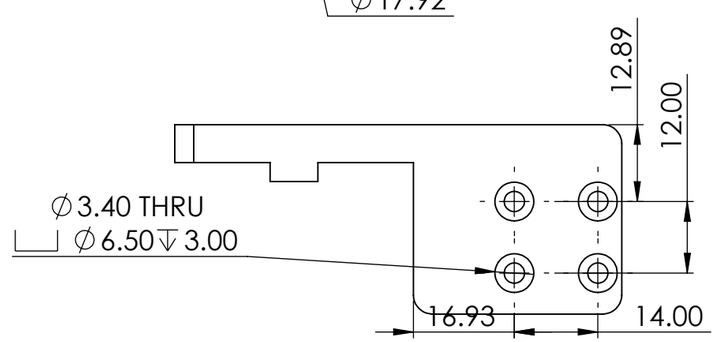

FM001-MVA-200-006

PAG. 1 de 1

E MEDIDA ESPECIAL

ALL TECHNICAL DATA DISCLOSED HERE IN IS THE PROPERTY OF JOYSON SAFETY SYSTEMS AND SHALL NOT BE USED BY ANY OTHER MANUFACTURER, PROCUREMENT OR DISCLOSURE WITHOUT WRITTEN PERMISSION OF THE OWNMER.

AUTHORIZE	TALLER	QUALITY

NOTES:
Pieza libre de filos y rebabas.

REV	DESCRIPTION	DATE	APPROVED

REVIEWS

TOTAL OF PIECES: 2 Pza.
ANG. PROF

UNLESS OTHERWISE SPECIFIED
TOLERANCES DIMENSIONS: ISO 2768-1 mK-E ASME Y14.5M-1994

MM	INCHES	ANGLES
+.1 -.1	+.004 -.004	+1° -1°

MATERIAL: 6061 Aluminium
SURFACE TREATMENT: Anodizado
HARDNESS: N.A.

JOYSON SAFETY SYSTEMS

APPROVALS		DATE
DESIGNER	ABG	3/7/2022
REVIEW	RVM	3/7/2022

JOYSON TECHNICAL CENTER

MODEL NAME	FM001-MVA	SERIES No	M2022-006
MACHINE NAME	Folding Machine Canoo CAB (HSAB) 2nd Row		
PART NUMBER	FM001-MVA-200-006		
SIZE B	PART NAME FM001-MVA-200-006		REV. A
ESCALE: 1:1		DRAWING IN MILLIMETERS	

JSSAM-JTC-MF-FM-0002-001