NAME	DATE	TIME (HRS)

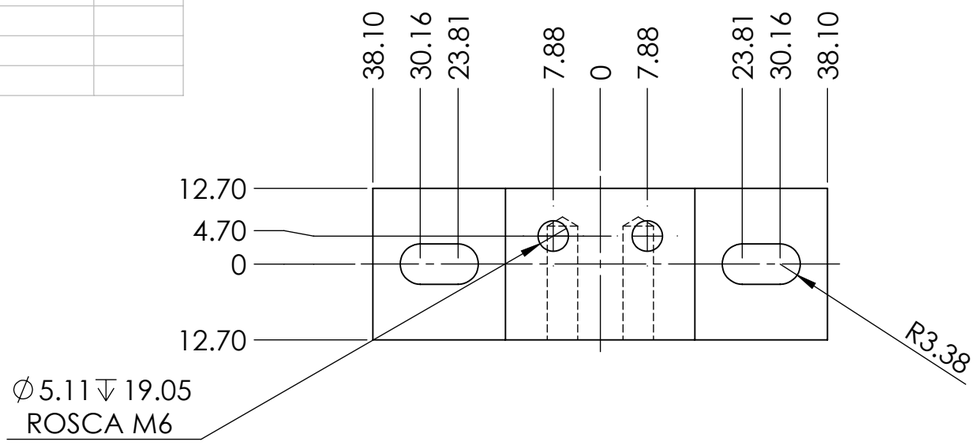

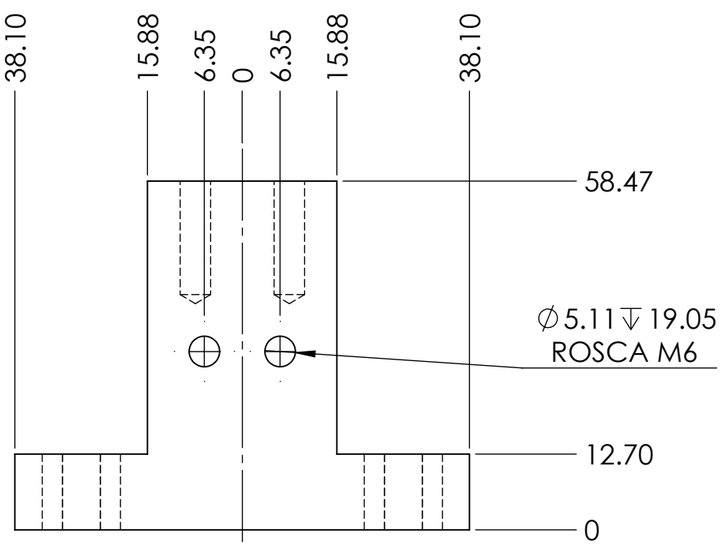

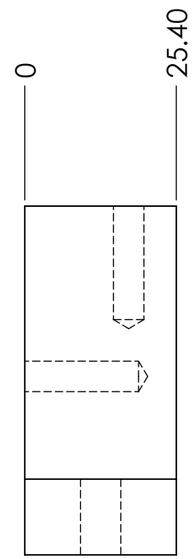

MTS001-TRN-001-003

PAG. 1 de 1

E MEDIDA ESPECIAL

ALL TECHNICAL DATA DISCLOSED HERE IN IS THE PROPERTY OF JOYSON SAFETY SYSTEMS AND SHALL NOT BE USED BY ANY OTHER MANUFACTURER, PROCUREMENT OR DISCLOSURE WITHOUT WRITTEN PERMISSION OF THE OWNMER.

NOTES:

Pieza libre de filos y rebabas.

TOTAL OF PIECES	28 Pza.
ANG. PROF	

REV	DESCRIPTION	DATE	APPROVED

REVIEWS

UNLESS OTHERWISE SPECIFIED

TOLERANCES DIMENSIONS	ISO 2768-1 mK-E ASME Y14.5M-1994	
MM	INCHES	ANGLES
+.1 -.1	+.004 -.004	+1° -1°

MATERIAL:

SURFACE TREATMENT

HARDNESS

JOYSON SAFETY SYSTEMS

APPROVALS		DATE
DESIGNER	JEC	12/07/2022
REVIEW	JEC	12/07/2022

JOYSON TECHNICAL CENTER

MODEL NAME	SERIES No
MACHINE NAME	
PART NUMBER	MTS001-TRN-001-003
SIZE **B**	PART NAME: TORRE
REV.	
ESCALE: 1:1	DRAWING IN MILLIMETERS

AUTHORIZE | TALLER | QUALITY

TKH-MTC-MF-FM-0016-005