NO.	REQUIREMENT (REQT.)	STANDARD:DATE	C	M	R	F
1	DRAWN ACC. TO:	JSS-GLOBAL-EN-ST-0010				
2	BANNED SUBSTANCES AND SUBSTANCES REQUIRING APPROVAL ACC. TO:	GADSL & GREEN GUIDELINE				
3	WELDING FOR ALL PLATES AND BLOCKS: FILLET WELDS (NOT SHOWN) PER CURRENT PRACTICE					

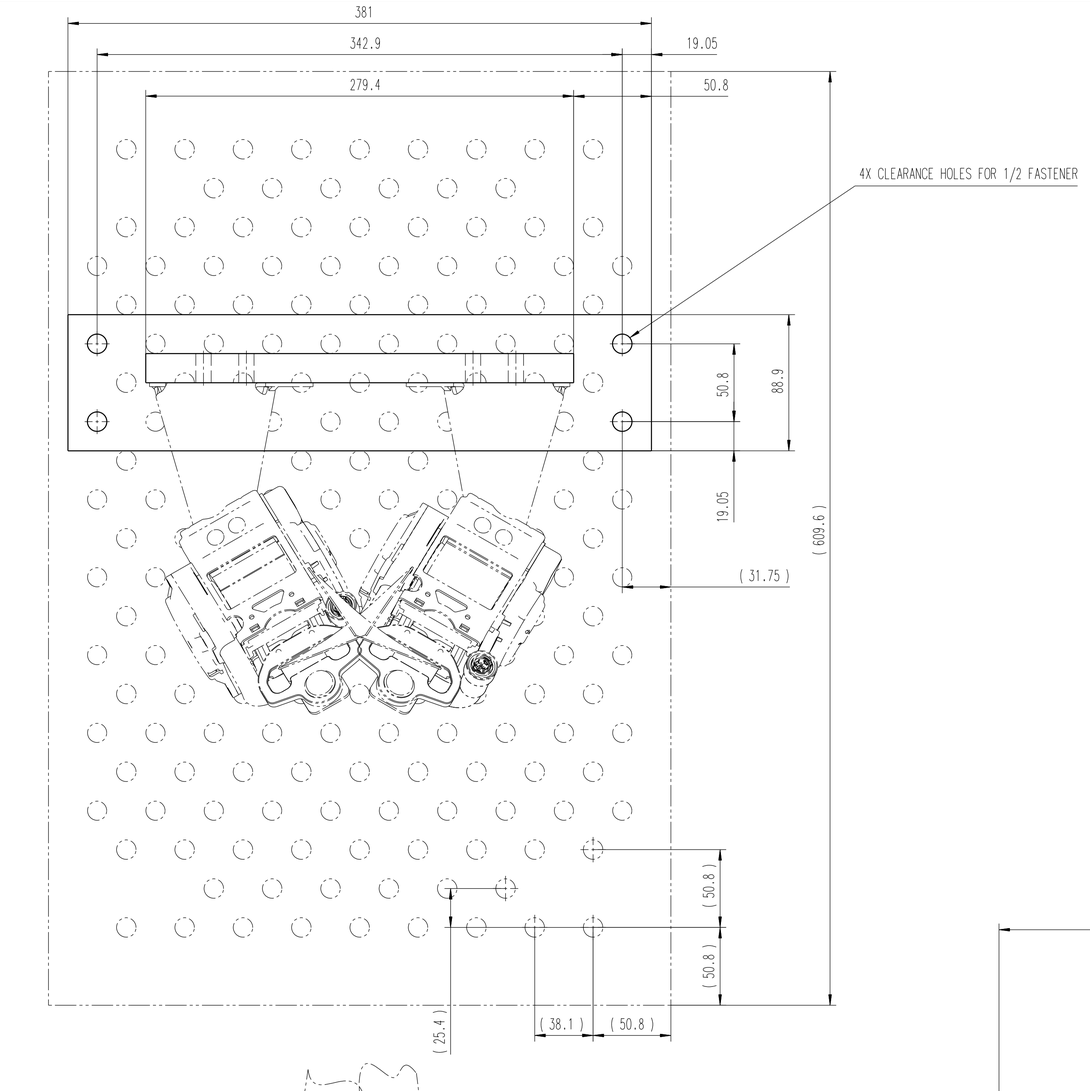

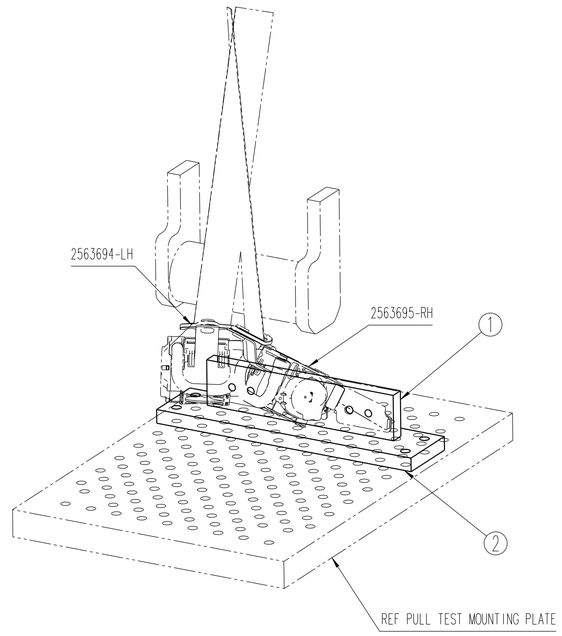

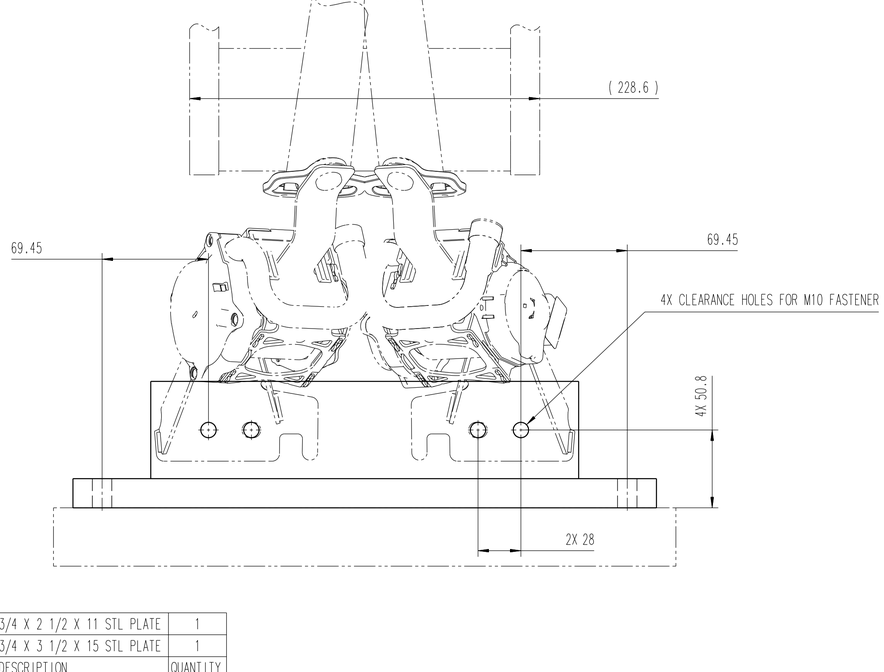

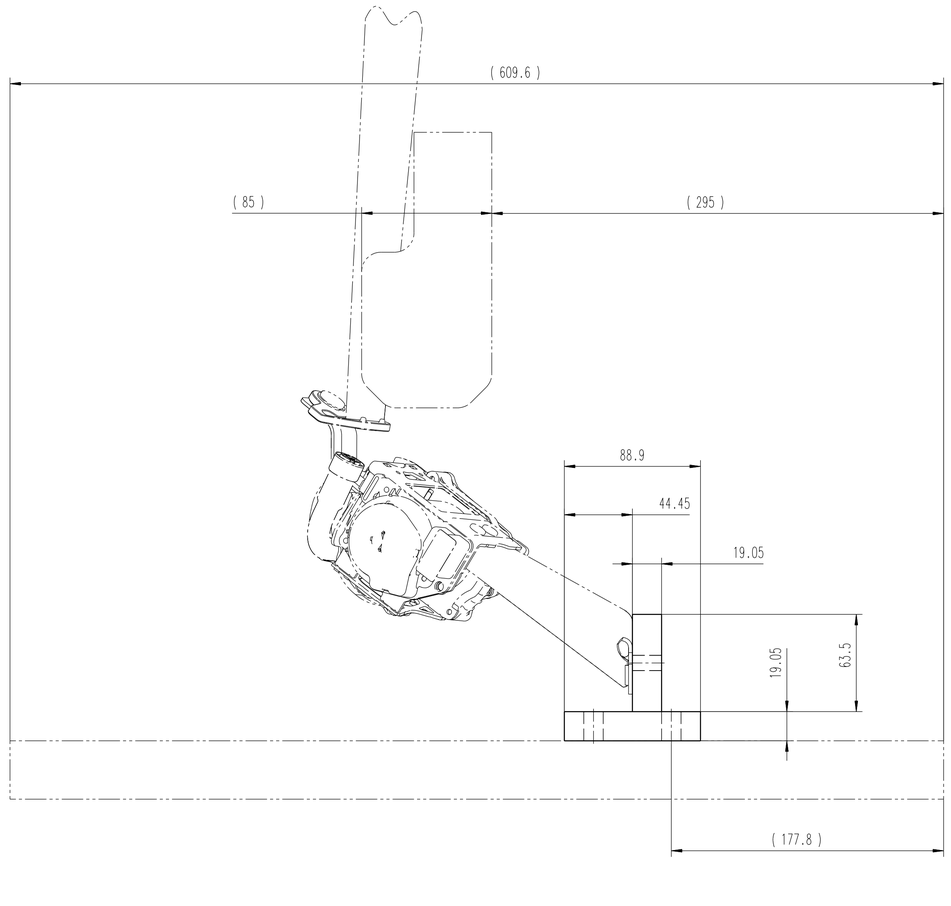

ITEM	DESCRIPTION	QUANTITY
2	3/4 X 2 1/2 X 11 STL PLATE	1
1	3/4 X 3 1/2 X 15 STL PLATE	1

PART NO.	PART NAME	REMARKS
F2000522-0	SEATBELT REAR ROW TENSILE FIXTURE	

PART INFORMATION

DWG. REV.	REVISION RECORD	DATE	DESIGN
0	RELEASED FOR DEVELOPMENT	2022-03-29	PFONK

GENERAL TOLERANCES ISO 22081

X.X X X X

TEDS ACCORDING TO CAD MODEL

JOYSON SAFETY SYSTEMS

ISO STANDARD METRIC UNITS

DOCUMENT CONTROLLED ELECTRONICALLY, CONFIRM STATUS IN PLM SYSTEM BEFORE USE; SEE PLM FOR APPROVALS & REVISION RECORD HISTORY

CONFIDENTIAL / COPYRIGHT RESERVED PER ISO16016

DRAWING NAME:	SEATBELT REAR ROW TENSILE FIXTURE	SCALE 1:2
DRAWING NO.:	F2000522-0	SHEET 1/1

App.: N/A Std.Chk.: N/A Des.Chk.: lbelmont

CATIA V5 LAST I.D. SYMBOL USED: Y7 I.D. SYMBOLS REMOVED: NONE

RELEASED: EO#2021863-E: 2022-05-25