NAME	DATE	TIME (HRS)

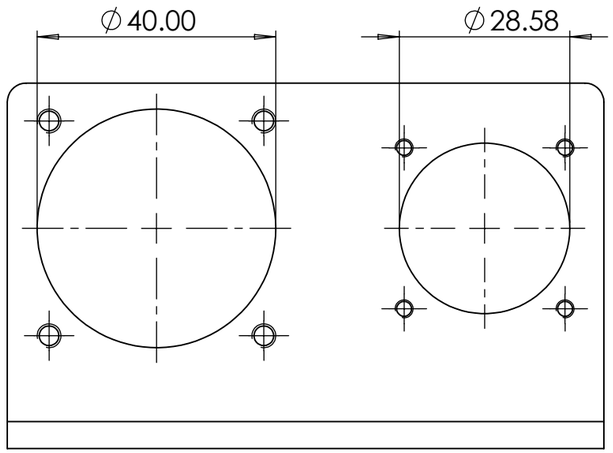

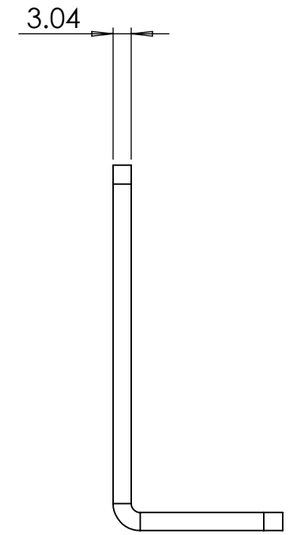

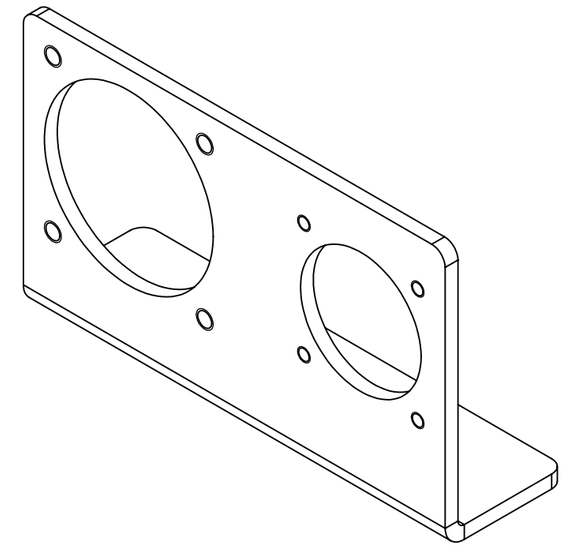

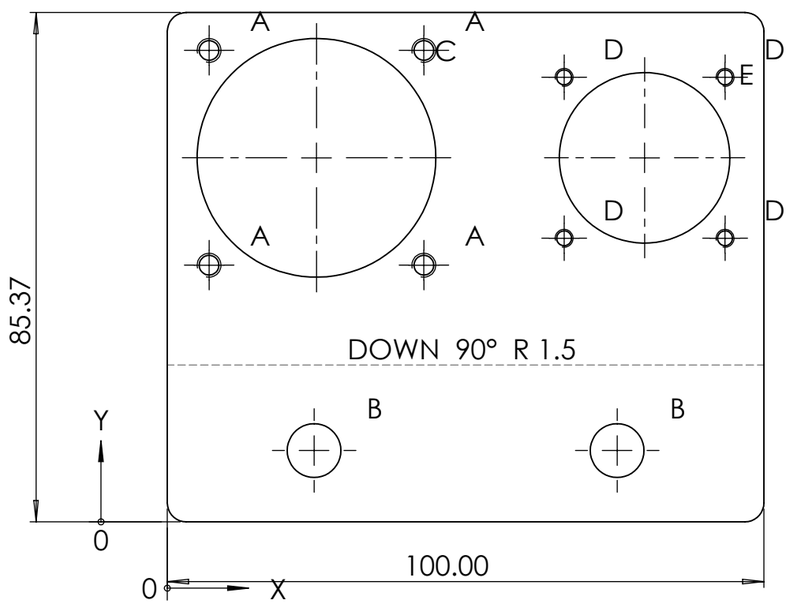

TAG	SIZE	QUANTITY
A	∅ 3.30 THRU ALL M4x0.7 - 6H THRU ALL	4
B	∅ 9.00 THRU ALL	2
C	∅40.00 THRU	1
D	∅ 2.50 THRU ALL M3x0.5 - 6H THRU ALL	4
E	∅28.58 THRU	1

CM001-TRN-102-006

PAG. 1 de 1

E MEDIDA ESPECIAL

ALL TECHNICAL DATA DISCLOSED HERE IN IS THE PROPERTY OF JOYSON SAFETY SYSTEMS AND SHALL NOT BE USED BY ANY OTHER MANUFACTURER, PROCUREMENT OR DISCLOSURE WITHOUT WRITTEN PERMISSION OF THE OWNMER.

AUTHORIZE	TALLER	QUALITY

NOTES:
Pieza libre de filos y rebabas.

TOTAL OF PIECES: 2 Pza.
ANG. PROF

REV	DESCRIPTION	DATE	APPROVED

REVIEWS

UNLESS OTHERWISE SPECIFIED
TOLERANCES DIMENSIONS: ISO 2768-1 mK-E ASME Y14.5M-1994

MM	INCHES	ANGLES
+.1 -.1	+.004 -.004	+1° -1°

MATERIAL: SS304
SURFACE TREATMENT: N.A.
HARDNESS: N.A.

JOYSON SAFETY SYSTEMS

APPROVALS		DATE
DESIGNER	JMM	5/2/2022
REVIEW	JEC	5/2/2022

JOYSON TECHNICAL CENTER

MODEL NAME	CMM001-TRN	SERIES No	M2022-0160
MACHINE NAME	Crimping Machine		
PART NUMBER	CM001-TRN-102-006		
SIZE B	PART NAME: Multi Connector Plate		REV. A
ESCALE: 1:1		DRAWING IN MILLIMETERS	

JSSAM-JTC-MF-FM-0002-001