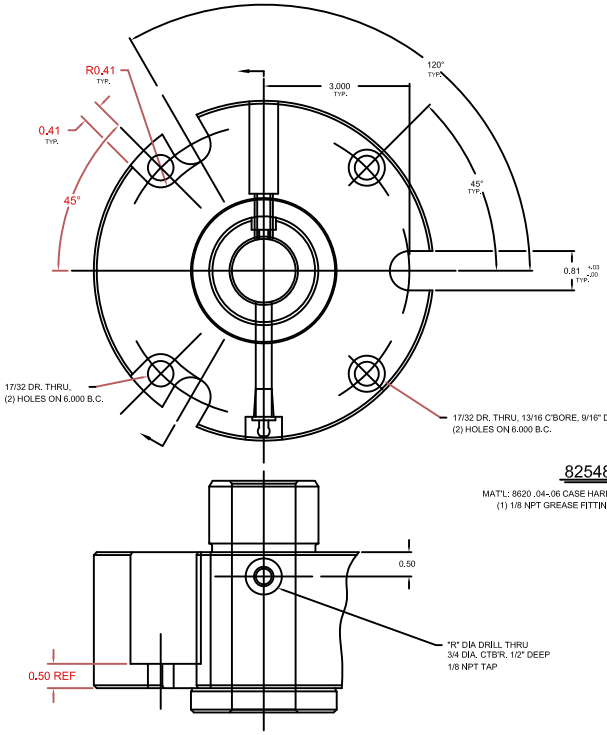

825480-2

MAT'L: 8620 .04-.06 CASE HARDEN 56-62 R"C"
(1) 1/8 NPT GREASE FITTING

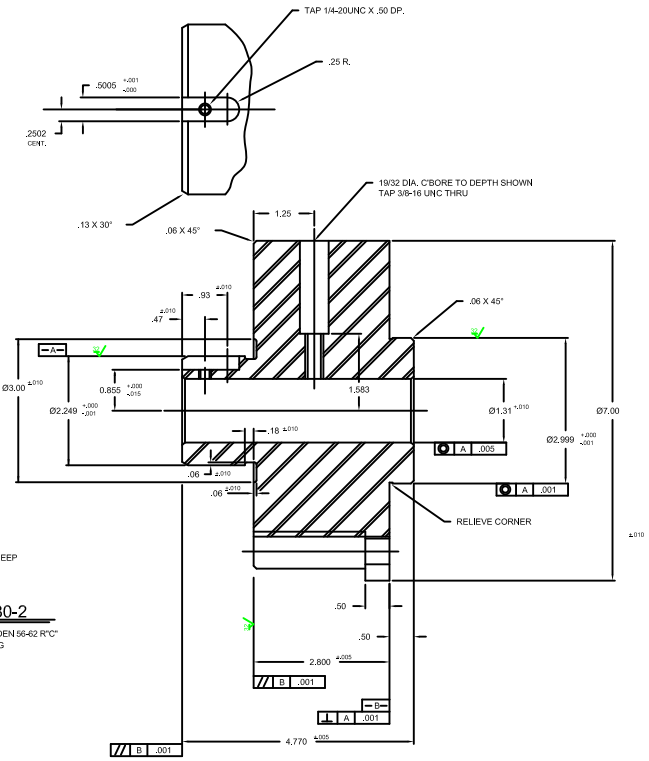

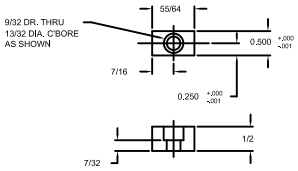

825480-8

MAT'L: 1/2 SQ. KEYSTOCK

WGF, LP PROPRIETARY INFORMATION

The information contained in this document is WGF, LP proprietary information and is disclosed in confidence. It is the property of WGF, LP and shall not be used, disclosed to others or reproduced without the express written consent of WGF, LP. If consent is given for reproduction in whole or in part, this notice and the notice set forth on each page of this document shall appear in any such reproduction in whole or in part. The information in this document may also be controlled by the U.S. export control laws. Unauthorized export or re-export is prohibited.

REV.	BY	DATE	DESCRIPTION
F	RC	7/23/99	ADDED DET'S. 32 THRU 35 SCOTLAND DET'S. 2 AND 8 WAS ON SHEET 1

REVISION

ACAD DWG.

H:\MISC\OTHER\825480.DWG

CONFIDENTIAL - THE INFORMATION CONTAINED IN THIS DOCUMENT IS THE PROPERTY OF WYMAN-GORDON FORGINGS, INC. IT IS NOT FOR PUBLIC DISCLOSURE. POSSESSION OF THE INFORMATION DOES NOT CONVEY ANY RIGHT TO LOAN, SELL, OR DISCLOSE THE INFORMATION. UNAUTHORIZED REPRODUCTION OR USE OF THE INFORMATION IS PROHIBITED. THIS DOCUMENT IS TO BE RETURNED TO WYMAN-GORDON FORGINGS, INC. UPON COMPLETION OF THE PURPOSE FOR WHICH IT IS LOANED OR UPON REQUEST.

	BY	DATE
DWG.	SGL	JUNE 24,96
CHK.		
APPR.		
APPR.		

WYMAN GORDON

WYMAN-GORDON FORGINGS, INC.
P.O. BOX 40456
HOUSTON, TX. 77240-0456

TITLE

COLLET CHUCK FIXTURE F/ MOTCH 2350-VNC SPINDLE

DRAWING TYPE

SHEET 7 OF 7 | SIZE D | SCALE 1.5 | WEIGHT

DRAWING NO. 825480

07-07-98 8:43 Am DSTRAUSS C:\WWORK\825480S7