General Dimension Tolerance			
0 ~ 4	±0.1	16 ~ 63	±0.3
4 ~ 16	±0.2	63 ~	±0.5

REVISIONS			
REV.	DESCRIPTION	DATE	APPROVED
1	CHANGE LARGE OF TUBING	30/4/2021	PERLA T.

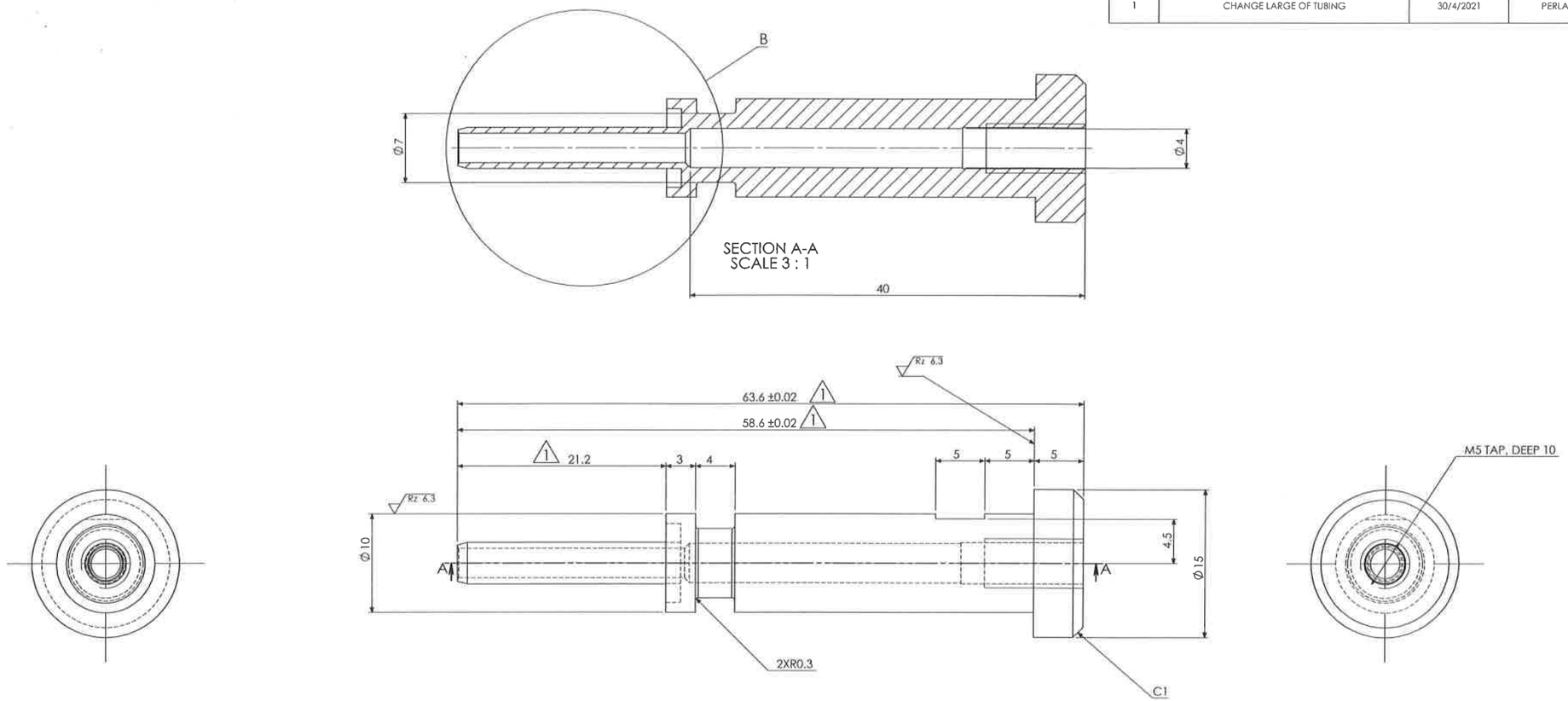

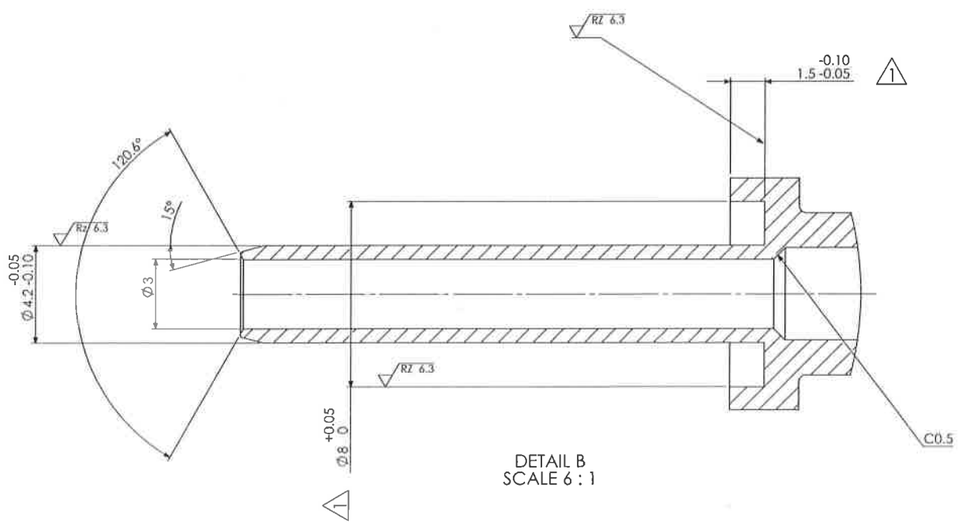

Rz 100 Rz 6.3

NOTE: UNLESS OTHERWISE SPECIFIED CHAMFER ALL CORNERS TO C0.5

SURFACE TREATMENT	HEAT TREATMENT	WEIGTH
MICr -20 ± 4µm	HRC61-63	
MATERIAL: SKD11 (ASTM A681 D2)	RESEMBLANCE PART No.	INP/O CODE / V/O CODE
PART NAME: VACUUM TUBE		
DENSO MEXICO	DWG NO: M-1142426-041	A2 / ASP CODE / SHEET 1 OF 1
APPROVED / CHECKED / CHECKED / DESIGNED / DRAWN	QTY.: 1	No.: 4 / SCALE 2:1

CONFIDENTIAL