NAME	DATE	TIME (HRS)

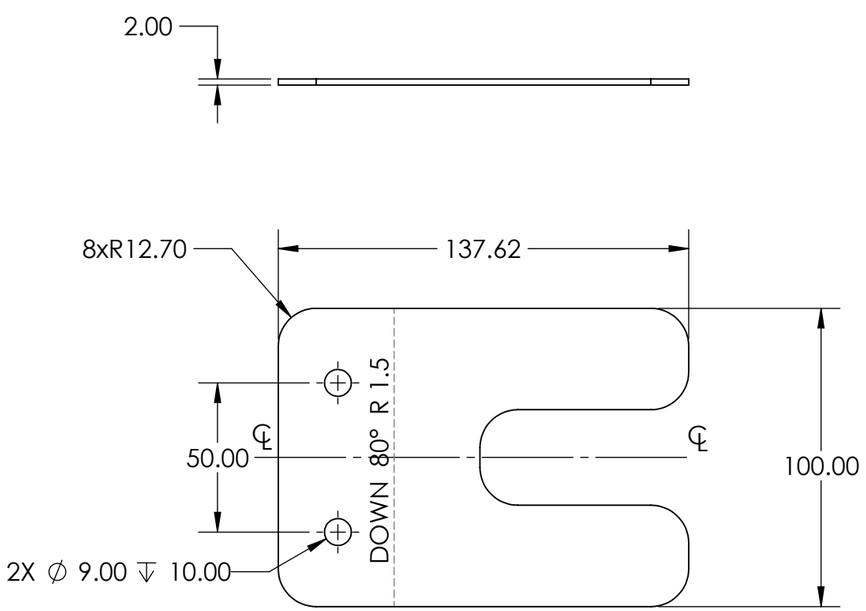

TOP VIEW
(PIEZA SIN DOBLES)

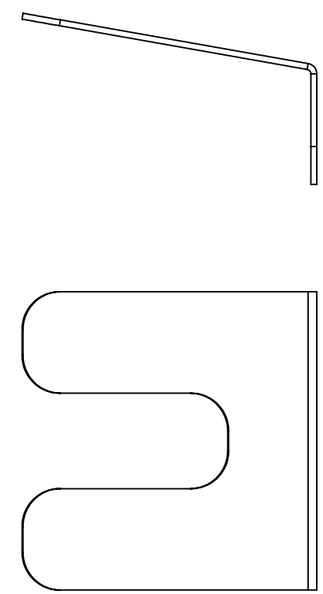

TOP VIEW
(PIEZA CON DOBLES)

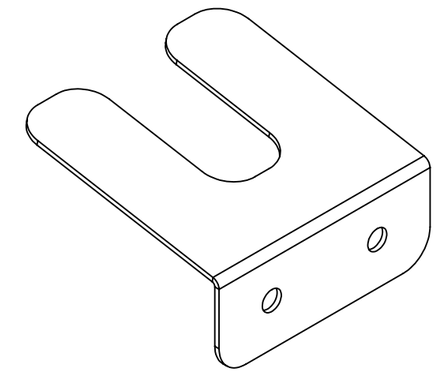

IWM002-TRN-101-005

PAG. 1 de 1

E MEDIDA ESPECIAL

ALL TECHNICAL DATA DISCLOSED HERE IN IS THE PROPERTY OF JOYSON SAFETY SYSTEMS AND SHALL NOT BE USED BY ANY OTHER MANUFACTURER, PROCUREMENT OR DISCLOSURE WITHOUT WRITTEN PERMISSION OF THE OWNMER.

AUTHORIZE	TALLER	QUALITY

NOTES:
Pieza libre de filos y rebabas.

REV	DESCRIPTION	DATE	APPROVED

REVIEWS

TOTAL OF PIECES: 1 Pza.

ANG. PROF

UNLESS OTHERWISE SPECIFIED

TOLERANCES DIMENSIONS: ISO 2768-1 mK-E ASME Y14.5M-1994

MM	INCHES	ANGLES
+.1 -.1	+.004 -.004	+1° -1°

MATERIAL: SS304

SURFACE TREATMENT: Pulido

HARDNESS: N.A.

JOYSON SAFETY SYSTEMS

APPROVALS		DATE
DESIGNER	JLOV	4/27/2022
REVIEW	RVM	4/27/2022

JOYSON TECHNICAL CENTER

MODEL NAME	IWM002-010	SERIES No	M2022-010
MACHINE NAME	INFLATOR WEIGHT #1		
PART NUMBER	IWM002-TRN-101-005		
SIZE B	PART NAME IWM002-TRN-101-005		REV. A
ESCALE: 1:2		DRAWING IN MILLIMETERS	

JSSAM-JTC-MF-FM-0002-001