ITEM	QTY	DESCRIPTION		PART No.
1	1	374 x 225 x 16 PLATE		
2	1	585 O.D. x 466 I.D. x 28 PLATE		
3	1	1145 x 885 x 16 PLATE		
4	1	1270 x 1015 x 16 PLATE		
5	1	3262 x 155 x 6 PLATE (APPROX DEVELOPED LTH)		
6	1	391 x 155 x 6 PLATE (APPROX DEVELOPED LTH)		
7	4	209 x 90 x 16 PLATE		

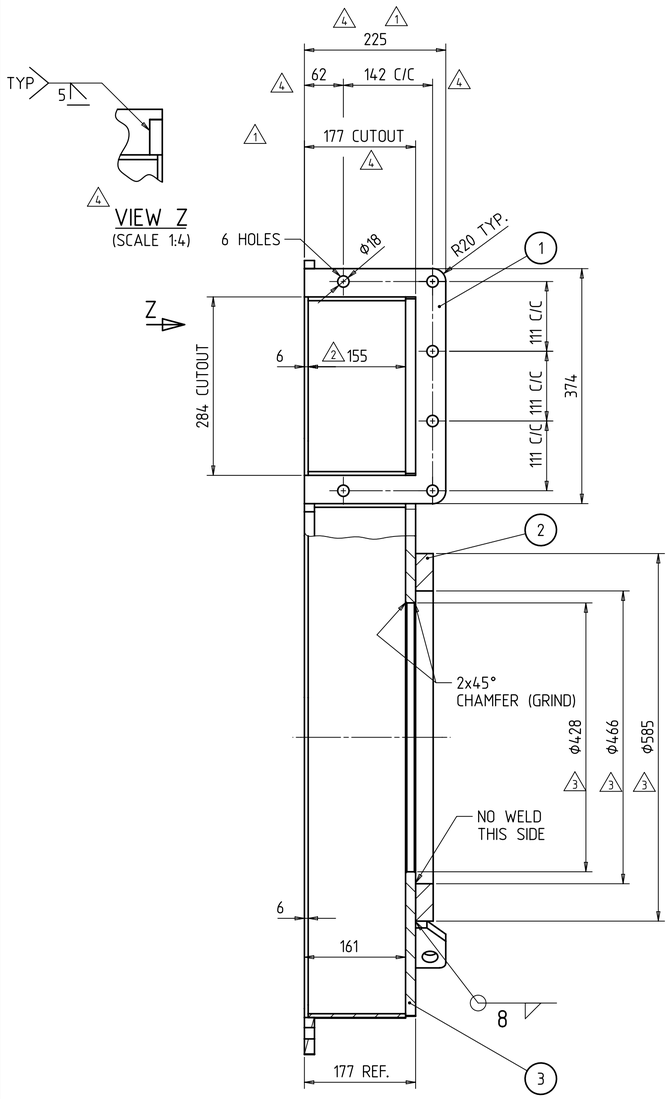

SECTION A-A

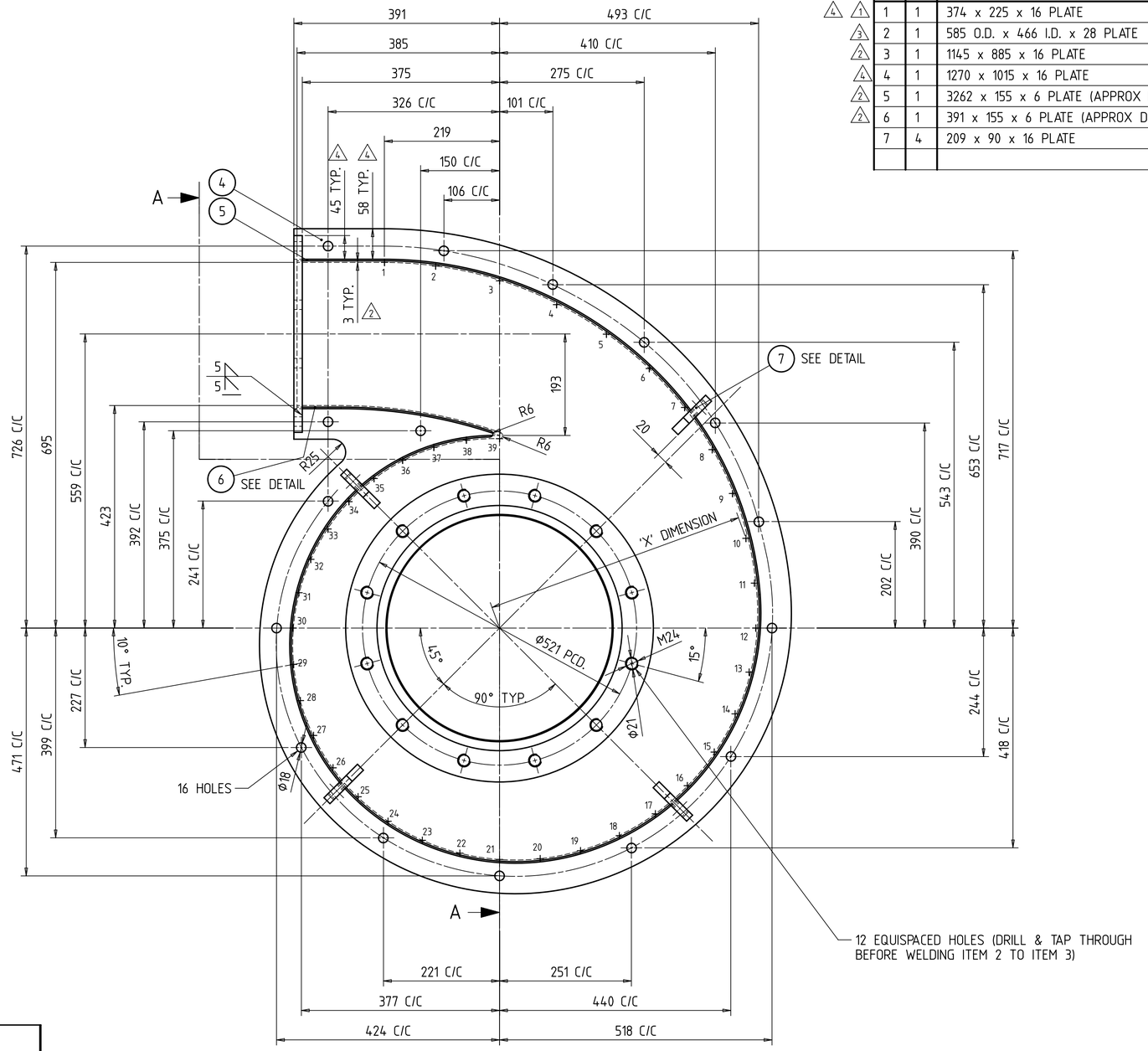

POINT LOCATION	
POINT No.	X DIM.
1	728,57
2	698,83
3	659,99
4	624,20
5	594,45
6	569,61
7	547,38
8	527,64
9	511,52
10	498,63
11	492,15
12	487,25
13	481,89
14	476,65
15	471,38
16	466,12
17	460,85
18	455,59
19	450,33
20	445,06
21	439,80
22	434,54
23	429,27
24	424,01
25	418,75
26	413,49
27	408,22
28	402,96
29	397,70
30	392,44
31	387,17
32	381,92
33	376,62
34	373,85
35	371,08
36	368,31
37	365,54
38	362,15
39	360,00

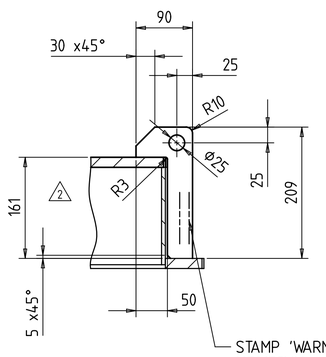

STAMP 'WARMAN' AND '65017CVX***' IN 10mm HIGH LETTERS ON ONE ITEM 7 ONLY, THIS POSITION

STAMP THE APPROPRIATE WARMAN MATERIAL CODE

DETAIL ITEM 7

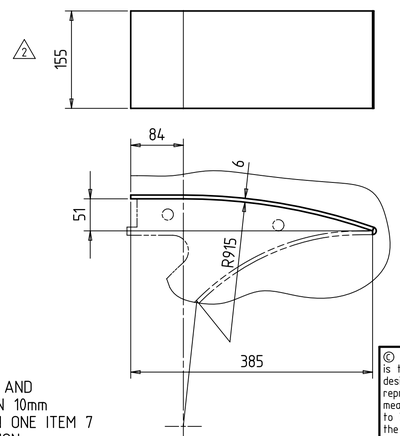

DETAIL ITEM 6

ITEM 3 NOT SHOWN FOR CLARITY

NOTE : 1. ALL WELDS TO BE 5 mm CONTINUOUS FILLET, UNLESS OTHERWISE SPECIFIED, TO SEAL ALL OVER AND CONFORM TO WELDING CODE - AS1554.1 CATEGORY GP.

2. REMOVE ALL BURRS AND SHARP EDGES.

3. POINT CO-ORDINATES REFER TO INSIDE PROFILE OF ITEM 5.

4. BLANK FROM ITEM 4 TO BE USED FOR ITEM 3.

MATERIAL : WARMAN CODE E02 UNLESS OTHERWISE SPECIFIED.

ESTIMATED MASS : 170 kg.

ENCUMBRANCE : 1012x1264x225

FOR LIMITS OF UNTOLERANCED DIMENSIONS REFER TO DRG. A4-15895.

© WARMAN INTERNATIONAL LTD. 1997. WARMAN INTERNATIONAL LTD. is the owner of the copyright subsisting in this drawing and these designs, specifications and instructions. They must not be used, reproduced or copied in whole or in part, in any form or by any means, nor may the information therein contained, which is confidential to WARMAN INTERNATIONAL LTD. be disclosed to any person, without the prior written consent of WARMAN INTERNATIONAL LTD.
The drawing has been delivered and received on the express conditions that it may be used only for the specific purpose for which it has been provided, may not be used in any way which may injure or cause loss directly or indirectly to WARMAN INTERNATIONAL LTD. or any related corporation and will be returned to WARMAN INTERNATIONAL LTD. immediately on completion of the task for which it has been provided, or on demand.

No.	DESCRIPTION	BY	DATE	CHK
5	CREATE 3D. AND MODIFY VALUE POINT No. 38 WAS 362,77. ADD ENCUMBRANCE NOTE.	JLI	JAN.05,2009	EHC
4	225; 62; 177; 58 WERE 219; 56; 171; 45. ITEM 1: 225 WAS 219. DIM 45 ADDED ITEM 4: WAS 1240 x 985. ITEM 7: ROTATED 45°. MASS WAS 158 kg. VIEW Z ADDED	ROH	MAY.5,1999	
3	ITEM 2 WAS 535 O.D. x 412 I.D. x 28 PLATE. Ø428 WAS Ø374 AND 521 PCD WAS 470 PCD. EST. MASS WAS 160 kg.	[illegible]	NOV.14,1997	J.A.
2	COVER PLATE REVISED TO LAP OVER ITEMS 5 & 6. DIM. 3 TYP. WAS 6. R3 WAS R5. DIM 155 WAS 165. NOTES 3 & 4 ADDED. ESTIMATED MASS WAS 165 kg.	PGC	OCT.14,1997	GAB

REVISIONS

APP.	
CHECK	
DRN.	GAB
DATE	MAR.4,1997
SCALE	1:5

WARMAN CYCLONE

COVER 65017CVX***

WARMAN INTERNATIONAL LTD.

OFFICE OF ORIGIN : SYDNEY Warman CAE-CAD-CAM

A1— 112 —0—133133

REV. 5