BILL OF MATERIAL			
IND.	QTY.	MATERIAL	SIZE
1	1	AISI-C-1018 C.R.S.	1½ x 2 x 10½
2	2	AISI-C-1018 C.R.S.	¼ x 2 x 3¼
3	1	AISI-C-1018 C.R.S.	¾ x 4 x 5
4	2	AISI-C-1018 C.R.S.	¼ x 3 x 3⅝

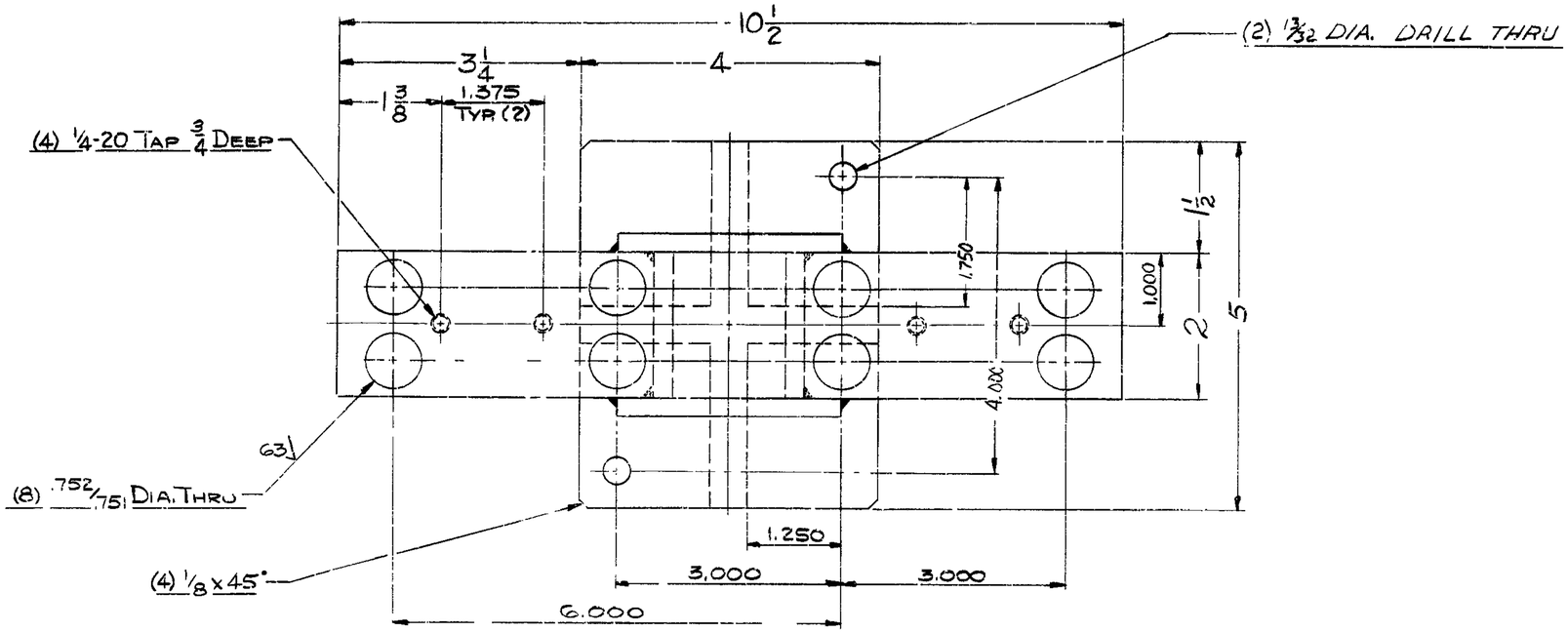

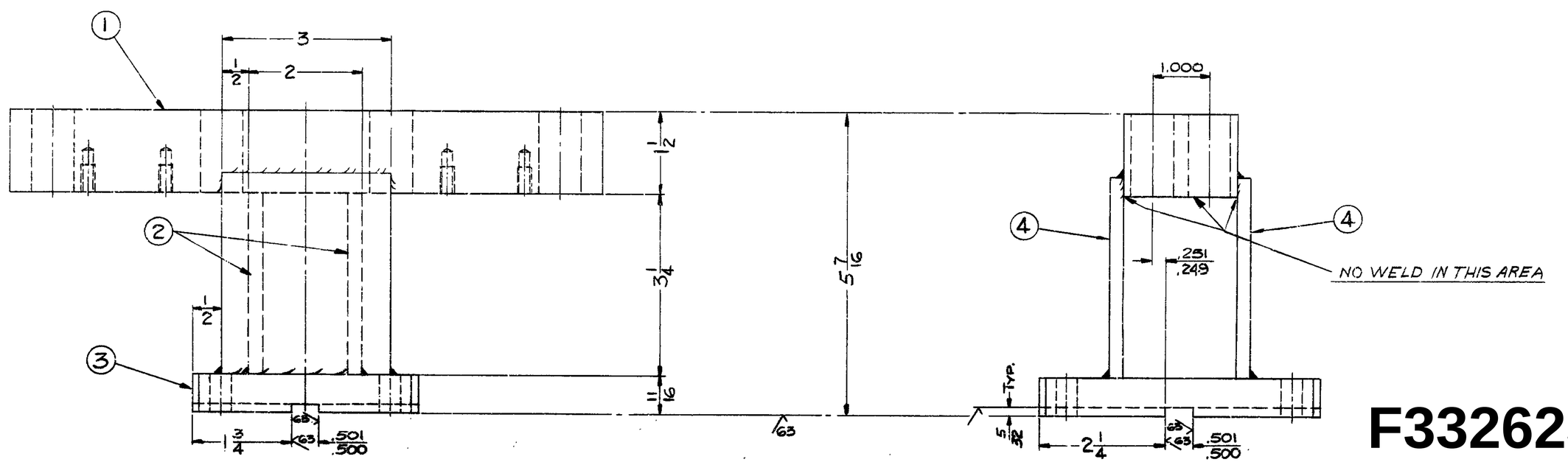

F332623

UNLESS SPECIFIED: 125 ✓
FINISHED SURFACE ROUGHNESS
UNLISTED DIMENSIONS – FRACTIONAL ± .015
DECIMAL ± .005
BREAK SHARP EDGES MAX. 1/64 CHAMFER AT ⊗

NAME ALIGNING PIN BRACKET
(Fine Guide)
DATE 7-3-90
SCALE 1:1 (1)
[redacted] NUMBER HF-4431-A
SHEET ___

USED ON ASSEMBLY NO. HF-0254