NAME	DATE	TIME (HRS)

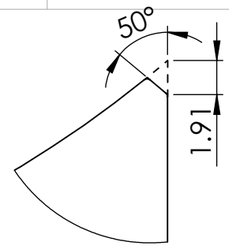

DETAIL A
SCALE 3 : 1

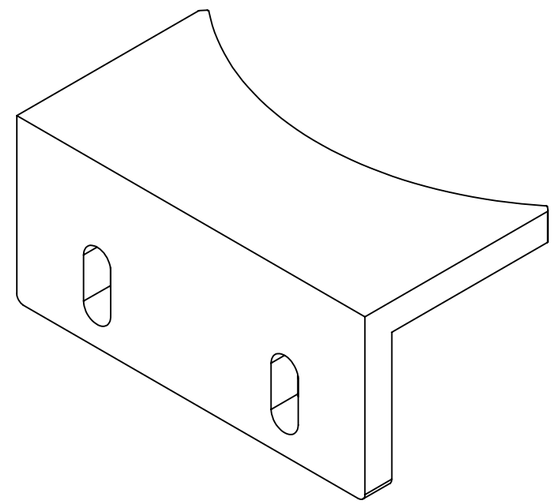

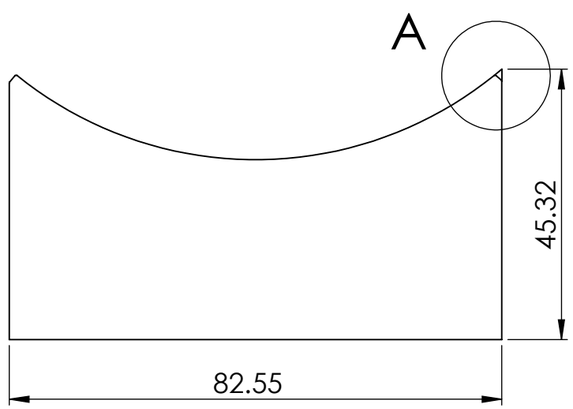

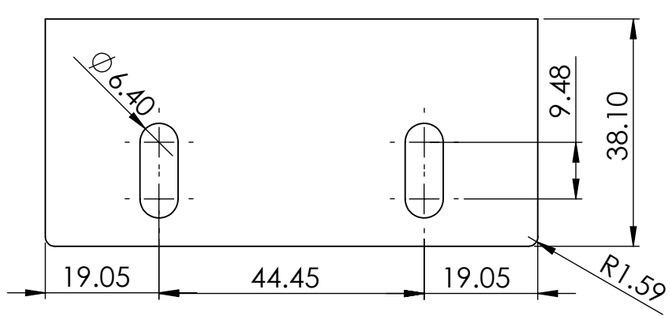

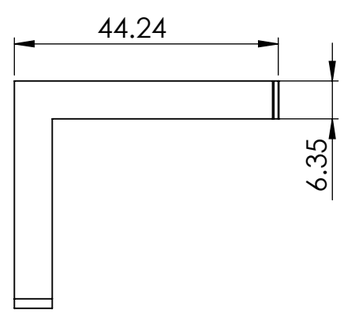

NCI002-TRN-101-002

PAG. 1 de 1

E MEDIDA ESPECIAL

ALL TECHNICAL DATA DISCLOSED HERE IN IS THE PROPERTY OF JOYSON SAFETY SYSTEMS AND SHALL NOT BE USED BY ANY OTHER MANUFACTURER, PROCUREMENT OR DISCLOSURE WITHOUT WRITTEN PERMISSION OF THE OWNMER.

AUTHORIZE	TALLER	QUALITY

NOTES:
Pieza libre de filos y rebabas.

TOTAL OF PIECES: 1 Pza.
ANG. PROF

REV	DESCRIPTION	DATE	APPROVED

REVIEWS

UNLESS OTHERWISE SPECIFIED

TOLERANCES DIMENSIONS	ISO 2768-1 mK-E ASME Y14.5M-1994	
MM	INCHES	ANGLES
+.1 -.1	+.004 -.004	+1° -1°

MATERIAL: Acetal Negro
SURFACE TREATMENT: N.A.
HARDNESS: N.A.

JOYSON SAFETY SYSTEMS

APPROVALS		DATE
DESIGNER	LGG	22-Jul-19
REVIEW	JEC	22-Jul-19

JOYSON TECHNICAL CENTER

MODEL NAME	NCI002-TRN	SERIES No	M2019-099
MACHINE NAME	Daimler BR167DAB		
PART NUMBER	NCI002-TRN-101-002		
SIZE **B**	PART NAME NCI002-TRN-101-002		REV. **A**
ESCALE: 1:1		DRAWING IN MILLIMETERS	

TKH-MTC-MF-FM-0016-005