NAME	DATE	TIME (HRS)

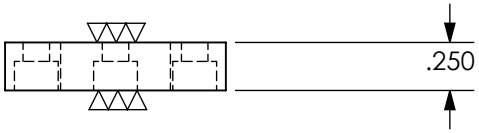

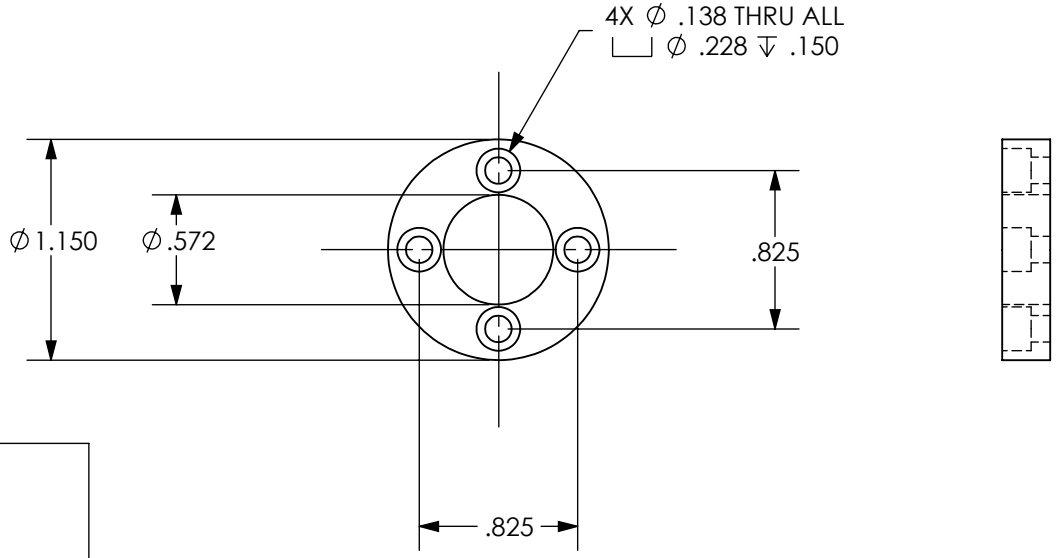

QUALITY

AUTHORIZE

TALLER

NOTES:
Pieza libre de filos y rebabas.

TOTAL OF PIECES	2 Pzas.
ANG. PRO	

REV	DESCRIPTION	DATE	APPROVED

REVIEWS

UNLESS OTHERWISE SPECIFIED

TOLERANCES ISO 2768-1 mK-E
DIMENSIONS ASME Y14.5M-1994

MM	INCHES	ANGLES
+.1 -.1	+.004 -.004	+1°-1°

MATERIAL: COLD ROLLED 1018

SURFACE TREATMENT: GALVANIZED

HARDNESS: N.A.

GT001-AC-008 PAG. 1 de 1

E **MEDIDA ESPECIAL**

JOYSON SAFETY SYSTEMS

APPROVALS		DATE
DESIGNER	MCRH	24/JUN/2021
REVIEW	JATA	24/JUN/2021

ALL TECHNICAL DATA DISCLOSED HERE IN IS THE PROPERTY OF JOYSON SAFETY SYSTEMS AND SHALL NOT BE USED BY ANY OTHER MANUFACTURER, PROCUREMENT OR DISCLOSURE WITHOUT WRITTEN PERMISSION OF THE OWNMER.

JOYSON TECHNICAL CENTER

MODEL NAME: GT001-AC SERIES No: M2021-089

MACHINE NAME: G-TESTER NUM.1

PART NUMBER: GT001-AC-008

SIZE **A** PART NAME PART 008 REV. **A**

ESCALE 1:3.5 **DRAWING IN** INCHES

JSSAM-JTC-MF-FM-0002-001