General Dimension Tolerance			
0 ~ 4	±0.1	16 ~ 63	±0.3
4 ~ 16	±0.2	63 ~	±0.5

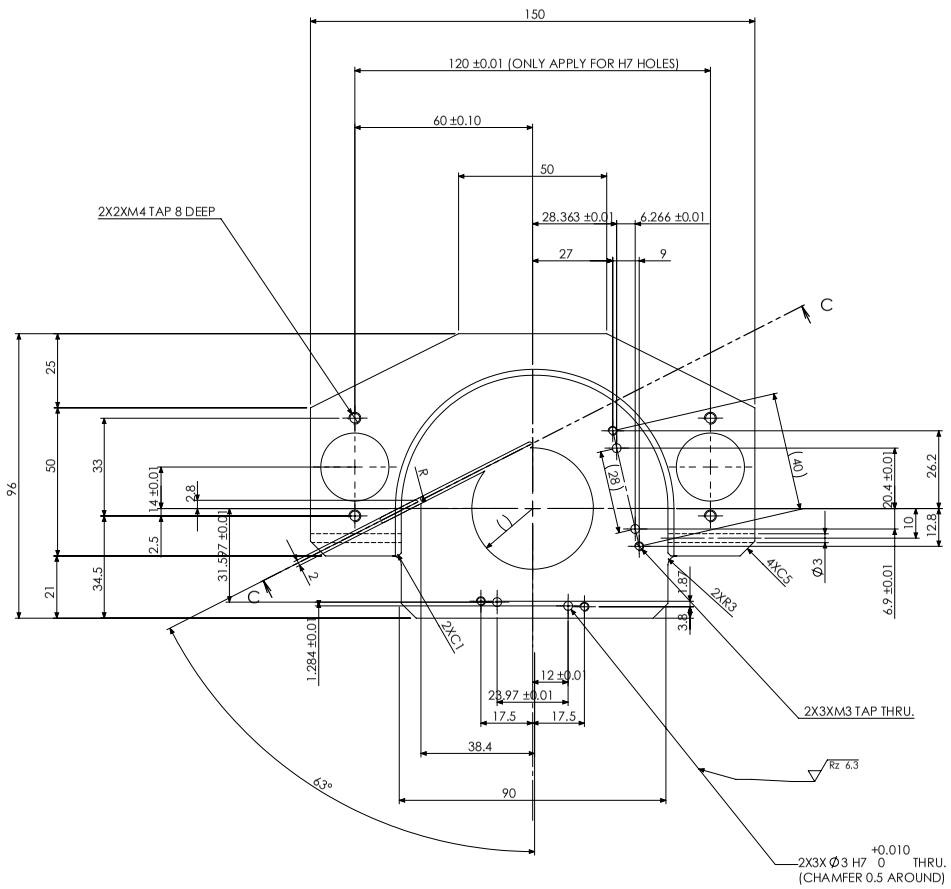

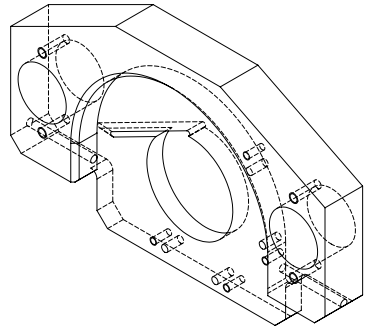

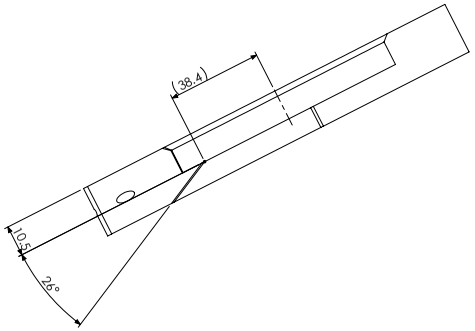

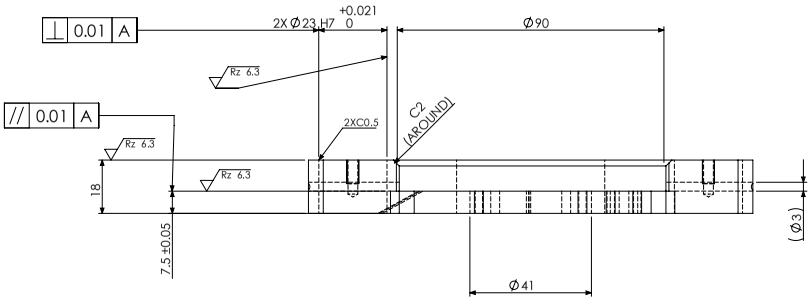

SURFACE TREATMENT	HEAT TREATMENT	WEIGHT
MICr-20 ± 4μm ALL PART		

MATERIAL :	RESEMBLANCE PART No.	INFO CODE	I/O CODE
HPM1 (AISIP 21)			

PART NAME: PLATE

DENSO MEXICO					DWG NO.	A2	A3P CODE	SHEET 1 OF 1
APPROVED	CHECKED	CHECKED	DISSIGNED	DRAWN	M-1059916-070			
					QTY.: 1	No.: 7		SCALE:1:1

CONFIDENTIAL