General Dimension Tolerance			
0 ~ 4	± 0.1	16 ~ 63	± 0.3
4 ~ 16	± 0.2	63 ~	± 0.5

REVISIONS			
REV.	DESCRIPTION	DATE	APPROVED
1	ADD HOLES FOR NEW CYLINDER	17/01/2022	J.D.

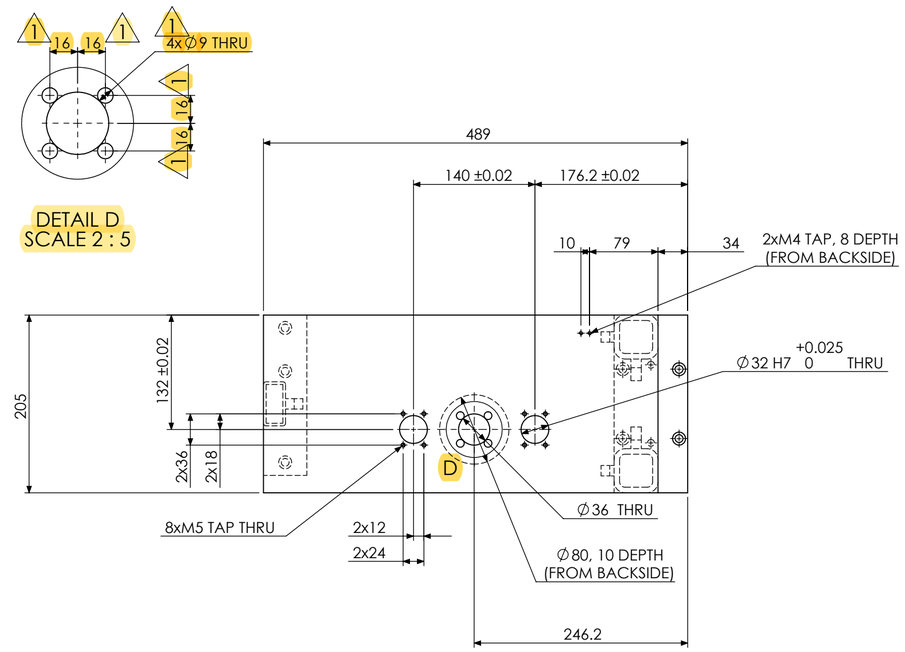

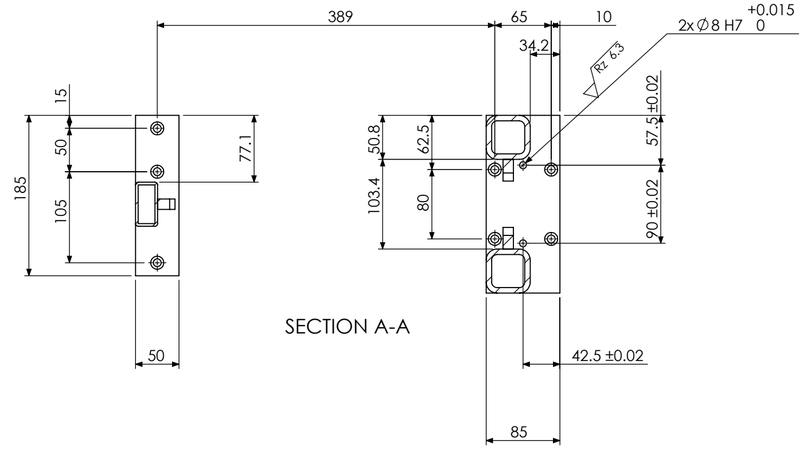

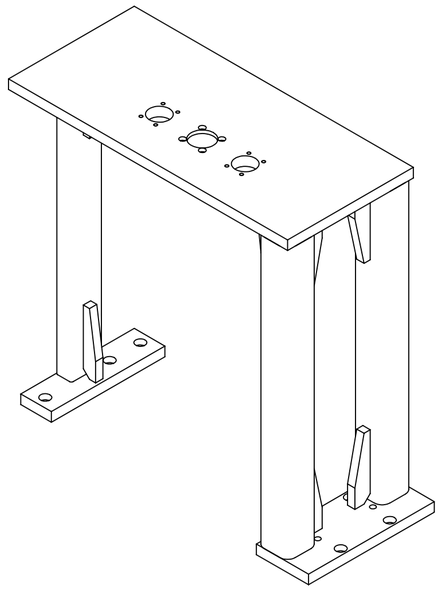

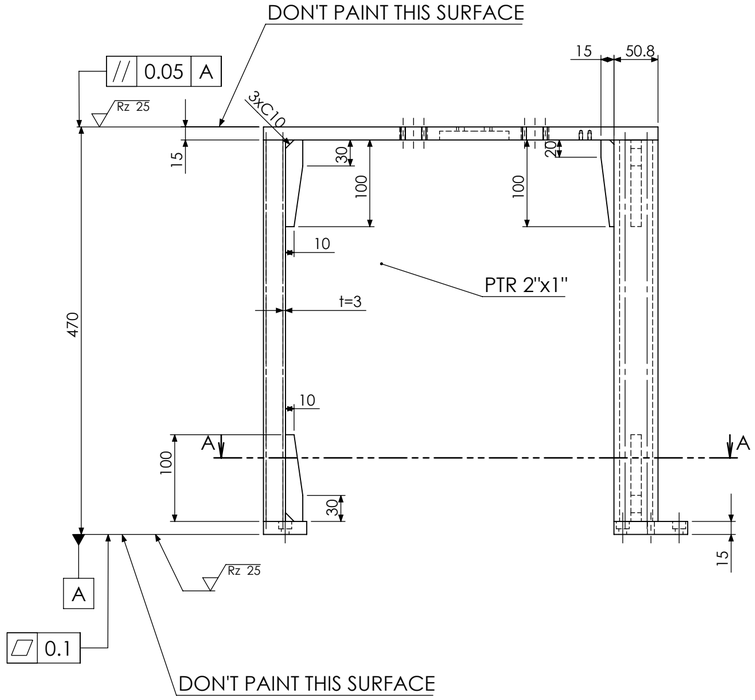

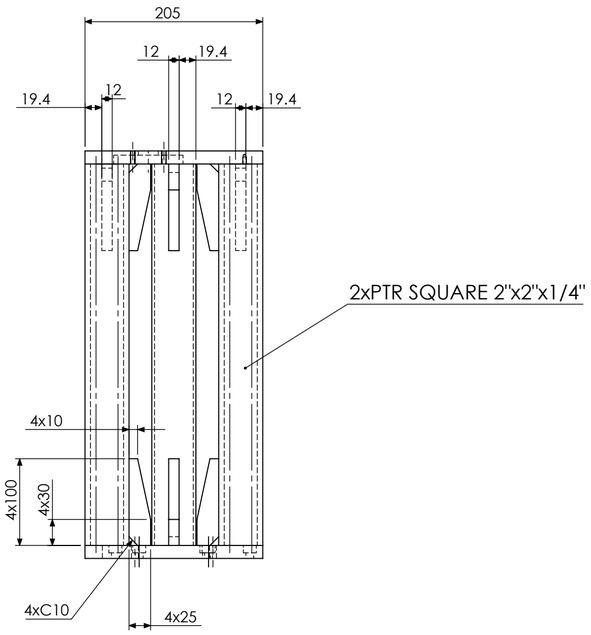

Rz 100 (Rz 25 Rz 6.3)

"NOTE: THIS PART IS WELDING STRUCTURE"

NOTE-" UNLESS OTHERWISE SPECIFIED SHALL BE CHAMFER C0.5"

SURFACE TREATMENT	HEAT TREATMENT	WEIGHT
PAINT: SW6141 (SHERWIN WILLIAMS)		
ALL PART		1

MATERIAL:	RESEMBLANCE PART No.	IMPO CODE	I/O CODE
SS400 (ASTM A36)			

PART NAME: STRUCTURE

DENSO MEXICO	DWG NO.	A2	ASP CODE	SHEET 1 OF 1
APPROVED / CHECKED / CHECKED / DESIGNED / DRAWN	M-0951868-061			
	QTY.: 1	No.: 6		SCALE:1:5

CONFIDENTIAL