| General Dimension Tolerance | | | |
|---|---|---|---|
| 0 ~ 4 | ± 0.1 | 16 ~ 63 | ± 0.3 |
| 4 ~ 16 | ± 0.2 | 63 ~ | ± 0.5 |

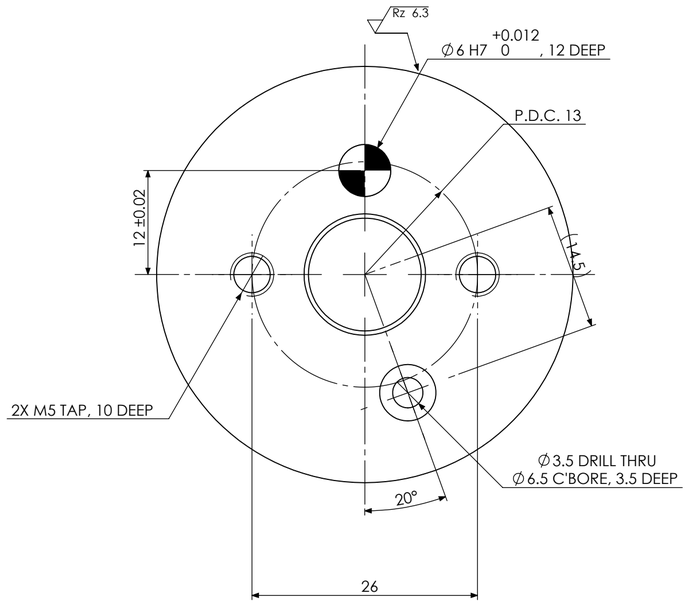


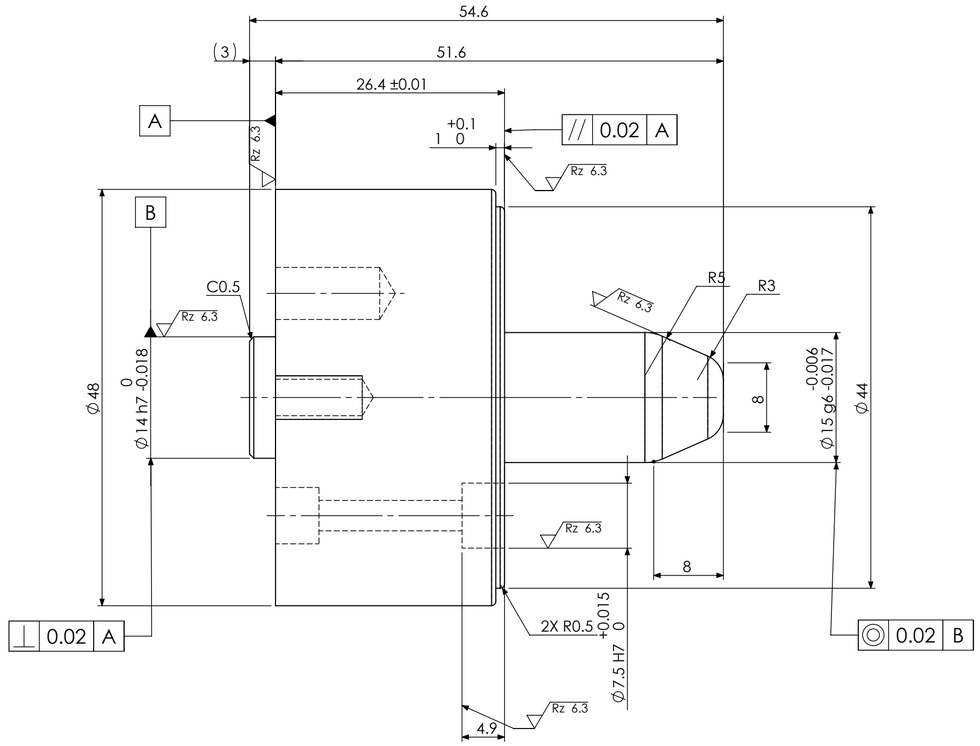


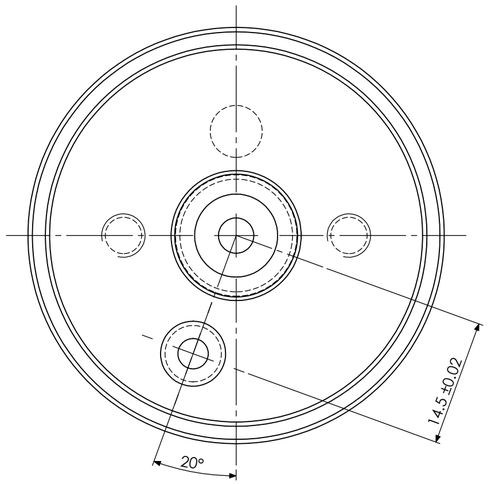


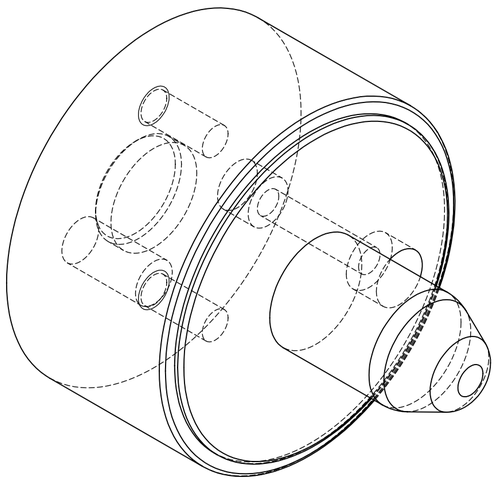

Rz 100 ( Rz 6.3 )

NOTE: ALL EDGES MUST BE C0.5 UNLESS OTHERWISE SPECIFIED

| SURFACE TREATMENT | HEAT TREATMENT | WEIGHT |
|---|---|---|
| MICr-20 ± 4µm | QT- HRC 60-62 | |
| ALL PART | | |

| MATERIAL: | RESEMBLANCE PART No. | IMPO CODE | I/O CODE |
|---|---|---|---|
| SKD11 (ASTM A681 D2) | | | |

PART NAME: JIG

| DENSO MEXICO | | | | | DWG NO. | A2 | ASP CODE | SHEET 1 OF 1 |
|---|---|---|---|---|---|---|---|---|
| APPROVED | CHECKED | CHECKED | DESIGNED | DRAWN | M-4018623-060 | | | |
| | | | Shoho So | I.R. ABTS | QTY.: 1 | No.: 6 | | SCALE:2:1 |

CONFIDENTIAL