NAME	DATE	TIME (HRS)

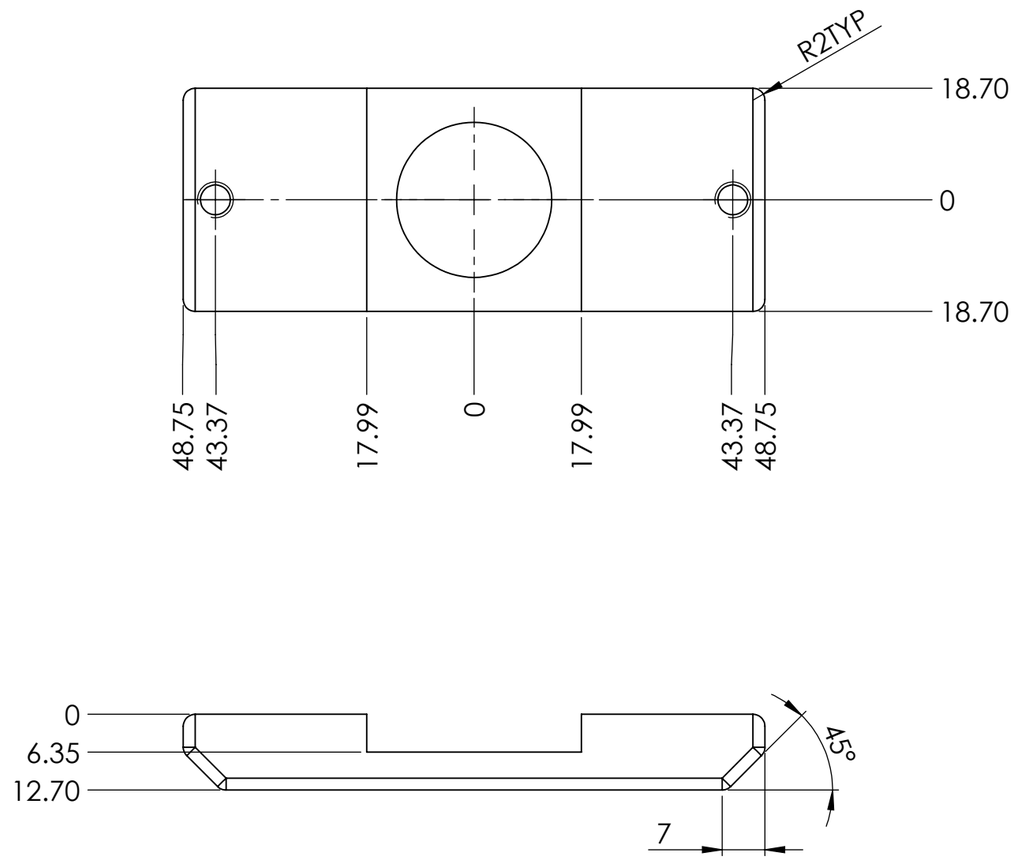

RP003-TRN-202-002

PAG. 1 de 1

E MEDIDA ESPECIAL

ALL TECHNICAL DATA DISCLOSED HERE IN IS THE PROPERTY OF JOYSON SAFETY SYSTEMS AND SHALL NOT BE USED BY ANY OTHER MANUFACTURER, PROCUREMENT OR DISCLOSURE WITHOUT WRITTEN PERMISSION OF THE OWNMER.

AUTHORIZE	TALLER	QUALITY

NOTES:
Pieza libre de filos y rebabas.

REV	DESCRIPTION	DATE	APPROVED

REVIEWS

TOTAL OF PIECES: 1 Pza.

ANG. PROF

UNLESS OTHERWISE SPECIFIED

TOLERANCES DIMENSIONS	ISO 2768-1 mK-E ASME Y14.5M-1994	
MM	INCHES	ANGLES
+.1 -.1	+.004 -.004	+1° -1°

MATERIAL: A2

SURFACE TREATMENT: Pavonado

HARDNESS: 58-60 HRC

JOYSON SAFETY SYSTEMS

APPROVALS		DATE
DESIGNER	JEC	30/06/2022
REVIEW	JEC	30/06/2022

JOYSON TECHNICAL CENTER

MODEL NAME | SERIES No

MACHINE NAME

PART NUMBER: RP003-TRN-202-002

SIZE: **B** | PART NAME: Botador | REV.

ESCALE: 1:1 | DRAWING IN MILLIMETERS