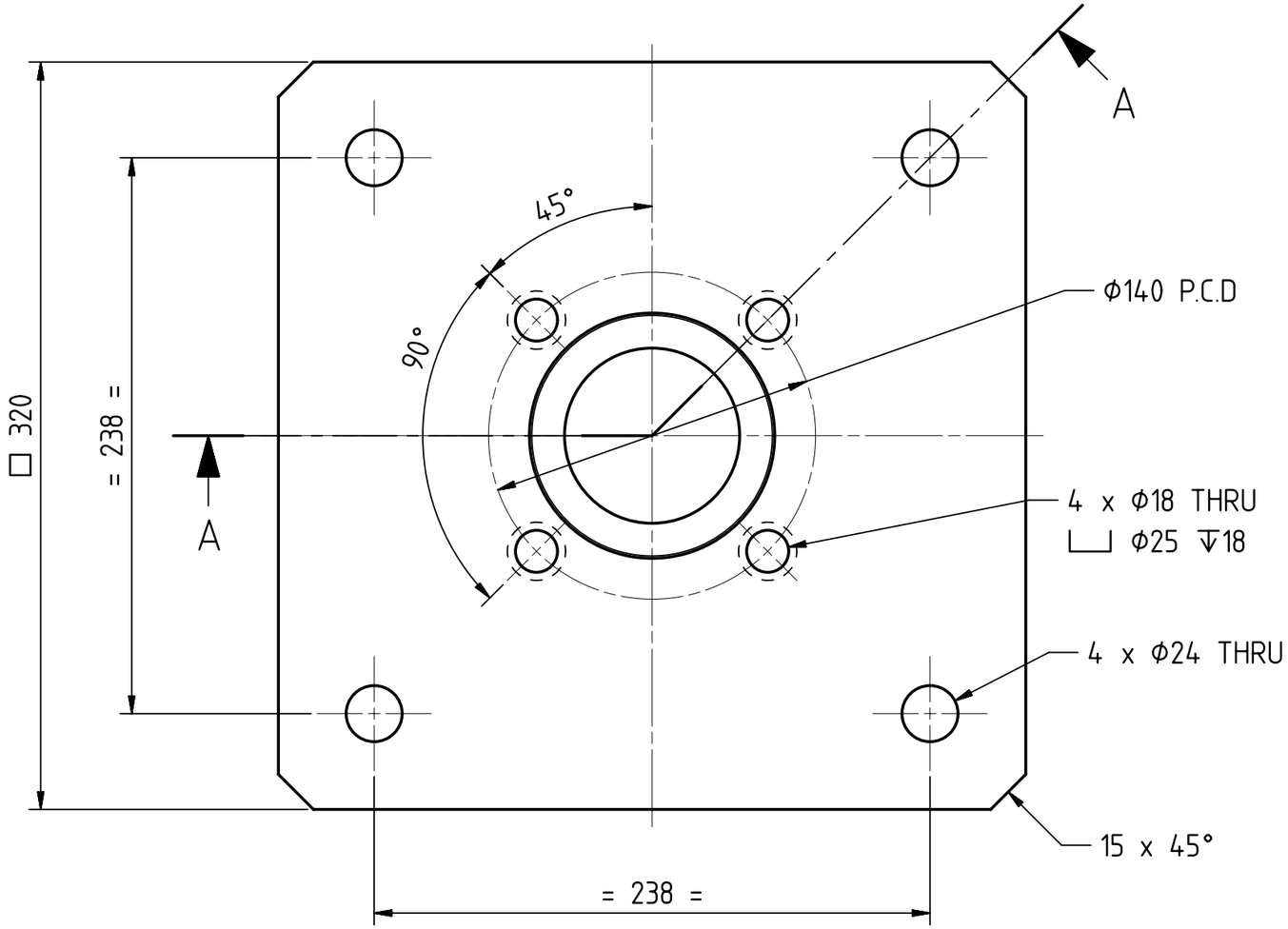

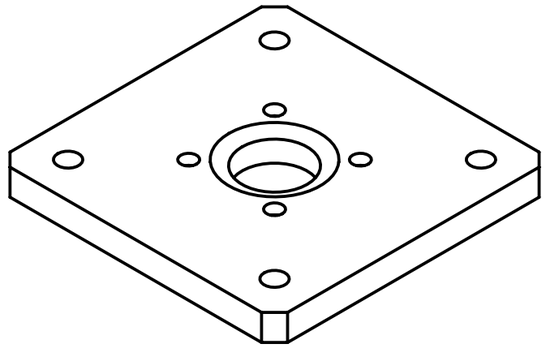

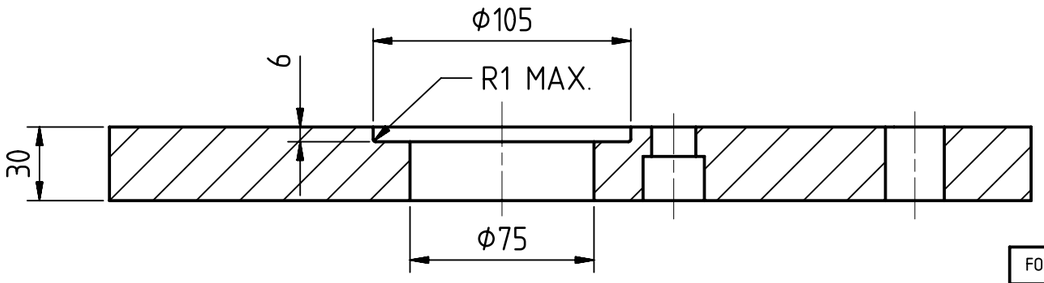

SECTION A-A

NOTE: 1. MACHINE ALL OVER.
2. REMOVE ALL BURRS AND SHARP EDGES.
3. UNMENTIONED CHAMFERS TO BE 0,5 x 45°

MATERIAL : WARMAN CODE E02 UNLESS OTHERWISE SPECIFIED.

ESTIMATED MASS : 22 kg

ENCUMBRANCE : □ 320 x 30

REV	DESCRIPTION	DATE	REF NO	BY	CHK
4					
3					
2					
1					

FOR LIMITS OF UNTOLERANCED DIMENSIONS REFER TO DRG. A4-15895.

OFFICE OF ORIGIN : BANGALORE

SCALE: 2:5

APP: MB

CHK: VHB

DRN: SOWBHAGYA

DATE: 24NOV2014

SHEET 1 OF 1

Copyright © Weir Minerals India (Pvt) Ltd. 2014
Weir Minerals India (Pvt) Ltd ("the Company") is the owner of the copyright and all confidential information in this drawing.

The drawing must not be copied in whole or in part, in any form or by any means, and the information in it must not be disclosed to any person, or used for any purpose other than the specific purpose for which it has been provided, without the prior written consent of the Company.

PRODUCT
ISOGATE®
Slurry Valves

WEIR MINERALS

TITLE
WS 12'' KNIFE GATE VALVE
ADAPTER PLATE - WS12031-5E02
TO SUIT F14 ISO STANDARD

SHEET SIZE	DRAWING No	REVISION
A3	A583248	0