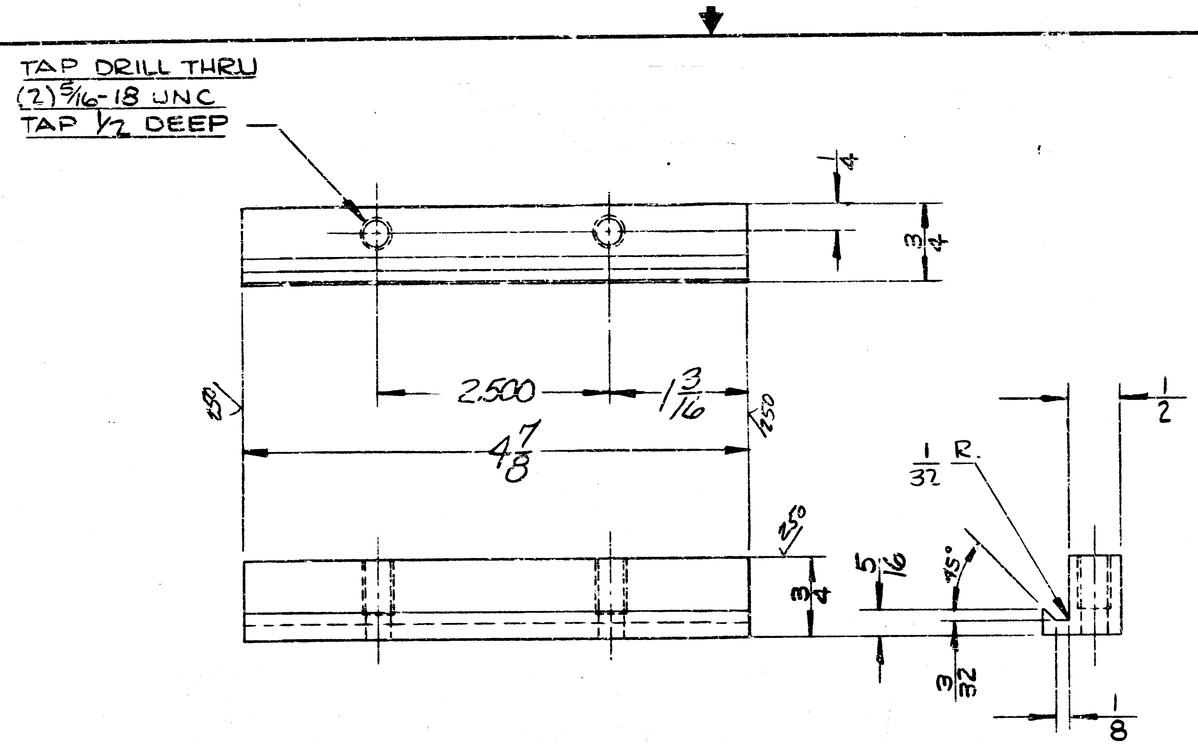

"INFORMATION CONTAINED HEREIN CONSTITUTES PROPRIETARY CONFIDENTIAL INFORMATION OF OWENS-ILLINOIS, AND IS ACCEPTED ONLY SUBJECT TO THAT UNDERSTANDING. IT IS TO BE KEPT CONFIDENTIAL AND NOT COPIED, USED, OR CONVEYED TO OTHERS WITHOUT OWENS-ILLINOIS' WRITTEN AUTHORIZATION."

USED ON ASSEMBLY NO. OIS-01306

I		D	
H		C	
G		B	
F		A	
E		CHANGES	

UNLESS SPECIFIED:
FINISHED SURFACE ROUGHNESS 125
FINISHED DIMENSIONS – FRACTIONAL ±.015
DECIMAL ±.005
BREAK SHARP EDGES MARK PART NUMBER AT (X)

NAME CLAMP PLATE

DRAWN	CHECKED	DATE	SCALE
JJP		1-25-77	FULL

MATERIAL TYPE - 2024-T351 ALUMINUM
MAY BE EXTRUDED

OWENS-ILLINOIS
DRAWING NUMBER
OIS-23-1421
SHEET ___

Impresión generada por: Jesus Angel Garcia Saldaña
AUTORIZADO
FECHA DE IMPRESIÓN: 10/06/2022
ADN - ADMINISTRACIÓN DE DIBUJOS NETWORK