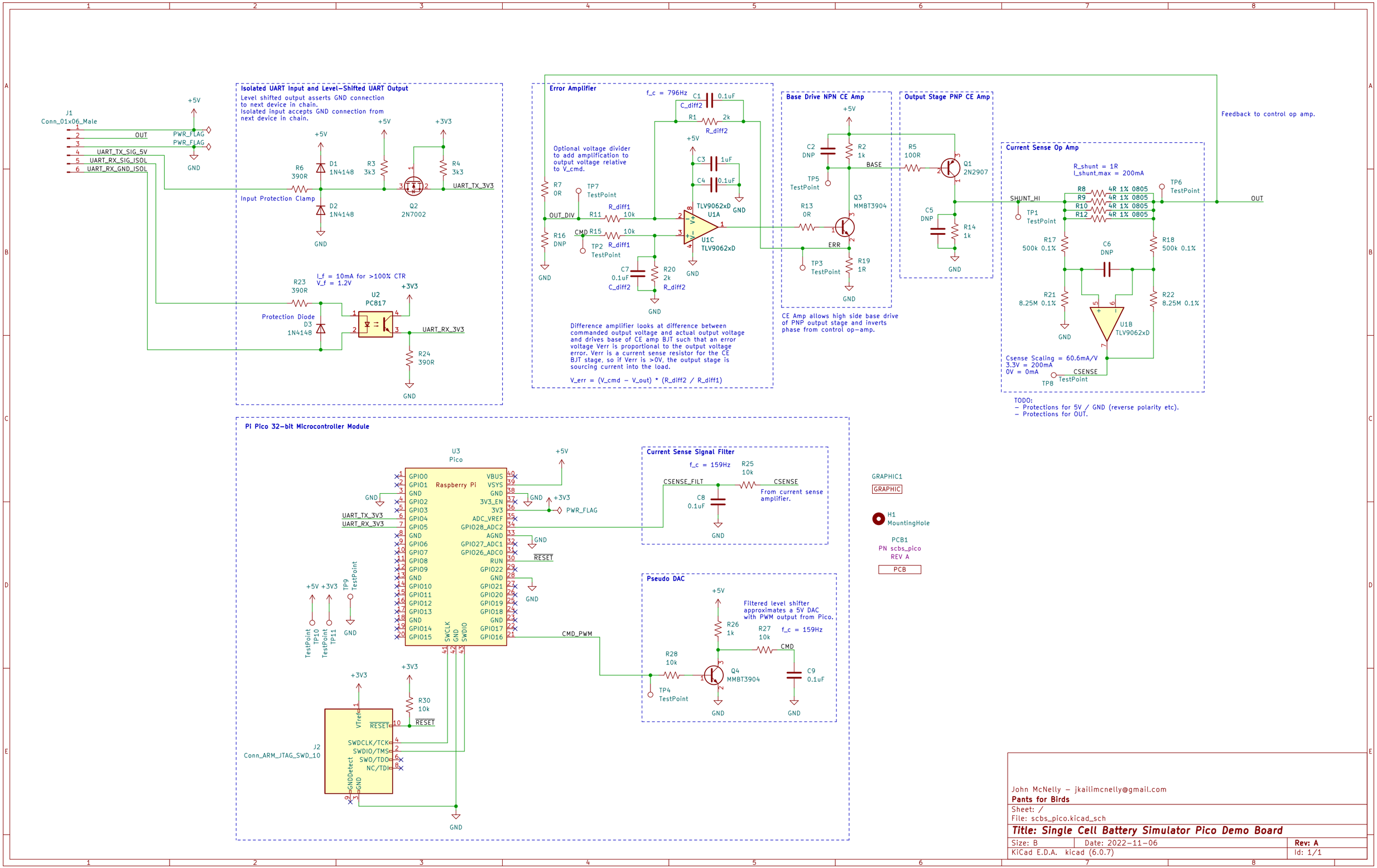

John McNelly — jkailimcnelly@gmail.com
Pants for Birds

Sheet: /
File: scbs_pico.kicad_sch

Title: Single Cell Battery Simulator Pico Demo Board

Size: B	Date: 2022-11-06	Rev: A
KiCad E.D.A. kicad (6.0.7)		Id: 1/1