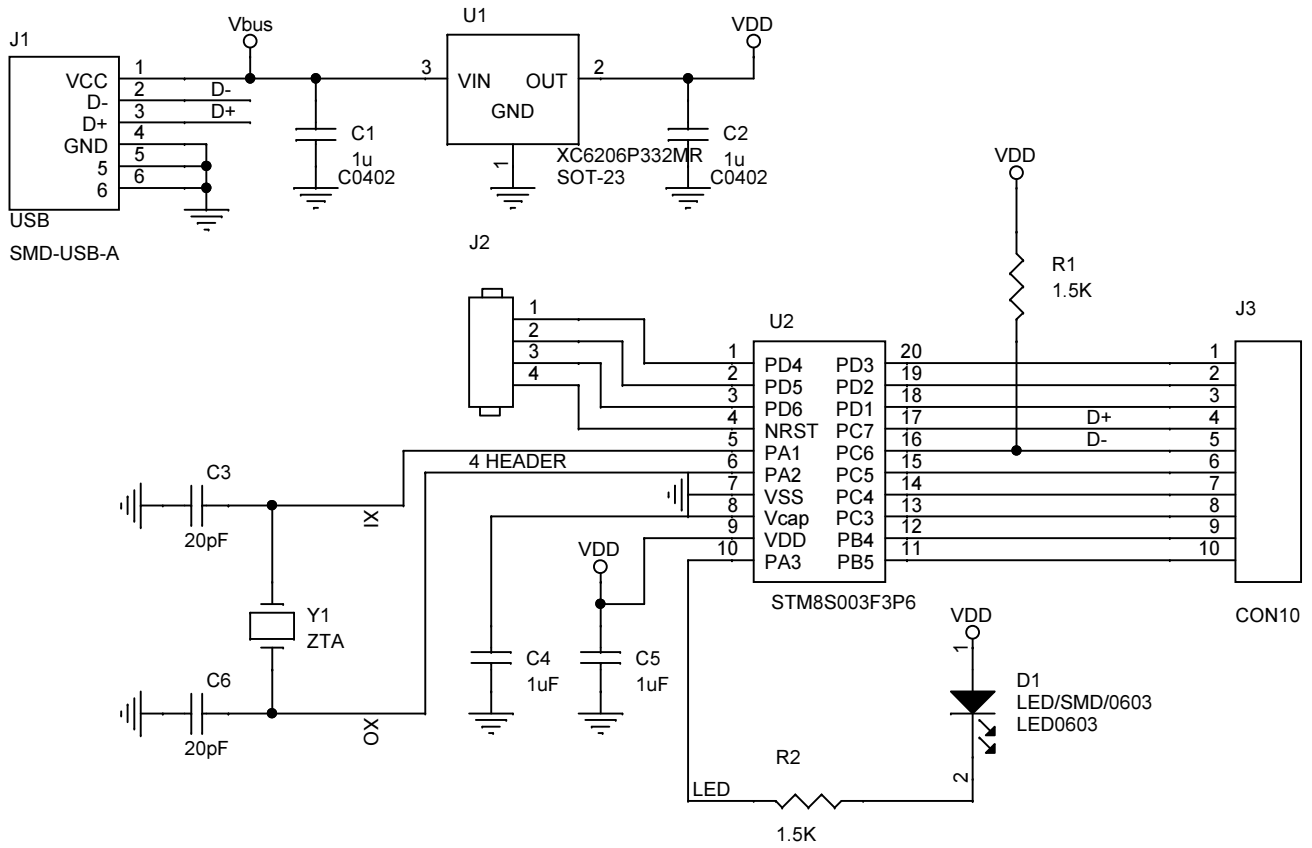

Title	<Title>	
Size A	Document Number <Doc>	Rev <RevCode>
Date: Tuesday, June 17, 2014	Sheet 1 of 1	