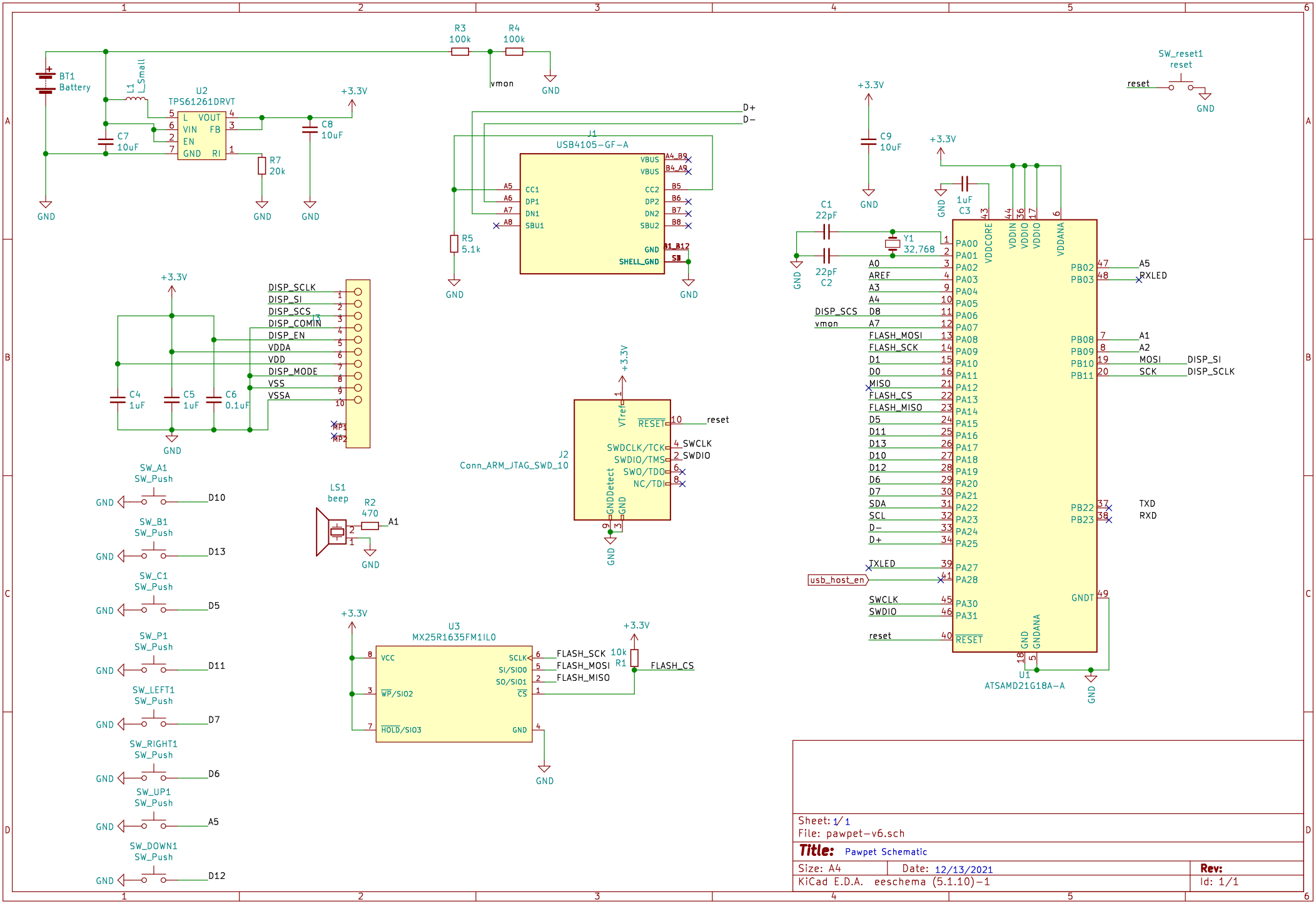

Sheet: 1/1
File: pawpet-v6.sch

Title: Pawpet Schematic

Size: A4 | Date: 12/13/2021 | **Rev:**

KiCad E.D.A. eeschema (5.1.10)-1 | Id: 1/1