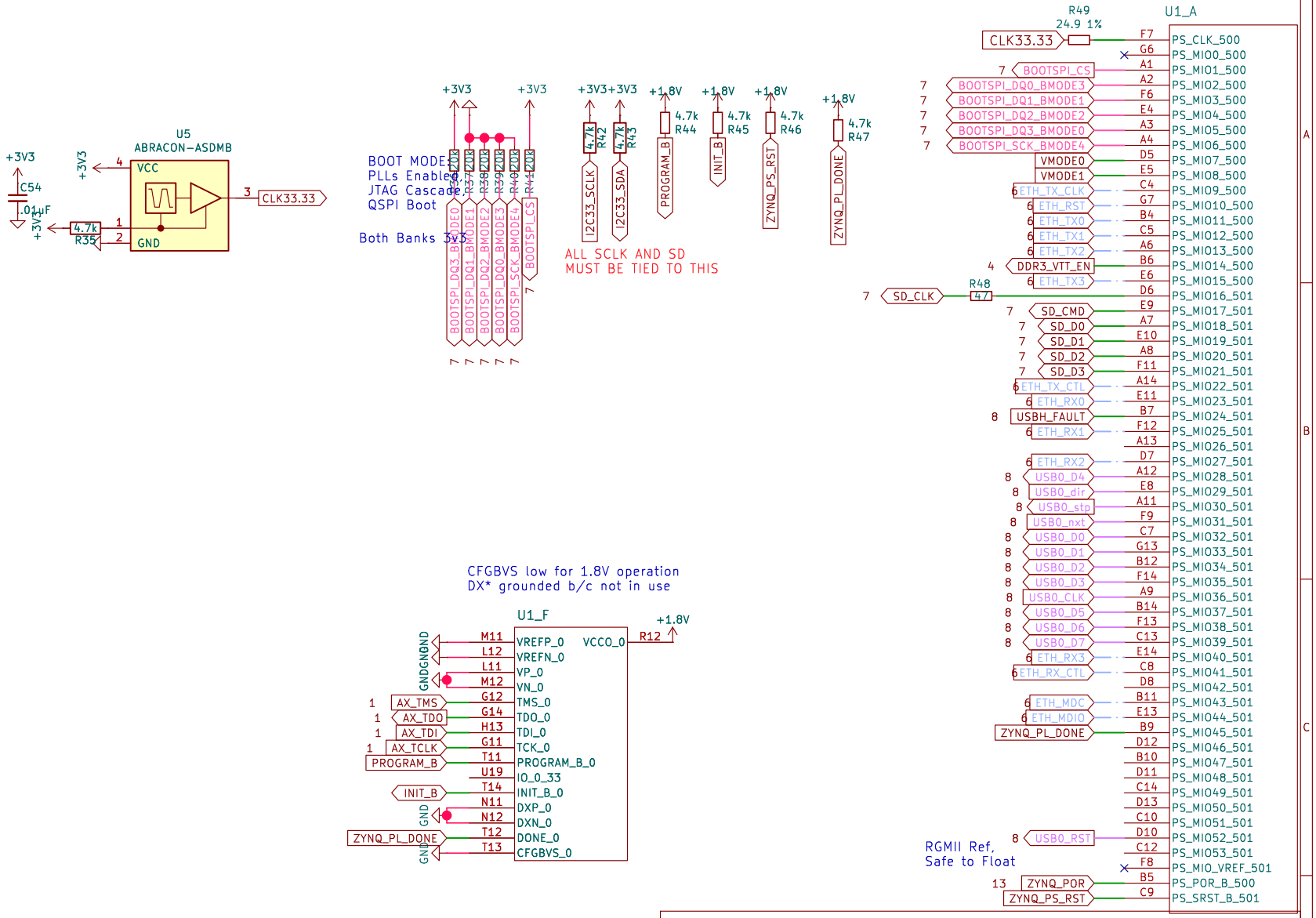

Proprietary

Magma Space

Sheet: /Zynq_PS_CONF/

File: Zynq_PS_CONF.kicad_sch

Title: ISS Tech Demo MCU

Size: A4	Date: 2026-03-20	**Rev: REV03**
KiCad E.D.A. 9.0.7		Id: 5/13