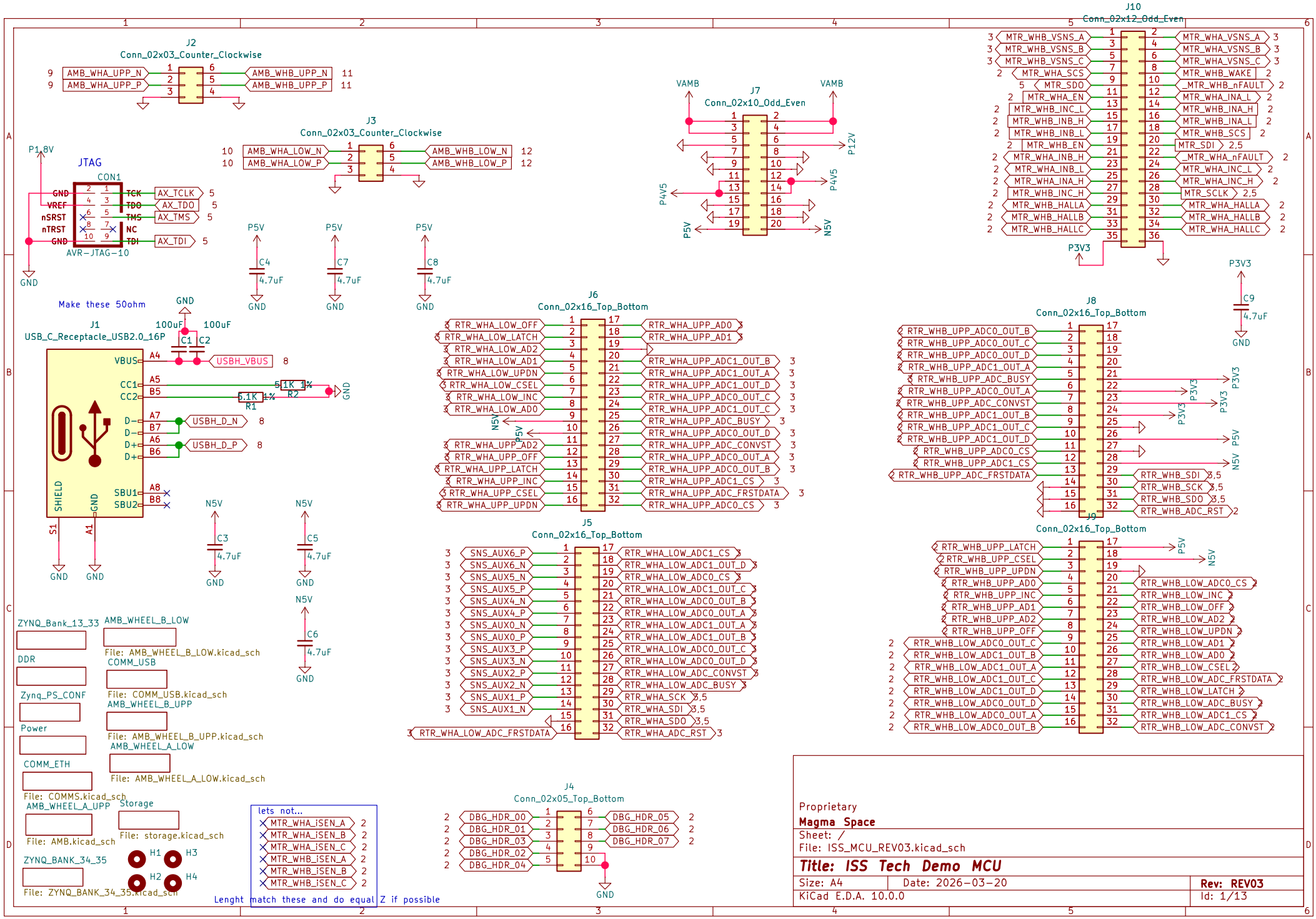

Net Class	Clearance (mm)	Track Width (mm)	Via Size (mm)	Via Drill (mm)	Diff Pair Width (mm)	Diff Pair Gap (mm)	Example Nets	Notes
DDR3_SE	0.1	0.114	0.35	0.2			DDR3_DQ*, DDR3_A*, DDR3_DM*, DDR3_BA*, DDR3_CS#, DDR3_RAS#, DDR3_CAS#, DDR3_WE#, DDR3_CKE, DDR3_ODT, DDR3_DRST#	40Ω SE. Run stackup solver — 0.114 mm is 4-layer FR4 estimate on 0.102 mm diel.

For all banks:
PWMH must go to a "P" Port
PWML must go to the corresponding "N" port

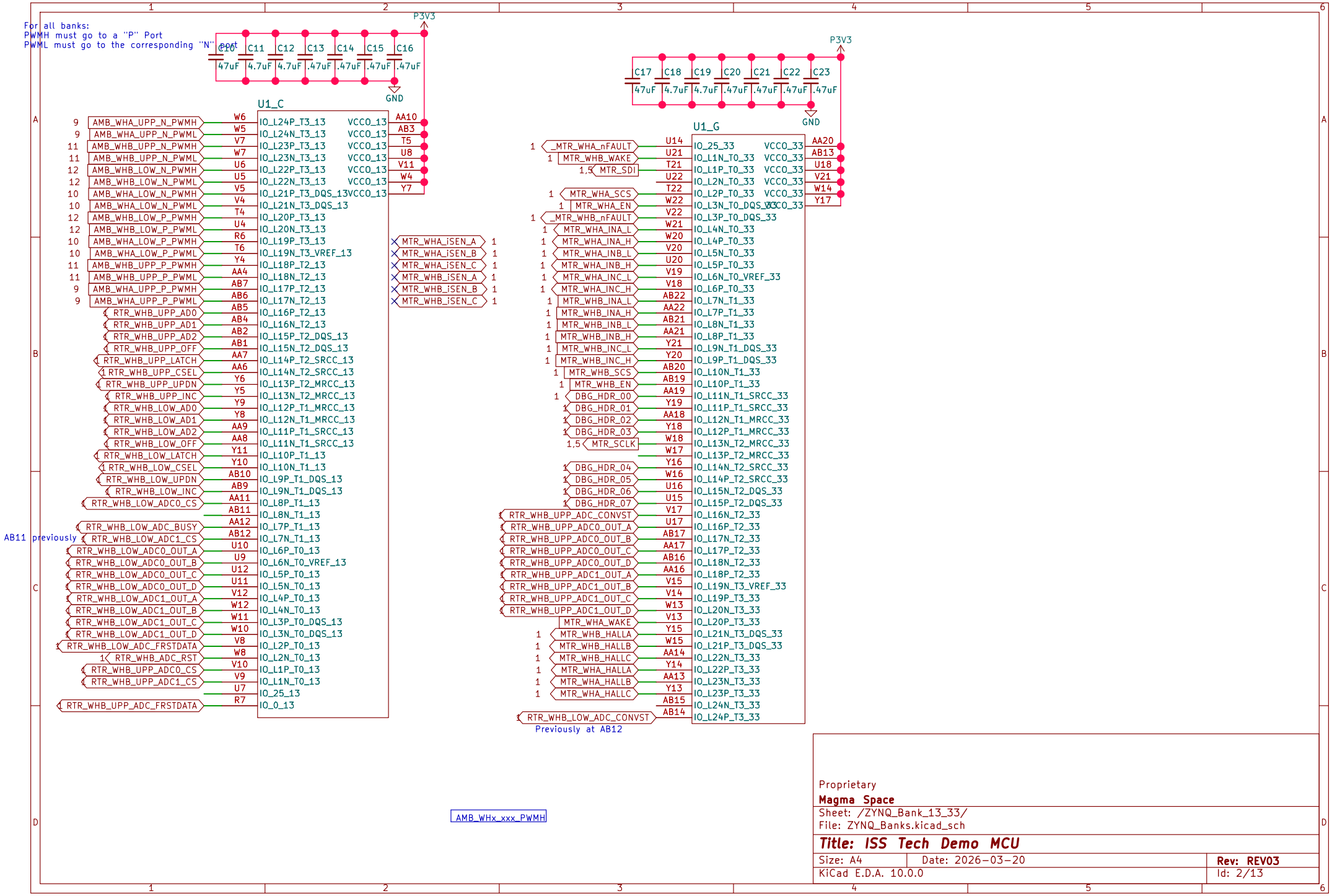

Proprietary
Magma Space
Sheet: /ZYNQ_Bank_13_33/
File: ZYNQ_Banks.kicad_sch

Title: ISS Tech Demo MCU

Size: A4	Date: 2026-03-20	**Rev: REV03**
KiCad E.D.A. 10.0.0		Id: 2/13

RTR_WHB_SCK / SDI / SDO	–	50Ω (no Z 50Ω)	–	–	–	Connected on page 5	RTR_WHB_SCK / SDI / SDO
SNS_AUX0-6_P/N (14 signals)	–	100Ω analog	Self P↔N	0.127	50.8	Needs routing to headers	SNS_AUX0-6_P/N (14 signals)

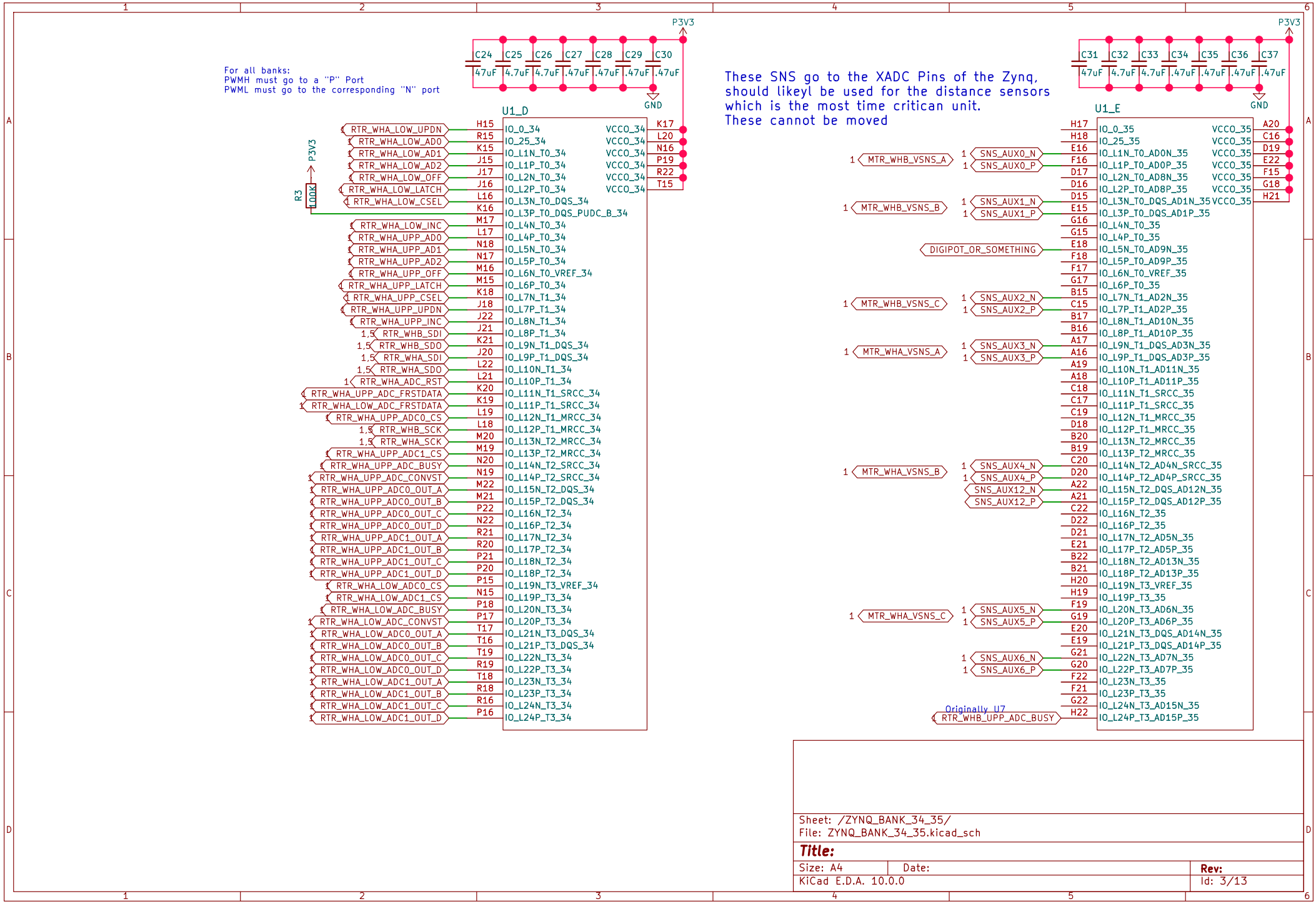

VREF (U2/U4)	—	Ref	—	—	—	Fed from DDR3_VTT	R1/R2 10kΩ divider. Quiet routing.

DDR3L trace impedance:
40ohm differential
80ohm single

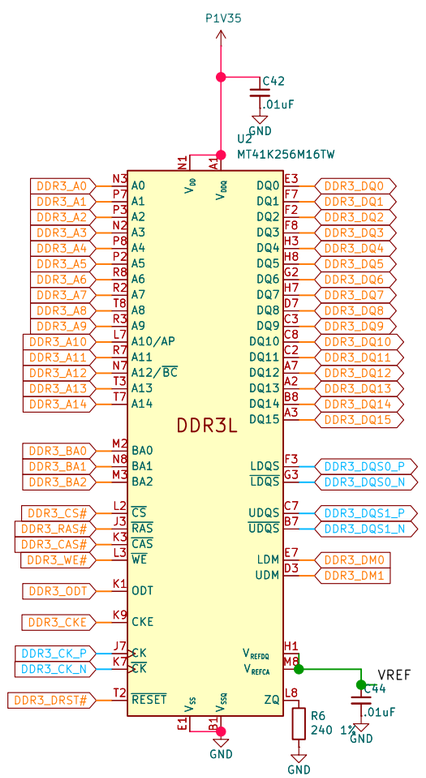

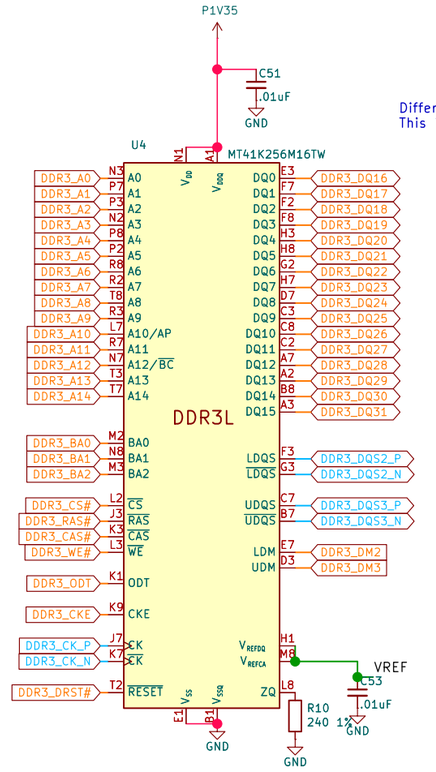

Differential termination at end / first break
This is the only P-to-N termination in ZC702 DDR3

Terminations as described in UG933
and shown in ZC702 schematic

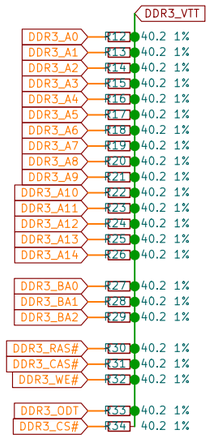

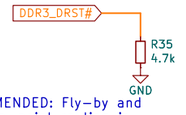

RECOMMENDED: Fly-by and
point-to-point routing is
recommended for optimal
memory performance

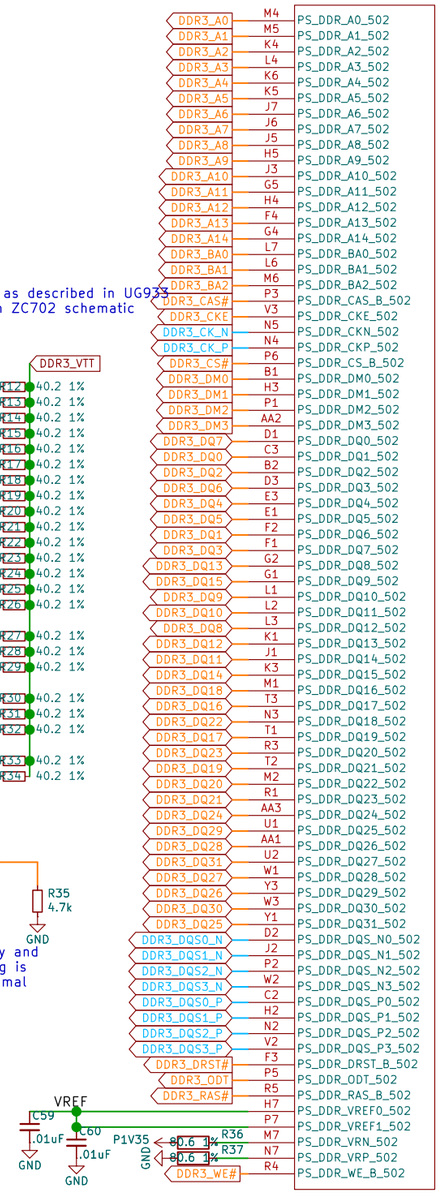

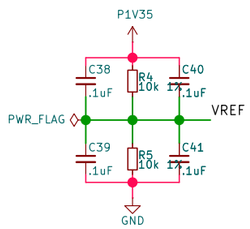

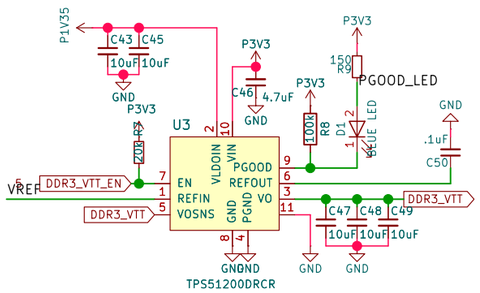

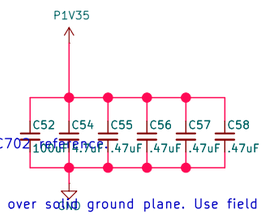

Termination:

40.2Ω series resistors (R9–R31) already placed on all DQ/DQS lines — these are source termination per Zynq UG933.
80.6Ω differential termination (R33, R34) at the far end of the CK differential pair. This is the only P-to-N termination, matching ZC702 reference.
R32 (4.7kΩ) pull-up on RESET# to +1V35 — correct.
ZQ calibration: R3 (240Ω 1%) on U2, R7 (240Ω 1%) on U4, both to GND — correct.

Stackup recommendation: For 40Ω SE / 80Ω diff on a 4-layer board, target ~4.5 mil trace width on 4 mil dielectric (FR4, εr ≈ 4.2) over solid ground plane. Use field solver for exact geometry.
Length matching budget:

DQ to DQS within byte lane: ±25 mil (±3.7 ps)
CK to address/command group: ±50 mil (±7.4 ps)
CK P-to-N intra-pair: ±5 mil (±0.75 ps)
DQS P-to-N intra-pair: ±5 mil (±0.75 ps)

1066 Mb/s (533 MHz)
Should be attainable by all
speed grades of Zynq

Proprietary
Magma Space
Sheet: /DDR/
File: DDR.kicad_sch

Title: ISS Tech Demo MCU

Size: A3	Date: 2026-03-20	Rev: REV03
KiCad E.D.A. 10.0.0		Id: 4/13

SPI0/SPI1 (MTR/RTR mux)	–	SE	–	–	152.4	See pages 2/3 for per-bus constraints.	SPI0/SPI1 (MTR/RTR mux)
AX_TMS/TDI/TDO/TCLK	–	SE	–	–	–	PL JTAG cascade. Non-critical.	AX_TMS/TDI/TDO/TCLK

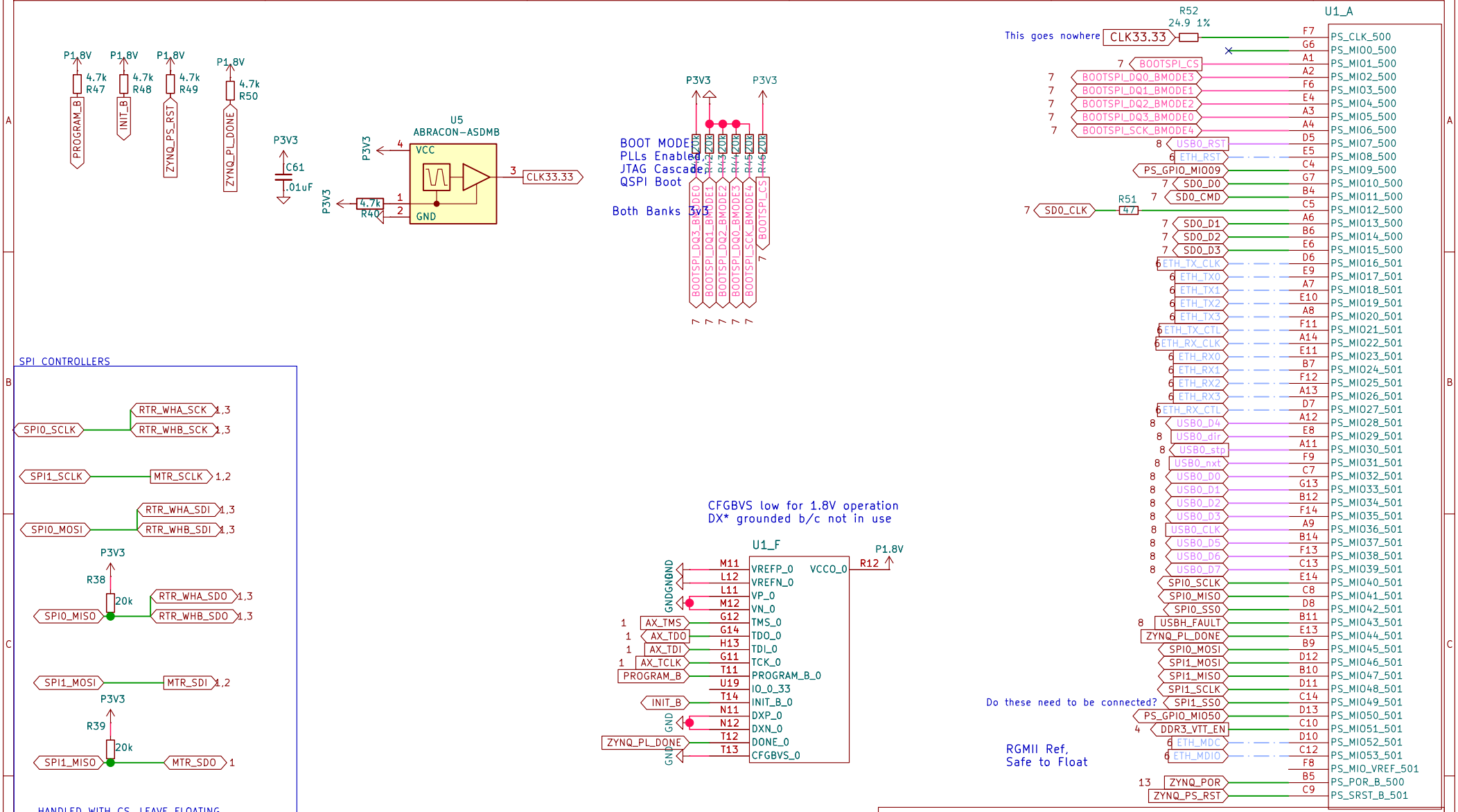

Proprietary

Magma Space

Sheet: /Zynq_PS_CONF/

File: Zynq_PS_CONF.kicad_sch

Title: ISS Tech Demo MCU

Size: A4	Date: 2026-03-20	**Rev: REV03**
KiCad E.D.A. 10.0.0		Id: 5/13

AVDDH (3.3V analog)	–	Power	–	–	–	Through FB1. Place FB1 + decap close to U6.	AVDDH (3.3V analog)
AVDDL / AVDDL_PLL	–	Power	–	–	–	Through FB2/FB3 from +1.2V. Blocked by missing	AVDDL / AVDDL_PLL
25 MHz crystal (U7)	–	Clock	–	–	10.0	SUPPLY guard-ground traces. No vias between pads. < 10 mm.	25 MHz crystal (U7)

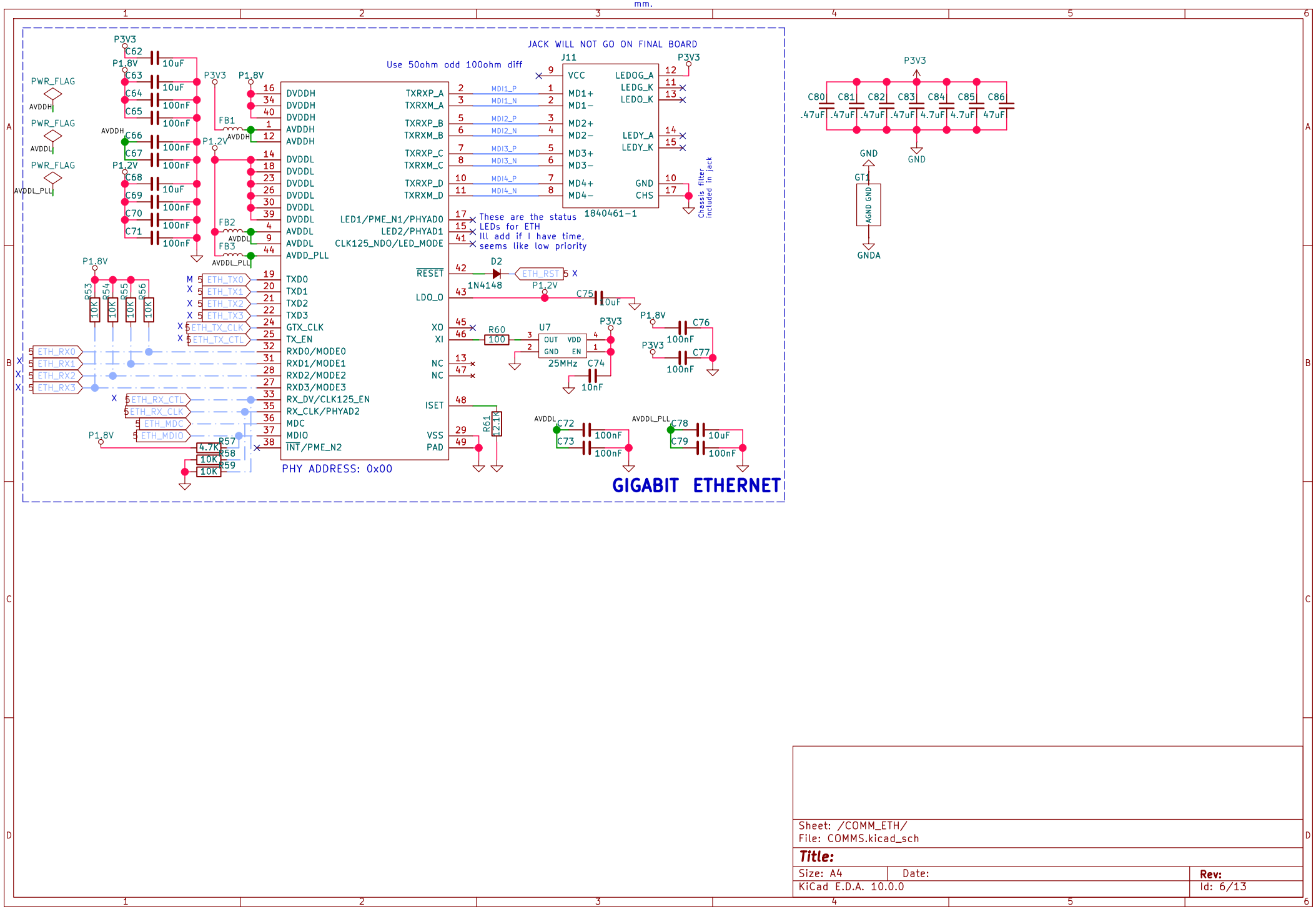

Sheet: /COMM_ETH/
File: COMMS.kicad_sch

Title:

Size: A4	Date:	Rev:
KiCad E.D.A. 10.0.0		Id: 6/13

Non-volatile memory

I will need a second SD Card for the ISS itertion

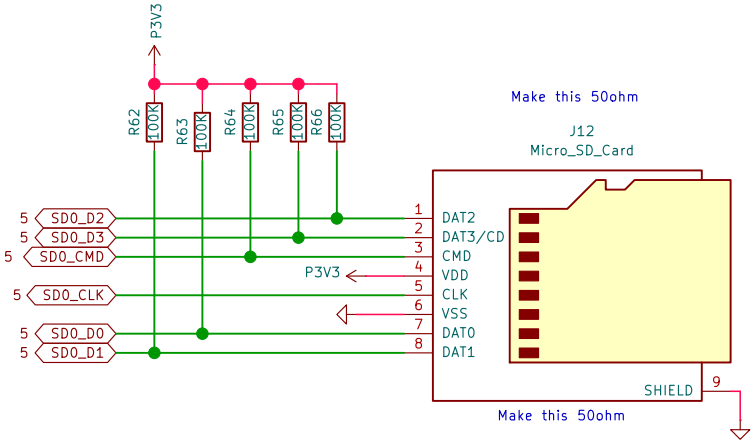

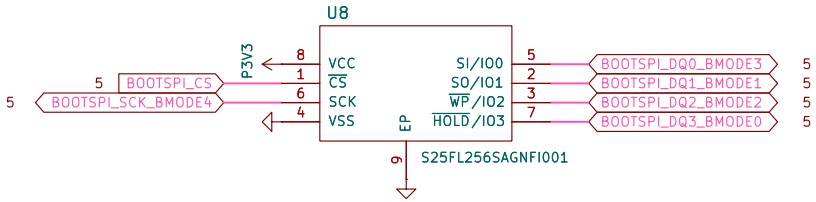

Signal	Z (Ω)	Type	Match To	Budget (mm)	Max Len (mm)	Notes	Signal
BOOTSPI_SCK	50 SE	SE	DQ[0:3]	2.54	50.8	Shared with page 5. 'Make this 50ohm'.	BOOTSPI_SCK
BOOTSPI_DQ[0:3]	50 SE	SE	SCK	2.54	50.8	Shared with page 5.	BOOTSPI_DQ[0:3]
BOOTSPI_CS	–	SE	–	–	50.8	Non-critical timing.	BOOTSPI_CS
SD0_CLK	50 SE	SE	SD_data/cmd	5.08	76.2	'Make this 50ohm'. Series R (R48).	SD0_CLK
SD0_CMD, SD0_D[0:3]	50 SE	SE	SD0_CLK	5.08	76.2	Match to CLK. Series R (R77, R109-R112).	SD0_CMD, SD0_D[0:3]

Sheet: /Storage/
File: storage.kicad_sch

Title:

Size: A4 | Date: | **Rev:**

KiCad E.D.A. 10.0.0 | Id: 7/13

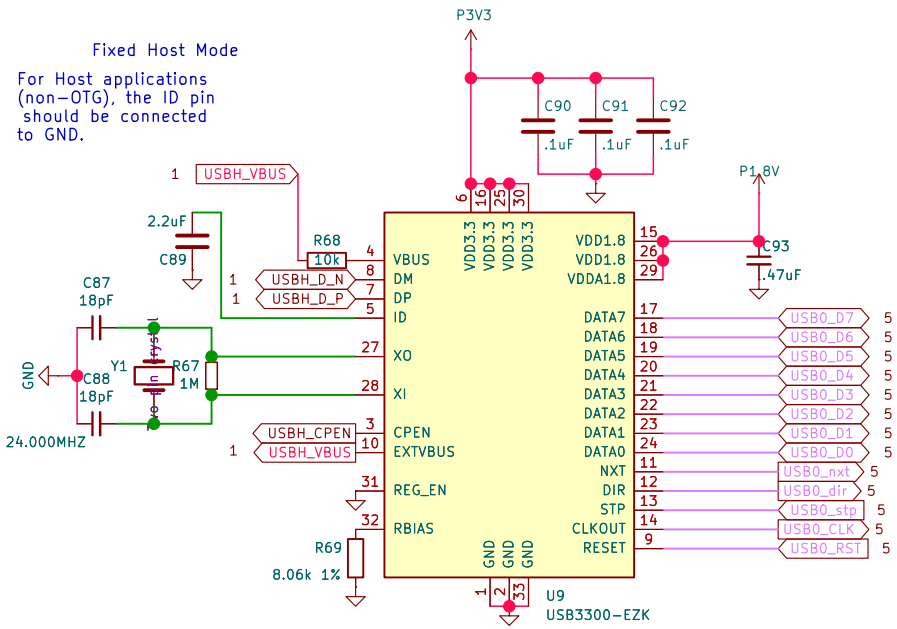

Signal	Z (Ω)	Type	Match To	Budget (mm)	Max Len (mm)	Notes
USBH_D_P / D_N	90 diff	Diff	Self P↔N	0.127	101.6	USB-C ↔ USB3300. Tight coupling, min stubs
USB0_D[0:7] (ULPI)	50 SE	SE	USB0_CLK	5.08	76.2	See page 5. Match all to CLK.
USB0_CLK	50 SE	SE	—	—	76.2	60 MHz ULPI ref clock.
USB0_DIR, NXT, STP	50 SE	SE	USB0_CLK	5.08	76.2	Match to CLK group.
RBIAS (R80)	—	Analog	—	—	5.0	8.06kΩ 1% to GND. Minimize parasitic C. < 5 mm trace.
Y1 (24 MHz crystal)	—	Clock	—	—	10.0	Guard ground. No vias between pads. < 10 mm trace.
USBH_VBUS	—	Power	—	—	—	500 mA from MIC2025. Wide trace.
CC1 / CC2	—	—	—	—	—	*** UNCONNECTED — need 5.1kΩ pull-downs for host mode ***

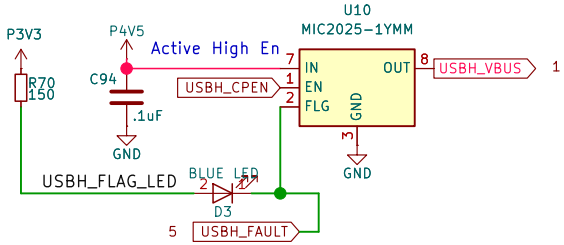

Sheet: /COMM_USB/
File: COMM_USB.kicad_sch

Title:

Size: A4 | Date: | **Rev:**
KiCad E.D.A. 10.0.0 | Id: 8/13

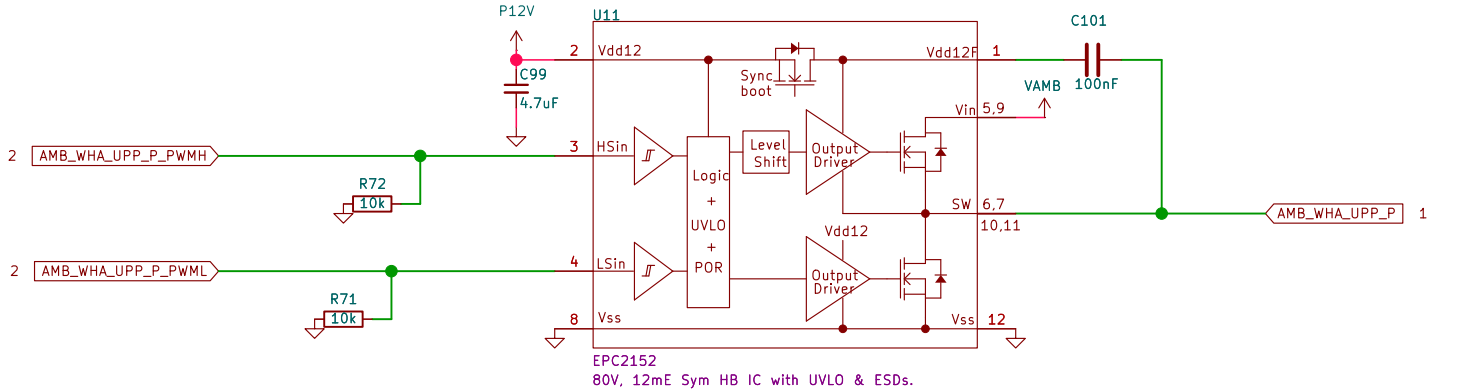

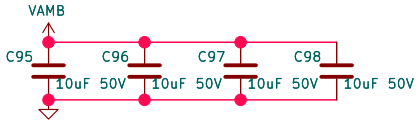

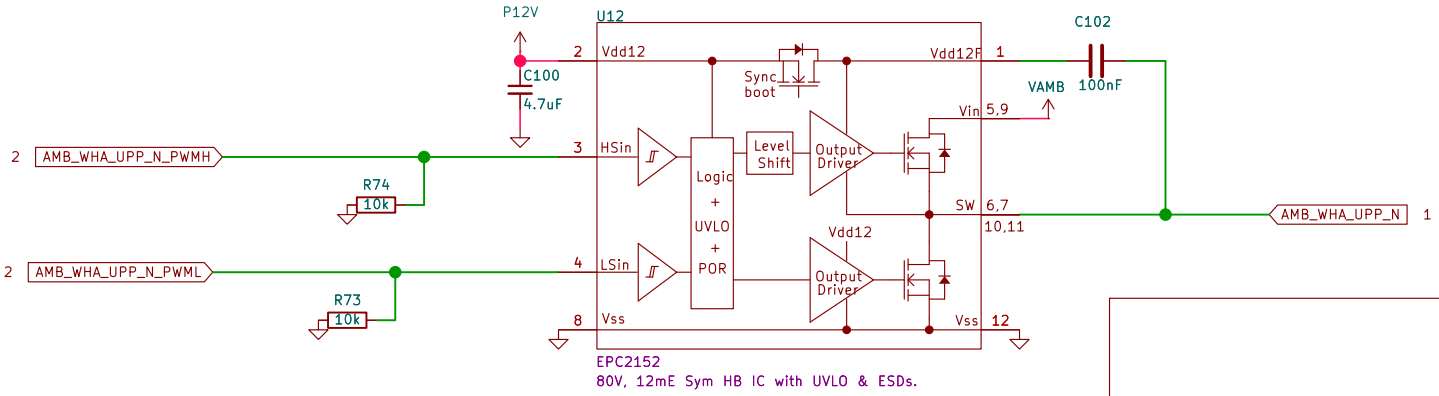

Sheet: /AMB_WHEEL_A_UPP/
File: AMB.kicad_sch

Title:

Size: A4	Date:	Rev:
KiCad E.D.A. 10.0.0		Id: 9/13

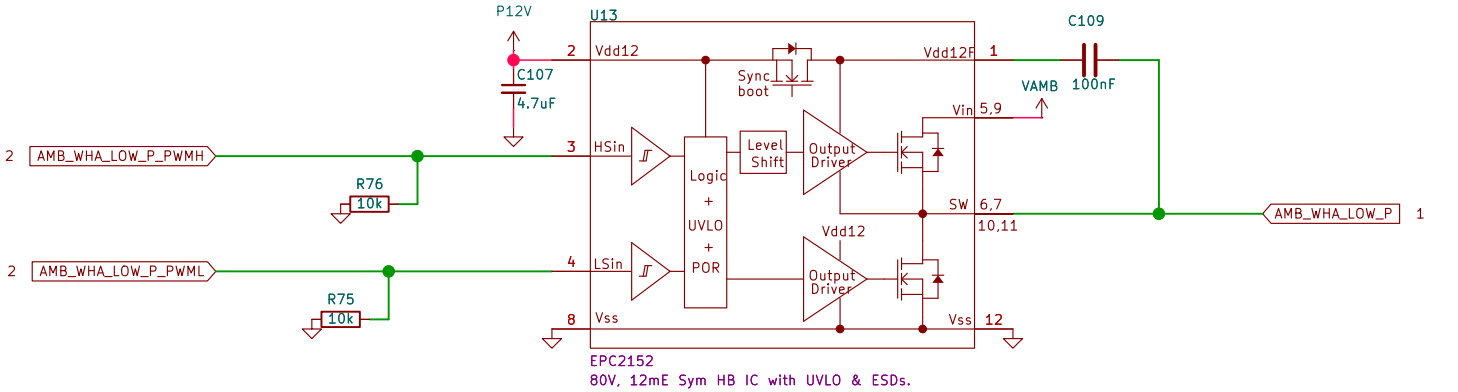

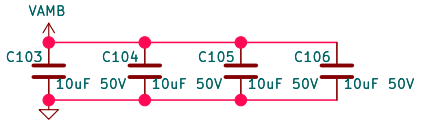

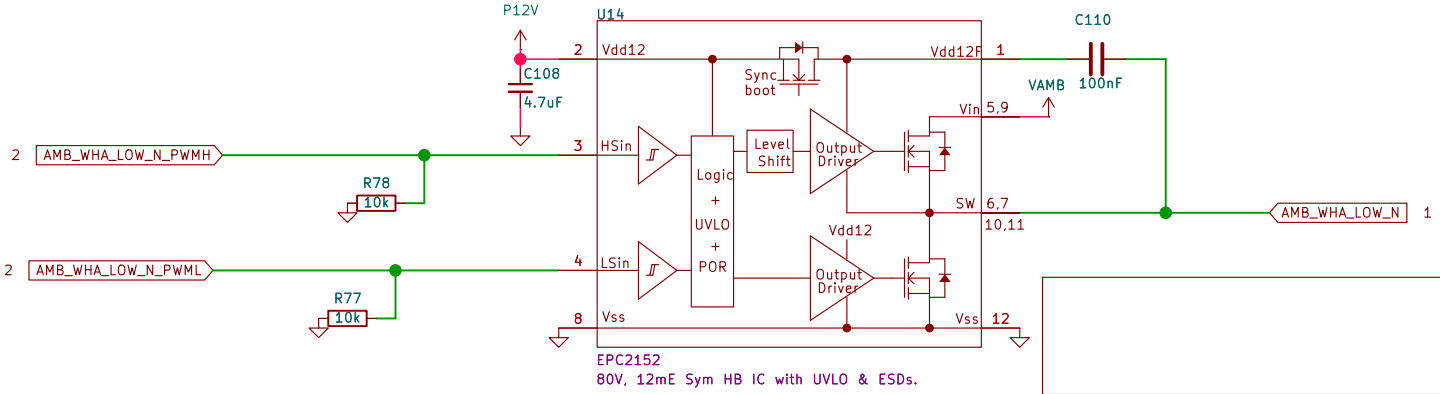

Sheet: /AMB_WHEEL_A_LOW/
File: AMB_WHEEL_A_LOW.kicad_sch

Title:

Size: A4	Date:	**Rev:**
KiCad E.D.A. 10.0.0		Id: 10/13

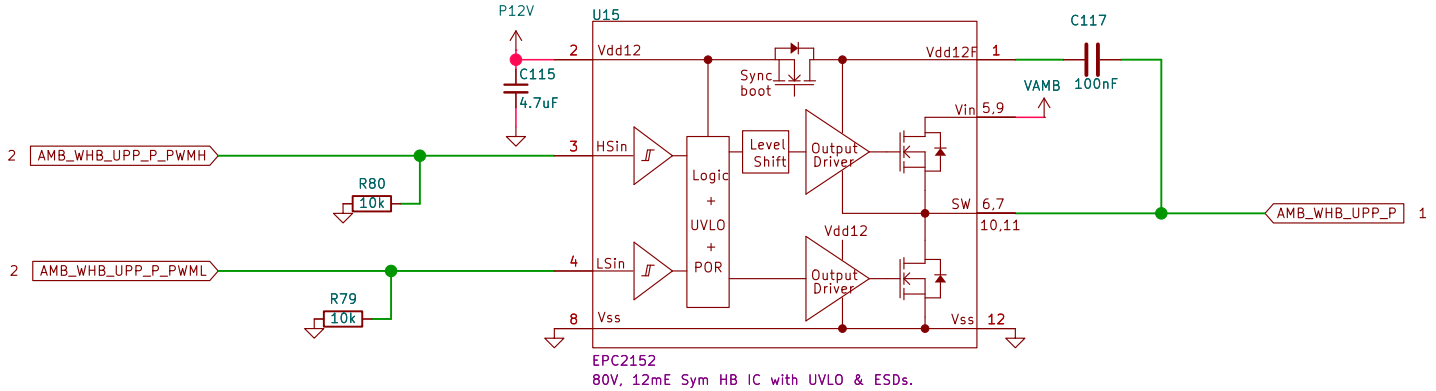

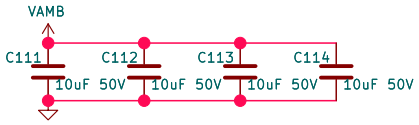

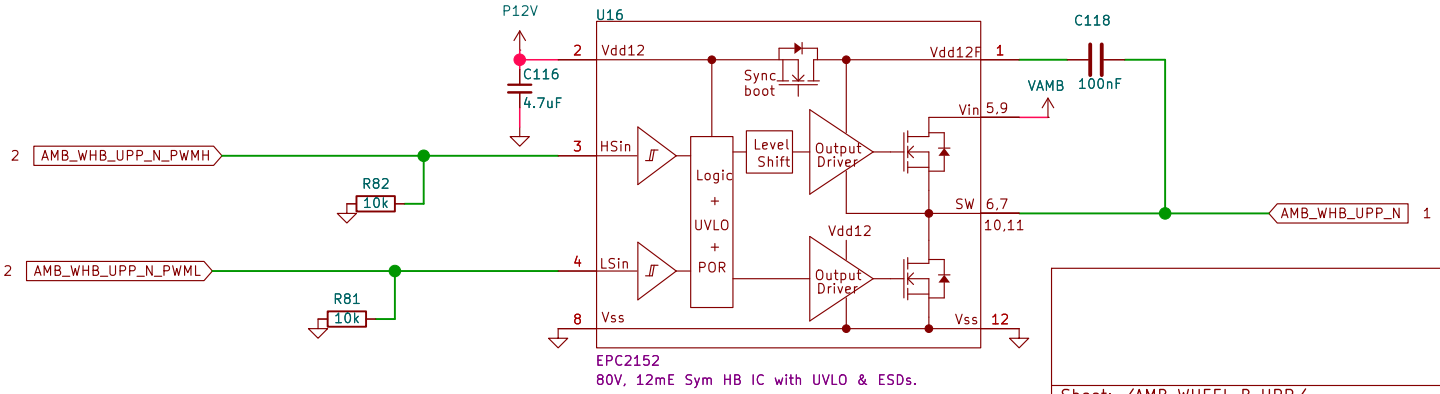

Sheet: /AMB_WHEEL_B_UPP/
File: AMB_WHEEL_B_UPP.kicad_sch

Title:

Size: A4	Date:	**Rev:**
KiCad E.D.A. 10.0.0		Id: 11/13

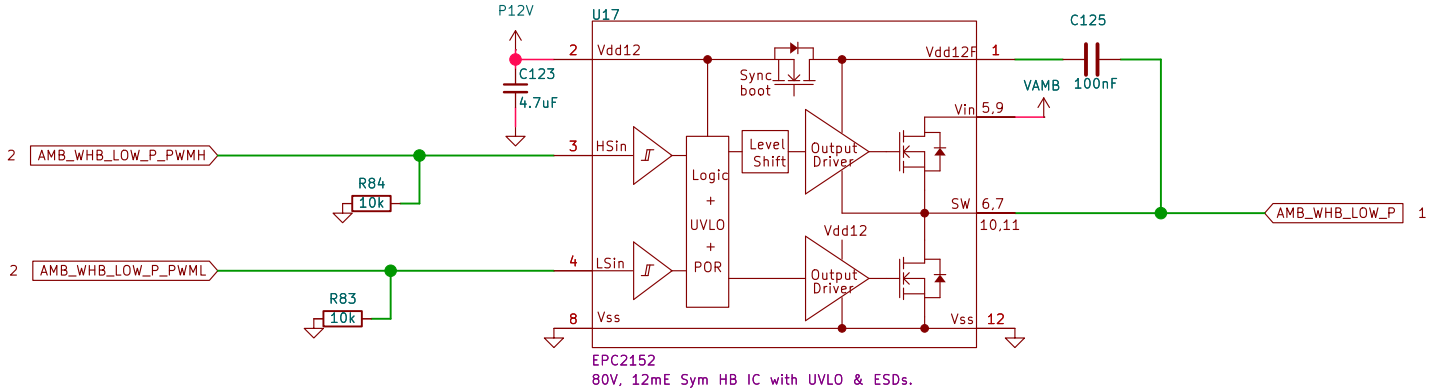

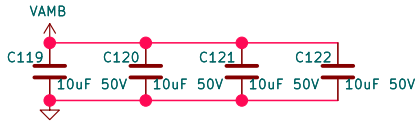

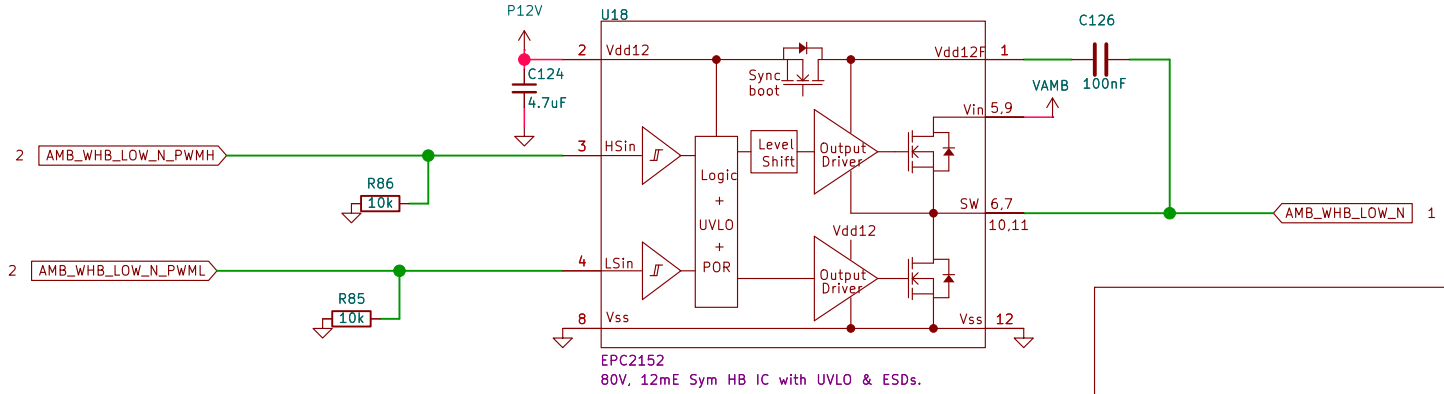

Sheet: /AMB_WHEEL_B_LOW/
File: AMB_WHEEL_B_LOW.kicad_sch

Title:

Size: A4	Date:	Rev:
KiCad E.D.A. 10.0.0		Id: 12/13

VCCPINT is a 1.0V nominal supply that powers all of the PS internal logic circuits. This supply can be combined with VCCINT if the system does not require the PL supply to be powered down independent of the PS.

Same with AUX

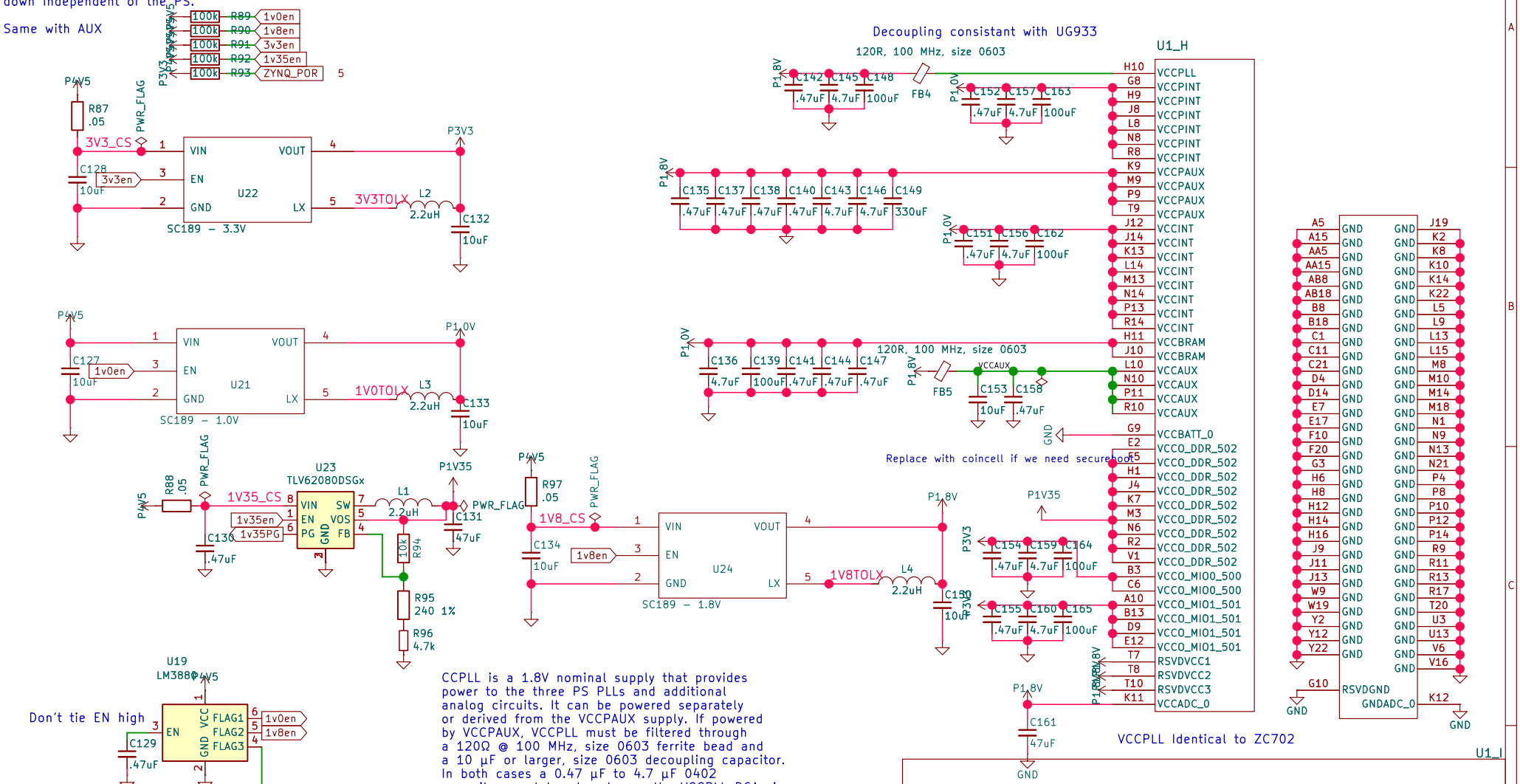

CCPLL is a 1.8V nominal supply that provides power to the three PS PLLs and additional analog circuits. It can be powered separately or derived from the VCCPAUX supply. If powered by VCCPAUX, VCCPLL must be filtered through a 120Ω @ 100 MHz, size 0603 ferrite bead and a 10 µF or larger, size 0603 decoupling capacitor. In both cases a 0.47 µF to 4.7 µF 0402 capacitor must be placed near the VCCPLL BGA via.

Sequencing:
PINT (1.0v) then
PAUX and PLL together (1.8v) then
MIO (3v3) and DDR (1v35) then
POR

Proprietary
Magma Space
Sheet: /Power/
File: Power.kicad_sch

Title: ISS Tech Demo MCU

Size: A4	Date: 2026-03-20	Rev: REV03
KiCad E.D.A. 10.0.0		Id: 13/13