MCU GPIO

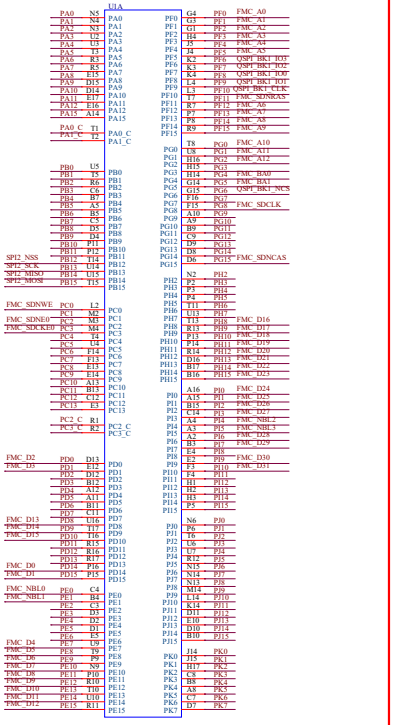

MCU Power

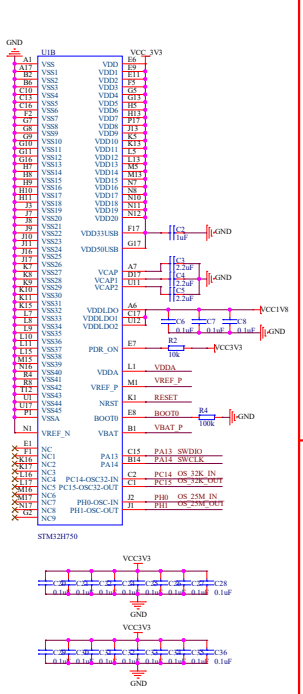

SDRAM

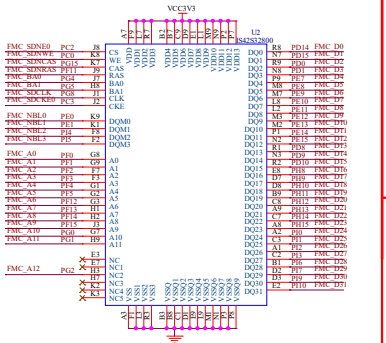

Reset

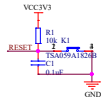

VREF

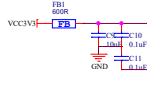

Core GPIO

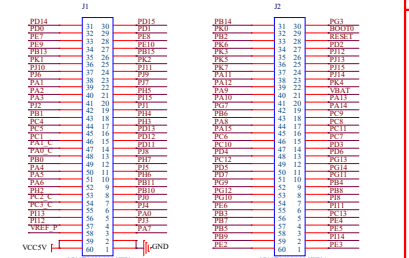

VBAT

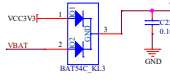

Power

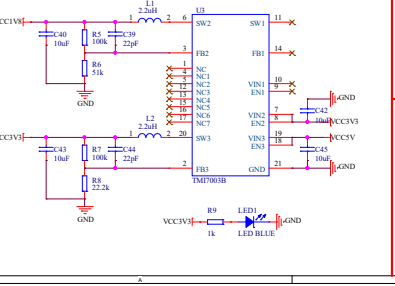

RTC CLK

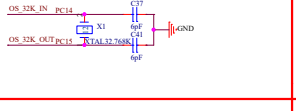

SYS CLK

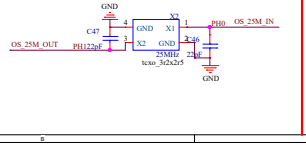

Core Flash

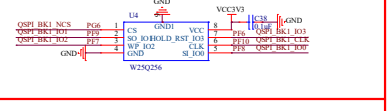

Date Flash

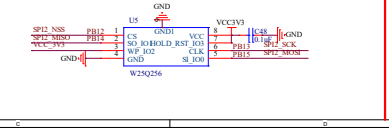

Test

Title	ZIIZ
Size C	Document Number <John@ab0pch.com>
Rev RevC	
Date: Wednesday, January 28, 2026	Sheet of