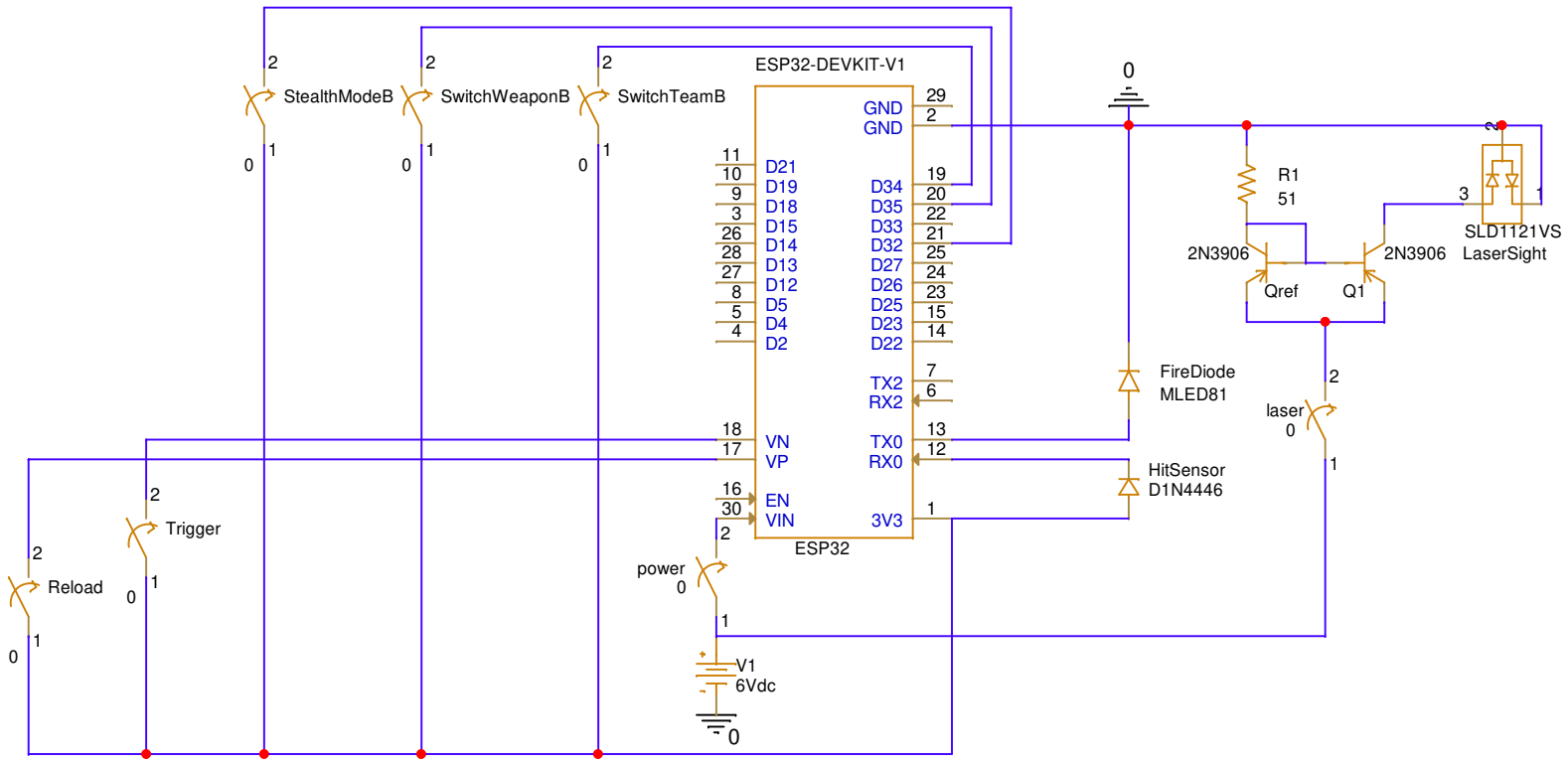

Title	Lazer Gun	
Size A	Document Number <Doc>	Rev 1
Date: Saturday, December 14, 2024	Sheet 1 of 1	