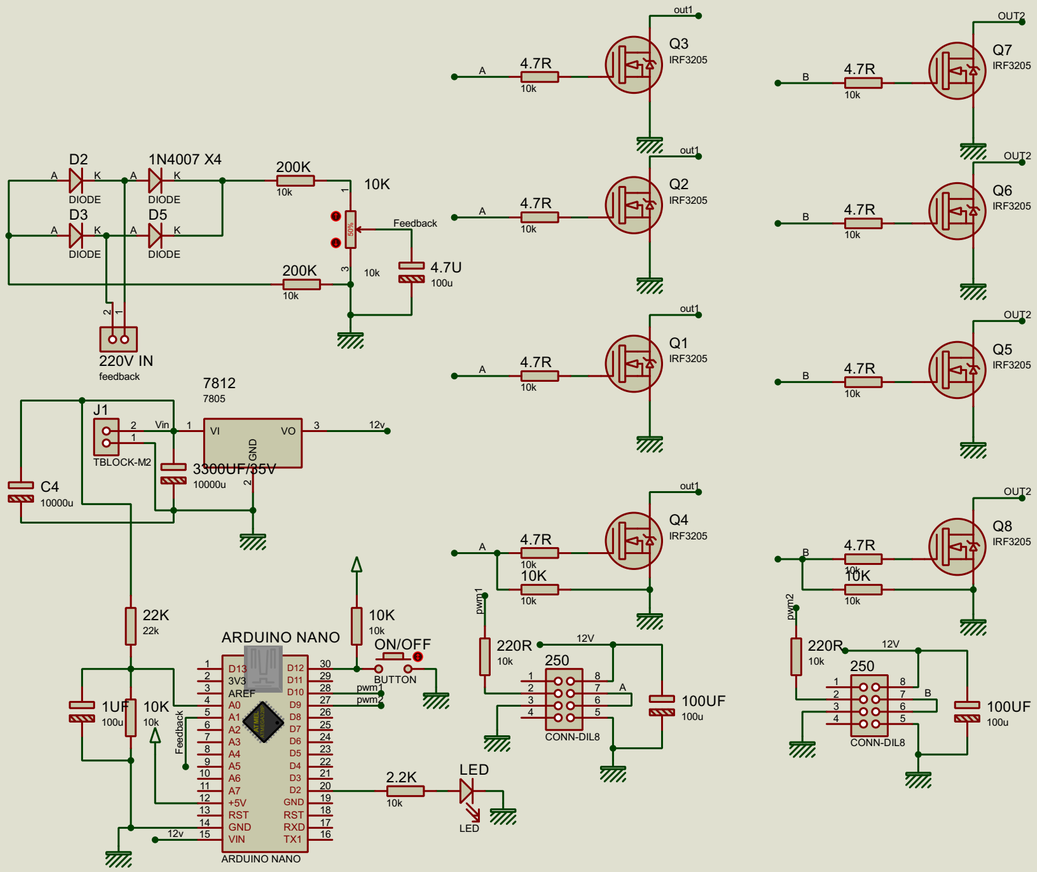

FILE NAME: Sine Arduino nano - feedback.pdsprj	DATE: 11/7/2020
DESIGN TITLE: Sine Arduino nano - feedback.pdsprj	PAGE: 1 OF 1
PATH: E:\MACH DIEN\Sine arduino nano\Sine Arduino nano - feedback.pd	
BY: @AUTHOR REV:@REV	TIME: 8:02:33 PM