FED. SUP CLASS
6250

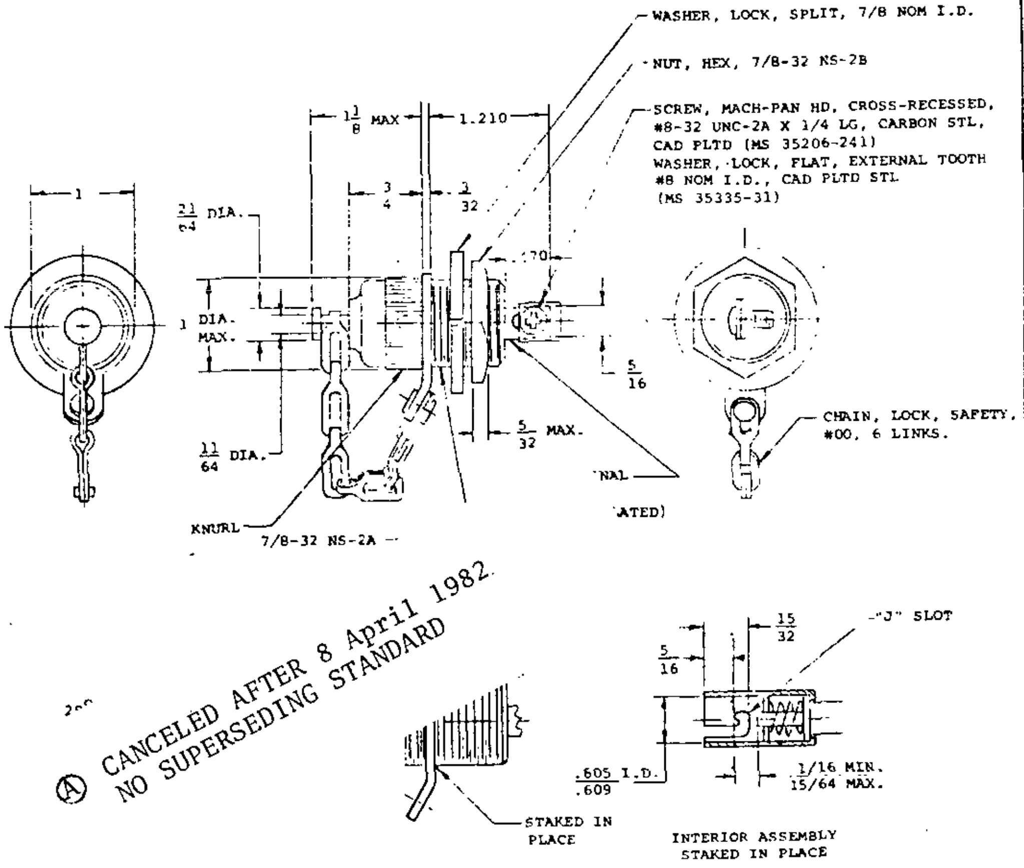
WASHER, LOCK, SPLIT, 7/8 NOM I.D.
NUT, HEX, 7/8-32 NS-2B
SCREW, MACH-PAN HD, CROSS-RECESSED, #8-32 UNC-2A X 1/4 LG, CARBON STL, CAD PLTD (MS 35206-241)
WASHER, LOCK, FLAT, EXTERNAL TOOTH #8 NOM I.D., CAD PLTD STL (MS 35335-31)
1
1 1/8 MAX
1.210
21/64 DIA.
3/4
3/32
.170
1 DIA. MAX.
5/16
5/32 MAX.
11/64 DIA.
CHAIN, LOCK, SAFETY, #00, 6 LINKS.
NAL
ATED)
KNURL
7/8-32 NS-2A
5/16
15/32
"J" SLOT
.605/.609 I.D.
1/16 MIN. 15/64 MAX.
STAKED IN PLACE
INTERIOR ASSEMBLY STAKED IN PLACE

Ⓐ CANCELED AFTER 8 April 1982
NO SUPERSEDING STANDARD

NOTES:

1. ALL DIMENSIONS ARE IN INCHES.
2. EXCEPT WHERE SHOWN, ALL METAL PARTS SHALL BE BRASS, CAD PLTD.
3. THE SAFETY LOCK CHAIN SHALL CONFORM TO FED. SPEC. RR-C-271, TYPE II, CLASS 6.
4. THE LAMPHOLDER IS MOUNTED ON VEHICULAR OR GENERATOR-SET CONTROL PANELS. IT IS USED AS A RECEPTACLE FOR VEHICULAR-TYPE EXTENSION LIGHTS.
5. THE NOMINAL OPERATING VOLTAGE RATING IS 28 VOLTS.
6. MARKING SHALL CONSIST OF THE VOLTAGE RATING, MS NUMBER, AND MANUFACTURER'S NAME, IN ACCORDANCE WITH MIL-STD-130.
7. REFERENCED DOCUMENTS SHALL BE OF THE ISSUE IN EFFECT ON DATE OF INVITATIONS FOR BID.
8. FOR DESIGN FEATURE PURPOSES, THIS STANDARD TAKES PRECEDENCE OVER PROCUREMENT DOCUMENTS REFERENCED HEREIN.

APPROVED 19 March 1964 REVISED Ⓐ 8 APRIL 1982

TOLERANCES: UNLESS OTHERWISE SPECIFIED.
ON FRACTIONS ± 1/64, ON DECIMALS ± .005

P.A. MO(ERDL) Other Cust MC Review interest: MO, MC User interest: None	TITLE LAMPHOLDER, PANEL-MOUNT BAYONET CANDELABRA, NONINDEXING, SINGLE CONTACT, WITH WEATHER-PROOF CAP	MILITARY STANDARD MS 39246
PROCUREMENT SPECIFICATION MIL-L-3661	SUPERSEDES	SHEET 1 OF 1

This military standard is approved by the Department of Defense and is mandatory on all activities. Selection for all new engineering and design applications and for repetitive use shall be made from this document.

DD FORM 1 APR 61 672-1 (Coordinated)

PREVIOUS EDITIONS OF THIS FORM ARE OBSOLETE

Source: https://assist.dla.mil -- Downloaded: 2026-10-23T17:49Z
Check the source to verify that this is the current version before use.