FED. SUP CLASS
5330

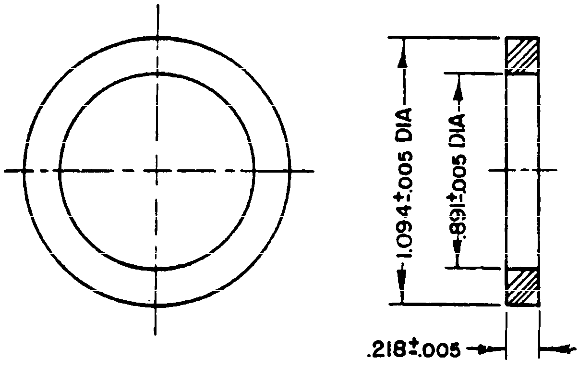

PART NUMBER MS91607-1

Ⓑ MATERIAL: SILICONE RUBBER CONFORMING TO CLASS 2a, GRADE 50 or 60, ZZ-R-765.

NOTES:

1. All dimensions are in inches.
2. Referenced specification shall be of the issue in effect on date of invitation for bids.

(Project 5330-0533)

THIS PART IS FOR DESIGN USE ONLY AND IS NOT TO BE STOCKED OR CATALOGED.

USER ACTIVITIES

REVIEWER ACTIVITIES

Army - 99
Navy - AS, SA
Air Force - 11
IS

This military standard is approved for use by all Departments and Agencies of the Department of Defense. Selection for all new engineering and design applications and for repetitive use shall be made from this document.

APPROVED 21 Sep 1954 REVISED Ⓐ 28 Sep 1961 Ⓑ 26 Mar 1980

P. A. EC Other Cust 85 MR	INTERNATIONAL INTEREST	TITLE GASKET; SERIES LC CONNECTORS	MILITARY STANDARD MS 91607
PROCUREMENT SPECIFICATION MIL-C-3650	SUPERSEDES:		SHEET 1 OF 1

DD FORM 672-1 COORDINATED

☆U.S. GOVERNMENT PRINTING OFFICE: 1980—603-121/1893

Source: https://assist.dla.mil -- Downloaded: 202610-23T20:43Z
Check the source to verify that this is the current version before use.