This military standard is approved by the Department of the NAVY and shall be used by that activity. All other military activities are required to employ this standard where suitable.

REVIEW ACTIVITIES:
NAVY-EC

Ⓔ CANCELLED

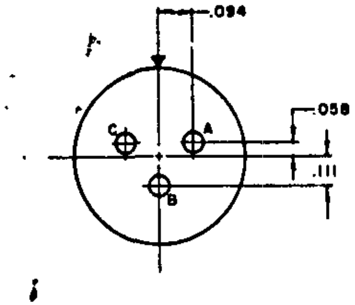

CONTACTS: 3 # 16
SERVICE RATING: II

INSERT ARR.-3

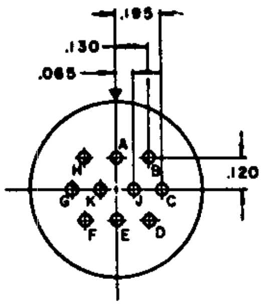

CONTACTS: 10 # 20
SERVICE RATING: I

INSERT ARR.-10

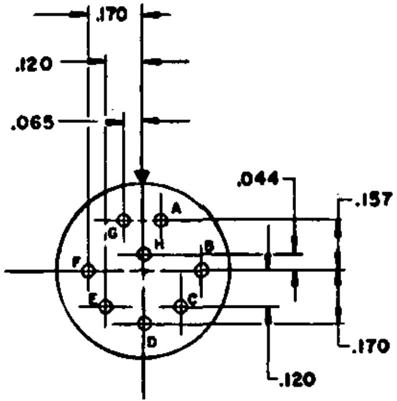

CONTACTS: 8 #20
SERVICE RATING: I

INSERT ARR.-8

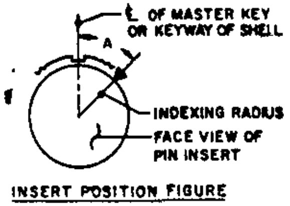

INSERT POSITION FIGURE

INSERT ARR.	INSERT POSITIONS A DEGREES				
	NORMAL	W	X	Y	Z
-3	0°	(b)	(b)	180°	(b)
-10	0°	60°	155°	270°	295°
-8	0°	90°	112°	203°	292°

(b) THESE INSERT POSITIONS ARE NOT TO BE PROVIDED.

DIMENSIONS AND MARKINGS SHOWN ARE FOR FRONT FACE OF PIN INSERT (SOCKET INSERT OPPOSITE). UNLESS OTHERWISE INDICATED, DIMENSIONS ARE SYMMETRICAL ABOUT CENTERLINE.

⌒ INDICATES "MASTER KEY OR KEYWAY OF SHELL."

↓ INDICATES TERMINUS OF "INDEXING RADIUS OF INSERT."

IN "NORMAL POSITION" THE INDEXING RADIUS COINCIDES WITH ℄ OF THE "MASTER KEY OR KEYWAY OF SHELL."

IN "ALTERNATE POSITIONS" THE PIN INSERT IS ROTATED "A" DEGREES CLOCKWISE RELATIVE TO ℄ OF THE "MASTER KEY OR KEYWAY OF SHELL" AS INDICATED.

IN "ALTERNATE POSITIONS" THE SOCKET INSERT IS ROTATED "A" DEGREES COUNTER-CLOCKWISE RELATIVE TO ℄ OF THE "MASTER KEY OR KEYWAY OF SHELL."

Ⓓ DIMENSIONING & TOLERANCING IN ACCORDANCE WITH USASI Y14.5-1966 (ANSI), DIMENSIONS IN INCHES. DIMENSIONS LOCATING CONTACTS AND INSERTS ARE TRUE POSITION. FOLLOWING TOLERANCES APPLY TO INSERT INSTALLED IN SHELL:
(A) CENTER OF EACH HOLE IN INSERT SHALL BE LOCATED AT TRUE POSITION WITHIN .010 DIA.
(B) CENTER OF ENGAGING END OF EACH CONTACT SHALL BE LOCATED AT TRUE POSITION WITHIN .012 DIA.

THIS IS A DESIGN STANDARD. NOT TO BE USED AS A PART NUMBER.

FOR DESIGN FEATURE PURPOSES THIS STANDARD TAKES PRECEDENCE OVER PROCUREMENT DOCUMENTS REFERENCED HEREIN.

REFERENCED DOCUMENTS SHALL BE OF THE ISSUE IN EFFECT ON DATE OF INVITATIONS FOR BID.

CANCELLED AFTER 25 APRIL 1978
SUPERSEDED BY MIL-STD-1669

Ⓓ APPLICABLE CONNECTORS (REF)

RECEPTACLES	
MS3110	MS3128
MS3111	MS3440
MS3112	MS3442
MS3113	MS3443
MS3114	MS3449
MS3115	MS3470
MS3119	MS3471
MS3120	MS3472
MS3121	MS3473
MS3122	MS3474
MS3124	MS3477
MS3127	MS3479

PLUGS
MS3116
MS3126
MS3475
MS3476

FED. SUP CLASS
5935

APPROVED 14 MAY 59 REVISED Ⓐ 28 FEB 61 Ⓑ 24 AUG 62 Ⓒ 25 MAR 71 Ⓓ 27 MAR 74 Ⓔ 25 APRIL 1978

P.A. Navy-AS
Other Cust

TITLE
INSERT ARRANGEMENTS, ELECTRIC
CONNECTOR; SHELL SIZE 12

PROCUREMENT SPECIFICATION
MIL-C-26482

SUPERSEDES

MILITARY STANDARD
MS 33710 (NAVY)
SHEET 1 OF 1

DD FORM 1 SEP 61 672-1 (Limited coordination)

PREVIOUS EDITIONS OF THIS FORM ARE OBSOLETE.

Project No. 5935-N857-3

☆ U.S. GOVERNMENT PRINTING OFFICE: 1978-703-122/2114

Source: https://assist.dla.mil -- Downloaded: 2026-10-23T17:07Z
Check the source to verify that this is the current version before use.