FED. SUP CLASS
1290

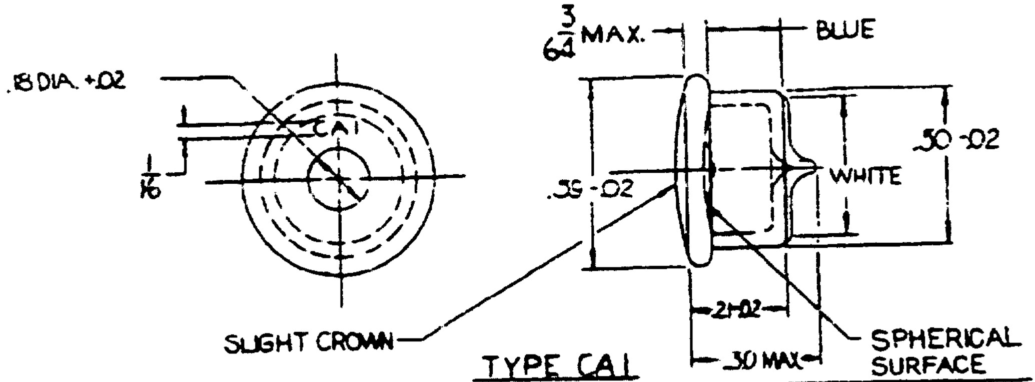
.18 DIA +.02
CA1
1/16
SLIGHT CROWN
3/64 MAX.
BLUE
.59 -.02
.50 -.02
WHITE
.21-.02
.30 MAX
SPHERICAL SURFACE

TYPE CA1

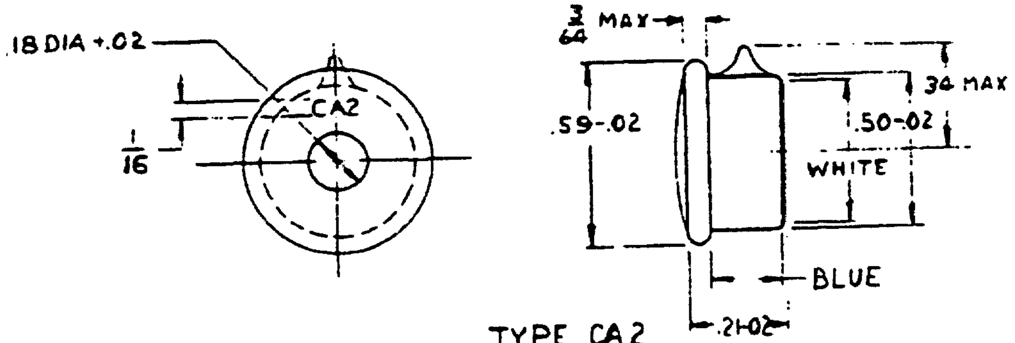
.18 DIA +.02
CA2
1/16
3/64 MAX
.59-.02
.34 MAX
.50-.02
WHITE
BLUE
.21-.02

TYPE CA2

DASH NO.	TYPE DESIGNATION	SENSITIVITY .1 OF AN INCH	
		MAX.	MIN.
-1	CA1	10'00"	60'00"
-2	CA2	5'00"	30'00"

MATERIAL: GLASS

TOLERANCE: DECIMAL ± .010, FRACTIONAL ± 1/64, UNLESS OTHERWISE SPECIFIED.

NOTES.
1. FOR DESIGN FEATURE PURPOSES, THIS STANDARD TAKES PRECEDENCE OVER PROCUREMENT DOCUMENTS REFERENCED HEREIN.
2. REFERENCED DOCUMENTS SHALL BE OF THE ISSUE IN EFFECT ON DATE OF INVITATIONS FOR BID.
3. VIAL TO BE FILLED WITH A CLEAR LIQUID WHICH WILL PROVIDE A BUBBLE HAVING A UNIFORM MOVEMENT.
4. SIDE OF CUP TO BE BLUE, UNDERSIDE OF CUP TO BE WHITE.

User activities: Army - MI, MC
Navy - MC
Air Force - None

Review activities: Army - MI
Navy - OS
Air Force - 84

APPROVED 10 June 1953 REVISED Ⓑ 20 June 1969

ENTIRE STANDARD REVISED

P.A. ARMY - MI Other Cust NAVY - OS AIR FORCE - 84	TITLE VIAL, LEVEL CYLINDRICAL, TYPE CA	MILITARY STANDARD MS 35106
PROCUREMENT SPECIFICATION MIL-V-[illegible]	SUPERSEDES	SHEET OF

This military standard is approved by the Department of Defense and is mandatory on all activities. Selection for all new engineering and design applications and for repetitive use shall be made from this document.

DD FORM 1 SEP 62 672-1 (Coordinated)

EDITION OF 1 SEP 59 MAY BE USED.

Source: https://assist.dla.mil -- Downloaded: 2026-10-23T17:10Z
Check the source to verify that this is the current version before use.