FED. SUP CLASS
5930

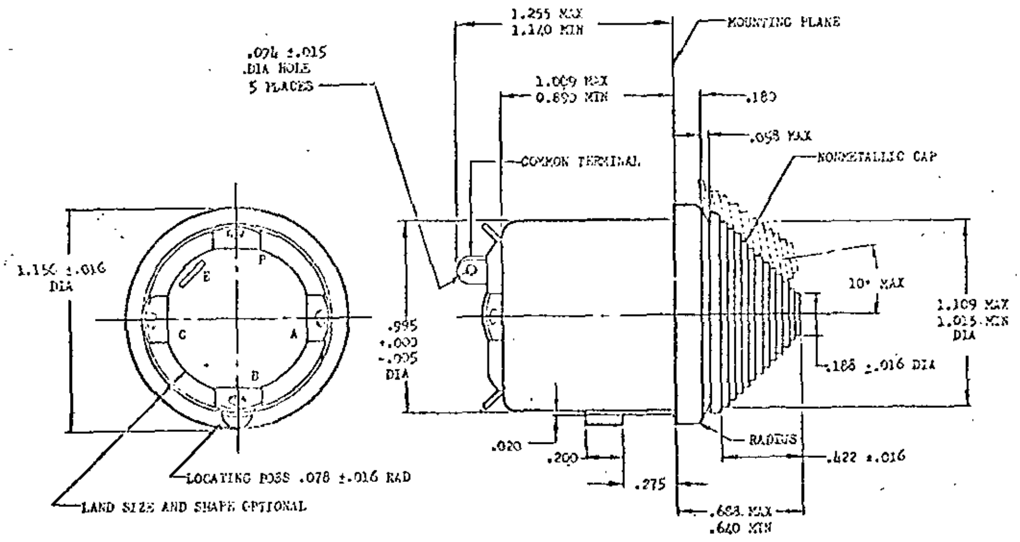
1.255 MAX
1.140 MIN
MOUNTING PLANE
.074 ±.015
DIA HOLE
5 PLACES
1.009 MAX
0.890 MIN
.180
.058 MAX
COMMON TERMINAL
NONMETALLIC CAP
1.150 ±.016
DIA
E
P
C
A
B
.995
+.000
-.005
DIA
10° MAX
1.109 MAX
1.015 MIN
DIA
.188 ±.016 DIA
.020
.200
.275
RADIUS
.422 ±.016
.688 MAX
.640 MIN
LOCATING BOSS .078 ±.016 RAD
LAND SIZE AND SHAPE OPTIONAL

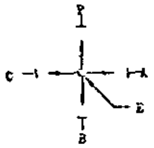

CIRCUIT DIAGRAM

ARROWS INDICATE CONTACTS MADE IN THE DIRECTION OF LEVER TRAVEL AS VIEWED FROM TERMINAL END.

| DASH NO. |
|---|
| -1 |

DIMENSIONS IN INCHES. UNLESS OTHERWISE SPECIFIED, TOLERANCES: DECIMALS ±.010.
MATERIAL - SHELL OR COVER, SUITABLE INSULATING MATERIAL.

SOLDER LUG ANGLE AND LENGTH OPTIONAL BUT MUST NOT EXTEND BEYOND EDGE OF BODY OR BEYOND THE COMMON TERMINAL.
LOCATION OF THE COMMON TERMINAL MAY BE IN CENTER OF SWITCH.
ALL ACTION QUICK-MAKE, QUICK-BREAK, DEFINITE SNAP FEEL.
TERMINAL IDENTIFICATION LETTERS SHALL BE EITHER MOLDED OR ENGRAVED IN THE BASE ADJACENT TO THE DESIGNATED TERMINAL.
EACH LETTER SHALL BE PERMANENT, LEGIBLE, AND CLEARLY VISIBLE.

CANCELLED
USE MS27708 (ASG)

FOR DESIGN FEATURE PURPOSES, THIS STANDARD TAKES PRECEDENCE OVER PROCUREMENT DOCUMENTS REFERENCED HEREIN.
REFERENCED DOCUMENTS SHALL BE OF THE ISSUE IN EFFECT ON DATE OF INVITATIONS FOR BID.

This standard has been approved by the BuWep (Department of the Navy) and the Department of the USAF and is mandatory for use by that activity. All other military activities are required to employ the standard where suitable.

APPROVED 30 Sept 63 REVISED 27 Sept 68

| | | |
|---|---|---|
| P.A. USAF - ASD<br>Other Cust<br>Navy - Wep | TITLE<br>SWITCH, TOGGLE, MOMENTARY, FOUR POSITION ON, CENTER OFF | MILITARY STANDARD<br>MS28939(ASG) |
| PROCUREMENT SPECIFICATION<br>MIL-S-9419 | SUPERSEDES: | SHEET 1 OF 1 |

DD FORM 1 SEP 61 672-1 (Limited coordination)

PREVIOUS EDITIONS OF THIS FORM ARE OBSOLETE

☆ U. S. GOVERNMENT PRINTING OFFICE: 1968-341-512/A-1713

Source: https://assist.dla.mil -- Downloaded: 2026-10-23T17:01Z
Check the source to verify that this is the current version before use.