DISTRIBUTION STATEMENT A: Approved for public release; distribution is unlimited.

AN104201
THRU
AN104300

FED. SUP. CLASS.
5306

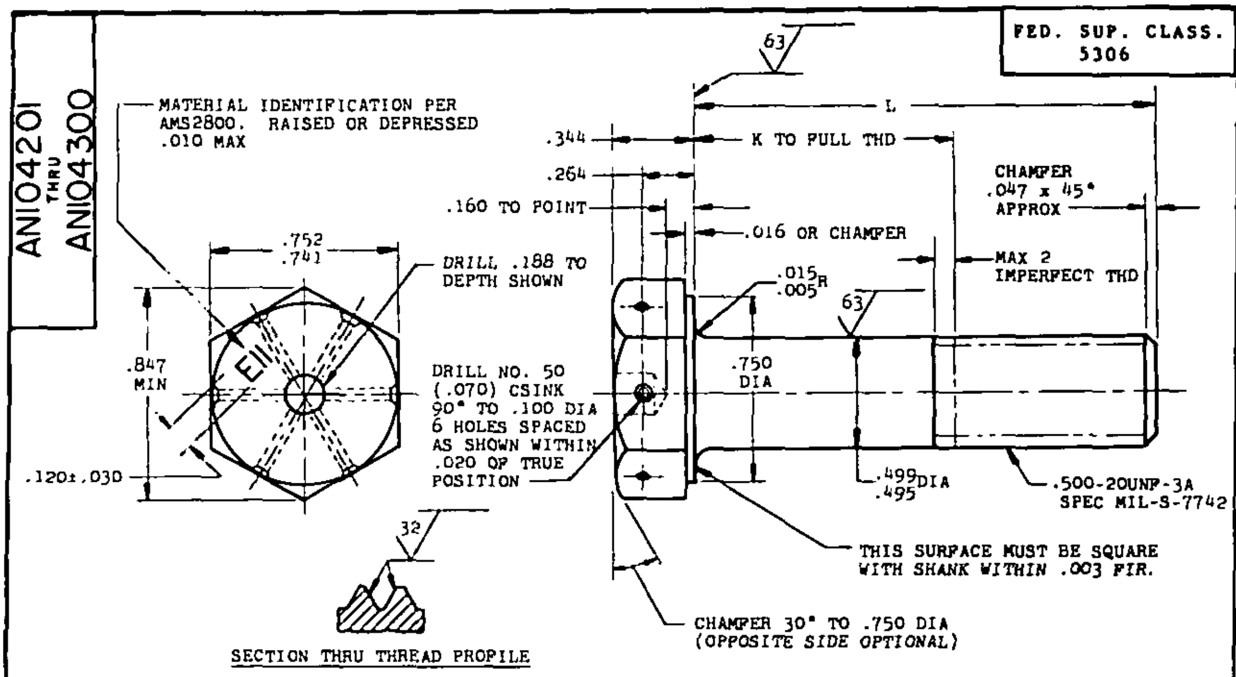
MATERIAL IDENTIFICATION PER AMS2800. RAISED OR DEPRESSED .010 MAX
.752
.741
DRILL .188 TO DEPTH SHOWN
.847 MIN
E11
DRILL NO. 50 (.070) CSINK 90° TO .100 DIA 6 HOLES SPACED AS SHOWN WITHIN .020 OF TRUE POSITION
.120±.030
32
SECTION THRU THREAD PROFILE
63
L
.344
K TO FULL THD
.264
.160 TO POINT
.016 OR CHAMFER
CHAMFER .047 x 45° APPROX
MAX 2 IMPERFECT THD
.015
.005 R
63
.750 DIA
.499
.495 DIA
.500-20UNF-3A SPEC MIL-S-7742
THIS SURFACE MUST BE SQUARE WITH SHANK WITHIN .003 FIR.
CHAMFER 30° TO .750 DIA (OPPOSITE SIDE OPTIONAL)

L	K +.000 -.060	PART NO.	L	K +.000 -.060	PART NO.	L	K +.000 -.060	PART NO.	L	K +.000 -.060	PART NO.
			1.812	.562	AN104219	3.125	1.875	AN104233	4.875	3.625	AN104247
1.000	(a)	AN104206	1.875	.625	AN104220	3.250	2.000	AN104234	5.000	3.750	AN104248
1.062	(a)	AN104207	1.938	.688	AN104221	3.375	2.125	AN104235	5.125	3.875	AN104249
1.125	(a)	AN104208	2.000	.750	AN104222	3.500	2.250	AN104236	5.250	4.000	AN104250
1.188	(a)	AN104209	2.062	.812	AN104223	3.625	2.375	AN104237	5.375	4.125	AN104251
1.250	(a)	AN104210	2.125	.875	AN104224	3.750	2.500	AN104238	5.500	4.250	AN104252
1.312	(a)	AN104211	2.188	.938	AN104225	3.875	2.625	AN104239	5.625	4.375	AN104253
1.375	(a)	AN104212	2.250	1.000	AN104226	4.000	2.750	AN104240	5.750	4.500	AN104254
1.438	.188	AN104213	2.375	1.125	AN104227	4.125	2.875	AN104241	5.875	4.625	AN104255
1.500	.250	AN104214	2.500	1.250	AN104228	4.250	3.000	AN104242	6.000	4.750	AN104256
1.562	.312	AN104215	2.625	1.375	AN104229	4.375	3.125	AN104243			
1.625	.375	AN104216	2.750	1.500	AN104230	4.500	3.250	AN104244			
1.688	.438	AN104217	2.875	1.625	AN104231	4.625	3.375	AN104245			
1.750	.500	AN104218	3.000	1.750	AN104232	4.750	3.500	AN104246			

(a) THREAD TO HEAD. MAXIMUM TWO IMPERFECT THREADS.

NOTE:
(1) SHANK SHALL BE STRAIGHT WITHIN .002 FIR. PER INCH OF BOLT LENGTH.
(2) THE CONCENTRICITY OF THREAD PD IN RELATION TO THE SHANK SHALL BE WITHIN .006 FIR.
(3) THE CONCENTRICITY OF THE SHANK IN RELATION TO THE WASHER FACE DIAMETER AND HEXAGON SHALL BE WITHIN .023 FIR.

MATERIAL: STEEL AMS6322

HARDNESS: ROCKWELL C26-32

FINISH: CADMIUM PLATE AMS2400

SURFACE ROUGHNESS: AS107

MANUFACTURING SPECIFICATION: AMS7452

③ INSPECTION: ALL PARTS SHALL UNDERGO MAGNETIC INSPECTION IN ACCORDANCE WITH AMS2640

BREAK SHARP EDGES .003-.015 UNLESS OTHERWISE SPECIFIED.

DIMENSIONS IN INCHES. UNLESS OTHERWISE SPECIFIED: TOLERANCES; LINEAR DIMENSIONS ±.010, ANGULAR DIMENSIONS ±2°.

DO NOT USE UNASSIGNED PART NUMBERS.

INACTIVE FOR NEW DESIGN AFTER 3 MARCH 1969 NO SUPERSEDING STANDARD.

THIS STANDARD WAS DEVELOPED COOPERATIVELY BY THE ENGINE AND PROPELLER UTILITY PARTS COMMITTEE OF THE SAE.

APPROVED 6 June 49 REVISED ① 32 Aug 54 ② 3 Mar 69 ③ 30 June 86

P.A. AF-11
CUST. NAVY-AS
ARMY-AV

AIR FORCE-NAVY AERONAUTICAL STANDARD

BOLT - DRILLED HEX HEAD, 6 HOLES, .500-20

AN104201
THRU
AN104300

Project No. 5306-1026

Source: https://assist.dla.mil -- Downloaded: 2026-10-26T14:24Z
Check the source to verify that this is the current version before use.