CANCELLED AFTER 16 JULY 1980. NO SUPERCEEDING STANDARD

Review activities: 11,14,19,69,85 AND NAS

FED. SUP CLASS
4730

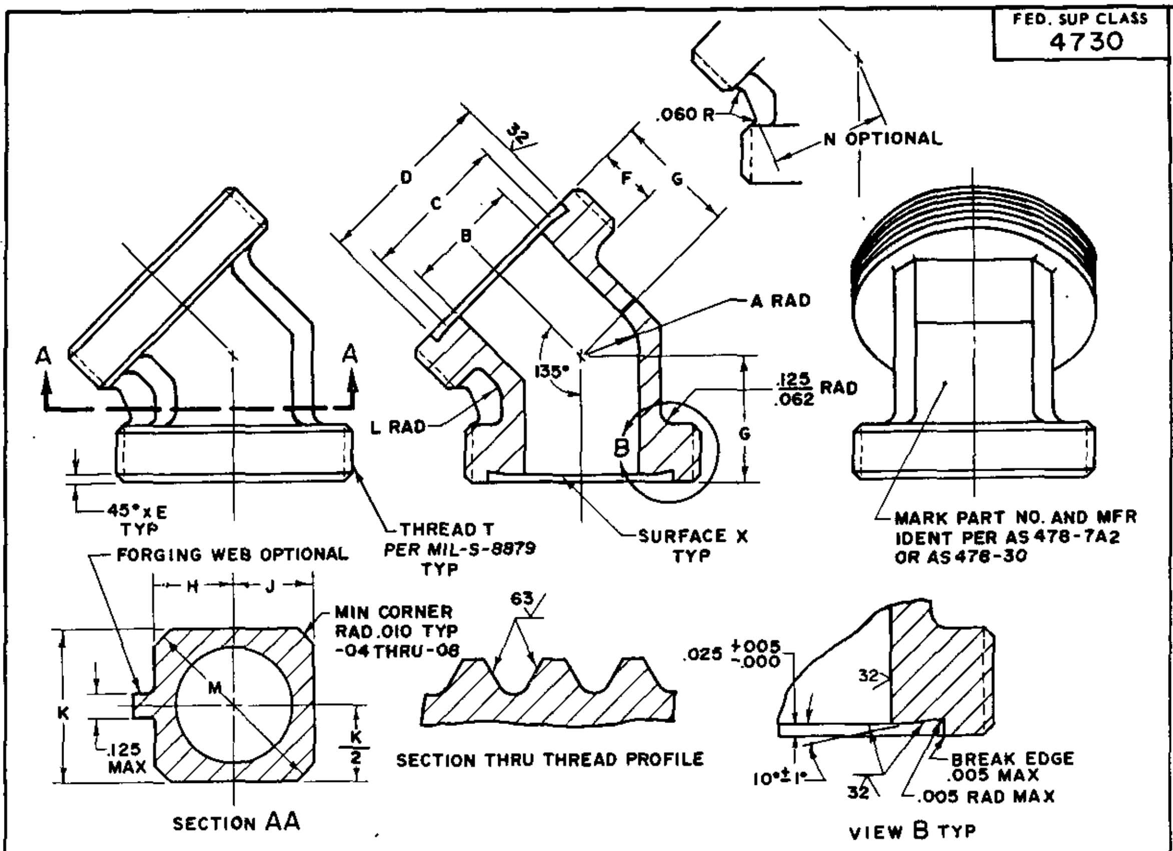
.060 R
N OPTIONAL
D
C
B
32
F
G
A RAD
135°
.125/.062 RAD
G
B
A
A
L RAD
45° x E TYP
THREAD T PER MIL-S-8879 TYP
SURFACE X TYP
MARK PART NO. AND MFR IDENT PER AS 478-7A2 OR AS 478-30
FORGING WEB OPTIONAL
H
J
MIN CORNER RAD .010 TYP -04 THRU -08
K
M
.125 MAX
K/2
63
.025 +.005 -.000
32
10° ± 1°
32
BREAK EDGE .005 MAX
.005 RAD MAX

SECTION AA

SECTION THRU THREAD PROFILE

VIEW B TYP

MS PART NO.	TUBE O.D.	THREAD T UNJEF-3A	A RAD	B DIA ±.003	C DIA +.000 -.010	D DIA +.002 -.000	E	F +.031 -.000	G +.010 -.000	H +.015 -.000	J +.015 -.000	K +.002 -.006	L	M DIA	N OPT +.000 -.015	APPROX WEIGHT LB/EA
MS27861-04	1/4	11/16-24	.102	.204	.282	.470	.030	.208	.412	.154	.164	.437	.093	—	.280	
MS27861-06	3/8	13/16-20	.158	.317	.420	.608	.035	.250	.488	.220	.220	.562	.093	—	.344	
MS27861-08	1/2	15/16-20	.214	.428	.536	.724	035	.250	.518	.288	.288	.687	.102	.860	.422	
MS27861-12	3/4	1-3/16-18	.339	.678	.808	.986	.040	.278	.608	.410	.410	.875	.102	1.062	.562	
MS27861-16	1	1-1/2-18	.450	.900	1.090	1.282	.040	.278	.683	.548	.548	1.125	.109	1.375	.750	

1. THREAD PD SHALL BE SQUARE TO SURFACE X WITHIN .005 FIR AND CONCENTRIC WITH DIA D WITHIN .005 FIR.
2. MATERIAL: ALUMINUM ALLOY, AMS 4127.
3. CLEANING: FINISHED PARTS SHALL BE CLEANED PER MIL-[illegible]17.
4. SURFACE TEXTURE: IN ACCORDANCE WITH USAS B46.1, UNLESS OTHERWISE SPECIFIED ALL MACHINED SURFACES TO BE 125 MICROINCHES.
5. BREAK EDGES .003-.015 UNLESS OTHERWISE SPECIFIED.
6. DIMENSIONS IN INCHES. UNLESS OTHERWISE SPECIFIED, TOLERANCES: *DECIMALS* ±.010, ANGLES ±5°.
7. DO NOT USE UNASSIGNED PART NUMBERS.
8. REFER TO MS27856 FOR ASSEMBLY.

FOR DESIGN FEATURE PURPOSES, THIS STANDARD TAKES PRECEDENCE OVER PROCUREMENT DOCUMENTS REFERENCED HEREIN.

REFERENCED DOCUMENTS SHALL BE *OF THE ISSUE IN EFFECT ON DATE OF* INVITATIONS FOR BID.

APPROVED 14 JULY 1967 REVISED Ⓐ 16 July 1980

This standard has been approved by the Department of the AIR FORCE and is mandatory for use by that activity. All other military activities are required to employ this standard where suitable.

P.A. USAF 12 Other Cust	TITLE *ELBOW 45°, ALUMINUM, FLUID CONNECTION* FITTING, LOW PRESSURE	MILITARY STANDARD MS27861 (USAF)
PROCUREMENT SPECIFICATION MIL-F-27417	SUPERSEDES:	SHEET 1 OF 1

Source: https://assist.dla.mil -- Downloaded: 2026-10-23T16:53Z
Check the source to verify that this is the current version before use.