FED. SUP CLASS.
1560

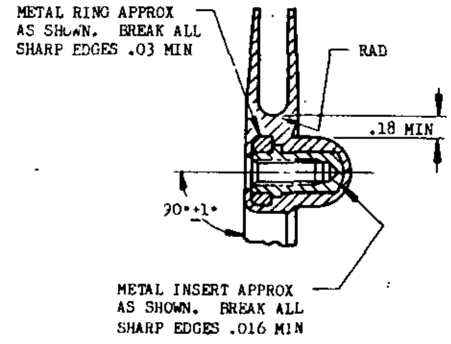
METAL RING APPROX AS SHOWN. BREAK ALL SHARP EDGES .03 MIN
RAD
.18 MIN
90°±1°
METAL INSERT APPROX AS SHOWN. BREAK ALL SHARP EDGES .016 MIN

THREADED INSERT TYPE FLUSH FLANGE
SELF-SEALING TANK

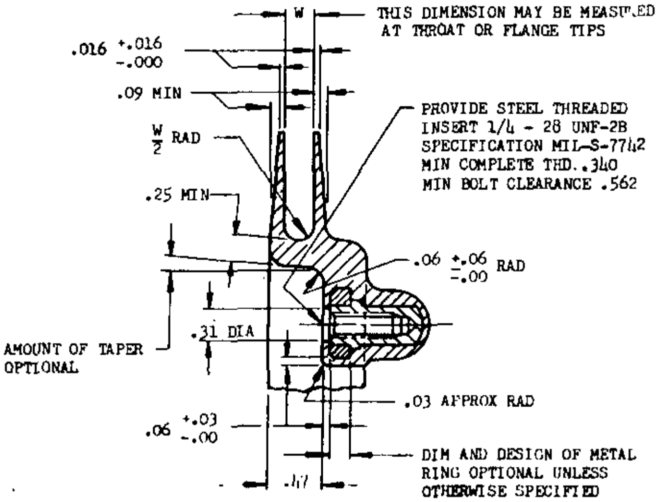
W
THIS DIMENSION MAY BE MEASURED AT THROAT OR FLANGE TIPS
.016 +.016 -.000
.09 MIN
W/2 RAD
.25 MIN
PROVIDE STEEL THREADED INSERT 1/4 - 28 UNF-2B SPECIFICATION MIL-S-7742 MIN COMPLETE THD. .340 MIN BOLT CLEARANCE .562
.06 +.06 -.00 RAD
.31 DIA
AMOUNT OF TAPER OPTIONAL
.03 APPROX RAD
.06 +.03 -.00
DIM AND DESIGN OF METAL RING OPTIONAL UNLESS OTHERWISE SPECIFIED
.47

THREADED INSERT TYPE RECESSED FLANGE
SELF-SEALING TANK

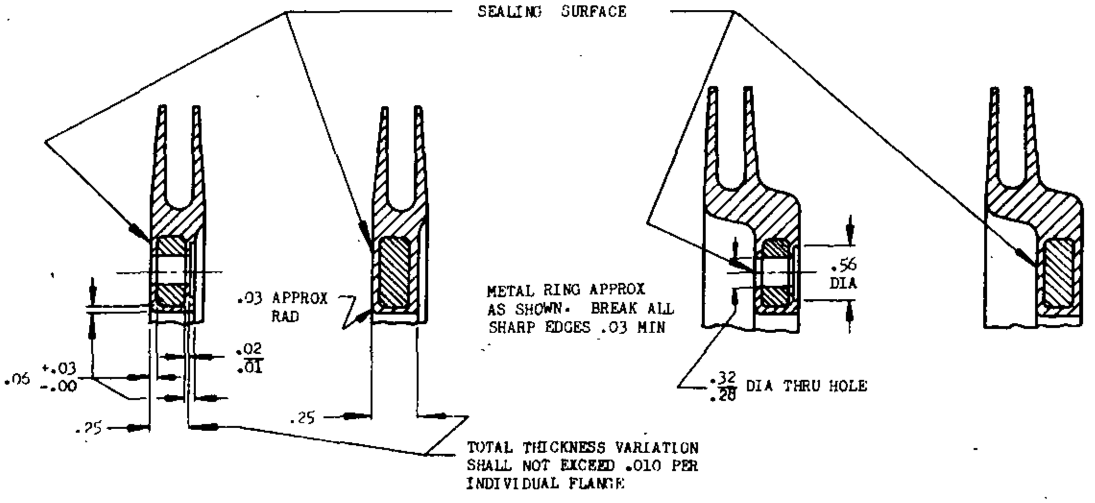
SEALING SURFACE
.03 APPROX RAD
.02 .01
.06 +.03 -.00
.25
.25
TOTAL THICKNESS VARIATION SHALL NOT EXCEED .010 PER INDIVIDUAL FLANGE
METAL RING APPROX AS SHOWN. BREAK ALL SHARP EDGES .03 MIN
.56 DIA
.32 .28 DIA THRU HOLE

THRU HOLE TYPE COMPRESSION TYPE

FLUSH FLANGE
SELF-SEALING TANK

THRU HOLE TYPE COMPRESSION TYPE

RECESSED FLANGE
SELF-SEALING TANK

DIMENSIONS IN INCHES. UNLESS OTHERWISE SPECIFIED, TOLERANCES: TWO PLACE DECIMALS ±.03, THREE PLACE DECIMALS ±.010, ANGLES ±1/2°

DIMENSIONS AND NOTES SHOWN FOR ONE FLANGE SHALL BE USED FOR OTHER FLANGES AS APPLICABLE.

MOLDED MATERIAL OVER METAL SHALL BE .06 MIN THICKNESS UNLESS OTHERWISE SPECIFIED.

USE RADIUS ON ALL CONTOUR CHANGES OF MOLDED RUBBER PORTIONS OF FLANGES.

Ⓒ CANCELLED after 7 AUG 1990
NO SUPERSEDING STANDARD

THIS IS A DESIGN STANDARD. NOT TO BE USED AS A PART NUMBER.

APPROVED 24 Feb 58
REVISED Ⓐ 27 May 59 Ⓑ 30 AUG 74 Ⓒ 7 AUG 1990

P.A. USAF **Other Cust** Army - TC Navy - Aer	**TITLE** FLANGE, ATTACHMENT, MOLDED TANK, FULL MOLDED, GENERAL FEATURES OF CONSTRUCTION	**MILITARY STANDARD** **MS33596**
PROCUREMENT SPECIFICATION MIL-F-5577	**SUPERSEDES:** AND10222, IN PART (FLANGE)	**SHEET** 1 **OF** 1

DD FORM 1 SEP 57 672-1 *(Coordinated)*

PREVIOUS EDITIONS OF THIS FORM ARE OBSOLETE.

NOTICE.—When Government drawings, specifications, or other data are used for any purpose other than in connection with a definitely related Government procurement operation, the United States Government thereby incurs no responsibility, nor any obligation whatsoever; and the fact that the Government may have formulated, furnished, or in any way supplied the said drawings, specifications, or other data is not to be regarded by implication or otherwise as in any manner licensing the holder or any other person or corporation, or conveying any rights or permission to manufacture, use, or sell any patented invention that may in any way be related thereto.

This military standard is approved by the Department of Defense and is mandatory on all activities. Selection for all new engineering and design applications and for repetitive use shall be made from this document.

☆U.S. GOVERNMENT PRINTING OFFICE: 1960-702-023/198

Source: https://assist.dla.mil -- Downloaded: 2026-10-23T17:05Z
Check the source to verify that this is the current version before use.