NOTICE: When Government drawings, specifications, or other data are used for any purpose other than in connection with a definitely related Government procurement operation, the United States Government thereby incurs no responsibility, nor any obligation whatsoever; and the fact that the Government may have formulated, furnished, or in any way supplied the said drawings, specifications, or other data is not to be regarded by implication or otherwise as in any manner licensing the holder or any other person or corporation, or conveying any rights or permission to manufacture, use, or sell any patented invention that may in any way be related thereto.

NOTE: This drawing was approved by joint action of the War and Navy Departments as the Army-Navy standard for this product. This drawing supersedes all antecedent standard drawings for the same product and shall become effective for the procurement of aeronautical supplies, or for use in new design, not later than six months after the latest date of approval shown. It may be put into effect, however, at an earlier date after promulgation.

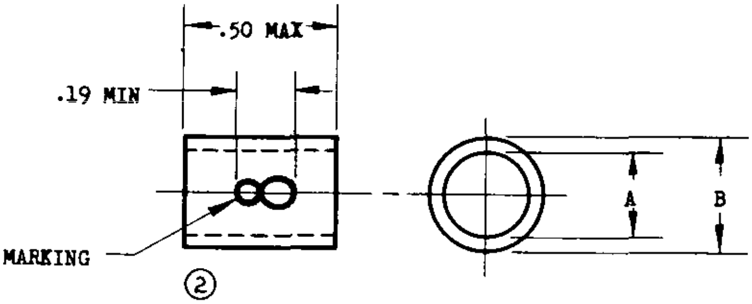

AN4028-5-8 OR AN4028-7-8 SHOWN

AN PART NO.		MARKING	AN PART NO.		MARKING
5MM CABLE	7MM CABLE		5MM CABLE	7MM CABLE	
AN4028-5-1	AN4028-7-1	1	AN4028-5-10	AN4028-7-10	10
AN4028-5-2	AN4028-7-2	2	AN4028-5-11	AN4028-7-11	11
AN4028-5-3	AN4028-7-3	3	AN4028-5-12	AN4028-7-12	12
AN4028-5-4	AN4028-7-4	4	AN4028-5-13	AN4028-7-13	13
AN4028-5-5	AN4028-7-5	5	AN4028-5-14	AN4028-7-14	14
AN4028-5-6	AN4028-7-6	6	AN4028-5-15	AN4028-7-15	15
AN4028-5-7	AN4028-7-7	7	AN4028-5-16	AN4028-7-16	16
AN4028-5-8	AN4028-7-8	8	AN4028-5-17	AN4028-7-17	17
AN4028-5-9	AN4028-7-9	9	AN4028-5-18	AN4028-7-18	18

CABLE SIZE	A DIA +.010 -.000	B DIA MAX
5MM	.209	.30
7MM	.290	.38

② MATERIAL SHALL BE NON-METALLIC.

FINISH: SMOOTH, FLEXIBLE, INSULATED MATERIAL ON BOTH INNER AND OUTER SURFACES, NON-STICKY AT TEMPERATURES UP TO 40°C. (104°F.).

THE FINISHED MARKER SHALL NOT DETERIORATE WHEN BAKED AT A TEMPERATURE OF 127°C.(260°F.) FOR 24 HOURS, FOLLOWED BY FLATTENING THE MARKER INTO AN OVAL SHAPE HAVING A MINOR AXIS NOT OVER FIVE TIMES THE WALL THICKNESS. WHEN IN PLACE ON A SAMPLE LENGTH OF HIGH TENSION IGNITION CABLE, SPECIFICATION AN-C-130, MARKERS SHALL BE CAPABLE OF WITHSTANDING IMMERSION IN SALT WATER, GASOLINE, KEROSENE, AND OIL, RESPECTIVELY, FOR 24 HOUR PERIODS AT ROOM TEMPERATURE. SUCH IMMERSION SHALL CAUSE NO CRACKING, SWELLING, TACKINESS, SEPARATION OF FINISH, OR DESTRUCTION OF NUMERALS.

NUMERALS SHALL BE DISTINCT AND LEGIBLE.

DIMENSIONS IN INCHES.

APPROVED 12 Dec 42 REVISED ① 20 Apr 45 ② 20 Nov 45

PROCUREMENT SPECIFICATION	ARMY-NAVY AERONAUTICAL STANDARD	
NONE	MARKER - IGNITION CABLE	AN4028

② SUPERSEDES U.S. ARMY SPEC 28123, TENTATIVE A-N SPEC AN-9513, A-N STANDARD ISSUE OF AN4028, AND THE 9/32 IN. DIA MARKERS OF NAF 213294.

Source: https://assist.dla.mil -- Downloaded: 2026-10-26T14:20Z
Check the source to verify that this is the current version before use.