FED SUP CLASS
6610

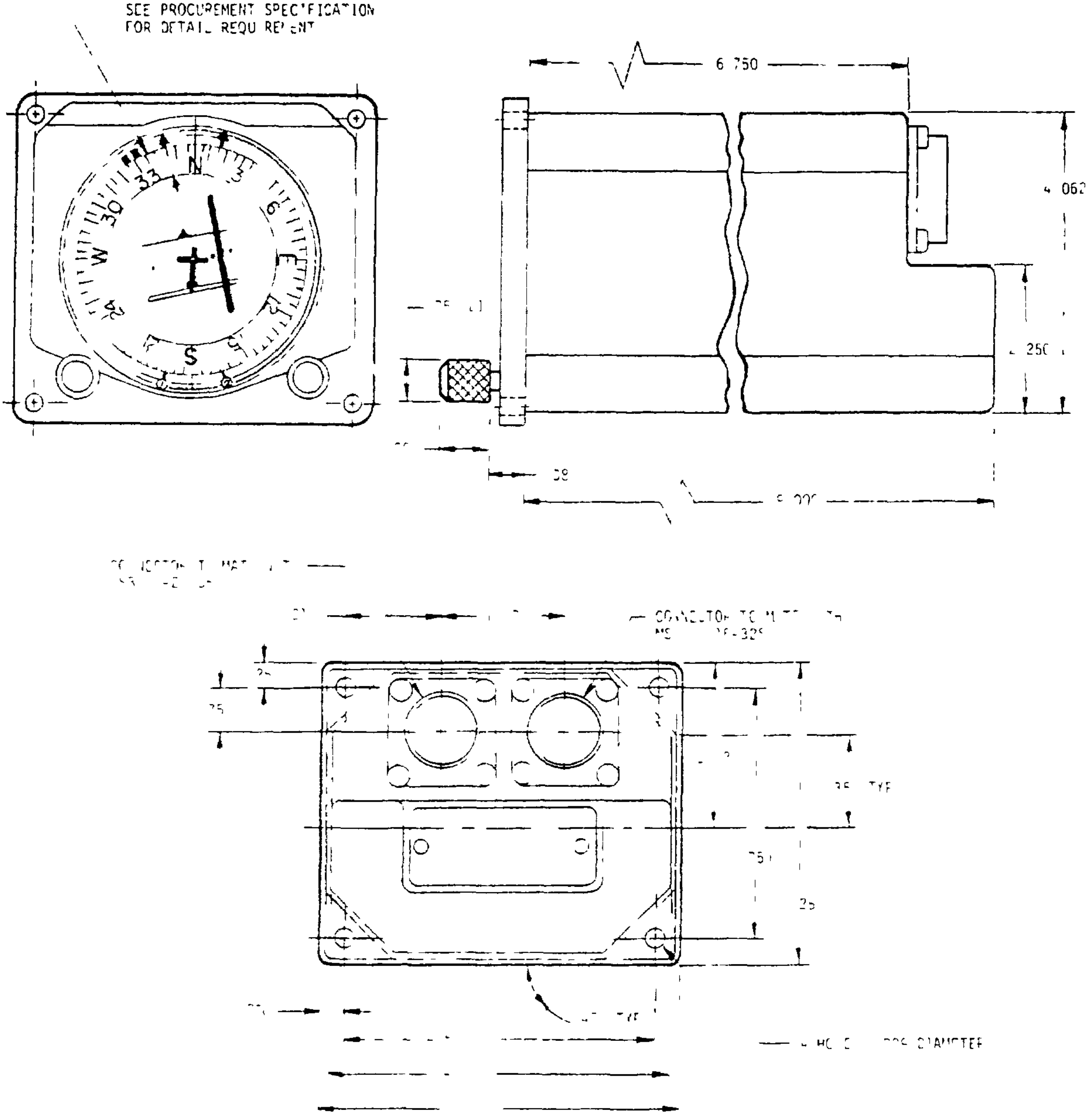
SHOWN FOR REFERENCE ONLY
SEE PROCUREMENT SPECIFICATION
FOR DETAIL REQUIREMENT
6.750
4.062
4.250
.38
5.000
CONNECTOR TO MATE WITH
MS 3...
CONNECTOR TO MATE WITH
MS ...-32S
.25
.75
TYP
4 HOLES ... DIAMETER

REAR VIEW

MS PART NUMBER
M 17869

* CERTAIN PROVISIONS OF THIS STANDARD ARE THE SUBJECT OF INTERNATIONAL STANDARDIZATION AGREEMENT STANAG NO [illegible] AND AIR STD [illegible]. WHEN REVISION OR CANCELLATION OF THIS STANDARD IS PROPOSED, THE DEPARTMENTAL CUSTODIAN WILL INFORM THEIR RESPECTIVE DEPARTMENTAL STANDARDIZATION OFFICES SO THAT APPROPRIATE ACTION MAY BE TAKEN RESPECTING THE INTERNATIONAL AGREEMENT CONCERNED

DIMENSIONS IN INCHES. UNLESS OTHERWISE SPECIFIED, TOLERANCES: DECIMALS [illegible] .00 ANGLES [illegible]

THIS STANDARD TAKES PRECEDENCE OVER DOCUMENTS REFERENCED HEREIN.
REFERENCED DOCUMENTS SHALL BE OF THE ISSUE IN EFFECT ON DATE OF INVITATIONS FOR BID

Ⓐ REVISED AND REDRAWN

This military standard is approved by NAVAL AIR SYSTEMS COMMAND, Department of the Navy and shall be used by that activity. All other military activities are required to employ this standard where suitable.

APPROVED 1 DEC 19[illegible] REVISED Ⓐ 8 JUNE 1984

P A **NAVY — AS** **Other Cust**	INTERNATIONAL INTEREST *	**TITLE** INDICATOR, HORIZONTAL SITUATION, ID-1013 A	**MILITARY STANDARD** **MS17869(AS)**
PROCUREMENT SPECIFICATION MIL-I-23366		**SUPERSEDES**	**SHEET** 1 **OF** 1

DD FORM 1 MAR 72 **672-1** (Limited Coordination) PREVIOUS EDITIONS OF THIS FORM ARE OBSOLETE. PLATE NO [illegible]

PROJECT NO 6610-N085

Source: https://assist.dla.mil -- Downloaded: 2026-10-23T14:10Z
Check the source to verify that this is the current version before use.