FSC 1670

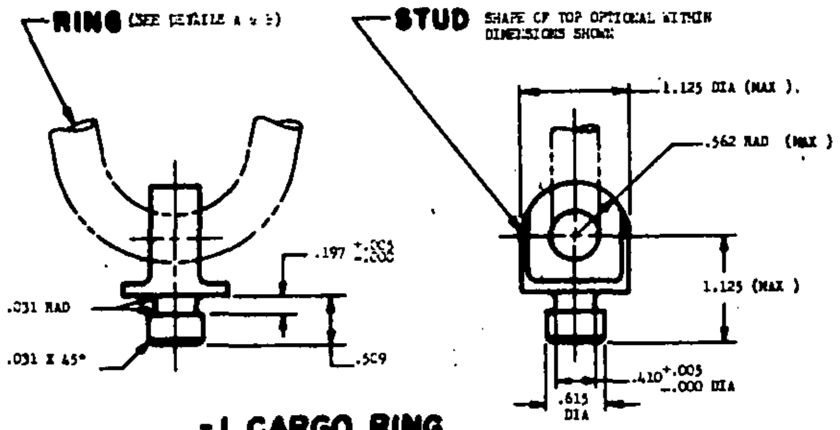
RING (SEE DETAILS A & B)
STUD SHAPE OF TOP OPTIONAL WITHIN DIMENSIONS SHOWN
1.125 DIA (MAX)
.562 RAD (MAX)
1.125 (MAX)
.197 +.003 -.000
.031 RAD
.031 X 45°
.509
.410 +.005 -.000 DIA
.615 DIA

-1 CARGO RING

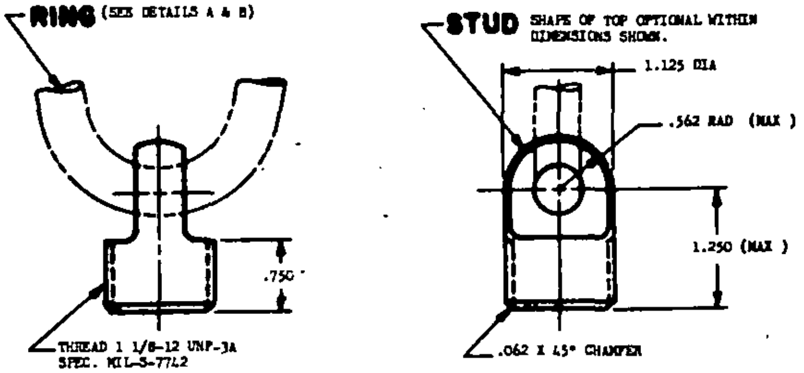
RING (SEE DETAILS A & B)
STUD SHAPE OF TOP OPTIONAL WITHIN DIMENSIONS SHOWN.
1.125 DIA
.562 RAD (MAX)
1.250 (MAX)
.750
THREAD 1 1/8-12 UNF-3A SPEC. MIL-S-7742
.062 X 45° CHAMFER

-2 CARGO RING

MATERIAL: SEE PROCUREMENT SPECIFICATION.

HEAT TREAT: SEE PROCUREMENT SPECIFICATION.

REMOVE ALL BURRS AND SHARP EDGES.

DIMENSIONS IN INCHES. UNLESS OTHERWISE SPECIFIED, TOLERANCES: FRACTIONS ±1/64, DECIMALS, ±.005, ANGLES ±1/2°.

FOR DESIGN FEATURE PURPOSES, THIS STANDARD TAKES PRECEDENCE OVER PROCUREMENT DOCUMENTS REFERENCED HEREIN.

REFERENCED DOCUMENTS SHALL BE OF THE ISSUE IN EFFECT ON DATE OF INVITATIONS FOR BID.

APPROVED 1 DEC 67 REVISED

This military standard has been approved by the Department of Defense and is mandatory for use by all Departments and Agencies of the Department of Defense. Selection for all new engineering and design applications and for repetitive use shall be made from this document.

[illegible]

User activities:

P.A. NAVY - AS Other Cust ARMY - GL USAF - 11	TITLE RING, CARGO TIEDOWN (10,... LB), TYPE III	MILITARY STANDARD MS21236
PROCUREMENT SPECIFICATION MIL-A-8905	SUPERSEDES	SHEET OF 2

DD FORM 672-1 (Coordinated)

PREVIOUS EDITIONS OF THIS FORM ARE OBSOLETE.

FED. SUP. CLASS
1670

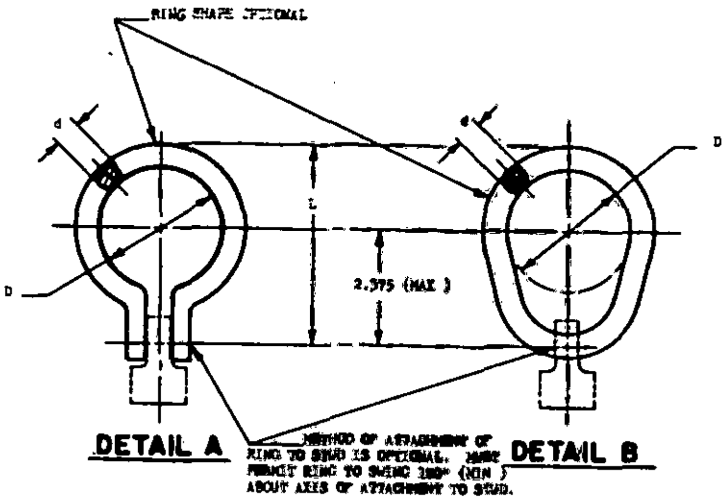
RING SHAPE OPTIONAL
d
D
L
2.375 (MAX)
d
D
DETAIL A
DETAIL B
METHOD OF ATTACHMENT OF RING TO STUD IS OPTIONAL. MUST PERMIT RING TO SWING 180° (MIN) ABOUT AXIS OF ATTACHMENT TO STUD.

CARGO RING DIMENSIONS (INCHES)

D (MIN)	d (MAX)	L (MAX)
2.500	.500	3.750

APPROVED 1 DEC 67 REVISED

This military standard has been approved by the Department of Defense and is mandatory for use by all Departments and Agencies of the Department of Defense. Selection for all new engineering and design applications and for repetitive use shall be made from this document.

Review activities:
USAF-11,82
ARMY-GL,AV
NAVY-AS

User activities:

P.A. NAVY - AS Other Cust ARMY - GL USAF - 11	TITLE RING, CARGO TIEDOWN (10,[illegible] LB), TYPE III	MILITARY STANDARD MS21236
PROCUREMENT SPECIFICATION MIL-A-8905	SUPERSEDES:	SHEET 2 OF 2

DD FORM 1 SEP 67 672-1 (Coordinated)

PREVIOUS EDITIONS OF THIS FORM ARE OBSOLETE.

Source: https://assist.dla.mil -- Downloaded: 2026-10-23T14:28Z
Check the source to verify that this is the current version before use.