FED. SUP CLASS
9540

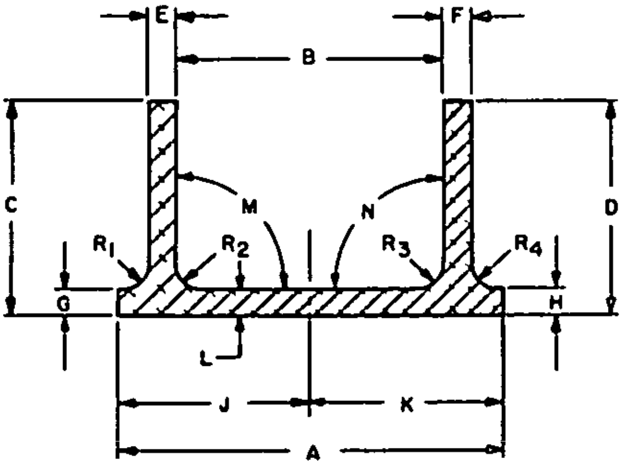

TABLE I. DASH NUMBER.

DASH NO	A	B	C	D	E	F	G	H	J	K	L	M	N	R1	R2	R3	R4	TEMPER
001	2.020	.335	1.330	1.300	.060	.060	.060	.060	1.010	1.010	.060	90°	90°	.125	.125	.125	.125	T3511
003	2.120	.335	1.450	1.450	.160	.160	.150	.150	1.060	1.060	.150	90°	90°	.060	.060	.060	.060	[illegible]

REQUIREMENTS:

1. MATERIAL. ALUMINUM ALLOY 2024, (UNS A92024), AS SPECIFIED IN QQ-A-200/3.
2. FORMING PROCESS. EXTRUDED (CODE E).
3. PART NUMBER. THE PART NUMBER CONSISTS OF THE BASIC MS NUMBER, PLUS A FORMING PROCESS CODE, PLUS A DASH NUMBER FROM TABLE I.

   EXAMPLE: MS14363E001

   DASH NUMBER FROM TABLE I

   EXTRUDED (SEE REQUIREMENT 2)

   BASIC MS NUMBER
4. MARKING. ALUMINUM AND ALUMINUM ALLOYS SHALL BE MARKED WITH THE PRODUCER'S NAME OR REGISTERED TRADE MARK, THE PART NUMBER (MILITARY STANDARD (MS) NUMBER PLUS THE APPLICABLE DASH NUMBER), AND THE LOT NUMBER AND THIS MARKING SHALL BE APPLIED IN ACCORDANCE WITH FED-STD-184.

NOTES:

1. ALL DIMENSIONS ARE IN INCHES.
2. STANDARD LENGTH OF CHANNEL IS 10 FEET MINIMUM, 12 FEET MAXIMUM.
3. REFERENCED DOCUMENTS SHALL BE OF THE ISSUE IN EFFECT ON DATE OF INVITATION FOR BIDS, OR REQUEST FOR PROPOSAL, EXCEPT THE REFERENCED ADOPTED INDUSTRY DOCUMENTS SHALL GIVE THE DATE OF THE ISSUE ADOPTED.
4. FOR DESIGN FEATURE PURPOSES THIS STANDARD TAKES PRECEDENCE OVER PROCUREMENT DOCUMENTS REFERENCED HEREIN.

USER ACTIVITIES:
NAVY - MC,OS,SH

REVIEWER ACTIVITIES:
AIR FORCE - 84
DLA - IS

This military standard is approved for use by all Departments and Agencies of the Department of Defense. Selection for all new engineering and design applications and for repetitive use shall be made from this document.

APPROVED 30 April 1993 REVISED

P. A. AS Other Cust MR 99	INTERNATIONAL INTEREST	TITLE CHANNEL, STYLE I ALUMINUM ALLOY 2024	MILITARY STANDARD MS14363
PROCUREMENT SPECIFICATION QQ-A-200	SUPERSEDES:		PAGE 1 OF 1

DD FORM 1 MAY 73 672-1 (COORDINATED)

PREVIOUS EDITIONS OF THIS FORM ARE OBSOLETE

9540-0094

Source: https://assist.dla.mil -- Downloaded: 2026-10-23T13:41Z
Check the source to verify that this is the current version before use.