FED SUP CLASS
5935

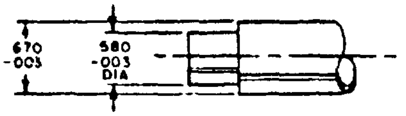
670
-005
580
-003
DIA

DETAIL A SHOWING CONTACT END ONLY

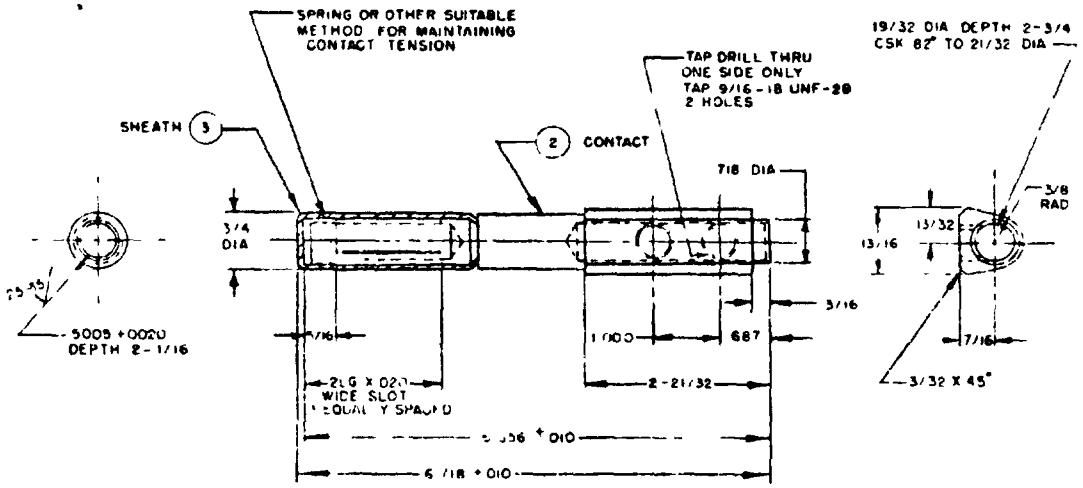
SPRING OR OTHER SUITABLE METHOD FOR MAINTAINING CONTACT TENSION
19/32 DIA DEPTH 2-3/4 CSK 82° TO 21/32 DIA
TAP DRILL THRU ONE SIDE ONLY TAP 9/16-18 UNF-2B 2 HOLES
SHEATH ③
② CONTACT
718 DIA
3/8 RAD
3/4 DIA
13/32
13/16
25-35
.5005 +.0020 DEPTH 2-1/16
1/16
3/16
1.000
687
7/16
2-21/32
3/32 X 45°
.216 X .020 WIDE SLOT 4 EQUALLY SPACED
5.556 +.010
6.718 +.010

| PART NO |
|---|
| MS27283-1 |

1. MATERIAL ② COPPER ALLOY - SEE PROCUREMENT SPECIFICATION
2. FINISH SEE PROCUREMENT SPECIFICATION
3. (B) UNLESS OTHERWISE SPECIFIED MACHINED SURFACES 125√ OR BETTER PER ANSI B46 1 1962
4. REMOVE ALL BURRS AND BREAK SHARP EDGES
5. ALL DIMENSIONS SHOWN ARE FOR FINISHED PART AFTER PLATING
6. DIMENSIONS IN INCHES, UNLESS OTHERWISE SPECIFIED TOLERANCES ON FRACTIONS ±1/64, DECIMALS ±0 005
7. ALL DIAMETERS MUST BE CONCENTRIC TO EACH OTHER WITHIN 0 004 TIR

⑨ REACTIVATED AFTER 8 MARCH 1974 USE WITH MS27282

FOR DESIGN FEATURE PURPOSES THIS STANDARD TAKES PRECEDENCE OVER PROCUREMENT DOCUMENTS REFERENCED HEREIN
REFERENCED DOCUMENTS SHALL BE OF THE ISSUE IN EFFECT ON DATE OF INVITATIONS FOR BID

APPROVED 7 Oct 63 REVISED (A) 17 Jul 67 (B) 8 Mar 74

P A
Air Force - 11
Other Cust

TITLE
CONTACT, ELECTRICAL PLUG CONNECTOR, RAMP POWER
416/240 VOLTS LARGE FEMALE

MILITARY STANDARD
MS27283(USAF)

PROCUREMENT SPECIFICATION
MIL-C-38159

SUPERSEDES

SHEET OF

DD FORM 672-1