NOTICE.—When Government drawings, specifications, or other data are used for any purpose other than in connection with a definitely related Government procurement operation, the United States Government thereby incurs no responsibility, nor any obligation whatsoever; and the fact that the Government may have formulated, furnished, or in any way supplied the said drawings, specifications, or other data is not to be regarded by implication or otherwise as in any manner licensing the holder or any other person or corporation, or conveying any rights or permission to manufacture, use, or sell any patented invention that may in any way be related thereto.

This military standard is approved by the Department of Defense and is mandatory on all activities. Selection for all new engineering and design applications and for repetitive use shall be made from this document.

FED. SUP CLASS
6640

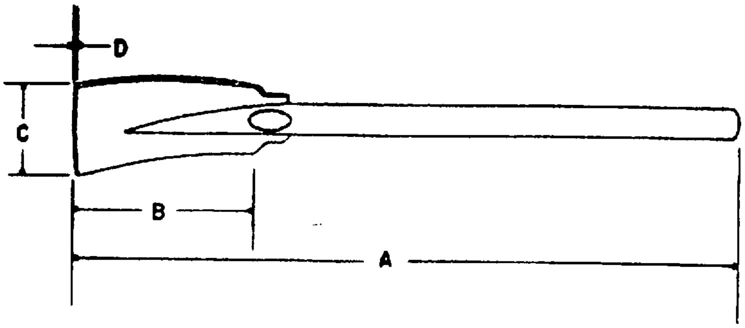

PART NUMBER	DIMENSIONAL DATA millimeters	
	A LENGTH OVERALL	B LENGTH OF B
MS36306-1	140	

CANCELLED

CANCELLED AFTER 2 FEB 1989, NO SUPERSEDING STANDARD

MATERIAL: Blade sha
Compos
pho
ass in
specification

all be smoothly ground
shall be chromium plated

shall be in accordance with the
ation. The blade shall fit into the
ely 10 millimeters and be securely soldered
d. Dimensions are approximate except where
s are given.

. For design feature purposes, this standard takes precedence over procurement documents referenced herein.

2. Referenced documents shall be of the issue in effect on date of invitations for bid.

Ⓐ CANCELLATION

APPROVED 28 JUN 1963 REVISED Ⓐ 2 FEB 1989

P.A. MS Other Cust Bulled MAA	TITLE SECTION LIFTER, DISSECTING	MILITARY STANDARD **MS36306**	
Procurement Specification GG-L-310	SUPERSEDES:	SHEET 1 OF 1	

DD FORM 1 SEP 57 672 (Coordinated) PREVIOUS EDITIONS OF THIS FORM ARE OBSOLETE.

AMSC N/A

DISTRIBUTION STATEMENT A. Approved for public release; distribution is unlimited.

Source: https://assist.dla.mil -- Downloaded: 2026-10-23T17:38Z
Check the source to verify that this is the current version before use.