FED. SUP CLASS
5935

This military standard is approved for use by Engineering and Technical Support Division, AFALD/PTS, Department of the Air Force and is available for use by all Departments and Agencies of the Department of Defense.

Reviewer activities: AF - 11, 17, 99
DLA - ES

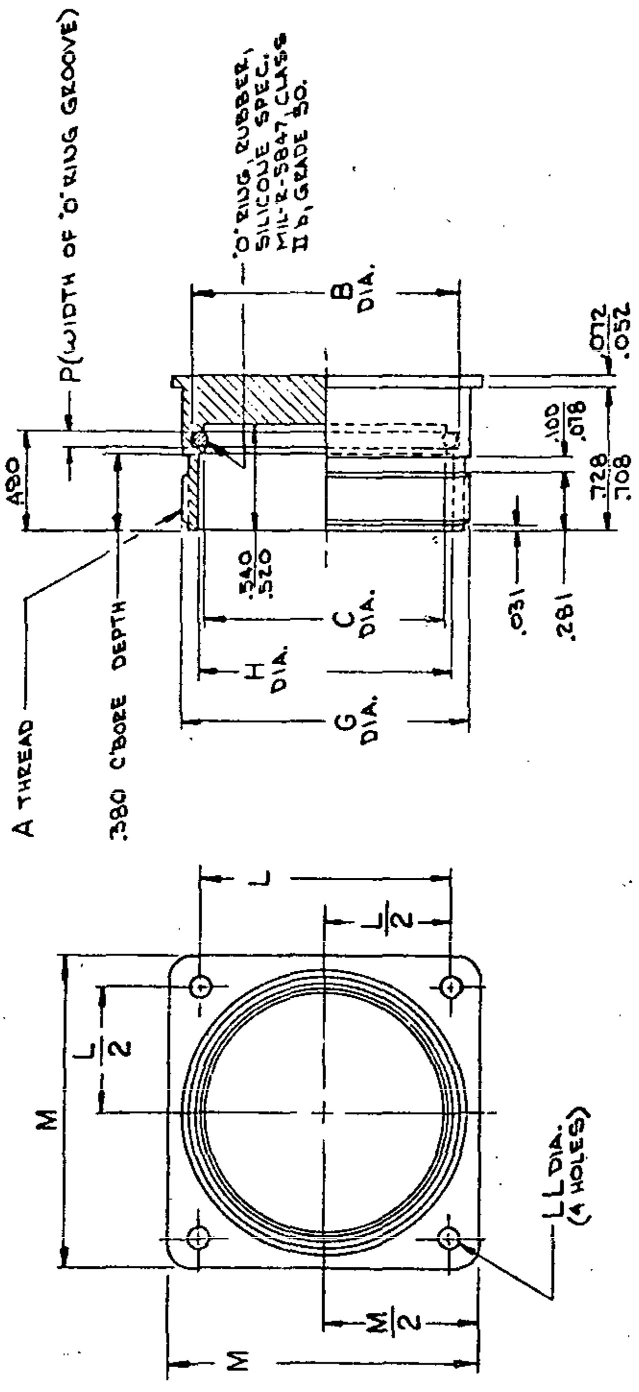
P (WIDTH OF 'O' RING GROOVE)
'O' RING, RUBBER, SILICONE SPEC. MIL-R-5847, CLASS II b, GRADE 50.
B DIA.
.072
.052
.100
.078
.728
.708
.480
.540
.520
.031
.281
A THREAD
.380 C'BORE DEPTH
C DIA.
H DIA.
G DIA.
L
L/2
M
L/2
LL DIA. (4 HOLES)
M/2
M

FOR DIMENSIONS AND DETAILS APPLICABLE TO THIS DRAWING SEE SHEET 2.

INACTIVE FOR AIR FORCE ... EQUIPMENT.

Ⓕ CANCELED-FOR PROCUREMENT USE MIL-C-83723/61

83723/61 which is interchangeable.

APPROVED 15 Aug 63 REVISED Ⓕ 25 Feb 81

Ⓕ denotes changes

P.A AF - 85 Other Cust	International Interest	TITLE CONNECTOR, RECEPTACLE, ELECTRICAL, DUMMY STOWAGE, THREADED COUPLING	MILITARY STANDARD MS27296(USAF)
Procurement Specification NONE		SUPERSEDES:	PAGE 1 OF 1

DD FORM 1 MAY 73 672 (LIMITED COORDINATION)

5935-F157-2

Source: https://assist.dla.mil -- Downloaded: 2026-10-23T15:21Z
Check the source to verify that this is the current version before use.

☆U.S. GOVERNMENT PRINTING OFFICE: 1981 — 703-023/1139