FED. SUP CLASS
5935

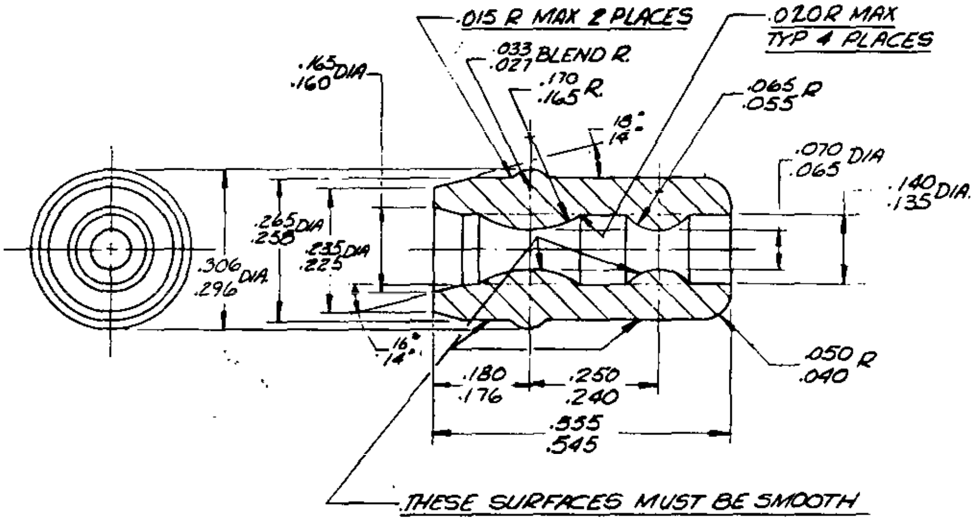
.015 R MAX 2 PLACES
.020 R MAX TYP 4 PLACES
.033 .027 BLEND R.
.170 .165 R.
.165 .160 DIA
.065 .055 R
18° 14°
.070 .065 DIA
.140 .135 DIA.
.265 .258 DIA
.235 .225 DIA
.306 .296 DIA.
16° 14°
.180 .176
.250 .240
.555 .545
.050 .040 R
THESE SURFACES MUST BE SMOOTH

Ⓑ Cancelled for procurement use
MIL-C-39029/54 or /55

NOTES:

1. PART MUST BE FREE OF FLASH, CRACKS, OR CAVITIES.
2. ALL DIAMETERS SHALL BE CONCENTRIC WITHIN .004 T.I.R.
3. CORNER RADII SHALL BE .008 MAX. UNLESS OTHERWISE SPECIFIED.
4. IMMEDIATELY AFTER MOLDING, CURE BOOTS.
5. ALL DIMENSIONS ARE AFTER CURING.

Review activities:
Air Force - 99

This military standard is approved for use by the Department of the Air Force and is available for use by all Departments and Agencies of the Department of Defense.

APPROVED 15 JUNE 65 REVISED Ⓐ 5 JAN 66 Ⓑ 6 Nov 79

P.A. AIR FORCE 85 Other Cust	TITLE BOOT, SEALING, COAXIAL CONTACTS	MILITARY STANDARD MS27397(USAF)
PROCUREMENT SPECIFICATION MIL-C-26636	SUPERSEDES:	SHEET 1 OF 1

DD FORM 1 SEP 67 672-1 (LIMITED COORDINATION) PREVIOUS EDITIONS OF THIS FORM ARE OBSOLETE

5935-F-146-1

Source: https://assist.dla.mil -- Downloaded: 2026-10-23T15:23Z
Check the source to verify that this is the current version before use.