This military standard is approved by the Department of Defense and is mandatory for use by all Departments & Agencies of the Department of Defense. Selection for all new engineering and design applications and for repetitive use shall be made from this document

FED. SUP CLASS
5935

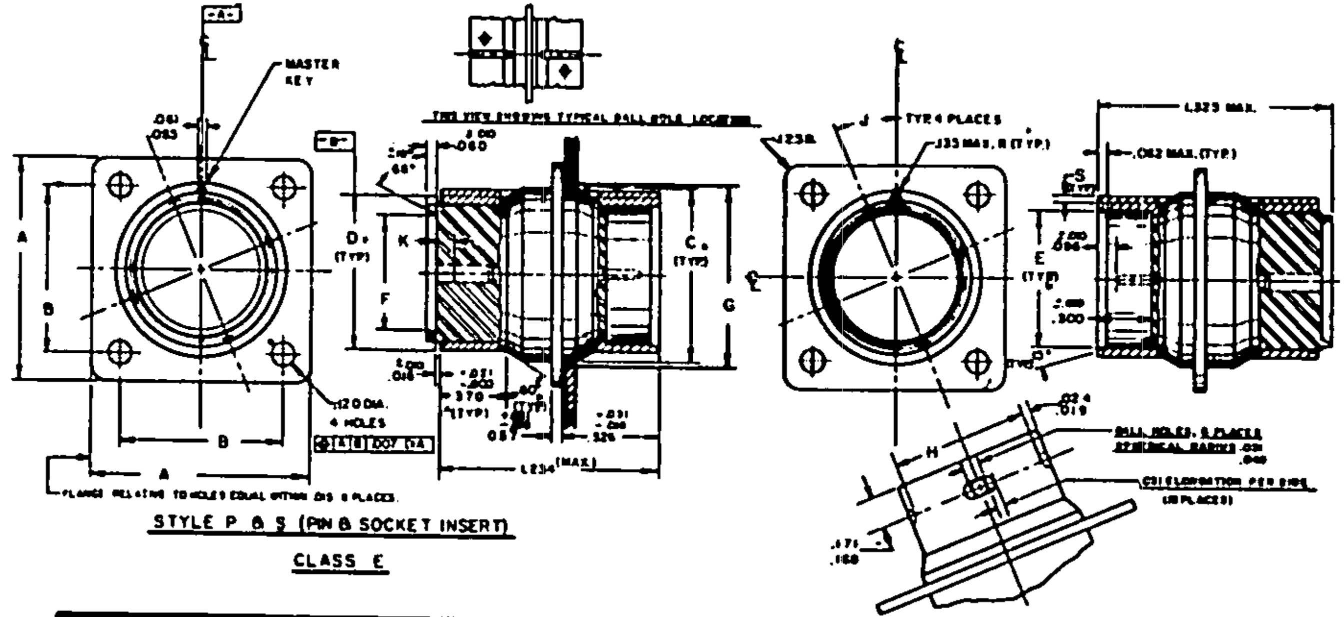

-A-
MASTER KEY
.061
.055
A
B
.120 DIA. 4 HOLES
⊕ A B .007 DIA
FLANGE RELATIVE TO HOLES EQUAL WITHIN .015 4 PLACES
-B-
D (TYP)
K
F
.100
.060
68°
.021
.003
.370 (TYP)
.087
1.234 (MAX)
.031
.326
C (TYP)
G
THIS VIEW SHOWS TYPICAL BALL HOLE LOCATION
.123 R
J
TYP 4 PLACES
.133 MAX. R (TYP)
E (TYP)
.062 MAX. (TYP)
S (TYP)
1.323 MAX.
.300
.022
.019
H
BALL HOLES, 6 PLACES
SPHERICAL RADIUS .031 .040
.171
.160

STYLE P & S (PIN & SOCKET INSERT)

CLASS E

SHELL SIZE DASH NO.	A MAX LENGTH SIDE	B BSC MOUNTING CENTERS	C MAX DIA FRONT & REAR (TYP)	D +.000 -.004 SHELL O.D.	E +.003 -.007 SHELL I.D.	F INSERT SEAL I.D.	G MIN DIA. MOUNTING HOLE	H +.002 -.002 BALL HOLE SPACING	J BALL HOLE LOCATION	K POINT OF SPRING CONTACT	S +.005 -.004 HEIGHT OF KEY	FOR INSERT ARRANGEMENT SEE DWG.
-3	896	.625	.570	.435	.364	.244	.632	.396	30°	[illegible]	.045	MS33698
-7	1.021	.719	.691	.570	.480	.370	.698	.531	22½°			MS33699
-12	1.114	.812	.828	.704	.621	.510	.835	.666				MS33700
-19	1.200	.906	.933	.843	.760	.650	.960	.804				MS33701
-27	1.302	.969	1.138	.998	.915	.803	1.143	.939				MS33702
-37	1.438	1.187	1.266	1.120	1.037	.927	1.273	1.061				MS33703

DIMENSIONS IN INCHES, UNLESS OTHERWISE SPECIFIED.
TOLERANCE: DECIMALS ±.010 ANGULAR TOLERANCE ±1/2°

NOTES.
1 TRUE POSITION (TP) TOLERANCES ARE IN ACCORDANCE WITH MIL-STD-8.
2 DIMENSIONS LOCATED TRUE POSITION ARE BASIC.

SAMPLE OF PART NO.

MS3139 E 10-20 S Y

MS NUMBER — CLASS — SIZE — INSERT ARR. — CONTACT STYLE — ALTERNATE INSERT POSITION

THIS STANDARD TAKES PRECEDENCE OVER DOCUMENTS REFERENCED HEREIN. REFERENCED DOCUMENTS SHALL BE OF THE ISSUE IN EFFECT ON DATE OF INVITATION FOR BID.

APPROVED 27 JUL. 60 REVISED Ⓐ 10 SEPT 1962 Ⓑ 1 NOV 1965 Ⓒ 6 Mar 67. Ⓓ 21 JULY 1971

P.A. NAVY-AS Other Cust USAF-11 ARMY-EL	International Interest	TITLE CONNECTOR, RECEPTACLE, ELECTRIC THRU BULKHEAD, WALL MTG. FLANGE, SERIES 1 (CLASS E)	MILITARY STANDARD MS3139
Procurement Specification MIL-C-81703		SUPERSEDES:	SHEET 1 OF 1

DD FORM 10 APR 64 672 (Coordinated) PREVIOUS EDITIONS OF THIS FORM ARE OBSOLETE

5935-1761-6

Source: https://assist.dla.mil -- Downloaded: 2026-10-23T12:59Z
Check the source to verify that this is the current version before use.