FED SUP CLASS
2 0

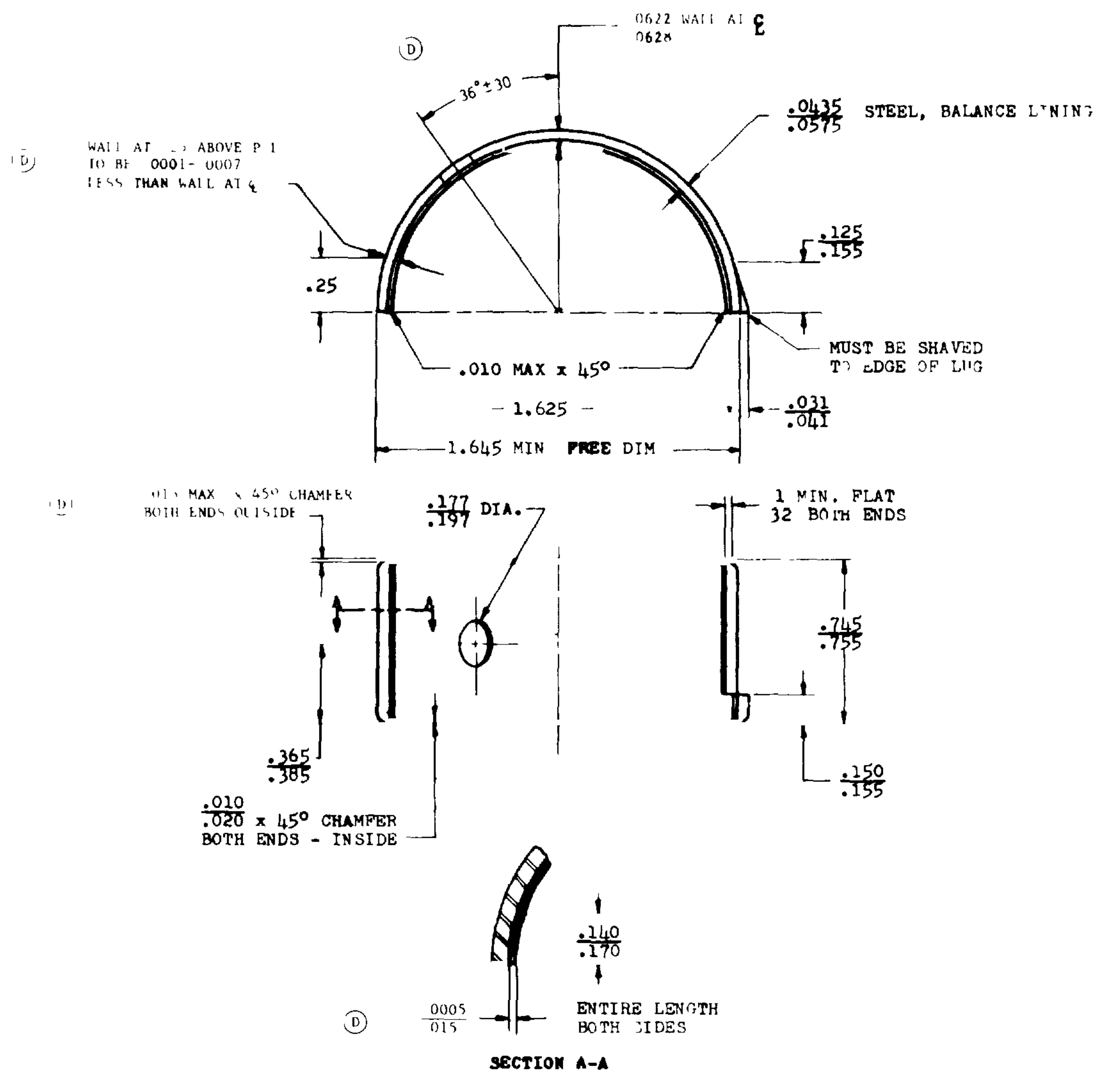

(D)
0622 WALL AT ℄
0628
36° ± 30
.0435
.0575
STEEL, BALANCE LINING
(D)
WALL AT .25 ABOVE P L
TO BE 0001 - 0007
LESS THAN WALL AT ℄
.125
.155
.25
MUST BE SHAVED
TO EDGE OF LUG
.010 MAX x 45°
1.625
.031
.041
1.645 MIN FREE DIM
(D)
.015 MAX x 45° CHAMFER
BOTH ENDS OUTSIDE
.177
.197
DIA.
1 MIN. FLAT
32 BOTH ENDS
.745
.755
.365
.385
.150
.155
.010
.020 x 45° CHAMFER
BOTH ENDS - INSIDE
.140
.170
(D)
0005
015
ENTIRE LENGTH
BOTH SIDES
SECTION A-A

NOTES

MATERIAL COPPER-LEAD LINING S A E NO 49
ON STEEL, S A E NO 1008 OR 1010

2 PLATING LEAD-TIN PLATE I D (6 IN TIN) TO A THICKNESS 001
NOMINAL FLASH-TIN PLATE ALL OVER AFTER LEAD-TIN PLATE

3 IN 1 625 DIA INSPECTION BLOCK WITH ONE PARTING LINE FACE AGAINST
A STOP AT HORIZONTAL CENTER LINE OF BLOCK AND A PRESSURE OF 945 LBS
ON OTHER P L FACE HEIGHT WILL BE 8135 - 8145 ON SIDE OPPOSITE STOP

4 REMOVE ALL BURRS

5 MS PART NUMBER AND PART MANUFACTURER S IDENTIFICATION TO BE
CLEARLY MARKED WITHOUT INTERFERING WITH THE FUNCTION OF THE PART

(D) 6 TOLERANCES UNLESS OTHERWISE SPECIFIED LINEAR MACHINED DIMENSIONS
± 010 ANGULAR MACHINED DIMENSIONS ±3° UNLESS OTHERWISE SPECIFIED
DO NOT SCALE DRAWING

7 FOR DESIGN FEATURE PURPOSES THIS STANDARD TAKES PRECEDENCE OVER
PROCUREMENT DOCUMENTS REFERENCED HEREIN

8 REFERENCED DOCUMENTS SHALL BE OF THE ISSUE IN EFFECT ON DATE OF
INVITATIONS FOR BID

9 ALL DIMENSIONS IN INCHES

REVIEW INTEREST DC3C, 69
USER INTEREST YD, ATAC

This Military Standard is approved by the Department of Defense and is mandatory for
use by all Departments and Agencies of the Department of Defense. Selection for all new
design and for repetitive use shall be made from this document.

APPROVED REVISED (A) 15 DEC 1965 (B) 29 MARCH 1982 (C) 8 NOVEMBER 1982 (D) 2 SEPTEMBER 1983

P A ME Other Cust	TITLE BEARING, SLEEVE ENGINE, PLAIN, 1-1/2 X 3/4	PART NO MS 13836-1 **MILITARY STANDARD** **MS 13836(ME)**
PROCUREMENT SPECIFICATION	SUPERSEDES	SHEET 1 OF 1