FED. SUP CLASS. 5355 Ⓔ

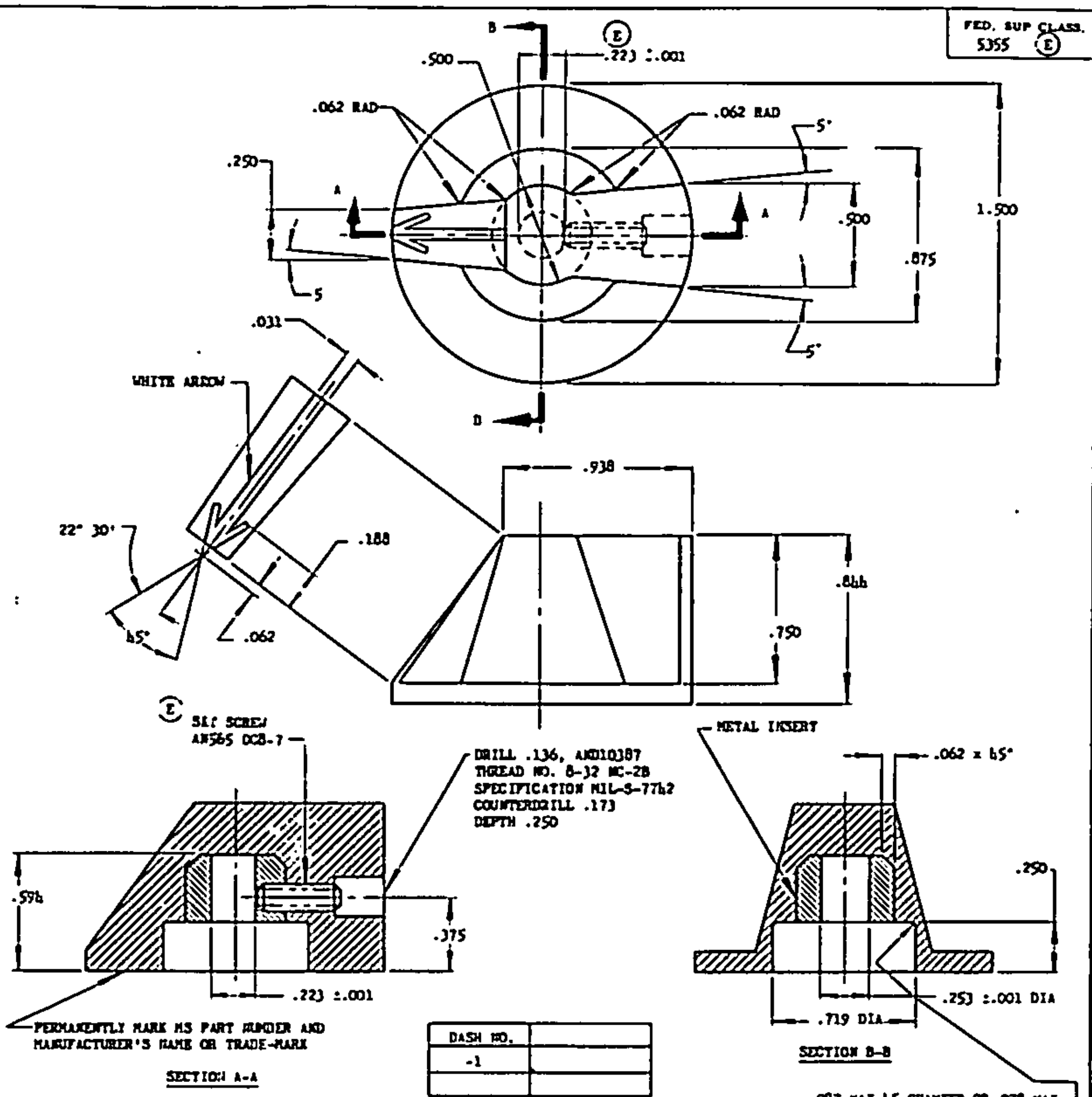
B
Ⓔ
.500
.223 ±.001
.062 RAD
.062 RAD
5°
.250
A
A
5
.500
.875
1.500
5°
.031
B
WHITE ARROW
.938
22° 30'
.188
.844
.750
45°
.062
Ⓔ SET SCREW AN565 DC8-7
DRILL .136, AND10387
THREAD NO. 8-32 NC-2B
SPECIFICATION MIL-S-7742
COUNTERDRILL .173
DEPTH .250
METAL INSERT
.062 x 45°
.594
.375
.250
.223 ±.001
.253 ±.001 DIA
.719 DIA
PERMANENTLY MARK MS PART NUMBER AND MANUFACTURER'S NAME OR TRADE-MARK
SECTION A-A
SECTION B-B
.087 MAX 45 CHAMFER OR .078 MAX RADIUS FILLET RADII

DASH NO.	
-1	

Ⓔ MATERIAL: TRANSPARENT PLASTIC.
INSERT, BRASS QQ-B-611, COMP B, 1/2 HARD SETSCREW, CRES, MIL-S-7720, COMP 303S OR 303SE.

Ⓔ FINISH: THE ENTIRE OUTER SURFACE OF KNOB, EXCEPT FOR THE WHITE ARROW, SHALL BE COATED WITH A GRAY MAT MATERIAL HAVING A DARK DULL GRAY COLOR CONFORMING TO COLOR NUMBER 36231 IN ACCORDANCE WITH FED STANDARD No. 595.
INSERT, NONE. SETSCREW, PASSIVATE.

CONTRAST OF THE WHITE ARROW AND GRAY COATING SHALL BE NOT LESS THAN 2.5 WHEN DETERMINED AS SPECIFIED IN SPECIFICATION MIL-P-7788.

BREAK ALL SHARP EDGES AND CORNERS.

DIMENSIONS IN INCHES. UNLESS OTHERWISE SPECIFIED, TOLERANCES: DECIMALS ±.016, ANGLES ±2° 0'.

THIS STANDARD TAKES PRECEDENCE OVER DOCUMENTS REFERENCED HEREIN.

REFERENCED DOCUMENTS SHALL BE OF THE ISSUE IN EFFECT ON DATE OF INVITATIONS FOR BID.

Users: Army - WC

Reviewers: DISC, USAF - ASD 11, Navy - Ships

This military standard is approved by the Department of Defense and is mandatory on all activities. Selection for all new engineering and design applications and for repetitive use shall be made from this document.

APPROVED 6 Jul 55 REVISED Ⓐ 10 Oct 55 Ⓑ 22 Jan 57 Ⓒ 26 May 58 Ⓓ 10 Sep 58 Ⓔ 4 Nov 64

P.A. NAVY - WP Ⓔ Other Cust Army - WC USAF - 11	TITLE KNOB, POINTER, ILLUMINATED	MILITARY STANDARD MS25166 Ⓔ
PROCUREMENT SPECIFICATION MIL-K-25049 Ⓔ	SUPERSEDES: MS 25166(ASG) Ⓔ	SHEET 1 OF 1

DD FORM 1 SEP 57 672-1 (Coordinated)

PREVIOUS EDITIONS OF THIS FORM ARE OBSOLETE.

Source: https://assist.dla.mil -- Downloaded: 2026-10-23T15:04Z
Check the source to verify that this is the current version before use.