This military standard has been approved by the Department of Defense
and is mandatory for use by all Departments and Agencies of the
Department of Defense. Selection for all new engineering design
applications and for repetitive use shall be made from this document.

Reviewers:
Army - GL
Navy - YD
Air Force - 11, 69
DSA-IS

Users:
WC, MO, CE

FED. SUP CLASS
5340

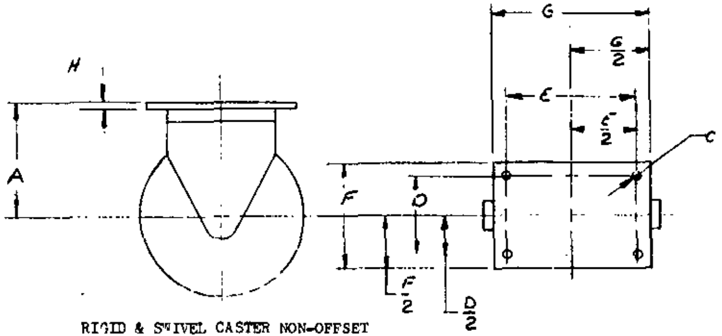

RIGID & SWIVEL CASTER NON-OFFSET

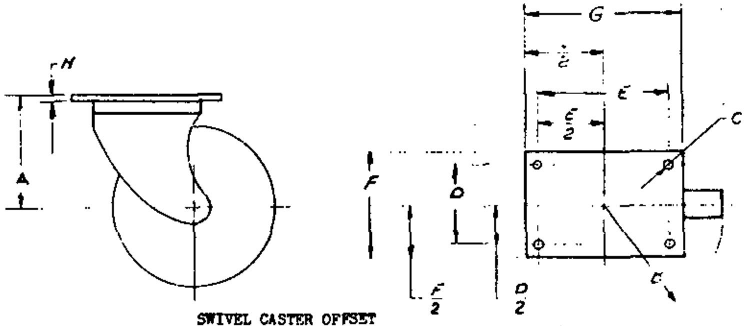

SWIVEL CASTER OFFSET

DIMENSIONS IN INCHES.

FOLLOWING NOTES APPLY TO MS PART NO. TABLE (SEE SHEET 2):

(a) DASH NUMBERS -6, -8, -9, & -10 DESIGNATE THE WHEEL SIZE AS DESIGNATED BY THE "TIRE SIZE" COLUMN.

THE FIRST DASH LETTERS DESIGNATE THE STYLE OF CASTER AS FOLLOWS:
R - RIGID
N - NONOFFSET SWIVEL
W - OFFSET SWIVEL

THE SECOND DASH LETTERS DESIGNATE THE TYPE OF WHEEL AS FOLLOWS:
S - SINGLE
D - DUAL

THE THIRD DASH LETTERS DESIGNATE THE MOUNTING AS FOLLOWS:
C - CANTILEVER MOUNTED (SINGLE & DUAL WHEELS)
F - FORK MOUNTED (SINGLE WHEELS ONLY)

ADDITIONAL DASH LETTERS SHALL BE ADDED TO CASTERS, WHEN REQUIRED;
TO DESIGNATE THE FOLLOWING:
P - STEERING PROVISIONS
B - BRAKES INSTALLED

(b) APPLIES ONLY TO OFFSET SWIVEL CASTERS

EXAMPLE OF PART NO. MS27281-6WSFP: SIZE 3.50 X 6, OFFSET SWIVEL, SINGLE WHEEL, FORK MOUNTED, STEERING PROVISIONS

FOR DESIGN FEATURE PURPOSES, THIS STANDARD TAKES PRECEDENCE
OVER PROCUREMENT DOCUMENTS REFERENCED HEREIN.

REFERENCED DOCUMENTS SHALL BE OF THE ISSUE IN EFFECT ON
DATE OF INVITATION FOR BID.

Ⓐ CANCELLED - WITH NO SUPERSEDING STANDARD.

APPROVED 3 SEP 65 REVISED Ⓐ 31 Jul 78

P.A. Air Force - 11 Other Cust: Army - WC Navy - YD	TITLE CASTERS, RIGID AND SWIVEL, PRECISION, SPRING MOUNTED, PNEUMATIC TIRED
PROCUREMENT SPECIFICATION MIL-C-4751	SUPERSEDES:

MILITARY STANDARD

MS27281

SHEET 1 OF 2

DD FORM (SEP 67) 672-1 (Limited coordination) PREVIOUS EDITIONS OF THIS FORM ARE OBSOLETE.

Source: https://assist.dla.mil -- Downloaded: 2026-10-23T15:20Z
Check the source to verify that this is the current version before use.

☆U.S. GOVERNMENT PRINTING OFFICE: 1978—603-002/4766