NOTICE.—When Government drawings, specifications, or other data are used for any purpose other than in connection with a definitely related Government procurement operation, the United States Government thereby incurs no responsibility, nor any obligation whatsoever; and the fact that the Government may have formulated, furnished, or in any way supplied the said drawings, specifications, or other data is not to be regarded by implication or otherwise as in any manner licensing the holder or any other person or corporation, or conveying any rights or permission to manufacture, use, or sell any patented invention that may in any way be related thereto.

NOTE.—This drawing was approved by joint action of the Air Force and Navy Department as the Air Force-Navy standard for this product. This drawing supersedes all antecedent standard drawings for the same product and shall become effective for the procurement of aeronautical supplies, or for use in new design, not later than six months after the latest date of approval shown.

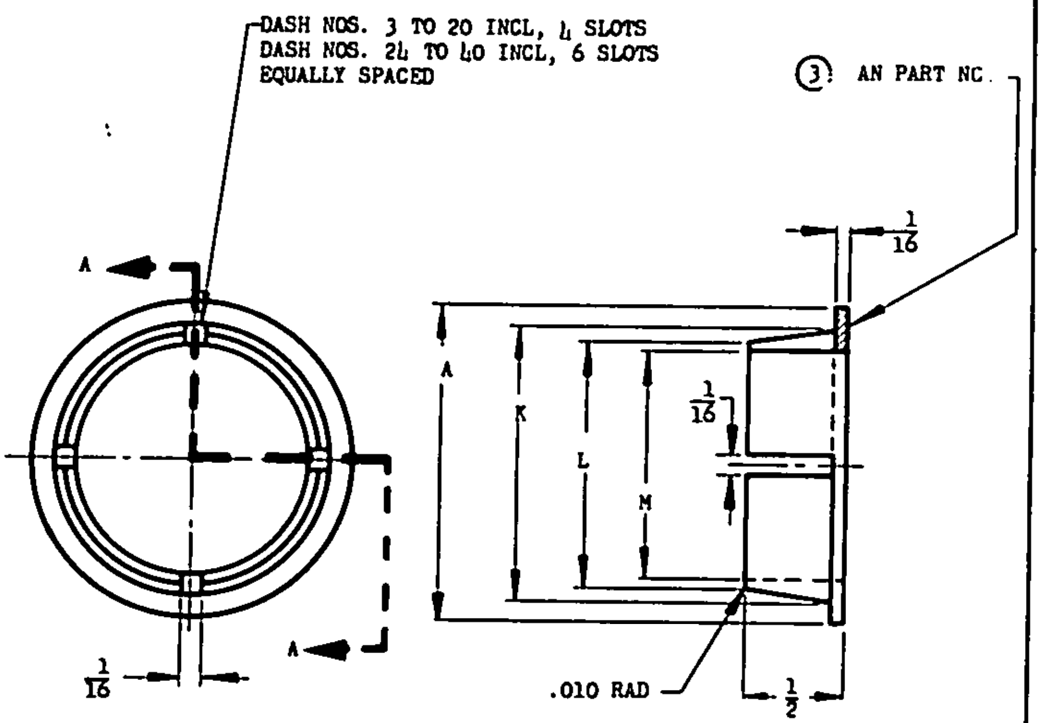
DASH NOS. 3 TO 20 INCL, 4 SLOTS
DASH NOS. 24 TO 40 INCL, 6 SLOTS
EQUALLY SPACED
③ AN PART NO.
A
A
1/16
1/16
1/16
A
K
L
M
.010 RAD
1/2

SECTION A-A

AN PART NO.	CONDUIT SIZE	A DIA	K DIA	L DIA	M DIA
AN3053-3	3/16	.448	.332	.219	.198
AN3053-4	1/4	.566	.394	.281	.260
AN3053-6	3/8	.682	.519	.406	.385
AN3053-8	1/2	.807	.669	.556	.510
AN3053-10	5/8	.932	.794	.681	.635
AN3053-12	3/4	1.105	.929	.816	.760
AN3053-16	1	1.355	1.214	1.101	1.010
AN3053-20	1-1/4	1.668	1.469	1.356	1.261
AN3053-24	1-1/2	1.918	1.724	1.611	1.511
AN3053-28	1-3/4	2.160	1.976	1.863	1.761
AN3053-32	2	2.410	2.229	2.116	2.011
AN3053-40	2-1/2	2.910	2.744	2.631	2.512

MATERIAL: ALUMINUM, SPECIFICATION QQ-A-411, WW-T-783, OR QQ-A-591.

EXAMPLE OF PART NO.: AN3053-4 = FERRULE FOR 1/4 OD CONDUIT.

REMOVE ALL BURRS AND SHARP EDGES.

DIMENSIONS IN INCHES. UNLESS OTHERWISE SPECIFIED, TOLERANCES: FRACTIONS ±1/64, DECIMALS ±.005.

APPROVED 2 Feb 40 REVISED ① 8 Dec 41 ② 2 Apr 47 ③ 13 May 52

PROCUREMENT SPECIFICATION	AIR FORCE-NAVY AERONAUTICAL STANDARD	AN3053
NONE	FERRULE - RIGID CONDUIT	

Source: https://assist.dla.mil -- Downloaded: 2026-10-26T14:18Z
Check the source to verify that this is the current version before use.