FSC
6220

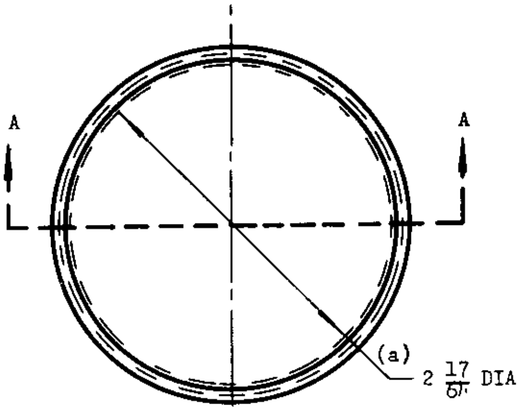

④ CANCELLED AFTER 19 JUNE 1981.

NO SUPERSEDING STANDARD.

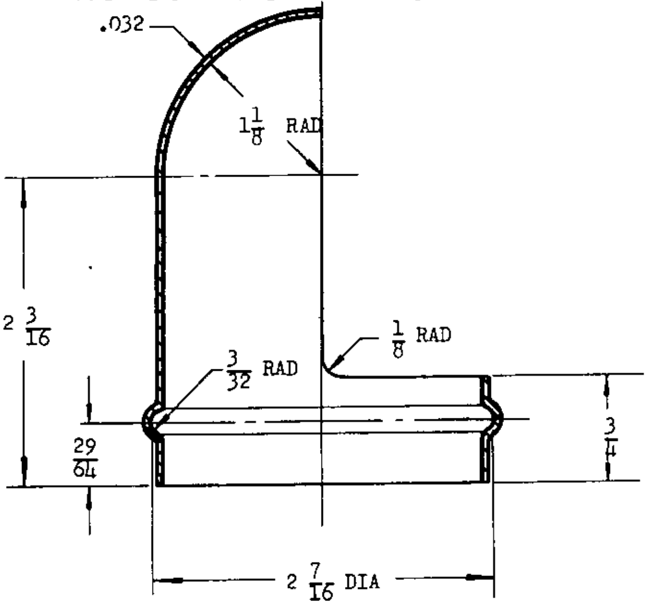

SECTION A-A

AN PART NO.
AN3087-1

(a) TOLERANCES ON HOOD AN3087-1 AND BASE, DRAWING NAF 214995-1 SHALL BE SUCH AS TO PERMIT READY ASSEMBLY OF AN3087-1 TO DRAWING NAF 311241 AND PROVIDE INTERCHANGEABILITY OF PARTS WITHOUT POSSIBILITY OF AN3087-1 BECOMING ACCIDENTALLY DETACHED.

MATERIAL: ALUMINUM, SPECIFICATION QQ-A-561, TYPE 1-I; HEAT TREAT 15,000 LBS SQ IN. ULTIMATE TENSILE STRENGTH.

FINISH: ANODIZE, SPEC MIL-A-8625, OR CHEMICAL FILM, SPEC MIL-C-5541.

DIMENSIONS IN INCHES. UNLESS OTHERWISE SPECIFIED, TOLERANCES: DECIMALS ±.010, FRACTIONS ±1/64.

THE HOOD SHALL BE MARKED WITH THE AN PART NO.

APPROVED 24 Oct 42 REVISED ① 7 Oct 52 ② 23 Oct 53 ③ 3 Jan 67 ④ 19 June 81

PROCUREMENT SPECIFICATION	AIR FORCE–NAVY AERONAUTICAL STANDARD	
NONE	HOOD - BERTH LIGHT	AN3087

NOTICE.—When Government drawings, specifications, or other data are used for any purpose other than in connection with a definitely related Government procurement operation, the United States Government thereby incurs no responsibility, nor any obligation whatsoever; and the fact that the Government may have formulated, furnished, or in any way supplied the said drawings, specifications, or other data is not to be regarded by implication or otherwise as in any manner licensing the holder or any other person or corporation, or conveying any rights or permission to manufacture, use, or sell any patented invention that may in any way be related thereto.

NOTE.—This drawing was approved by joint action of the Air Force and Navy Department as the Air Force-Navy standard for this product. This drawing supersedes all antecedent standard drawings for the same product and shall become effective for the procurement of aeronautical supplies, or for use in new design, not later than six months after the latest date of approval shown.

☆ U.S. GOVERNMENT PRINTING OFFICE: 1981—703-023/5291

Source: https://assist.dla.mil -- Downloaded: 2026-10-26T14:19Z
Check the source to verify that this is the current version before use.