NOTICE.—When Government drawings, specifications, or other data are used for any purpose other than in connection with a definitely related Government procurement operation, the United States Government thereby incurs no responsibility, nor any obligation whatsoever; and the fact that the Government may have formulated, furnished, or in any way supplied the said drawings, specifications, or other data is not to be regarded by implication or otherwise as in any manner licensing the holder or any other person or corporation, or conveying any rights or permission to manufacture, use, or sell any patented invention that may in any way be related thereto.

NOTE.—This drawing was approved by joint action of the Air Force and Navy Department as the Air Force-Navy standard for this product. This drawing supersedes all antecedent standard drawings for the same product and shall become effective for the procurement of aeronautical supplies, or for use in new design, not later than six months after the latest date of approval shown.

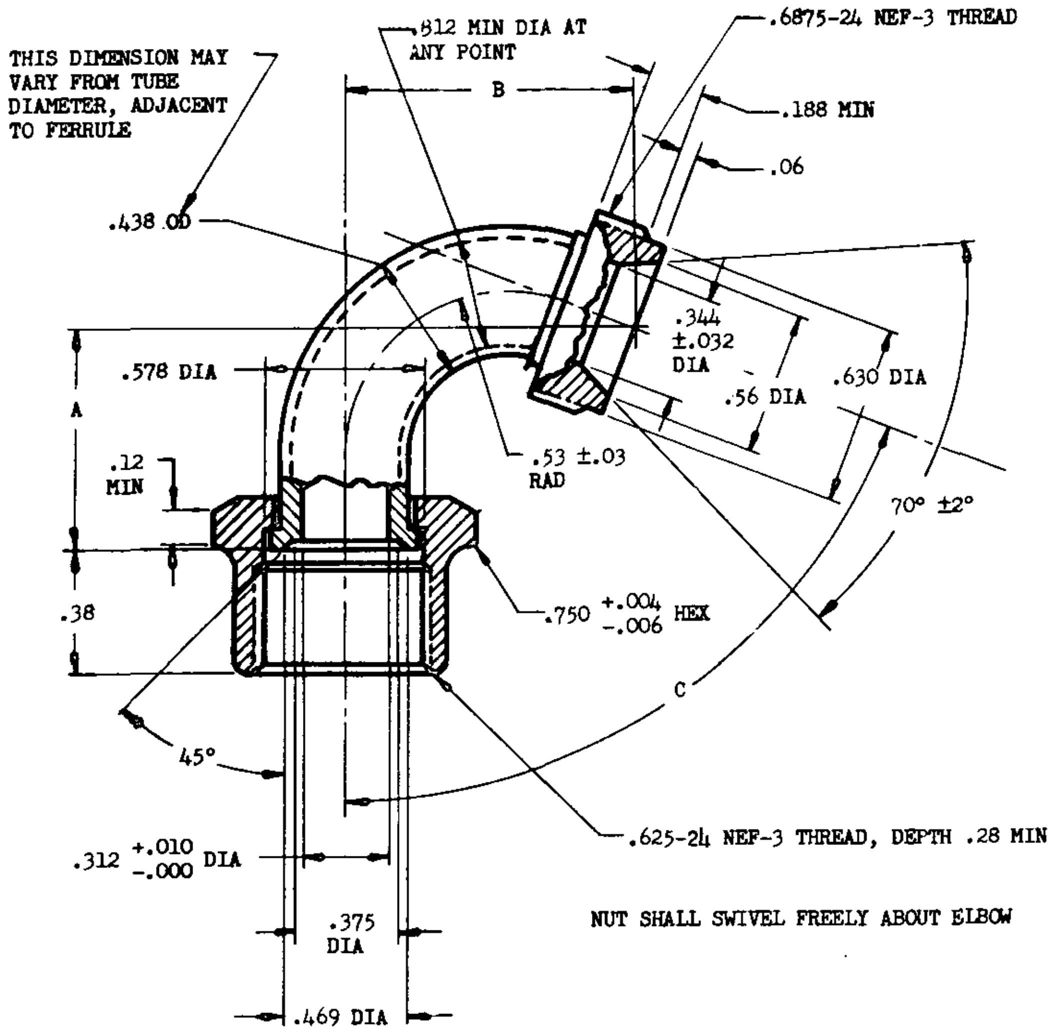
THIS DIMENSION MAY VARY FROM TUBE DIAMETER, ADJACENT TO FERRULE
.812 MIN DIA AT ANY POINT
.6875-24 NEF-3 THREAD
B
.188 MIN
.06
.438 OD
.344 ±.032 DIA
.630 DIA
.56 DIA
A
.578 DIA
.12 MIN
.53 ±.03 RAD
70° ±2°
.38
.750 +.004 −.006 HEX
C
45°
.625-24 NEF-3 THREAD, DEPTH .28 MIN
.312 +.010 −.000 DIA
.375 DIA
.469 DIA

NUT SHALL SWIVEL FREELY ABOUT ELBOW

AN PART NO.	A ±.06	B ±.03	C ±5°
AN3104-1	.75	1.00	70°
AN3104-2	1.06	.97	110°
AN3104-3	.89	.91	90°

WEIGHT: .075 POUND MAXIMUM.

REMOVE ALL BURRS AND SHARP EDGES.

DIMENSIONS IN INCHES. UNLESS OTHERWISE SPECIFIED, TOLERANCES: TWO PLACE DECIMALS ±.02, THREE PLACE DECIMALS ±.010, ANGLES ±.5°.

⑥ CANCELLED AFTER 11 JULY 1972 USE MIL-E-6719

APPROVED 12 Feb 43 REVISED ① 1 Jan 44 ② 12 Feb 44 ③ 15 Feb 45 ④ 15 Nov 49 ⑤ 18 Aug 52 ⑥ 11 JULY 72

PROCUREMENT SPECIFICATION
MIL-E-6719

AIR FORCE-NAVY AERONAUTICAL STANDARD

ELBOW - SHIELDED SPARK PLUG

AN3104

SUPERSEDES USAF DRAWINGS
41A3595 AND 40A1633

☆ U. S. GOVERNMENT PRINTING OFFICE: 1972-714-536/648

Source: https://assist.dla.mil -- Downloaded: 2026-10-26T14:19Z
Check the source to verify that this is the current version before use.