FED. SUP CLASS.
5305

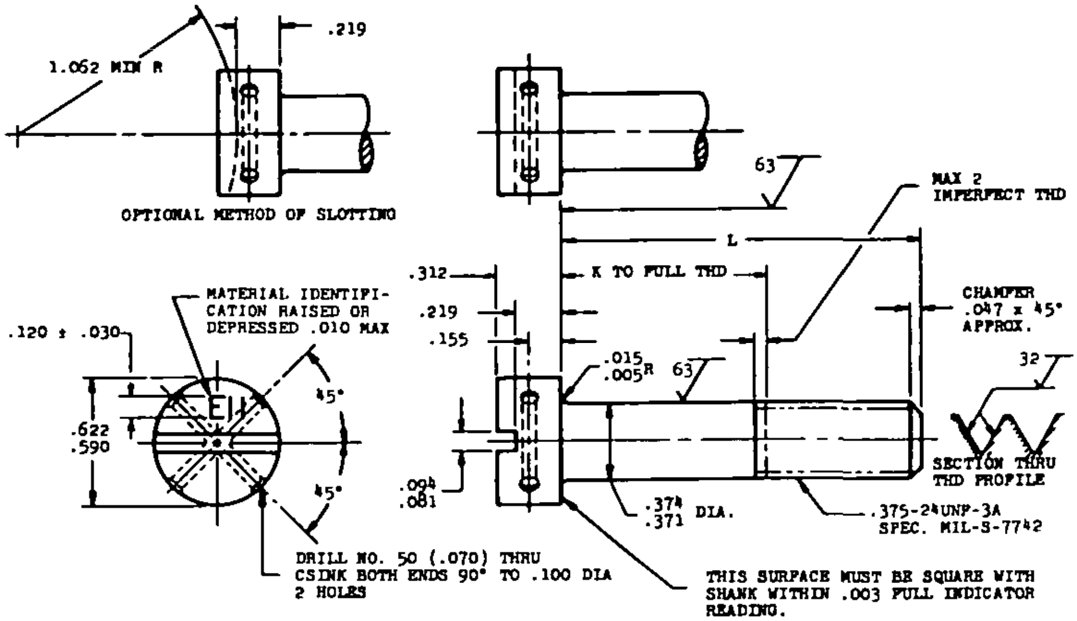

1.062 MIN R
.219
OPTIONAL METHOD OF SLOTTING
63
MAX 2
IMPERFECT THD
L
K TO FULL THD
.312
.219
.155
CHAMFER
.047 x 45°
APPROX.
MATERIAL IDENTIFI-
CATION RAISED OR
DEPRESSED .010 MAX
.120 ± .030
45°
.622
.590
45°
.015
.005R
63
32
.094
.081
.374
.371 DIA.
SECTION THRU
THD PROFILE
.375-24UNF-3A
SPEC. MIL-S-7742
DRILL NO. 50 (.070) THRU
CSINK BOTH ENDS 90° TO .100 DIA
2 HOLES
THIS SURFACE MUST BE SQUARE WITH
SHANK WITHIN .003 FULL INDICATOR
READING.

L	K + .000 - .060	PART NO.	L	K +.000 -.060	PART NO.	L	K +.000 -.060	PART NO.
			1.062	(a)	AN116114	1.812	.812	AN116126
			1.125	.125	AN116115	1.875	.875	AN116127
			1.188	.188	AN116116	1.938	.938	AN116128
.500	(a)	AN116105	1.250	.250	AN116117	2.000	1.000	AN116129
.562	(a)	AN116106	1.312	.312	AN116118	2.125	1.125	AN116130
.625	(a)	AN116107	1.375	.375	AN116119	2.250	1.250	AN116131
.688	(a)	AN116108	1.438	.438	AN116120	2.375	1.375	AN116132
.750	(a)	AN116109	1.500	.500	AN116121	2.500	1.500	AN116133
.812	(a)	AN116110	1.562	.562	AN116122	2.625	1.625	AN116134
.875	(a)	AN116111	1.625	.625	AN116123	2.750	1.750	AN116135
.938	(a)	AN116112	1.688	.688	AN116124	2.875	1.875	AN116136
1.000	(a)	AN116113	1.750	.750	AN116125	3.000	2.000	AN116137

(a) THREAD TO HEAD. MAXIMUM TWO IMPERFECT THREADS.

NOTE: (1) THE RUNOUT FOR STRAIGHTNESS OF SHANK SHALL NOT EXCEED .003 FIR PER INCH OF SCREW LENGTH
(2) THE CONCENTRICITY OF THREAD PD IN RELATION TO THE SHANK SHALL BE WITHIN .006 FIR.
(3) THE CONCENTRICITY OF THE SHANK IN RELATION TO THE HEAD SHALL BE WITHIN .010 FIR.

MATERIAL: STEEL AMS 6322

HARDNESS: ROCKWELL C26-32

SURFACE ROUGHNESS: AS107

MANUFACTURING SPECIFICATION: AMS 7452

② INSPECTION: ALL PARTS SHALL UNDERGO MAGNETIC INSPECTION IN ACCORDANCE WITH AMS2640.

BREAK SHARP EDGES .003-.015 UNLESS OTHERWISE SPECIFIED.

DIMENSIONS IN INCHES. UNLESS OTHERWISE SPECIFIED: TOLERANCES; LINEAR DIMENSIONS ± .010, ANGULAR DIMENSIONS ±2°.

DO NOT USE UNASSIGNED PART NUMBERS.

THIS STANDARD WAS DEVELOPED COOPERATIVELY WITH THE ENGINE AND PROPELLER STANDARD PARTS COMMITTEE OF THE SAE.

APPROVED 8 Jun 49 REVISED ① 4 Oct 54 ② 10 June 1986

DISTRIBUTION STATEMENT A. Approved for public release; distribution is unlimited.

P.A.
USAF - 11
Other Cust
Navy - AS
Army - AV

AIR FORCE-NAVY AERONAUTICAL STANDARD

SCREW - FLAT FILLISTER, DRILLED HEAD, .375-24

AN116101
THRU
AN116150

Project No. 5305-1649

Source: https://assist.dla.mil -- Downloaded: 2026-10-26T14:26Z
Check the source to verify that this is the current version before use.