USER ACTIVITIES: ARMY - AT, EL, ME, MC
NAVY - OC, OS, YD

FED. SUP CLASS
6630

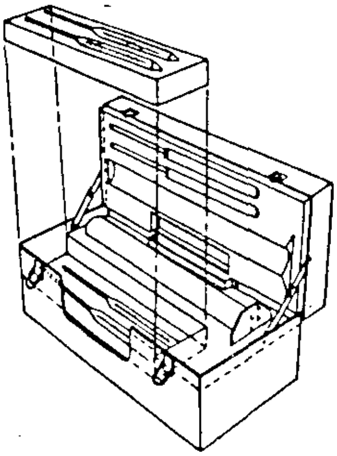

PART NO.	NOMENCLATURE
MS36542-1	Graduated Scale Hydrometer Set

REPLACEABLE COMPONENT PARTS		RANGE	SMALLEST INCREMENTS	ACCURACY RAT	NUMBERED INCREMENTS
MS36542-2	Hydrometers	0.9400 - 0.9800 SP GR	0.0005	-	0.005
MS36542-3	Hydrometers	40 - 70% Vol Alcohol	0.2%		0.5%

NOMINAL O/A CASE DIMENSIONS (mm)			CALIBRATION TEMPERATURE (°F)	THERMOM TEMP RAN
H	W	LG		
221	279	533	60	

MATERIAL: Hydrometers and cylinder
Type I, Class A.

Ballast shal
extend

dia

l be cushioned

rometers, one 1.000 milliliter
g case, and a conversion table

ement type and shall have a stem, a body, and a

urely fastened scale graduated to read specific gravity.

ave a securely fastened scale graduated for percentage readings.

tened in the lower portion of the hydrometer body.

e fastened in the body of the hydrometer with the ballast.

for MS36542-2 shall be graduated in 2°F increments with major graduations numbered in 10°F
ots.

Thermometer for MS36542-3 shall be graduated in 0.2 percent increments with major graduations numbered in 1 percent increments.

Cylinder shall have straight walls and a hexagon-shaped base.

Carrying case shall have a hinged lid with a positive action latch and be so constructed as to protect the glass contents from breakage. The case shall be capable of storing one complete hydrometer set.

CANCELLED

CANCELLED AFTER 9 JUL 1986, NO SUPERSEDING STANDARD

APPROVED 7 OCT 1964 REVISED Ⓐ 9 JUL 1985

Ⓐ CANCELLATION

This military standard is approved by mandatory on all activities. Select applications and for repetitive use of

P.A. MC Other Cust MS 82	TITLE HYDROMETER SET, GRADUATED SCALE	MILITARY STANDARD MS36542
PROCUREMENT SPECIFICATION MIL-H-4940	SUPERSEDES	SHEET 1 OF 2

DD FORM 1 SEP 67 672-1 (Continued)

PREVIOUS EDITIONS OF THIS FORM ARE OBSOLETE

CANCELLATION
Proj. No. 6630-0438

DISTRIBUTION STATEMENT A. Approved for public release; distribution is unlimited.

Source: https://assist.dla.mil -- Downloaded: 2026-10-23T17:43Z
Check the source to verify that this is the current version before use.