FED. SUP CLASS
9905

LEGEND:

A. LIGHT EMITTER AND EXCITER
B. TRANSLUCENT PLASTIC SHELL
C. HOUSING, ALUMINUM

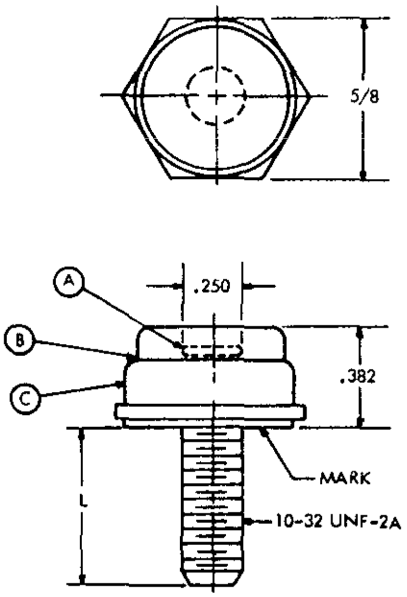

Ⓑ STANDARD REINSTATED 20 MAY 1975

MS PART NO.	CLASS	L
MS 39100-1	A	3/4
MS 39100-2	B	3/4
MS 39100-3	A	7/8
MS 39100-4	B	7/8
MS 39100-5	A	1
MS 39100-6	B	1
MS 39100-7	A	1-1/4
MS 39100-8	B	1-1/4
MS 39100-9	A	1-1/2
MS 39100-10	B	1-1/2
MS 39100-11	A	1-3/4
MS 39100-12	B	1-3/4
MS 39100-13	A	2
MS 39100-14	B	2

NOTES: Ⓒ **CANCELLED AFTER 20 JULY 1981 NO SUPERSEDING DOCUMENT**

1. MATERIAL: ALUMINUM, QQ-A-250/2 PLASTIC, SHEET MIL-P-5425, PLASTIC MOLDING MATERIAL, METHACRYLATE, L-P-380, TYPE II, CLASS 2. STEEL, MIL-S-25043.
2. FINISH: ALUMINUM IN ACCORDANCE WITH MIL-A-8625; STEEL IN ACCORDANCE WITH MIL-C-13924.
3. THREAD SHALL BE IN ACCORDANCE WITH SCREW THREAD STANDARDS FOR FEDERAL SERVICES, HANDBOOK H-28.
4. THIS STANDARD TAKES PRECEDENCE OVER DOCUMENTS REFERENCED HEREIN.
5. REFERENCED DOCUMENTS SHALL BE OF THE ISSUE IN EFFECT ON DATE OF INVITATIONS FOR BID.
6. HEAT TREATMENT: ALUMINUM, TEMPER H-12 OR H-22; PLASTIC, MOLDED, NORMALIZED AT 90°C (194°F) ± 5°C (10°F).
7. UNLESS OTHERWISE SPECIFICED TOLERANCE ARE ± 1/32 INCH.
8. ALL DIMENSIONS ARE IN INCHES.
9. NOMINAL EFFECTIVE MICROLAMBERTS: CLASS A, 35; CLASS B, 8.

APPROVED 7 JUNE 1960 REVISED Ⓐ 17 APPIL 1975 Ⓑ 20 MAY 1975 Ⓒ 20 JULY 1981

P. A. AV Other Cust	INTERNATIONAL INTEREST	TITLE MARKERS, SELF-LUMINOUS; TYPE VII AIRCRAFT EXIT MARKER (STUD MOUNTED) CLASS A & B	**MILITARY STANDARD** **MS 39100**
PROCUREMENT SPECIFICATION MIL-M-3935	SUPERSEDES:		SHEET 1 OF 1

DD FORM 1 MAY 71 672-1 (LIMITED COORDINATION)

PREVIOUS EDITIONS OF THIS FORM ARE OBSOLETE

U.S. GOVERNMENT PRINTING OFFICE: 1981 — 703-023/5437

Source: https://assist.dla.mil -- Downloaded: 2026-10-23T17:46Z
Check the source to verify that this is the current version before use.