NOTICE: When Government drawings, specifications, or other data are used for any purpose other than in connection with a definitely related Government procurement operation, the United States Government thereby incurs no responsibility, nor any obligation whatsoever; and the fact that the Government may have formulated, furnished, or in any way supplied the said drawings, specifications, or other data is not to be regarded by implication or otherwise as in any manner licensing the holder or any other person or corporation, or conveying any rights or permission to manufacture, use, or sell any patented invention that may in any way be related thereto.

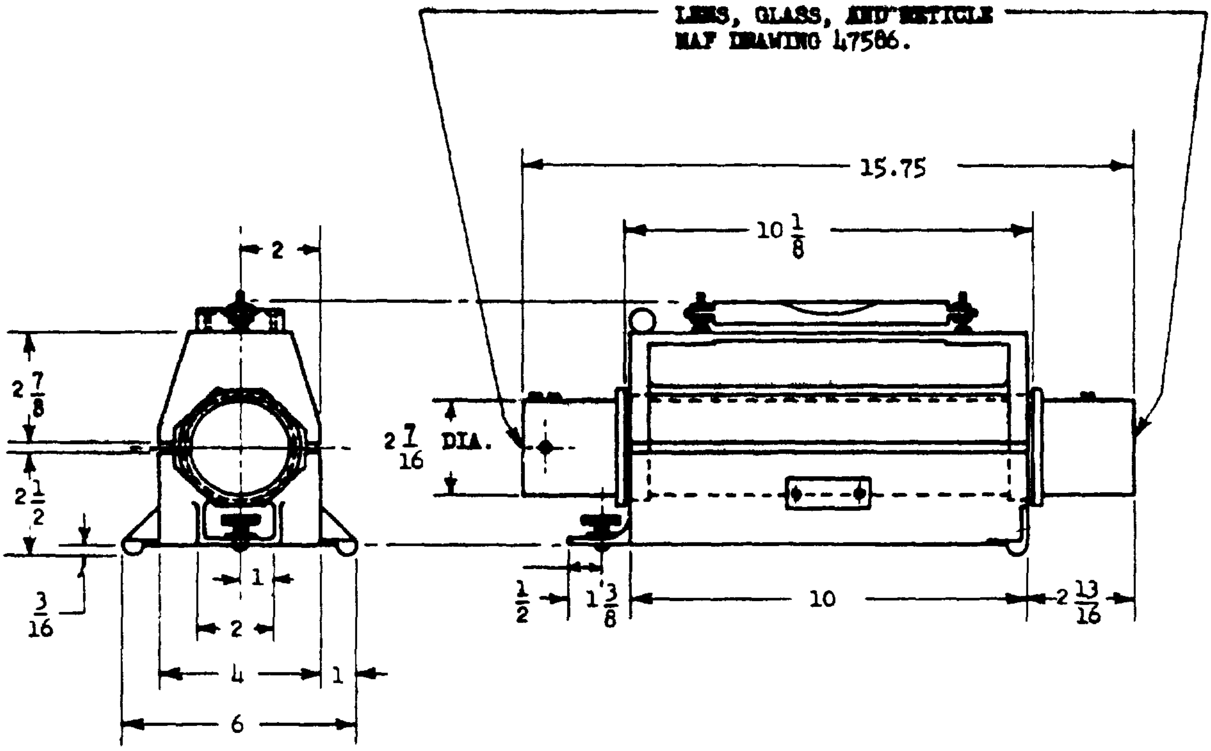

AN PART NO.
AN5853-1

DIMENSIONS IN INCHES. TOLERANCES: FRACTIONS ± 1/64, DECIMALS ±.010, UNLESS OTHERWISE SPECIFIED.

THIS DRAWING IS FOR REFERENCE AND STOCK PURPOSES ONLY. FOR MANUFACTURING DETAILS SEE DRAWING N.A.F. 68569.

THIS DRAWING AND THE SPECIFICATION COMPLEMENT ONE ANOTHER, AND TOGETHER, COMPLETELY DEFINE THIS PRODUCT.

APPROVED 5-29-43 REVISED

PROCUREMENT SPECIFICATION	ARMY-NAVY AERONAUTICAL STANDARD	AN5853
AN-C-96	COLLIMATOR - SEXTANT	

ARMY AIR FORCES STOCK CLASSIFICATION 05-A

NOTE: This drawing was approved by joint action of the War and Navy Departments as the Army-Navy standard for this product. This drawing supersedes all antecedent standard drawings for the same product and shall become effective for the procurement of aeronautical supplies, or for use in new design, not later than six months after the latest date of approval shown. It may be put into effect, however, at an earlier date after promulgation.

Source: https://assist.dla.mil -- Downloaded: 2026-10-26T14:21Z
Check the source to verify that this is the current version before use.