FED. SUP CLASS
3455

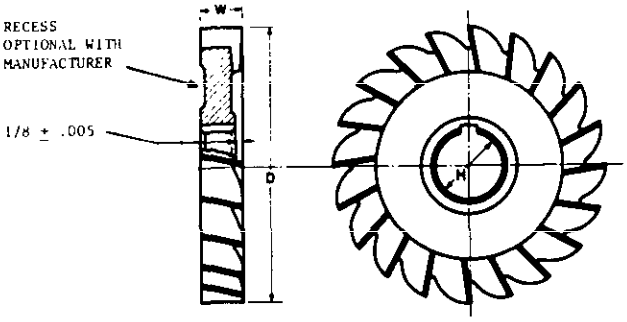

RH AND LH CUTTERS ARE STANDARD

RH CUTTER SHOWN

DASH NO.	DIAMETER OF CUTTER (D) NOMINAL	WIDTH (W) NOMINAL	DIAMETER OF HOLE (H) NOMINAL	HAND OF ROTATION
	INCHES	INCHES	INCHES	
1	4	3/4	1-1/4	LH
2	4	3/4	1-1/4	RH
3	5	3/4	1-1/4	LH
4	5	3/4	1-1/4	RH
5	6	3/4	1-1/4	LH
6	6	3/4	1-1/4	RH
7	6	1	1-1/2	LH
8	6	1	1-1/2	RH
9	7	3/4	1-1/2	LH
10	7	3/4	1-1/2	RH
11	8	3/4	1-1/2	LH
12	8	3/4	1-1/2	RH
*13	8	1	1-1/2	LH
*14	8	1	1-1/2	RH

*Dash numbers 13 and 14 are INACTIVE

NOTES:

1. TYPE, CLASS: Milling cutters shall conform to type II, class 2 of Specification GGG-C-755.
2. PART NUMBER: The MS part number consists of the MS number, plus the dash number. Example: MS15690-6.
3. Referenced documents shall be of the issue in effect on date of invitation for bid.
4. For design feature purposes, this standard takes precedence over procurement documents referenced herein.

Ⓒ **CANCELED** after 31 March 1981. For procurement use American National Standards Institute ANSI B94.19.

REVIEWER: GS

This military standard is approved for use by all Departments and Agencies of the Department of Defense. Selection for all new engineering and design applications and for repetitive use shall be made from this document.

APPROVED 27 SEP 1954 REVISED (A) 9 APR 1957 (B) 2 DEC 1974 (C) 31 Mar 81

P.A. WC Other Cust 84	TITLE **CUTTERS, MILLING, HALF-SIDE**	**MILITARY STANDARD** **MS 15690**
PROCUREMENT SPECIFICATION GGG-C-755	SUPERSEDES:	SHEET 1 OF 1

DD FORM 1 SEP 67 672-1 (Coordinated)

PREVIOUS EDITIONS OF THIS FORM ARE OBSOLETE.

Project No. 3455-0064

☆U.S. GOVERNMENT PRINTING OFFICE: 1981 — 703-023/2054

Source: https://assist.dla.mil -- Downloaded: 2026-10-23T13:50Z
Check the source to verify that this is the current version before use.