FED. SUP CLASS
5930

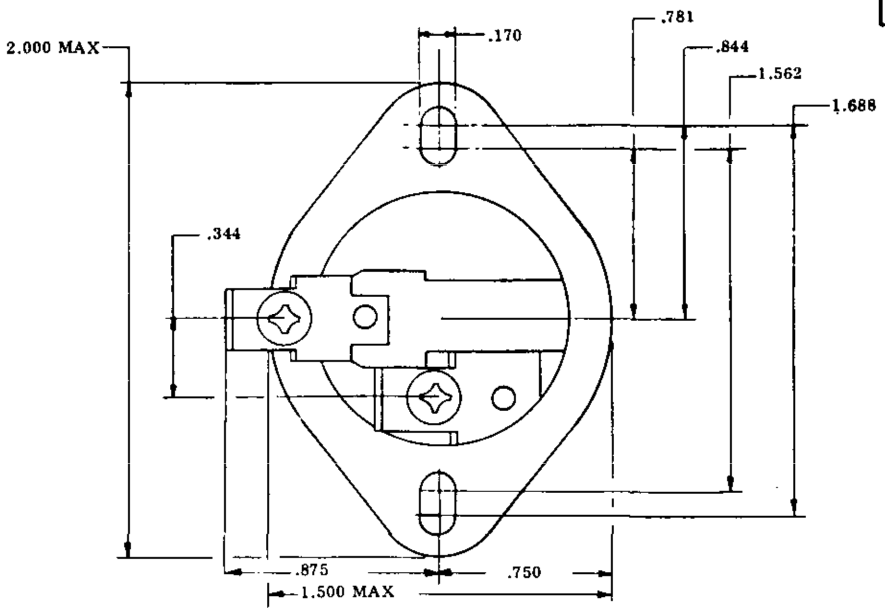

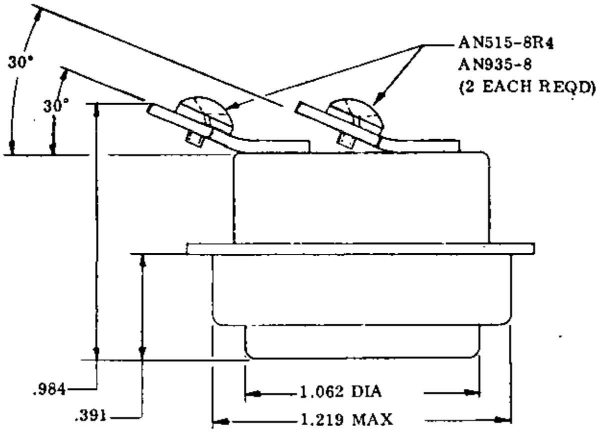

DASH NO.	TEMPERATURE		TOLERANCE
	OPEN	CLOSE	
-1	77°C	66°C	2.8°C
-2	24°C	13°C	3.3°C

NOTES:

1. LIFE: 100,000 CYCLES (MIN).
2. MAXIMUM TEMPERATURE 177°C.
3. CALIBRATION OF TEMPERATURE, -6.7°C MINIMUM MEAN TEMPERATURE DIFFERENCE.
4. RESISTIVE HEATER LOAD 3000 WATTS, 120 VAC: 6000 WATTS 240 VAC.
5. CASE AND COMPONENT PARTS TO BE CORROSION RESISTANT OR SUITABLY PLATED TO RESIST CORROSION.
6. DIMENSIONS IN INCHES UNLESS OTHERWISE SPECIFIED. TOLERANCES: DECIMALS +.016, ANGLES ±5°.

Ⓑ CANCELED AFTER 28 FEBRUARY 1986 NO SUPERSEDING STANDARD

FOR DESIGN FEATURE PURPOSES, THIS STANDARD TAKES PRECEDENCE OVER PROCUREMENT DOCUMENTS REFERENCED HEREIN.

REFERENCE DOCUMENTS SHALL BE OF THE ISSUE ON EFFECT ON DATE OF INVITATIONS FOR BID.

Ⓑ DENOTES CHANGES

APPROVED 22 Oct. 1963 REVISED Ⓐ 18 JUNE 1964 Ⓑ 28 FEBRUARY 1986

P.A. Navy-Weps Other Cust	TITLE SWITCH, THERMOSTATIC, SINGLE POLE, SINGLE THROW, ELECTRICAL	MILITARY STANDARD MS18110(Weps)
PROCUREMENT SPECIFICATION None	SUPERSEDES: BuOrd Dwg. No. 2153627	SHEET 1 OF 1

AMSC N/A

DISTRIBUTION STATEMENT A. Approved for public release; distribution is unlimited.

This standard has been approved by the BUREAU OF NAVAL WEAPONS Department of the NAVY and is mandatory for use by that activity. All other military activities are required to employ this standard where suitable.

Source: https://assist.dla.mil -- Downloaded: 2026-10-23T14:04Z
Check the source to verify that this is the current version before use.

Project No. 5930-M615-01