FED. SUP CLASS
4730

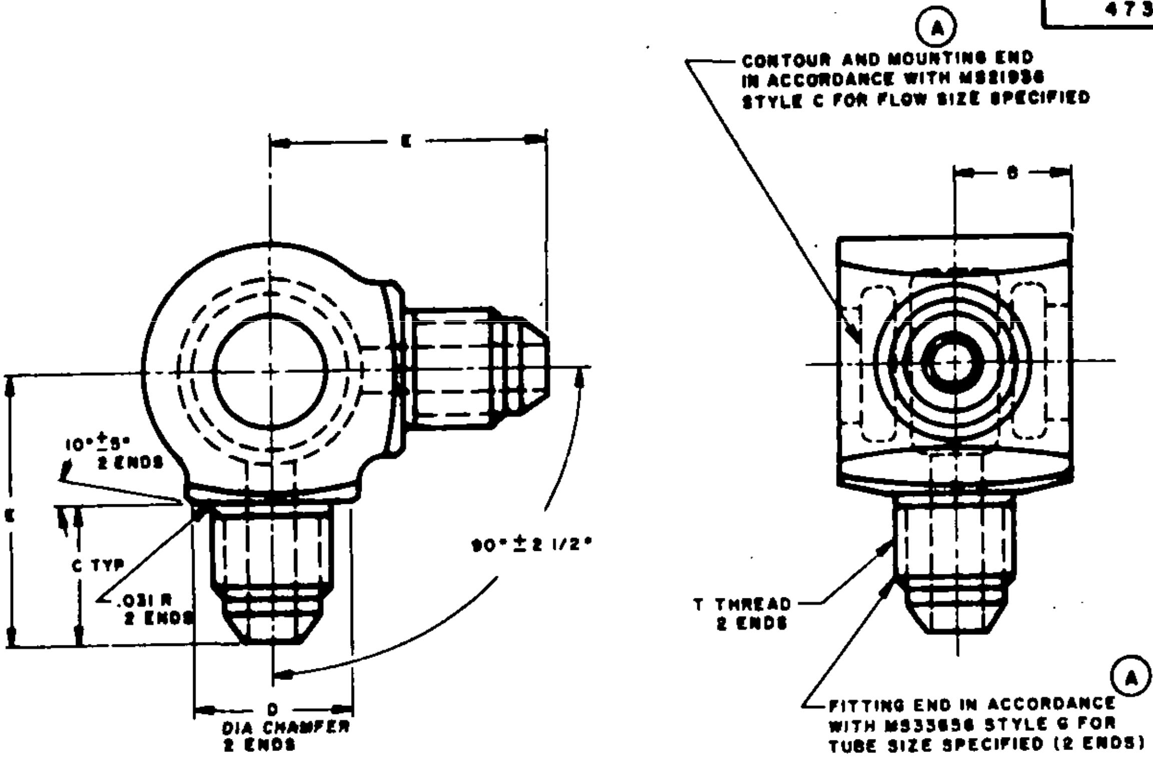
Ⓐ CONTOUR AND MOUNTING END IN ACCORDANCE WITH MS21936 STYLE C FOR FLOW SIZE SPECIFIED
E
B
10° ± 5° 2 ENDS
E
C TYP
.031 R 2 ENDS
90° ± 2 1/2°
D DIA CHAMFER 2 ENDS
T THREAD 2 ENDS
FITTING END IN ACCORDANCE WITH MS33656 STYLE G FOR TUBE SIZE SPECIFIED (2 ENDS) Ⓐ

LOW FLOW SIZE MS PART NUMBER	TUBE OD	THREAD T (REF)	B	C	D	E
MS 21954–3L	3/16	3/8-24 UNF-3A	.500	.540	.710	1.109
MS 21954–4L	1/4	7/16-20 UNF-3A	.500	.625	.710	1.187
MS 21954–5L	5/16	1/2-20 UNF-3A	.500	.625	.710	1.187
MS 21954–6L	3/8	9/16-18 UNF-3A	.500	.640	.710	1.203

HIGH FLOW SIZE MS PART NUMBER	TUBE OD	THREAD T (REF)	B	C	D	E
MS 21954–4H	1/4	7/16-20 UNF-3A	.594	.628	.710	1.438
MS 21954–5H	5/16	1/2-20 UNF-3A	.594	.628	.710	1.438
MS 21954–6H	3/8	9/16-18 UNF-3A	.594	.648	.710	1.460
MS 21954–8H	1/2	3/4-16 UNF-3A	.594	.750	.750	1.562

Ⓐ MATERIAL: EXTRUSION 24S ALUMINUM ALLOY SPECIFICATION QQ-A-200/3 TEMPER T4 OR TEMPER T4 ARTIFICIALLY AGED. FORGING 14S ALUMINUM ALLOY SPECIFICATION QQ-A-367 COMPOSITION 5 TEMPER T6.

FINISH: SEE PROCUREMENT SPECIFICATION.

ALL MACHINED SURFACES FINISHED TO 250 R.M.S. MAX. EXCEPT AS NOTED.
FITTINGS SHALL BE FREE FROM ALL HANGING BURRS AND SLIVERS WHICH MIGHT BECOME DISLODGED UNDER USAGE.
DIMENSIONS IN INCHES: UNLESS OTHERWISE SPECIFIED, TOLERANCES: DECIMALS ± .010, ANGLES ± 1/2°.
INSTALL PER MS 21921

Ⓐ FOR DESIGN FEATURE PURPOSES, THIS STANDARD TAKES PRECEDENCE OVER PROCUREMENT DOCUMENTS REFERENCED HEREIN. REFERENCED DOCUMENTS SHALL BE OF THE ISSUE IN EFFECT ON DATE OF INVITATIONS FOR BID.

This military standard is approved for use by all Departments and Agencies of the Department of Defense. Selection for all new engineering and design application and for repetitive use shall be made from this document.

Review activities
ARMY — MI
DSA — CS

User activities:

APPROVED 15 FEB 1956 REVISED Ⓐ 16 MAY 1975

P.A. USAF – 82 Other Cust	TITLE BODY CLUSTER FITTING TWO WAY 90° — FLARE	MILITARY STANDARD MS 21954
PROCUREMENT SPECIFICATION MIL-F-5509	SUPERSEDES:	SHEET 1 OF 1

DD FORM 1 SEP 59 672-1 (Coordinated)

PREVIOUS EDITIONS OF THIS FORM ARE OBSOLETE.

Source: https://assist.dla.mil -- Downloaded: 2026-10-23T14:42Z
Check the source to verify that this is the current version before use.